Form No. 3434-540 Rev A

TORO®

Count on it.

Parts Catalog

46cm Lawn Mower

Model No. 20944—Serial No. 320000001 and Up

Register at www.Toro.com.
Original Instructions (EN)

CE



Ordering Replacement Parts

To order replacement parts, please supply the part number, the quantity, and the description of each part desired.

Understanding Reference Numbers

Each identified part in an illustration has a reference number. The reference number for a part also appears in the parts list, along with other information about the part.

This catalog uses two special reference number formats, one to indicate parts in a service assembly and another to indicate the quantity of a given part in an illustration.

Service Assembly Reference Numbers

Parts in service assemblies have reference numbers in the form a:b. The a represents the reference number of the entire service assembly and the b represents a sequential number unique to each part within the service assembly.

For example, a wheel assembly might be identified by reference number 6, the tire by 6:1, the valve by 6:2, and the wheel by 6:3. When you order the assembly identified by reference number 6, you receive all parts identified by reference numbers 6:1,6:2, and 6:3. However, you may also order any part individually. Reference numbers of this type appear in illustration and in parts lists.

Reference Numbers Indicating Quantity

In an illustration, if a reference number indicates more than one part, the reference number has the form nX y. The n represents the quantity of the part, the X is the multiplication symbol, and the y represents the reference number.

For example, in an illustration, the reference number 2X 37 means that two of the parts identified by reference number 37 are indicated.

Contents

Deck and Bag Assembly 4
Engine and Blade Assembly 6
Suspension and Wheel Assembly 8
Handle Assembly 10

© 2019—The Toro® Company
8111 Lyndale Avenue South
Bloomington, MN 55420

Contact us at www.Toro.com.
Printed in the USA.
All Rights Reserved

Deck and Bag Assembly

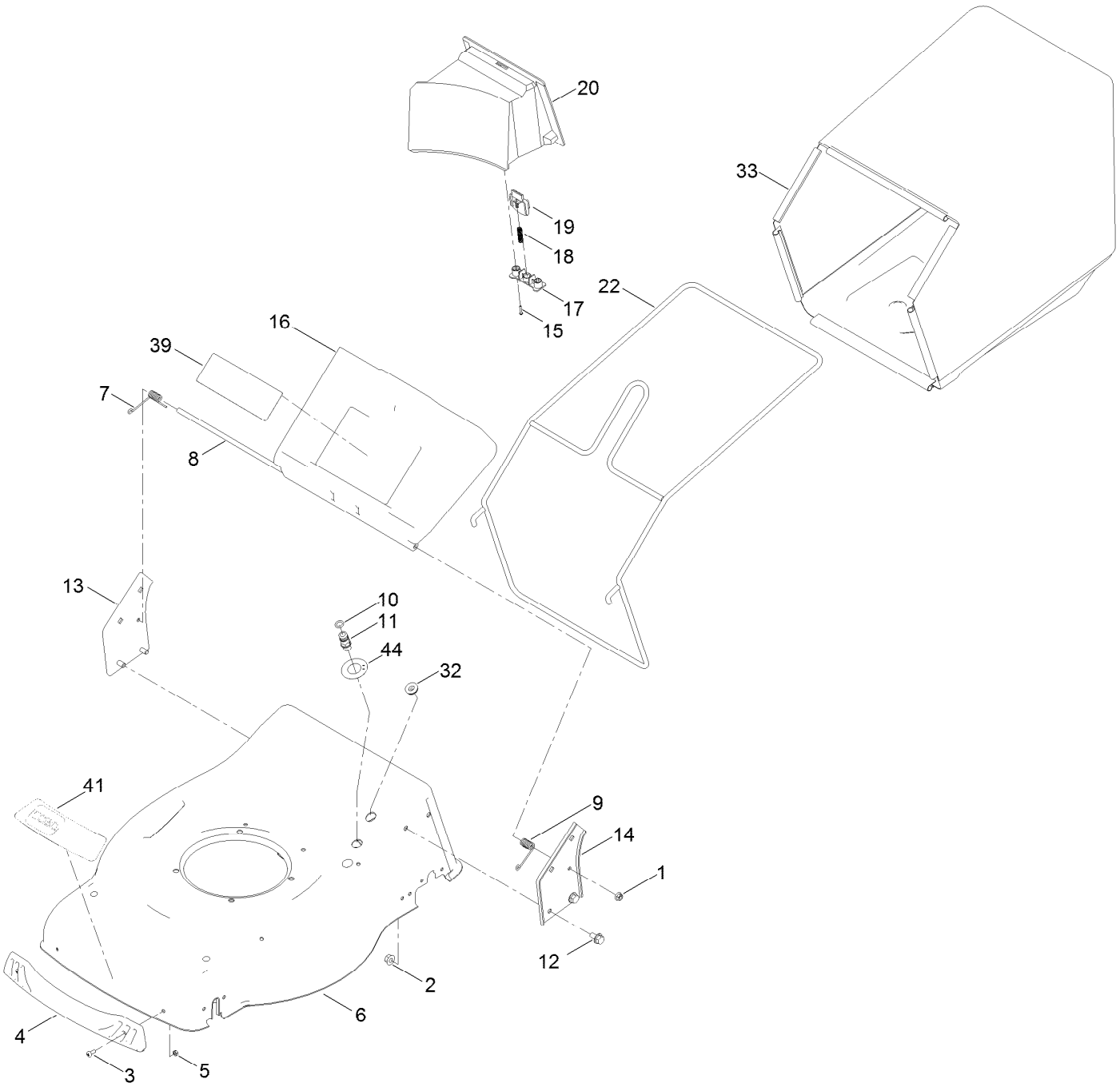

Deck and Bag Assembly (continued)

Ref.	Part Number	Qty.	Description
1	134-0117	2	Nut-Lock, Flange
2	134-0118	4	Nut-Lock, Flange
3	134-0119	2	Screw-Tooth
4	134-0120	1	Bumper-Front
5	134-0121	2	Nut-Lock
6	134-0122	1	Deck
7	134-0123	1	Spring-Twist, RH
8	134-0124	1	Rod-Spring, Rear Deflector
9	134-0125	1	Spring-Twist, LH
10	134-0126	1	O-Ring
11	134-0127	1	Port-Wash
12	134-0128	4	Bolt-HH, Flange
13	134-0129	1	Bracket-Handle, RH
14	134-0130	1	Bracket-Handle, LH
15	134-0131	2	Screw-Self Driving
16	134-0132	1	Deflector-Rear
17	134-0133	1	Pressing Board-Lock Button, Mulch
18	134-0134	1	Spring-Button, Mulch
19	134-0135	1	Lock-Button, Mulch
20	134-0136	1	Plug-Mulch
22	134-0138	1	Frame-Bag, Grass
32	134-0148	1	Sheath-Cable, Protective
33	134-0149	1	Bag-Grass
39	134-0084	1	Decal-Safety
41	134-0060	1	Decal-Shroud
44	134-3615	1	Decal-Port, Washout

Engine and Blade Assembly

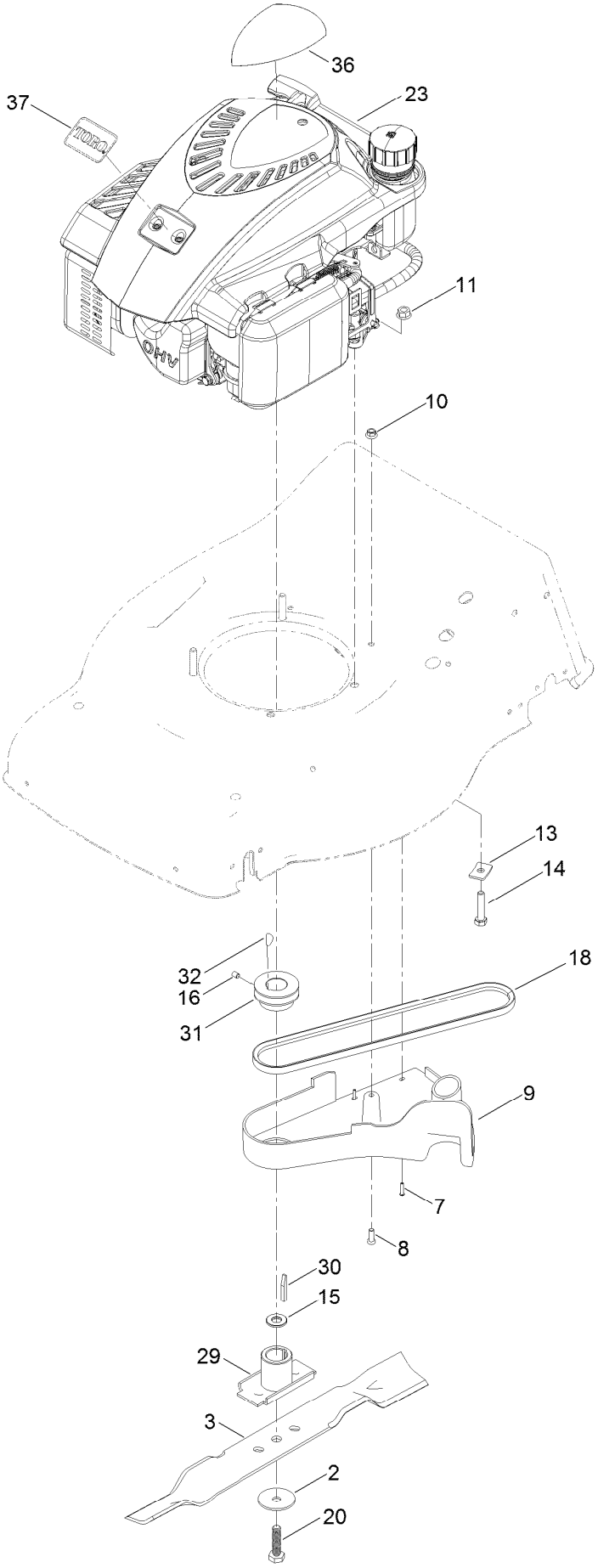

Engine and Blade Assembly (continued)

Ref.	Part Number	Qty.	Description
2	134-2016	1	Washer-Dished
3	134-0073	1	Blade-Mulch
7	134-0155	2	Screw-Self Driving
8	134-0156	1	Screw-Tooth
9	134-0157	1	Cover-Pulley, Belt
10	134-0117	1	Nut-Lock, Flange
11	134-0118	3	Nut-Lock, Flange
13	134-0158	3	Washer-Square
14	134-2011	3	Bolt-Blade
15	134-0160	1	Sheath-Blade
16	134-0161	1	Screw-Grub
18	134-0163	1	Belt-Triangle
20	134-0164	1	Bolt-Blade
23	139-0607	1	Engine-1P65Fc
29	134-0171	1	Support-Blade
30	134-0172	1	Key-Flat
31	134-0173	1	Pulley-Drive
32	134-0174	1	Key-Woodruff
36	120-1938	1	Decal-Shroud
37	134-0420	1	Logo -Toro (3-In-1 Models)

Suspension and Wheel Assembly

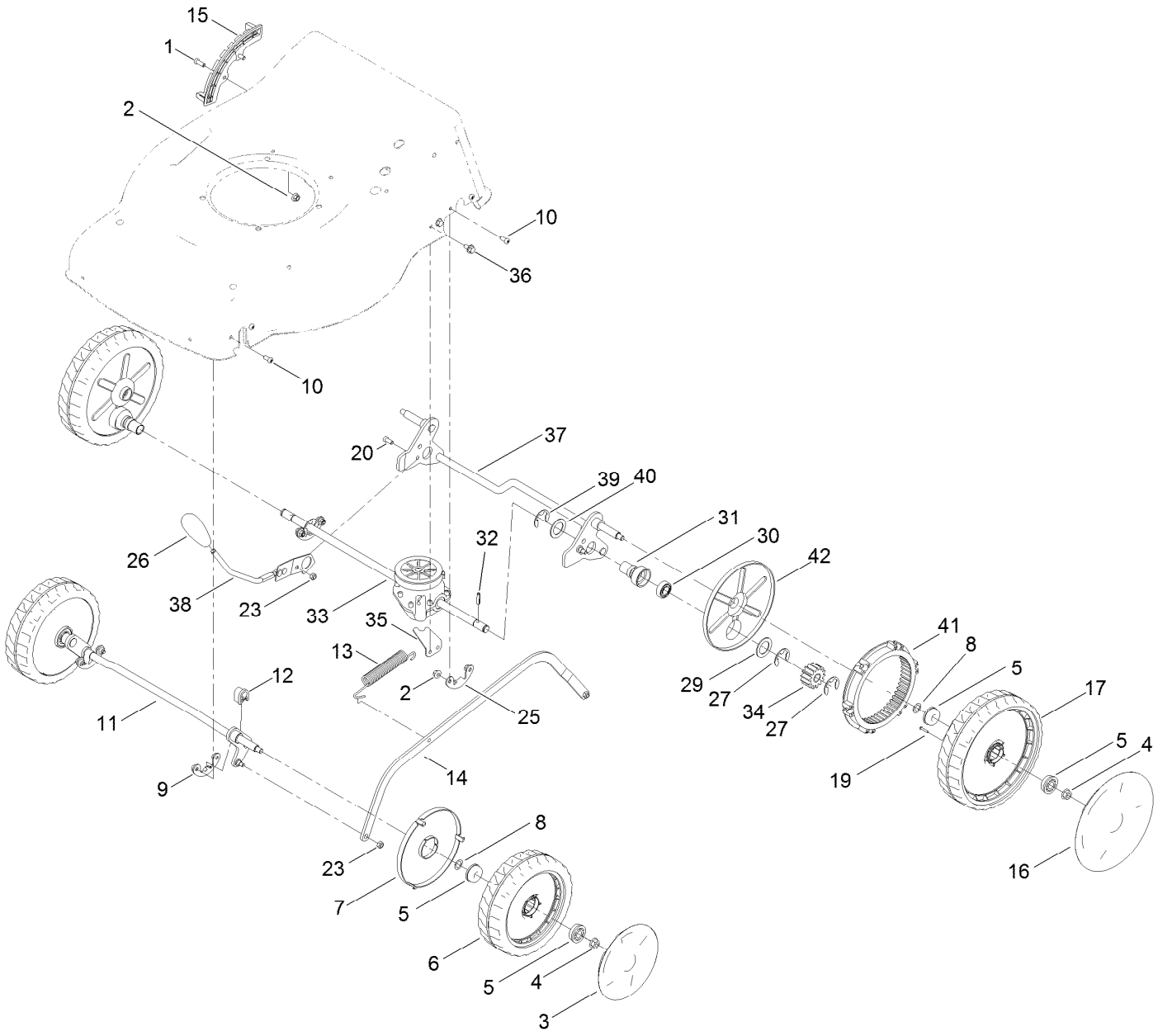

Suspension and Wheel Assembly (continued)

Ref.	Part Number	Qty.	Description
1	134-0156	2	Screw-Tooth
2	134-0117	6	Nut-Lock, Flange
3	134-0175	2	Cap-Hub (7)
4	134-0118	4	Nut-Lock, Flange
5	134-0176	8	Bearing
6	134-0177	2	Wheel ASM (7)
7	134-0178	2	Cover-Wheel, Dustproof
8	134-0179	4	Washer-Wave
9	134-0180	2	Clamp-Axle, Fixed
10	134-0181	8	Screw-Tooth
11	134-0182	1	Front Wheel Axis ASM
12	134-0183	2	Ring-Fixed
13	134-0184	1	Spring-Tension
14	134-0185	1	Bracket-Connecting, HOC
15	134-0186	1	Board-Adjuster, HOC
16	134-0187	2	Cap-Hub (8)
17	134-0188	2	Wheel ASM (8)
19	134-0131	6	Screw-Self Driving
20	134-0189	1	Screw-Pan, Cross
23	134-0190	3	Nut-Lock
25	134-0191	2	Ring-Fixed
26	134-0192	1	Handle-Lever, HOC
27	134-0197	4	Washer-Spring
28	134-0198	1	Gear Output ASM-RH ●
29	134-0199	2	Washer-Flat
30	134-0200	2	Bearing
31	134-0201	2	Sheath-Bearing
32	134-0202	2	Pin-Cynlindrical
33	134-0203	1	Gearbox
34	134-0204	1	Gear Output ASM-LH
35	134-0205	1	Bracket-Location
36	134-0206	2	Bolt-HH, Flange
37	134-0207	1	Rear Axle Shaft ASM
38	134-0208	1	Handle ASM
39	134-0209	2	Washer-Spring
40	134-0210	1	Washer
41	134-0211	2	Gear Ring
42	134-0212	2	Cover-Wheel, Dustproof

● Not illustrated

Handle Assembly

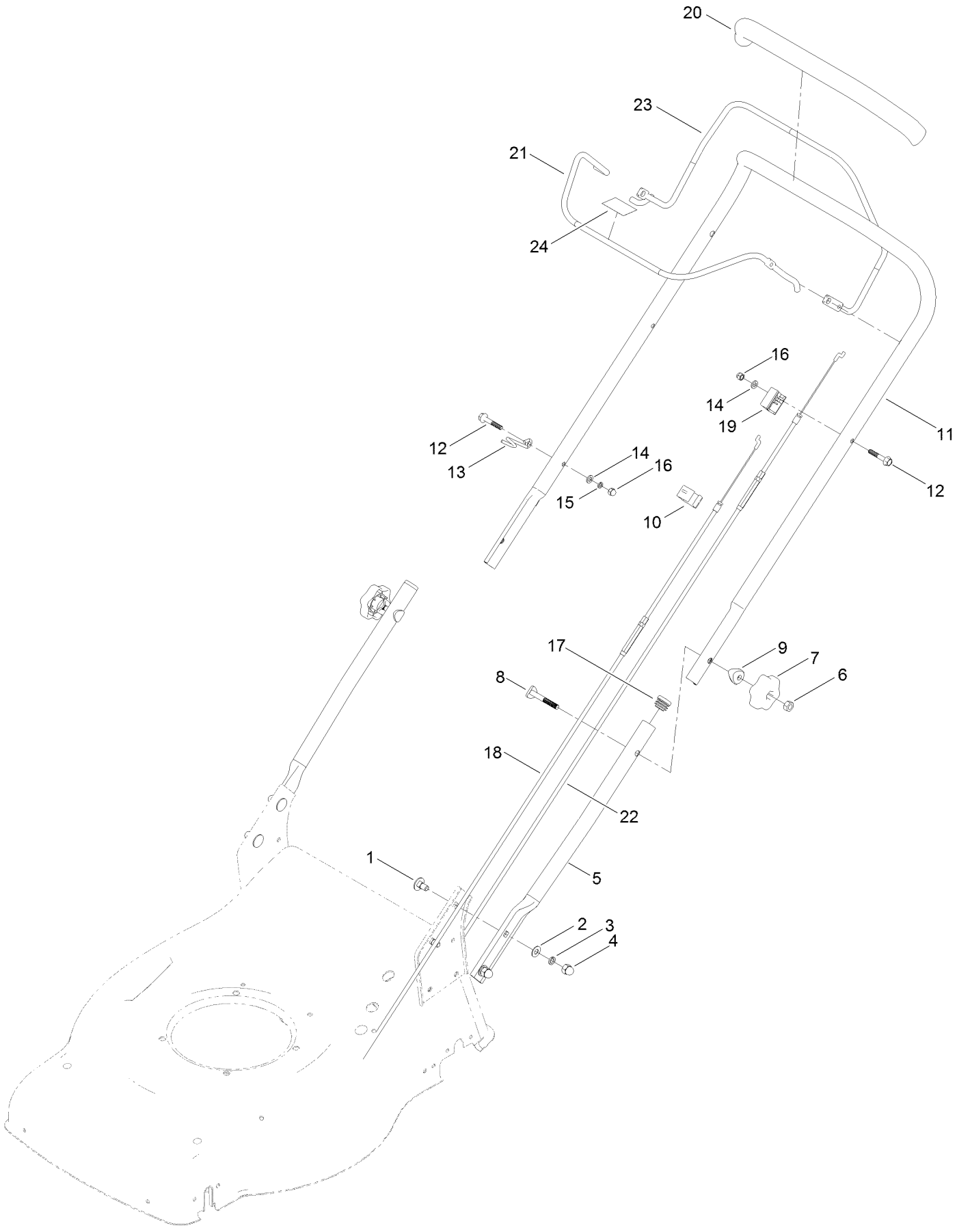

Handle Assembly (continued)

Ref.	Part Number	Qty.	Description
1	134-0219	4	Bolt
2	09475	4	Washer
3	03469	4	Washer-Spring
4	134-0222	4	Nut-Lid
5	134-0223	2	Handlebar-Lower
6	134-0224	2	Nut-Hex
7	134-0225	2	Knob-Rotary
8	134-0226	2	Bolt-Flat Head
9	134-0227	2	Washer-Curve
10	134-0228	1	Cable Clamp
11	134-0229	1	Handlebar-Upper
12	134-0230	2	Bolt-HH, Flange
13	134-0231	1	Hook-Cable
14	09472	2	Washer-Plain
15	09474	1	Washer-Spring
16	134-0234	2	Nut-Lid
17	134-0235	2	Plug-Tube
18	134-0236	1	Cable-Brake, Engine
19	134-0237	1	Cable-Block, Fixed
20	134-0238	1	Grip-Handle
21	134-0239	1	Lever-Engine
22	134-0240	1	Cable-Clutch
23	134-0241	1	Lever-Clutch, Gearbox
24	H295159	1	Decal-Stop



Count on it.