Form No. 3431-293 Rev B

TORO®

Count on it.

Parts Catalog

GreensPro® 1260

Greens Roller

Model No. 44913—Serial No. 403368062 and Up

Register at www.Toro.com.
Original Instructions (EN)

CE

3431-293 B

Ordering Replacement Parts

To order replacement parts, please supply the part number, the quantity, and the description of each part desired.

Understanding Reference Numbers

Each identified part in an illustration has a reference number. The reference number for a part also appears in the parts list, along with other information about the part.

This catalog uses two special reference number formats, one to indicate parts in a service assembly and another to indicate the quantity of a given part in an illustration.

Service Assembly Reference Numbers

Parts in service assemblies have reference numbers in the form a:b. The a represents the reference number of the entire service assembly and the b represents a sequential number unique to each part within the service assembly.

For example, a wheel assembly might be identified by reference number 6, the tire by 6:1, the valve by 6:2, and the wheel by 6:3. When you order the assembly identified by reference number 6, you receive all parts identified by reference numbers 6:1,6:2, and 6:3. However, you may also order any part individually. Reference numbers of this type appear in illustration and in parts lists.

Reference Numbers Indicating Quantity

In an illustration, if a reference number indicates more than one part, the reference number has the form nX y. The n represents the quantity of the part, the X is the multiplication symbol, and the y represents the reference number.

For example, in an illustration, the reference number 2X 37 means that two of the parts identified by reference number 37 are indicated.

Contents

Steering Assembly 4
Roller Chassis Assembly No. 133-1720 6
Complete Long Steering Roller Assembly No. 127-7958 8
Complete Short Steering Roller Assembly No. 127-7963 9
Oil Tank and Hose Assembly 10
Roller Drive Assembly 12
Hydraulic Motor Assembly No. 131-6431 14
Engine Assembly 16
Tire Assembly 18
Lifting Mechanism Assembly 20
Seat Assembly 22
Steering Wheel Assembly 24
Parking Brake Assembly 26
Control Assembly 28
Hydraulic Pump Assembly No. 132-4797 30
Cylinder Head Assembly 32
Cylinder Barrel Assembly 34
Crankcase Cover Assembly 36
Crankshaft Assembly 38
Piston and Connecting Rod Assembly 40
Camshaft Assembly 42
Recoil Starter Assembly 44
Fan Cover Assembly 46
Carburetor Assembly 48
Air Cleaner Assembly 50
Muffler Assembly 52
Fuel Tank Assembly 54
Flywheel Assembly 56
Ignition Coil Assembly 58
Control Assembly 60
Label Assembly 62
Wrench 64
Decal Assembly 66
Gasket Kit 68
Attachments and Accessories 70

© 2019—The Toro® Company
8111 Lyndale Avenue South
Bloomington, MN 55420

Contact us at www.Toro.com.
Printed in the USA.
All Rights Reserved

Steering Assembly

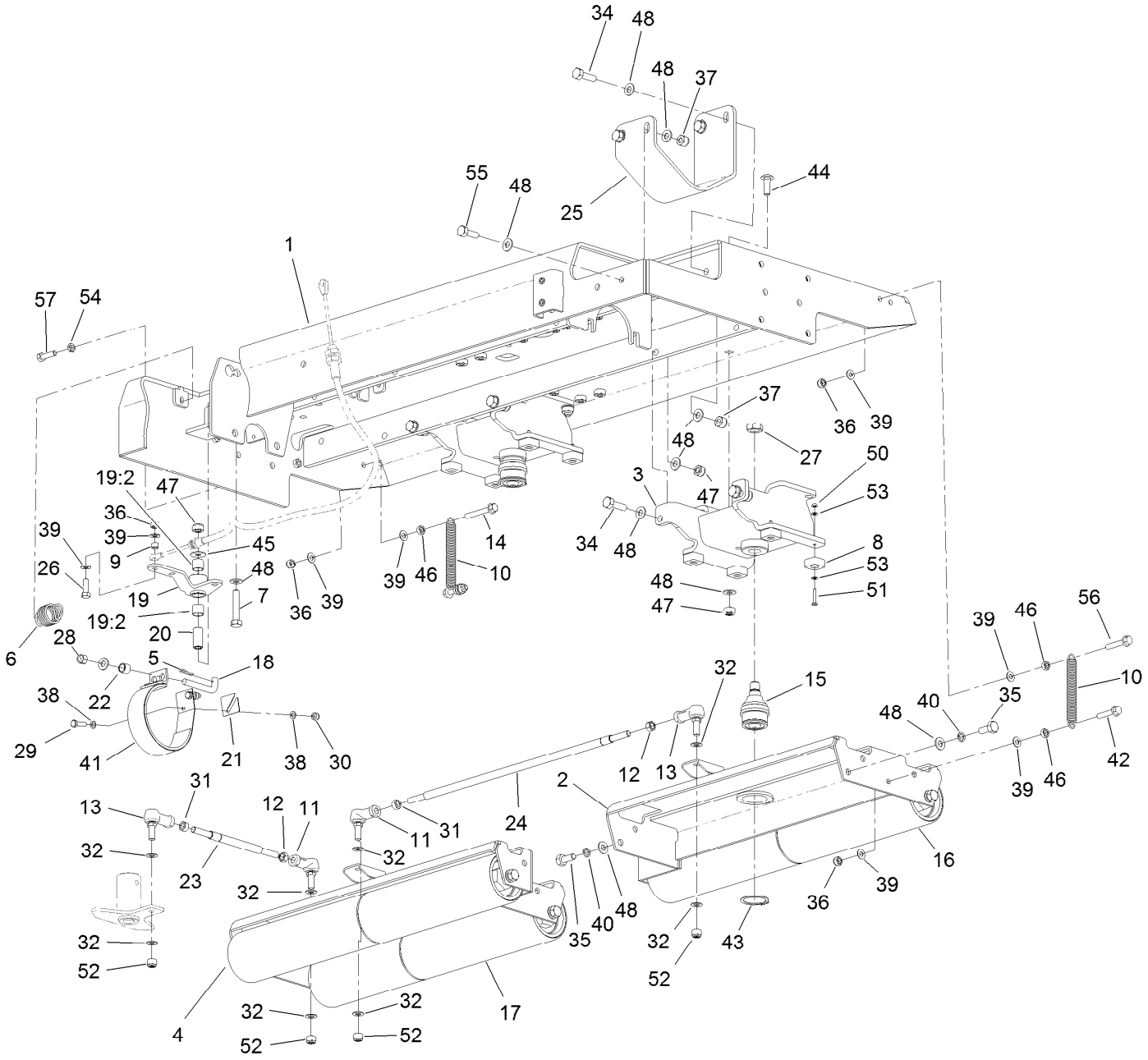

Steering Assembly (continued)

Ref.	Part Number	Qty.	Description
1	133-1720	1	Chassis-Roller
2	132-4756-01	1	Head-Steering, Rear
3	132-4764-01	2	Support-Roller
4	132-7082-01	1	Head-Steering, Front
5	1-806003	1	Pin-Cotter
6	13-3090	1	Spring-Finger
7	57-6360	1	Screw-Clutch
8	94-1392	8	Pad-Rubber
9	108-7983	1	Bushing-Cable
10	136-6163	2	Spring
11	132-9263	2	Ball Joint
12	111-5855	2	Nut-Hex, LH
13	132-9264	2	Joint-Ball
14	33104-060	1	Screw-HHF
15	121-3605	2	Ball Joint
16	127-7958	2	Complete Long Steering Roller ASM
17	127-7963	2	Complete Short Steering Roller ASM
18	131-1584	1	Rod-Brake
19	136-6249	1	Brake Pivot ASM
19:2	256-311	2	Bushing-Split
20	131-6350	1	Bushing-Pivot
21	131-6353	1	Shim
22	131-6367	1	Spacer
23	132-7085	1	Rod-Pivot, Steering
24	132-7087	1	Rod-Pivot, Steering
25	132-7096-03	1	Guard-Motor
26	03162	1	Screw-HH
27	3220-6	2	Nut-Jam
28	3296-39	1	Nut-Lock, NI
29	09044	2	Screw-Set
30	09201	2	Nut
31	09213	2	Nut
32	09271	8	Washer-Plain
34	09394	6	Bolt
35	09395	8	Screw-HH
36	09441	5	Nut-Hex, NI
37	09447	4	Nut
38	09472	4	Washer-Plain
39	09475	10	Washer
40	09480	8	Washer-Lock
41	9593	1	Brake Band ASM
42	33104-040	2	Screw-HHF
43	32151-104	2	Ring-Retaining, External
44	33125-030	3	Screw-CARR
45	HY03355	1	Washer-Plated
46	ZNH1H000U	4	Nut-Hex
47	ZNN1J000U	8	Nut-Hex, NI
48	ZWQ1J000U	29	Washer-Plain
50	09746	8	Nut-Lock
51	09806	8	Setscrew
52	09216	4	Nut-Hex, NI
53	ZWP1E000U	16	Washer
54	117-4059	2	Nut-Hex
55	09392	2	Screw-HH
56	33104-045	1	Screw-HHF
57	09369	2	Screw-HH

Roller Chassis Assembly No. 133-1720

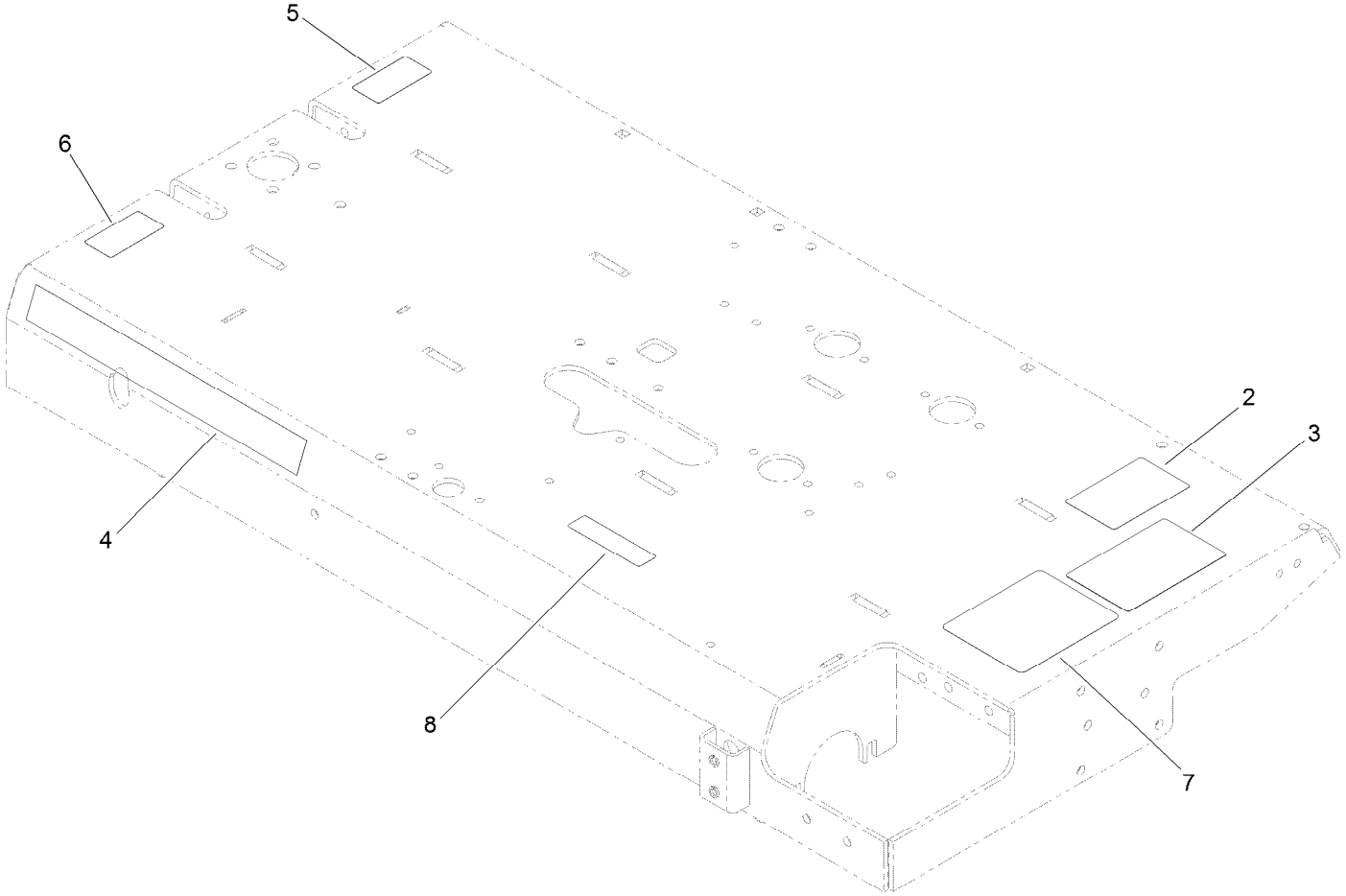

Roller Chassis Assembly No. 133-1720 (continued)

Ref.	Part Number	Qty.	Description
2	133-1701	1	Decal-Warning
3	127-5884	1	Decal-Operation
4	132-9298	2	Decal
5	111-5650	1	Decal-Control, Pedal (RH)
6	111-5649	1	Decal-Control, Pedal (LH)
7	132-9299	1	Decal-Service
8	111-5646	1	Decal-Warning

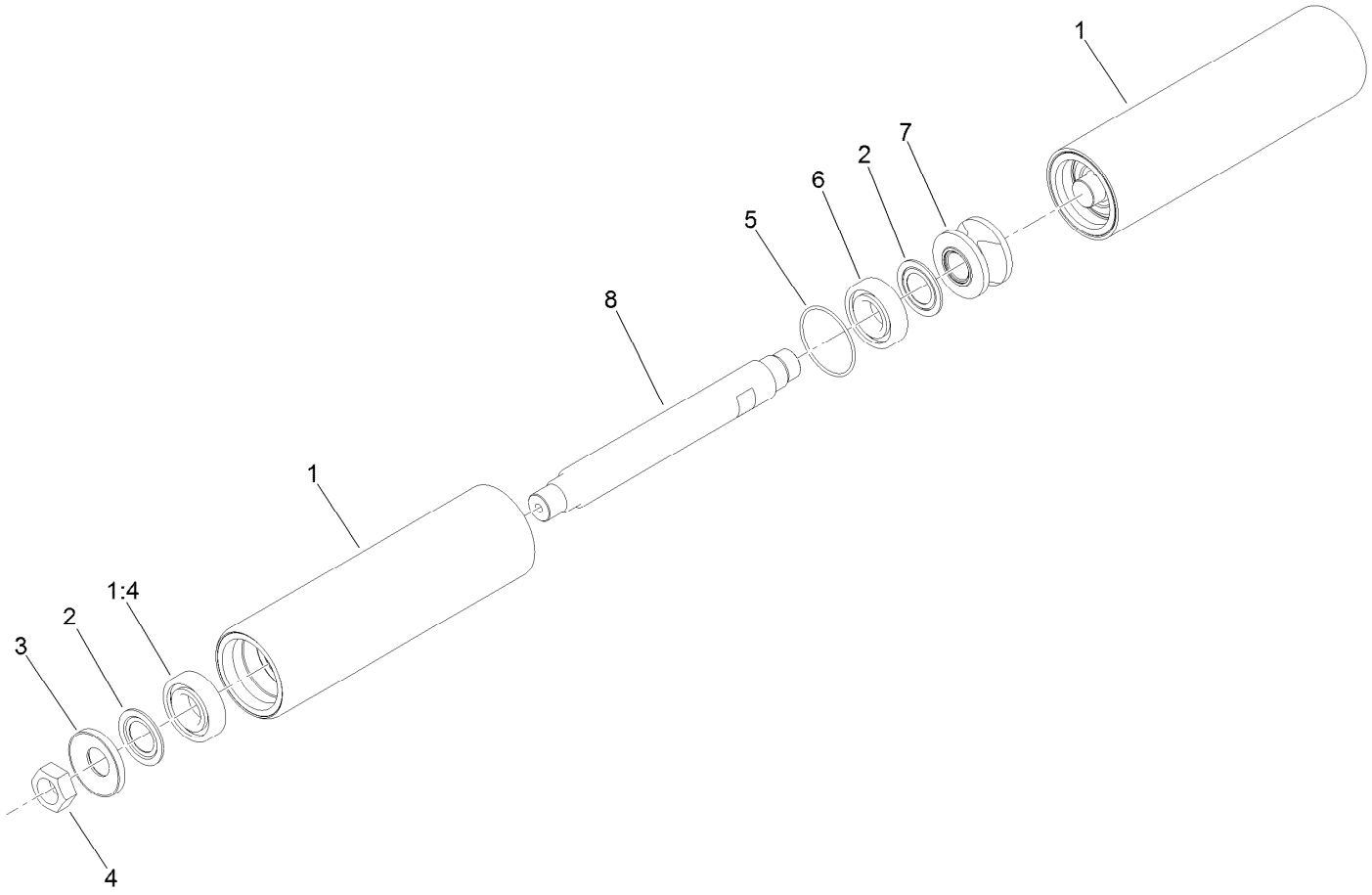

Complete Long Steering Roller Assembly No. 127-7958

Ref.	*Part Number*	*Qty.*	*Description*
1	127-7966	2	Long Steering Roller ASM
1:4	115-3296	1	Bearing-Sealed
2	115-3299	4	Seal-Flocked
3	127-7959	2	Spacer-Bearing
4	3296-49	2	Nut-Lock, NI
5	117-8177	2	O-Ring
6	115-3296	2	Bearing-Sealed
7	127-7960	1	Sleeve-Roller
8	127-8029	2	Shaft-Roller

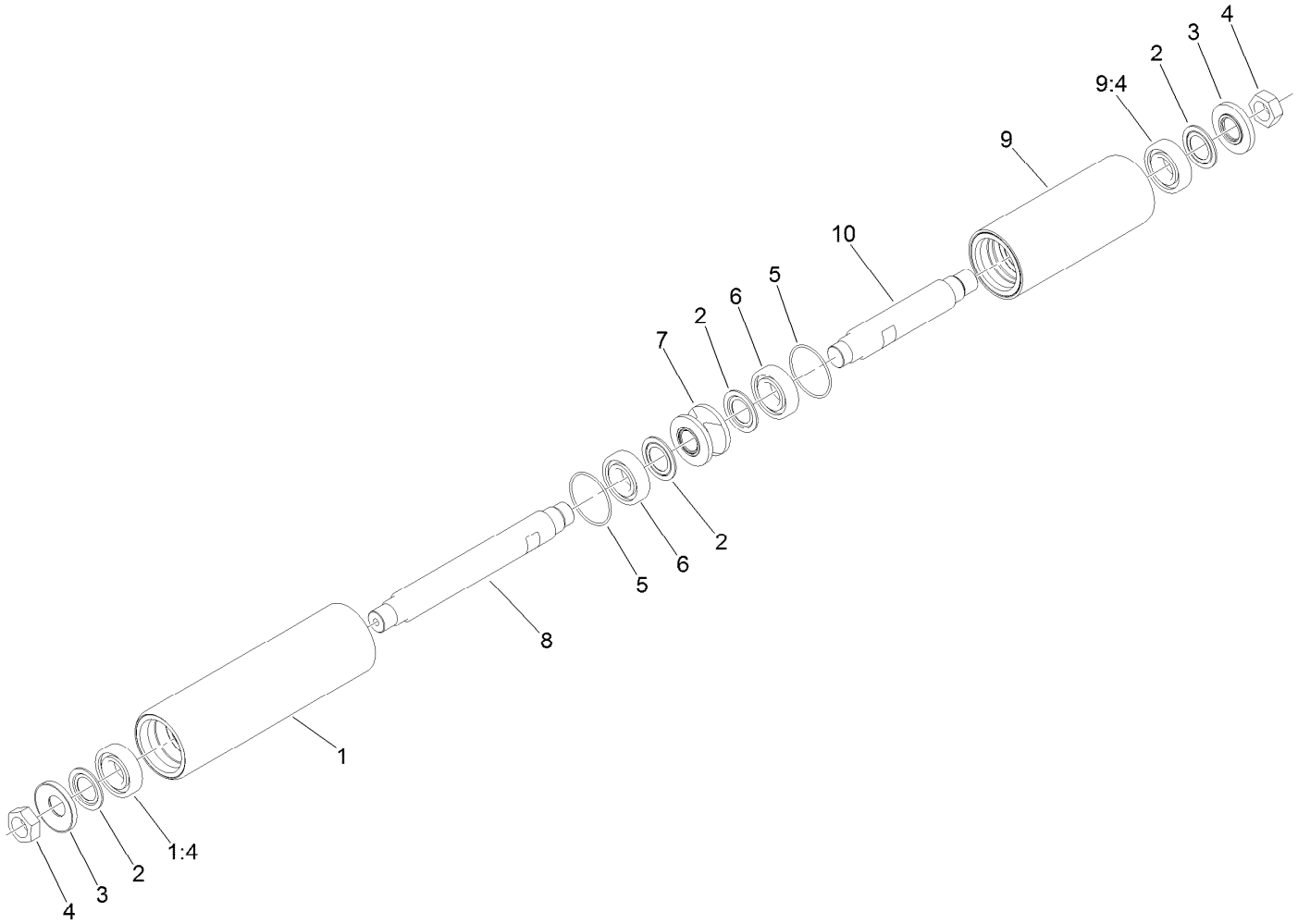

Complete Short Steering Roller Assembly No. 127-7963

Ref.	*Part Number*	*Qty.*	*Description*
1	127-7966	1	Long Steering Roller ASM
1:4	115-3296	1	Bearing-Sealed
2	115-3299	4	Seal-Flocked
3	127-7959	2	Spacer-Bearing
4	3296-49	2	Nut-Lock, NI
5	117-8177	2	O-Ring
6	115-3296	2	Bearing-Sealed
7	127-7960	1	Sleeve-Roller
8	127-8029	1	Shaft-Roller
9	127-7967	1	Short Steering Roller Assy
9:4	115-3296	1	Bearing-Sealed
10	127-8030	1	Shaft-Roller

Oil Tank and Hose Assembly

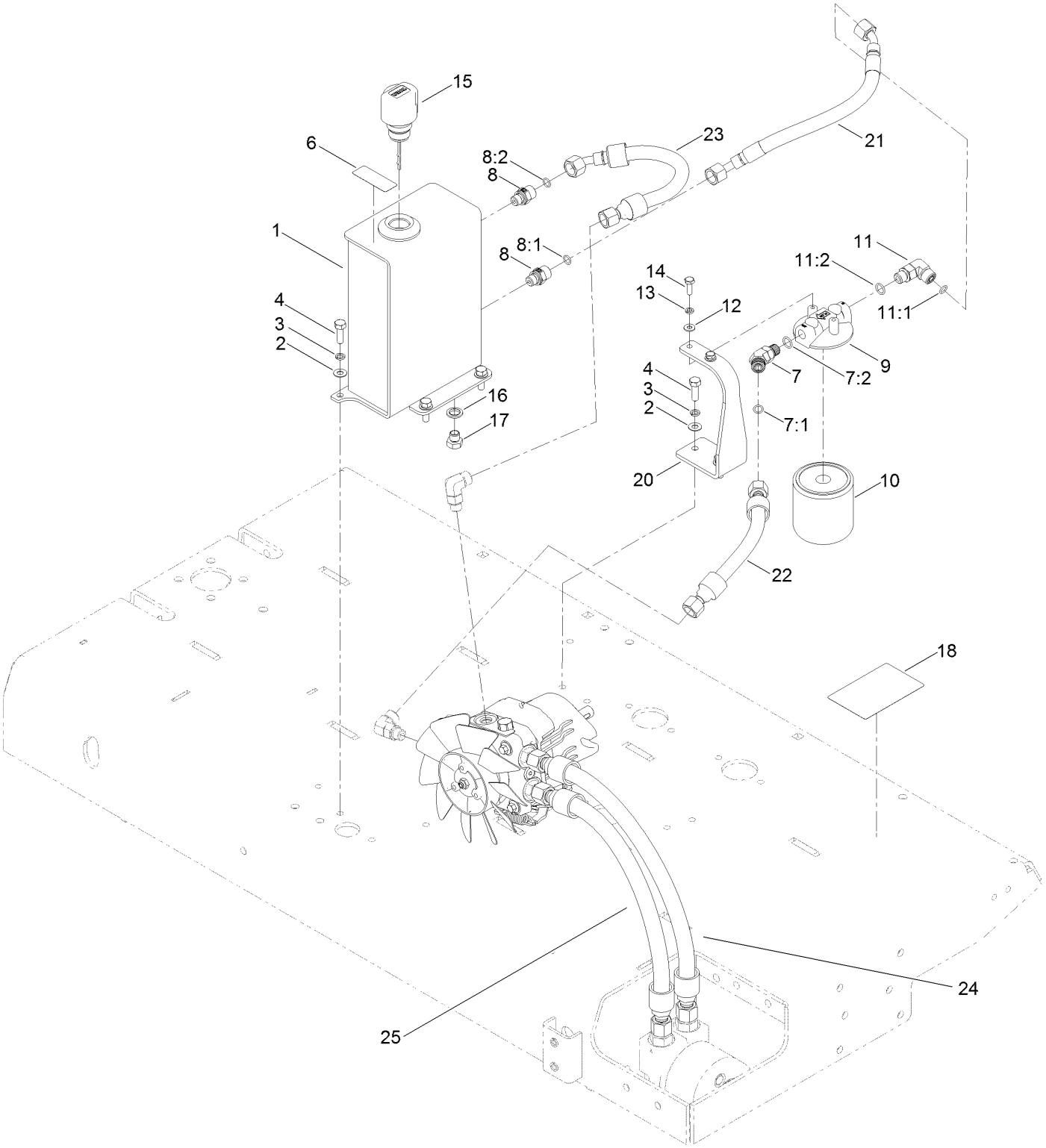

Oil Tank and Hose Assembly (continued)

Ref.	Part Number	Qty.	Description
1	132-9269-01	1	Oil Tank
2	09475	5	Washer
3	03469	5	Washer-Spring
4	03162	5	Screw-HH
6	93-6686	1	Decal-Oil, HYD
7	340-87	1	Fitting-Elbow, 45 DEG
7:1	237-22	1	O-Ring
7:2	237-42	1	O-Ring
8	127-3874	2	Fitting-Straight
8:1	237-22	1	O-Ring
8:2	138-9105	1	Seal
9	104-7836	1	Head-Filter
10	1-633750	1	Filter-Oil, HYD
11	340-77	1	Fitting-Elbow, 90 DEG
11:1	237-22	1	O-Ring
11:2	237-42	1	O-Ring
12	09261	2	Washer-Plain
13	09264	2	Washer-Spring
14	09821	2	Screw-HH
15	132-9292	1	Breather
16	10-06-030	1	Seal-Dowty
17	30-06-200	1	Plug-HYD
18	133-1701	1	Decal-Warning
20	132-9201-01	1	Bracket-Filter
21	132-9204	1	Hose ASM
22	132-9205	1	Hose ASM
23	132-9206	1	Hose ASM
24	132-9202	1	Hose ASM
25	132-9203	1	Hose ASM

Roller Drive Assembly

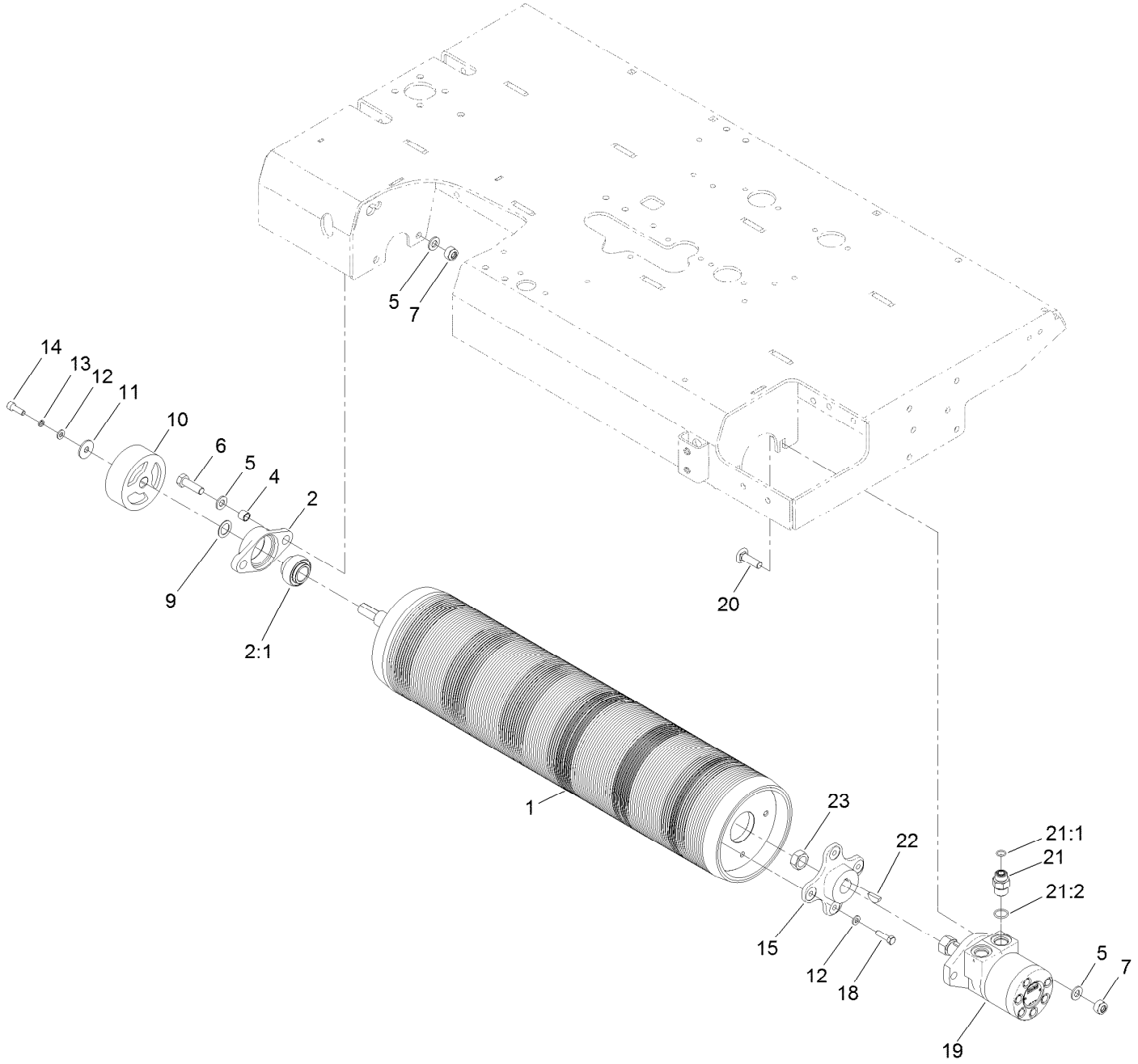

Roller Drive Assembly (continued)

Ref.	Part Number	Qty.	Description
1	132-5380	1	Drive-Drum, Roller
2	111-5744	1	Bearing ASM
2:1	111-5758	1	Bearing
4	131-6367	2	Spacer
5	HY09485	6	Washer-Plain
6	63-11-010	2	Bolt-HH
7	09650	4	Nut-Hex, Nyloc
9	132-9200	1	Spacer
10	106719	1	Drum-Brake
11	93-8806	1	Washer-Hardened
12	ZWP1H000U	5	Washer-Plain

Ref.	Part Number	Qty.	Description
13	03469	1	Washer-Spring
14	ZCS1H025U	1	Screw-HSH
15	133-8863	1	Hub-Drive Roller
18	09369	4	Screw-HH
19	131-6431	1	HYD Traction Motor ASM
20	33126-040	2	Screw-CARR
21	340-6	2	Fitting-Straight
21:1	237-30	1	O-Ring
21:2	237-80	1	O-Ring
22	3257-8	1	Key-Woodruff
23	85-7310	1	Nut-Motor, Wheel

Hydraulic Motor Assembly No. 131-6431

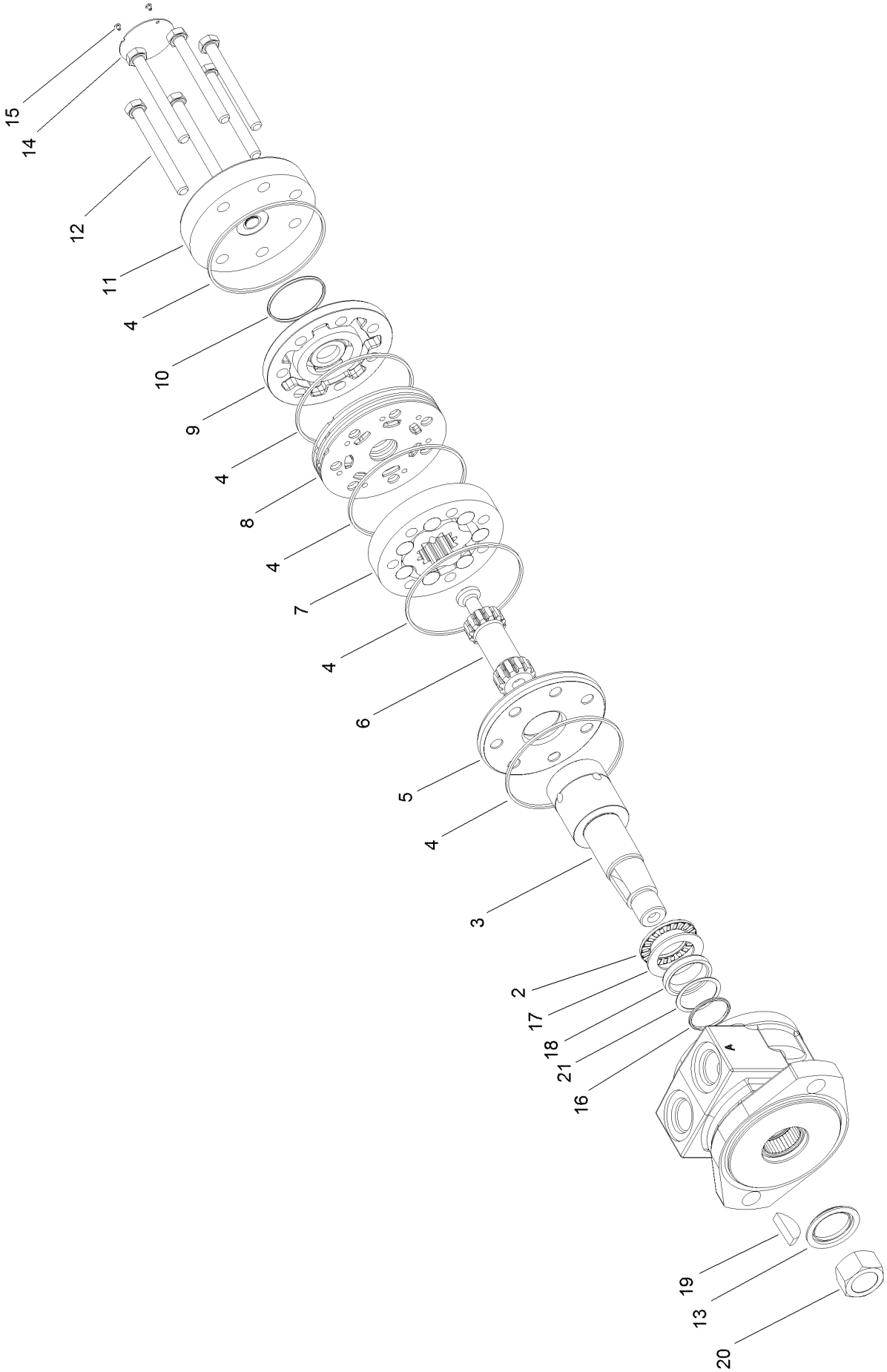

Hydraulic Motor Assembly No. 131-6431 (continued)

Ref.	Part Number	Qty.	Description
2	133-1761	1	Bearing-Thrust
3	133-1762	1	Shaft-Coupling
4	133-1763	5	Ring-Seal
5	133-1764	1	Plate-Wear
6	133-1765	1	Link-Drive
7	133-1766	1	Set-Rotor
8	133-1767	1	Manifold
9	133-1768	1	Commutator
10	133-1769	1	Seal-Commutator
11	133-1771	1	Cover-End
12	133-1772	6	Special Bolt
13	133-1773	1	Seal, Dirt And Water
14		1	Identification Tag ■
15	133-1774	2	Screw-Drive
16	133-1775	1	Ring-Back Up
17	133-1776	1	Washer-Thrust
18	133-1777	1	Shaft-Seal
19	3257-8	1	Key-Woodruff
20	85-7310	1	Nut-Motor, Wheel
21	133-1778	1	Washer-Back Up
99	133-1779	1	Seal Kit ●

● Not illustrated

■ Not serviced separately

Engine Assembly

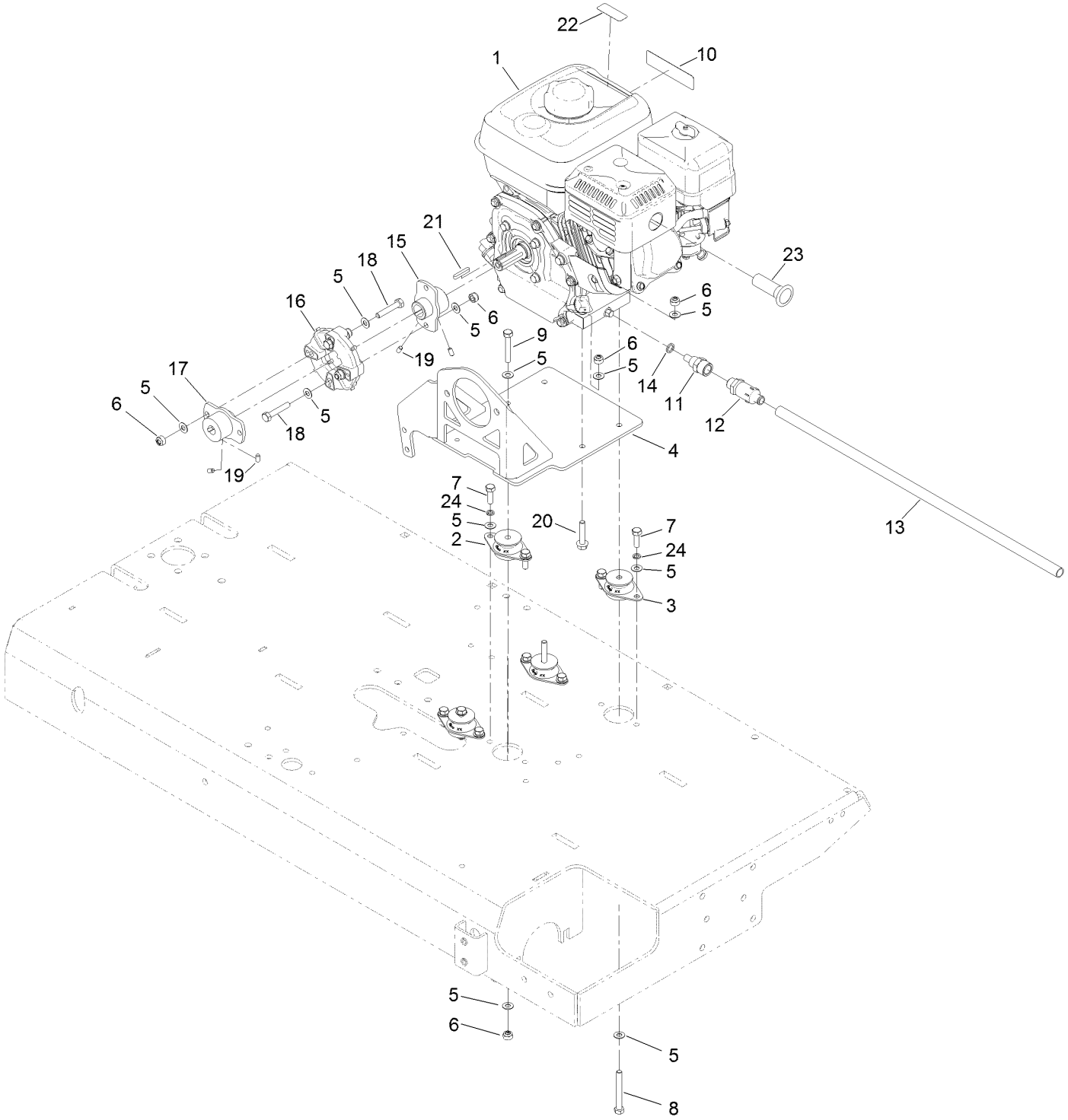

Engine Assembly (continued)

Ref.	Part Number	Qty.	Description
1	111-7153	1	Engine-Honda
2	132-4799	2	Mount-Engine
3	132-4803	2	Mount-Engine
4	132-9217-01	1	Engine Plate
5	09475	26	Washer
6	09441	10	Nut-Hex, NI
7	03162	8	Screw-HH
8	ZBH1H070U	2	Bolt
9	ZBH1H050U	2	Bolt
10	133-8062	1	Decal-Arrestor, Spark
11	111-7088	1	Adaptor-Drain, Oil
12	92-6877	1	Valve-Drain, Oil
13	103-1964	1	Hose-Drain, Oil
14	111-7401	1	Washer-Plug, Sump
15	132-4812	1	Engine Collar ASM
16	119-0652	1	Coupler-Rubber
17	132-4814	1	Pump Collar ASM
18	09654	4	Bolt
19	133-1717	4	Screw-Set
20	33104-040	2	Screw-HHF
21	103-2739	1	Key
22	130-8322	1	Decal-Warning, Ethanol
23	111-6526	1	Arrester-Spark
24	03469	8	Washer-Spring

Tire Assembly

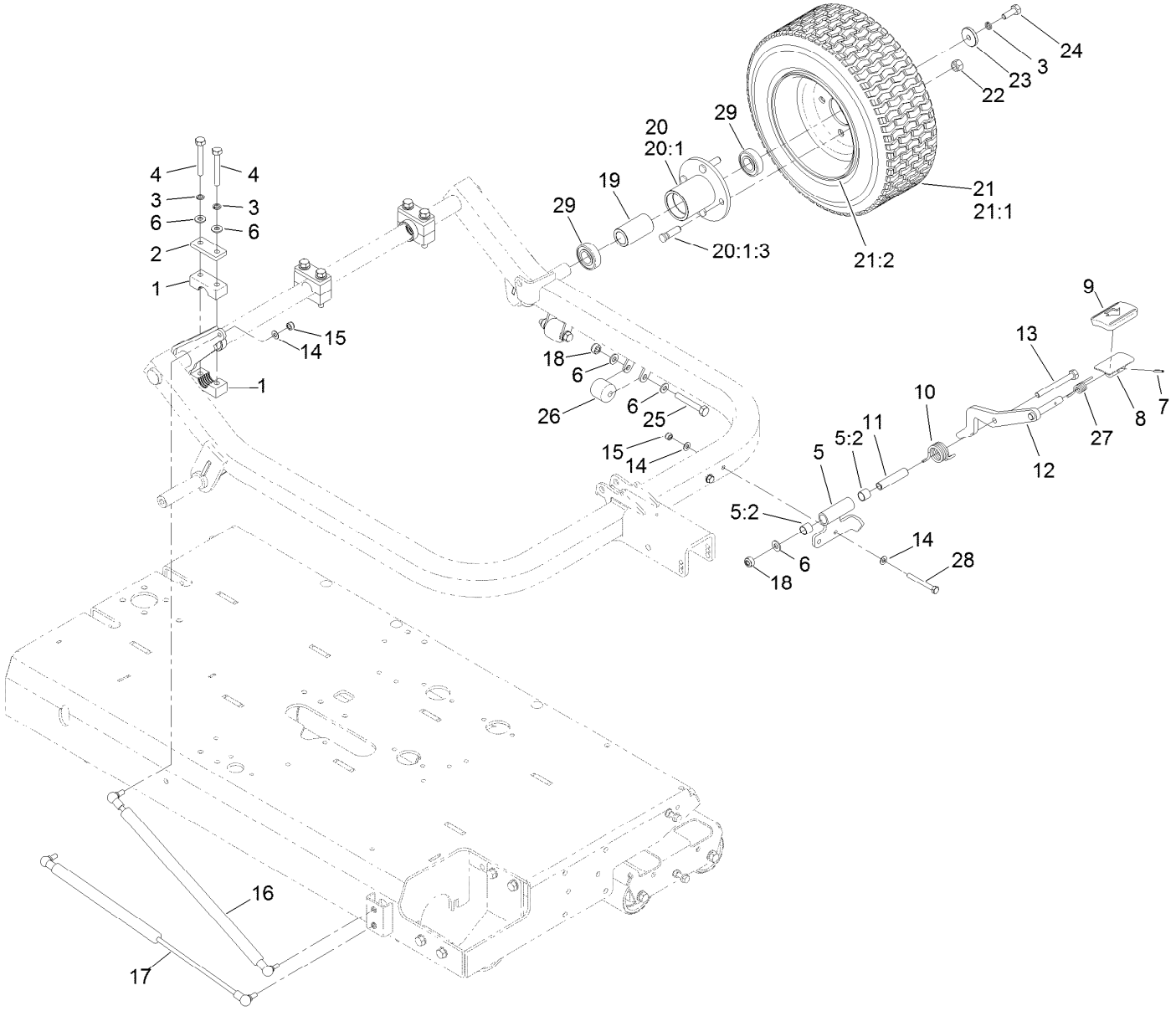

Tire Assembly (continued)

Ref.	Part Number	Qty.	Description
1	127-8044	3	Clamp-Drawbar
2	111-5681	3	Plate-Clamp, Axle
3	09480	8	Washer-Lock
4	ZBH1J075U	6	Bolt-HH
5	127-1351	1	Pedal Pivot ASM
5:2	256-311	2	Bushing-Split
6	ZWQ1J000U	11	Washer-Plain
7	32121-45	1	Pin-Spring
8	117-9507	1	Pedal-Accelerator
9	74-9100	1	Pad-Pedal, Forward
10	127-1353	1	Spring-Torsion
11	127-1355	1	Spacer
12	132-4778-01	1	Pedal Lever ASM
13	ZBH1J095U	1	Bolt-HH
14	09475	6	Washer
15	09441	4	Nut-Hex, NI
16	127-1326	1	Damper

Ref.	Part Number	Qty.	Description
17	125-5696	1	Spring-Gas
18	ZNN1J000U	3	Nut-Hex, NI
19	111-5858	2	Spacer-Bearing
20	111-7103-03	2	Wheel Hub ASM
20:1		1	Wheel Hub ASM ●■
20:1:3	94-4143	4	Stud-Wheel
21	111-5678	2	Wheel And Tire ASM
21:1	111-5755	1	Tire
21:2	111-5756	1	Rim-Wheel
22	93-5268	8	Nut-Lug
23	111-5674	2	Collar-Fixing
24	09392	2	Screw-HH
25	09399	2	Bolt
26	127-1342	2	Roller
27	127-8034	1	Spring-Torsion
28	ZBH1H070U	2	Bolt
29	120-4621	4	Bearing

● Not illustrated

■ Not serviced separately

Lifting Mechanism Assembly

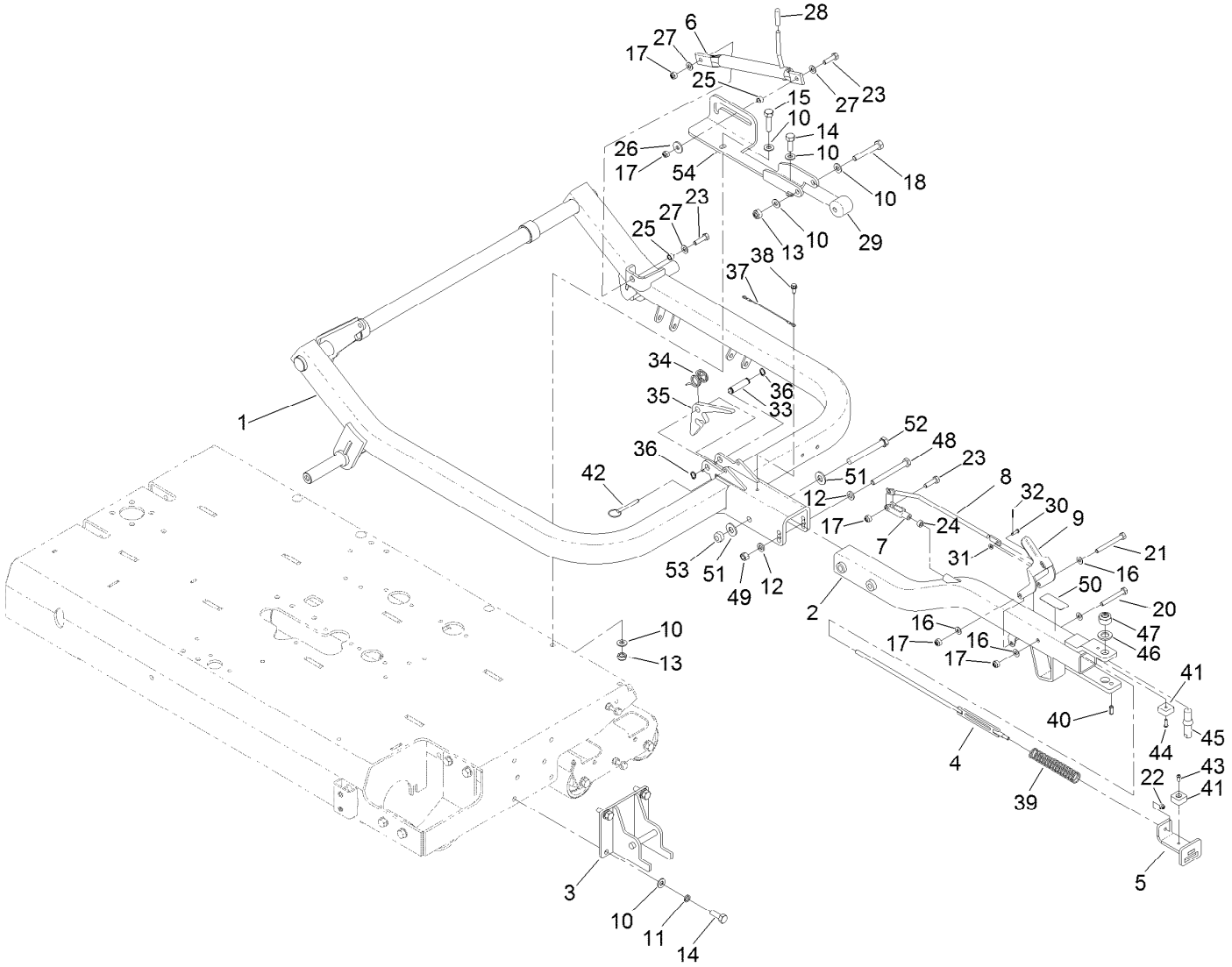

Lifting Mechanism Assembly (continued)

Ref.	Part Number	Qty.	Description
1	131-6437-01	1	Hitch Pivot ASM
2	132-4770-01	1	Hitch
3	132-7075-01	1	Bracket-Lock
4	125-5743	1	Lever-Slide
5	132-4775-01	1	Bracket-Slide
6	132-4826-01	1	Lever-Lock, Hitch
7	1-303105	1	Yoke-Adjustable
8	127-1317	1	Wire-Form
9	132-9262	1	Lever
10	ZWQ1J000U	10	Washer-Plain
11	09480	4	Washer-Lock
12	107-1413	2	Washer-Hardened
13	ZNN1J000U	3	Nut-Hex, NI
14	09392	5	Screw-HH
15	09611	1	Bolt-HH
16	09475	4	Washer
17	09441	5	Nut-Hex, NI
18	09399	1	Bolt
20	ZBH1H065U	1	Bolt
21	ZBH1H075U	1	Bolt
22	09438	1	Nut-Nyloc
23	09369	3	Screw-HH
24	09207	1	Nut
25	120-9697	2	Spacer
26	1-603716	1	Washer-Friction
27	3256-23	3	Washer-Plain
28	125-5722	1	Cap-Flex
29	127-1342	1	Roller
30	283-29	1	Pin-Clevis
31	3256-51	1	Washer-Flat
32	3272-1	1	Pin-Cotter
33	125-5731	1	Pin-Lock, Lever
34	125-5723	1	Spring-Torsion
35	125-5711-01	1	Latch-Hitch
36	32151-61	2	Ring-Retaining
37	28-8070	1	Lanyard
38	32144-10	1	Screw-HWH
39	125-5737	1	Spring-Compression
40	32121-123	1	Pin-Roll
41	94-1392	2	Pad-Rubber
42	108-0094	1	Pin-Cotterless
43	127-5866	1	Screw-HSBH
44	119-7568	1	Screw-HSBH
45	127-5861	1	Pin-Tow
46	09491	1	Washer-Plain
47	09456	1	Nut
48	127-5864	1	Screw-HH
49	131-1558	1	Nut-Lock
50	127-5885	1	Decal-Disconnect, Hitch
51	87-7270	2	Washer-Thrust
52	131-1557	1	Screw-HH
53	94-4307	1	Nut-Hex, Lock
54	133-1756-01	1	Bracket-Slide

Seat Assembly

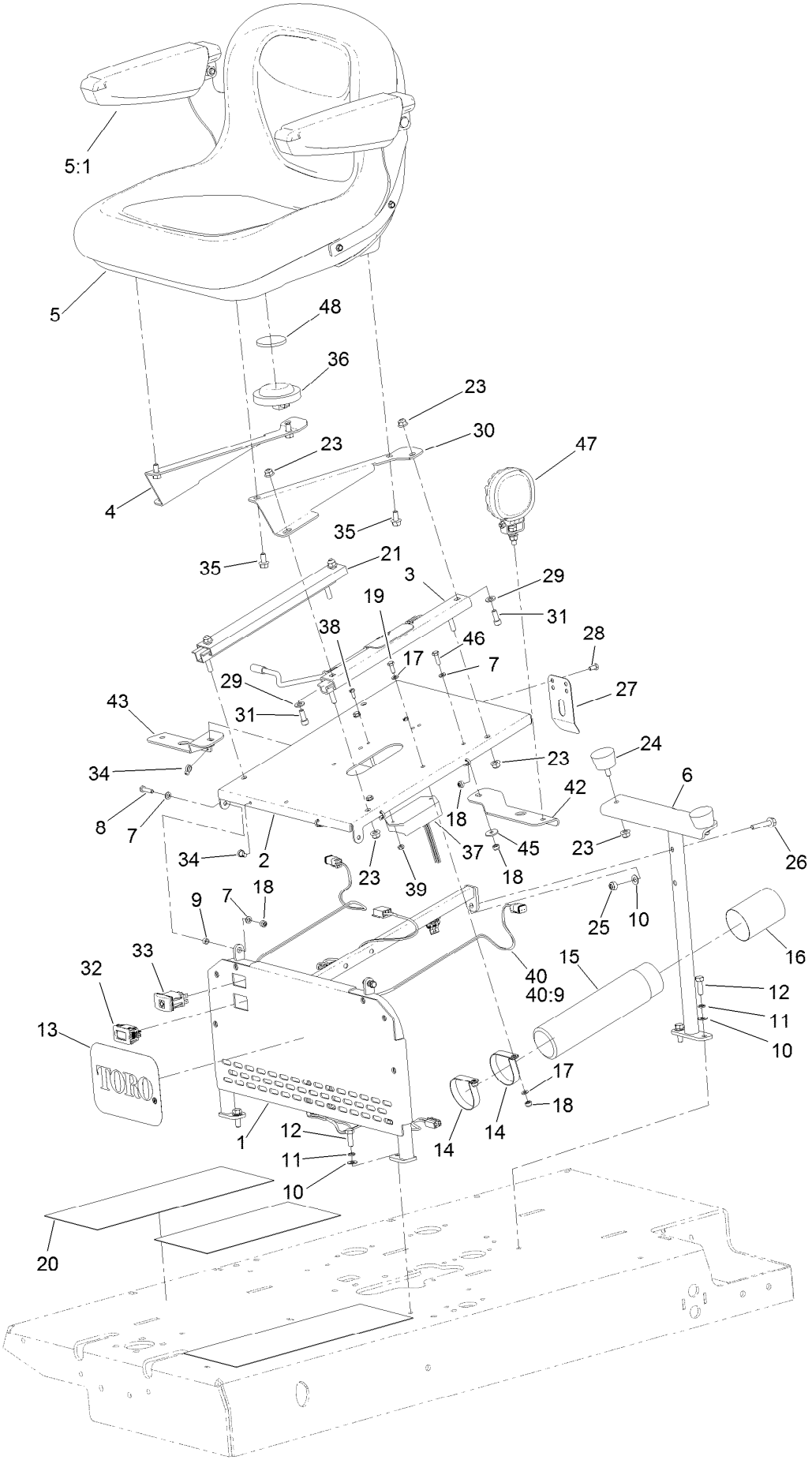

Seat Assembly (continued)

Ref.	Part Number	Qty.	Description
1	131-6449-03	1	Seat Support
2	131-6447-03	1	Seat Pan
3	133-8896	1	Seat Adjuster Lever ASM
4	131-6448-03	1	Bracket-Seat, RH
5	133-1729	1	Seat Assembly
5:1	111-6564	1	Arm Rest Kit
6	132-4751-01	1	Support-Frame, Rear
7	09472	6	Washer-Plain
8	ZBH1F025U	2	Bolt-HH
9	88-7860	2	Spacer
10	09475	5	Washer
11	03469	4	Washer-Spring
12	03162	4	Screw-HH
13	67-7320	1	Decal
14	107-1865	2	R-Clamp
15	104-7050	1	Tube-Manual
16	104-7048	1	Cap-Housing
17	ZWP1F000U	4	Washer-Plain
18	09438	8	Nut-Nyloc
19	09362	2	Screw-HH
20	70-07-067	4	Tape-Slip, Anti
21	92-8990	1	Adjuster-Slave
23	104-8300	10	Nut-HF, NI
24	68-3270	2	Bumper-Rubber
25	09441	1	Nut-Hex, NI
26	33104-040	1	Screw-HHF
27	66-2630	1	Latch-Seat
28	09361	2	Screw-HH
29	3256-23	4	Washer-Plain
30	132-4750-03	1	Bracket-Seat, LH
31	3274-10	4	Screw-HSH
32	120-2244	1	Hourmeter
33	111-6576	1	Switch
34	HY3966	8	Tie-Cable
35	33104-016	4	Screw-HHF
36	100-3524	1	Switch-Seat
37	122-0423	1	Module-Ground, Magneto
38	32105-8	2	Screw-SHH
39	110-3145	2	Nut-Lock
40	122-0832	1	Harness-Wire
40:9	122-1006	1	Harness-Wire, Jumper
42	132-4806-03	1	Light Mount
43	132-4805-03	1	Light Mount
45	09263	2	Washer
46	09363	2	Screw-HH
47	133-8793	2	Light-LED
48	133-2797	1	Disc-Plunger
99	107-0342	1	Sealant-Electrical ●

● Not illustrated

Steering Wheel Assembly

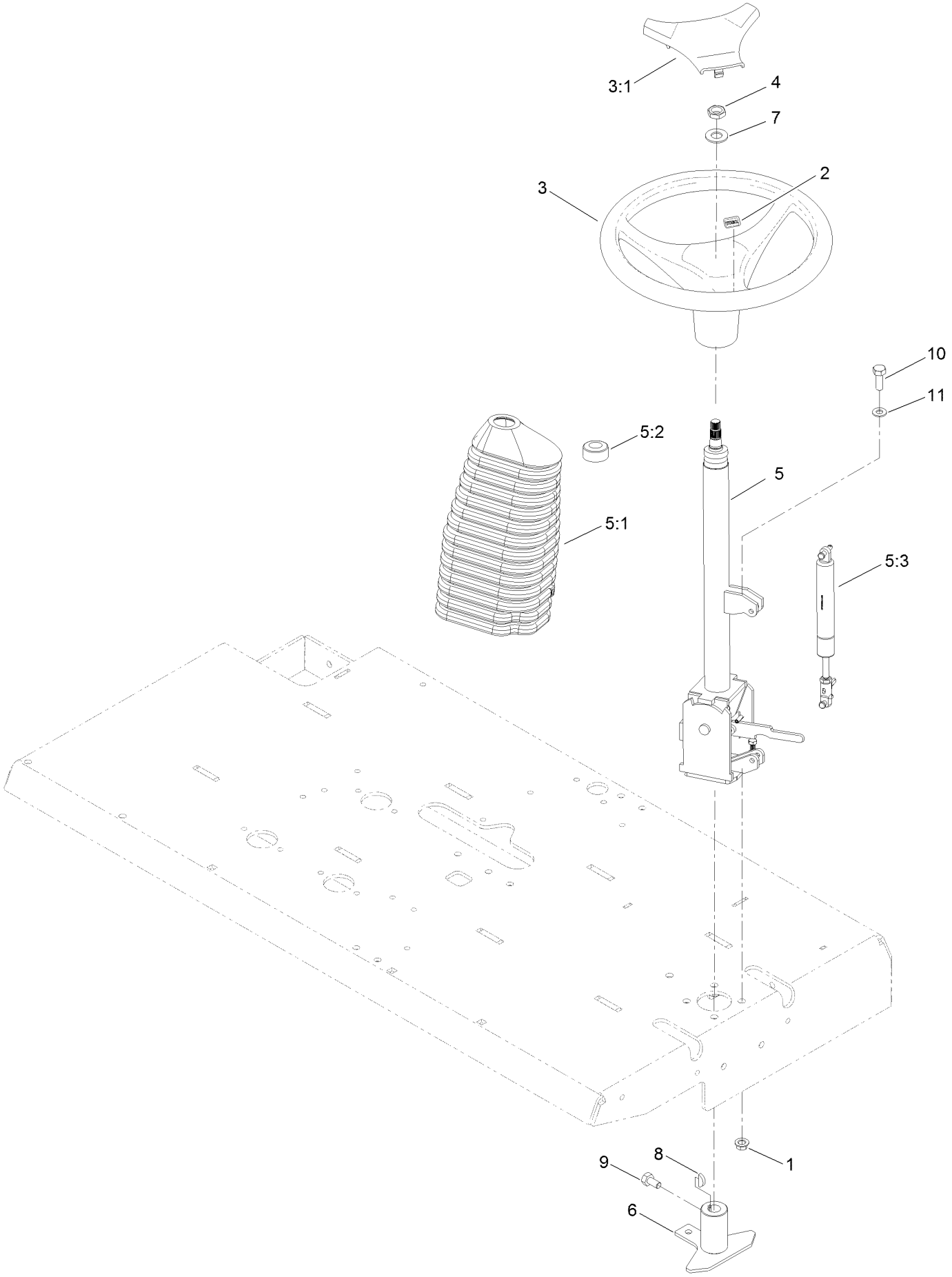

Steering Wheel Assembly (continued)

Ref.	Part Number	Qty.	Description
1	63-11-015	4	Nut-Hex
2	98-1459	1	Decal
3	98-1471	1	Wheel-Steering
3:1	98-1468	1	Cover-Wheel, Steering
4	110-8816	1	Nut-Hex
5	127-8041	1	Column-Steering
5:1	120-2592	1	Boot-Rubber, Column
5:2	120-2593	1	Boot-Rubber, Bearing
5:3	120-2594	1	Gas Spring ASM
6	132-7084-01	1	Steering Pivot
7	3256-27	1	Washer-Flat
8	3257-7	1	Key-Woodruff
9	09391	1	Screw-HH
10	09392	4	Screw-HH
11	ZWQ1J000U	4	Washer-Plain

Parking Brake Assembly

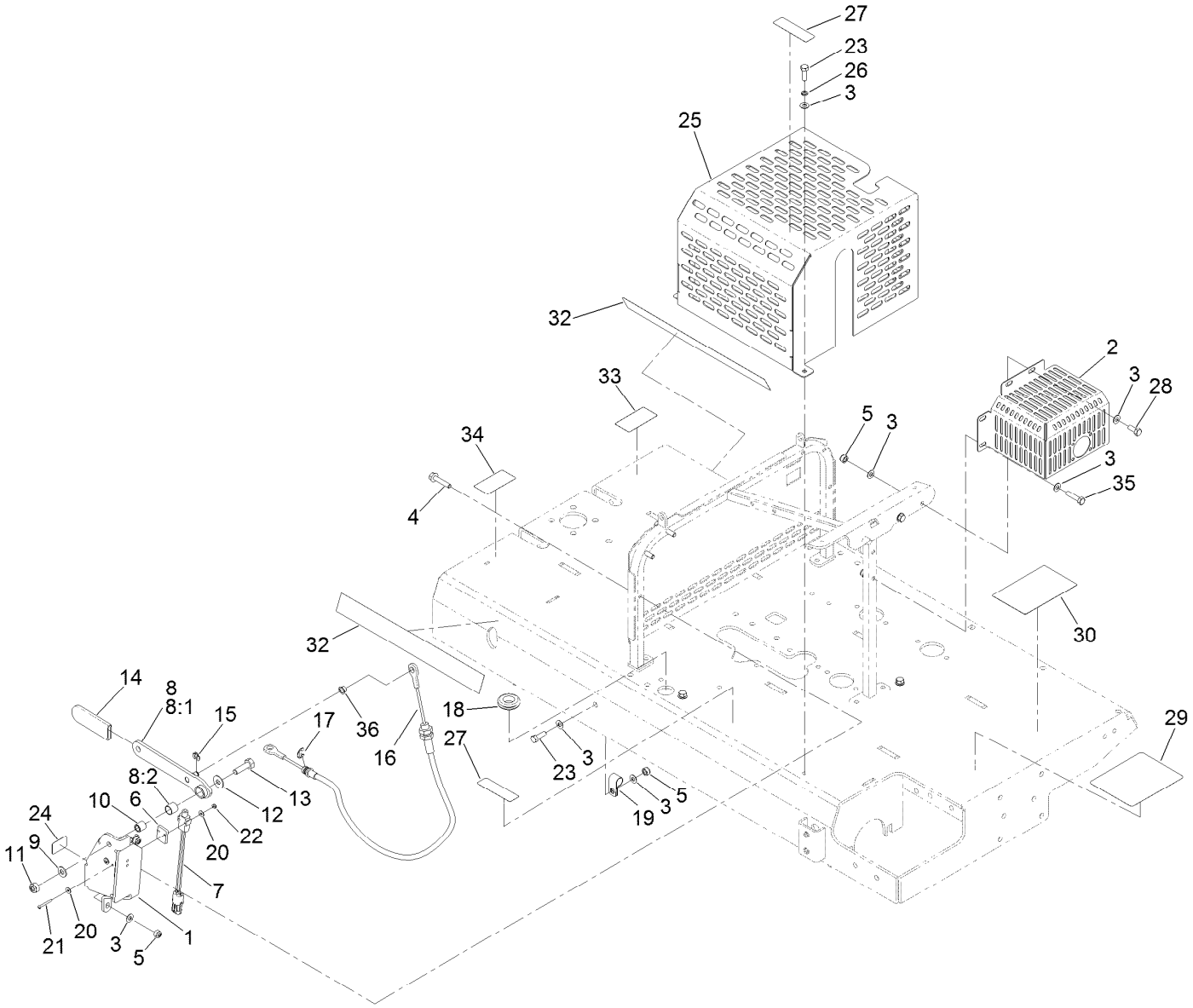

Parking Brake Assembly (continued)

Ref.	Part Number	Qty.	Description
1	132-4837-03	1	Support-Lever, Brake
2	132-4801-03	1	Guard-Exhaust
3	09475	14	Washer
4	33104-040	3	Screw-HHF
5	09441	7	Nut-Hex, NI
6	131-6383	1	Spacer
7	99-3410	1	Switch
8	132-4839	1	Brake Handle ASM
8:1	132-4838	1	Lever-Brake
8:2	256-311	1	Bushing-Split
9	ZWQ1J000U	1	Washer-Plain
10	131-6386	1	Bushing-Pivot
11	ZNN1J000U	1	Nut-Hex, NI
12	HY03355	1	Washer-Plated
13	09394	1	Bolt
14	21-1880	1	Grip-Handle
15	32151-47	1	Ring-Retaining
16	136-6225	1	Cable-Brake, Park
17	32120-47	1	Ring-Retaining, External
18	1-543286	1	Grommet
19	2412-41	1	Clamp-R
20	3269-6	4	Washer-Flat
21	3249-11	2	Screw-Machine
22	3296-9	2	Nut-Hex
23	03162	4	Screw-HH
24	131-0440	1	Decal-Brake, Parking
25	133-1719	1	Cover-Transmission
26	03469	3	Washer-Spring
27	120-0627	2	Decal-Warning
28	09368	2	Screw-HH
29	132-9299	1	Decal-Service
29	133-1703	1	Decal-Service, Czech
29	133-1704	1	Decal-Service, Danish
29	133-1705	1	Decal-Service, German
29	133-1706	1	Decal-Service, Spanish
29	133-1707	1	Decal-Service, Finnish
29	133-1708	1	Decal-Service, French
29	133-1709	1	Decal-Service, Italian
29	133-1710	1	Decal-Service, Japanese
29	133-1711	1	Decal-Service, Dutch
29	133-1712	1	Decal-Service, Norwegian
29	133-1713	1	Decal-Service, Polish
29	133-1714	1	Decal-Service, Portuguese
29	133-1715	1	Decal-Service, Swedish
30	127-5884	1	Decal-Operation
32	132-9298	2	Decal
33	111-5650	1	Decal-Control, Pedal (RH)
34	111-5649	1	Decal-Control, Pedal (LH)
35	ZDH1H035U	1	Screw-HH
36	132-9291	1	Bushing-Cable

Control Assembly

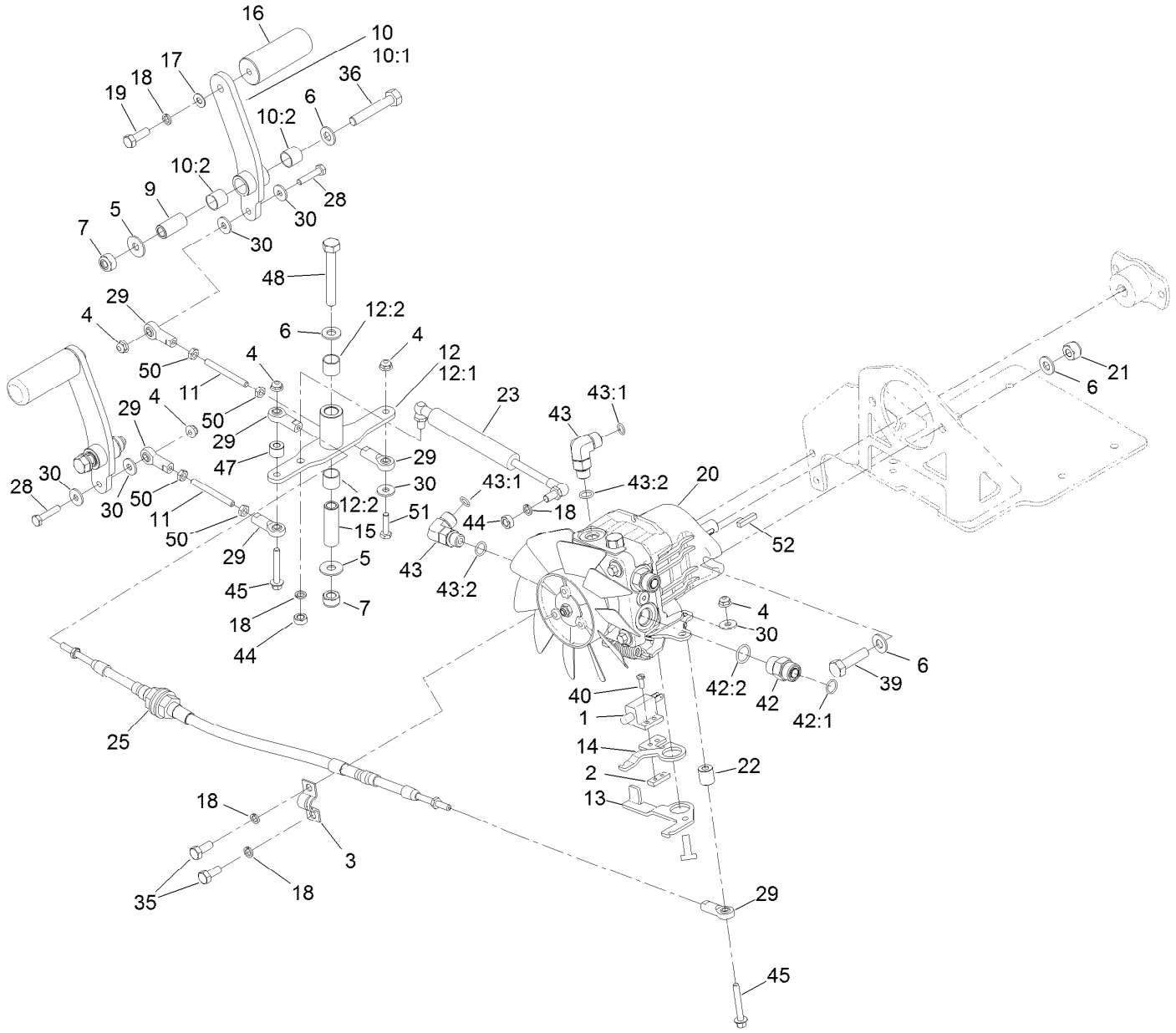

Control Assembly (continued)

Ref.	Part Number	Qty.	Description
1	1-513051	1	Switch-Open, Normally
2	1-633181	1	Plate-Tapped
3	93-2092	1	Clamp-Cable
4	104-7201	5	Nut-HF
5	HY03355	3	Washer-Plated
6	ZWQ1J000U	7	Washer-Plain
7	ZNN1J000U	3	Nut-Hex, NI
9	131-6350	2	Bushing-Pivot
10	132-4844	2	Motion Pedal ASM
10:1	132-9229	1	Pedal-Motion
10:2	256-311	2	Bushing-Split
11	132-9224	2	Rod-Pedal
12	132-9236	1	Pedal Rod Pivot ASM
12:1	132-9220	1	Pivot-Rod, Pedal
12:2	256-311	2	Bushing-Split
13	132-4795	1	Arm
14	132-4796	1	Arm
15	132-9226	1	Bushing-Pivot
16	111-5727	2	Pedal
17	09475	2	Washer
18	03469	6	Washer-Spring
19	03162	2	Screw-HH
20	132-4797	1	Pump-Hydraulic
21	09447	2	Nut

Ref.	Part Number	Qty.	Description
22	132-4798	1	Bushing
23	132-4807	1	Damper
25	132-7098	1	Cable-Traction
28	321-8	2	Screw-HH
29	2411-41	6	Rod End-Ball Joint
30	3256-78	6	Washer-Flat
35	09368	2	Screw-HH
36	09397	2	Bolt
39	09611	2	Bolt-HH
40	32105-8	2	Screw-SHH
42	340-4	2	Fitting-Straight
42:1	237-30	1	O-Ring
42:2	237-79	1	O-Ring
43	340-77	2	Fitting-Elbow, 90 DEG
43:1	237-22	1	O-Ring
43:2	237-42	1	O-Ring
44	ZNH1H000U	2	Nut-Hex
45	32105-18	2	Screw-HHF
47	132-9237	1	Bushing
48	ZBH1J075U	1	Bolt-HH
50	3220-1	4	Nut-Jam
51	321-6	1	Screw-HH
52	111-5724	1	Key-Square

Hydraulic Pump Assembly No. 132-4797

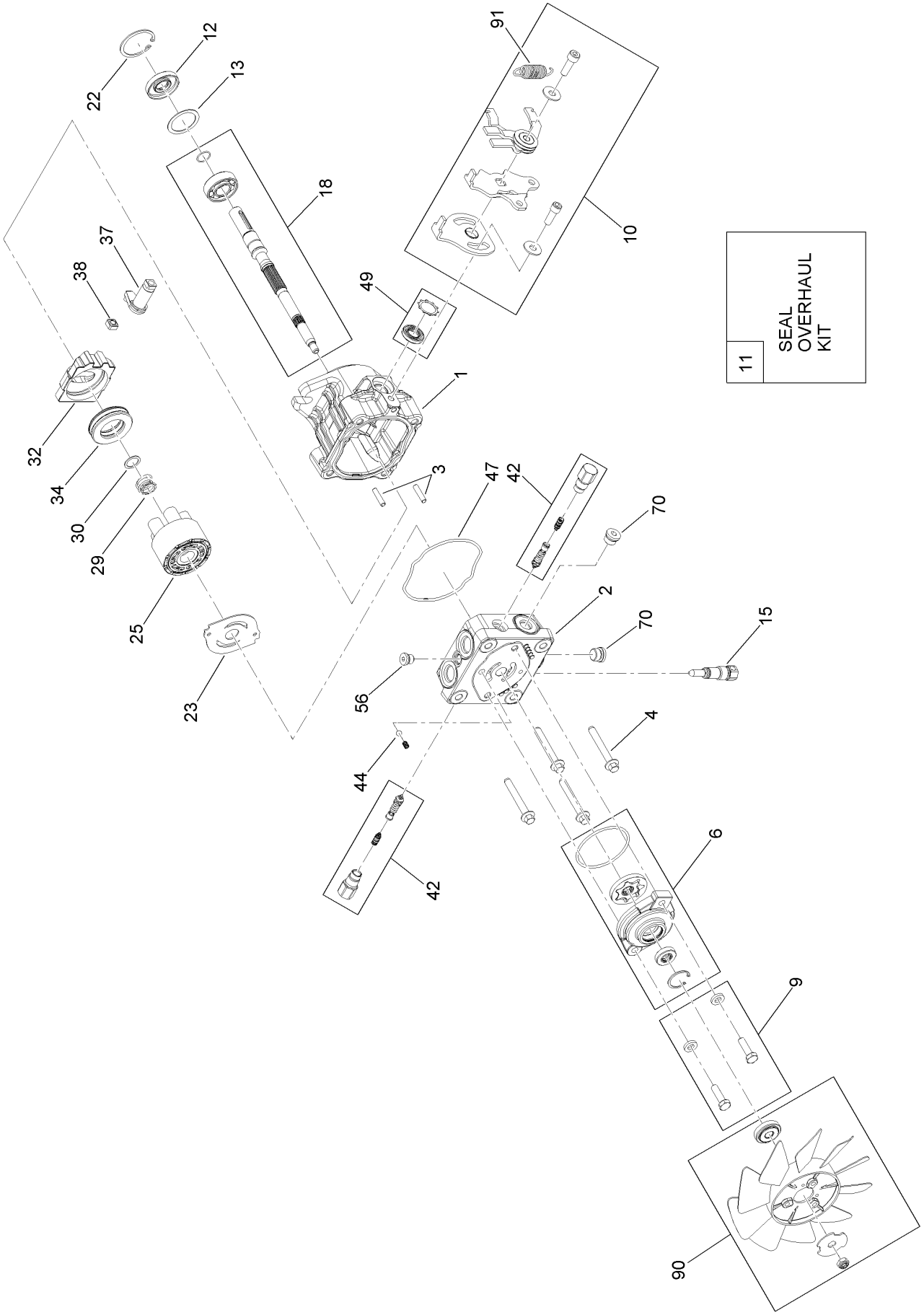

Hydraulic Pump Assembly No. 132-4797 (continued)

Ref.	Part Number	Qty.	Description
1	133-1780	1	Housing Kit
2	133-1781	1	Endcap Kit
3	106-8753	2	Pin-Headless, Straight
4	133-1783	4	Hex Flange Bolt
6	133-1784	1	STD Charge Pump Kit
9	133-1785	1	Charge Pump Bolt Kit
10	115-4459	1	Return Kit
11	105-6184	1	Seal Overhaul Kit
12	104-5310	1	Seal-Lip
13	133-1787	1	Washer-Flat
15	106-8759	1	Bypass Valve Kit
18	133-1789	1	Shaft Kit
22	104-5309	1	Ring-Retaining
23	105-6185	1	Plate-Valve
25	103-2666	1	Cylinder Block Kit
29	133-1793	1	Spring-Block
30	133-1794	1	Washer-Flat
32	133-1795	1	Swashplate-Coated, 10Cc
34	121-3235	1	Bearing-Thrust, Plastic Cage
37	133-1797	1	Arm-Trunnion, Square (Taper)
38	133-1798	1	Slot-Guide
42	133-1799	2	Shock Valve 160 Bar Kit
44	136-6150	1	Charge Relief Kit
47	125-4682	1	O-Ring
49	106-8761	1	Trunnion Seal / Retainer Kit
56	106-8762	1	Plug-HSH
70	104-2189	2	Plug-Thread, Straight
90	136-6154	1	Fan/Hub Kit
91	115-8307	1	Spring-Extension

Cylinder Head Assembly

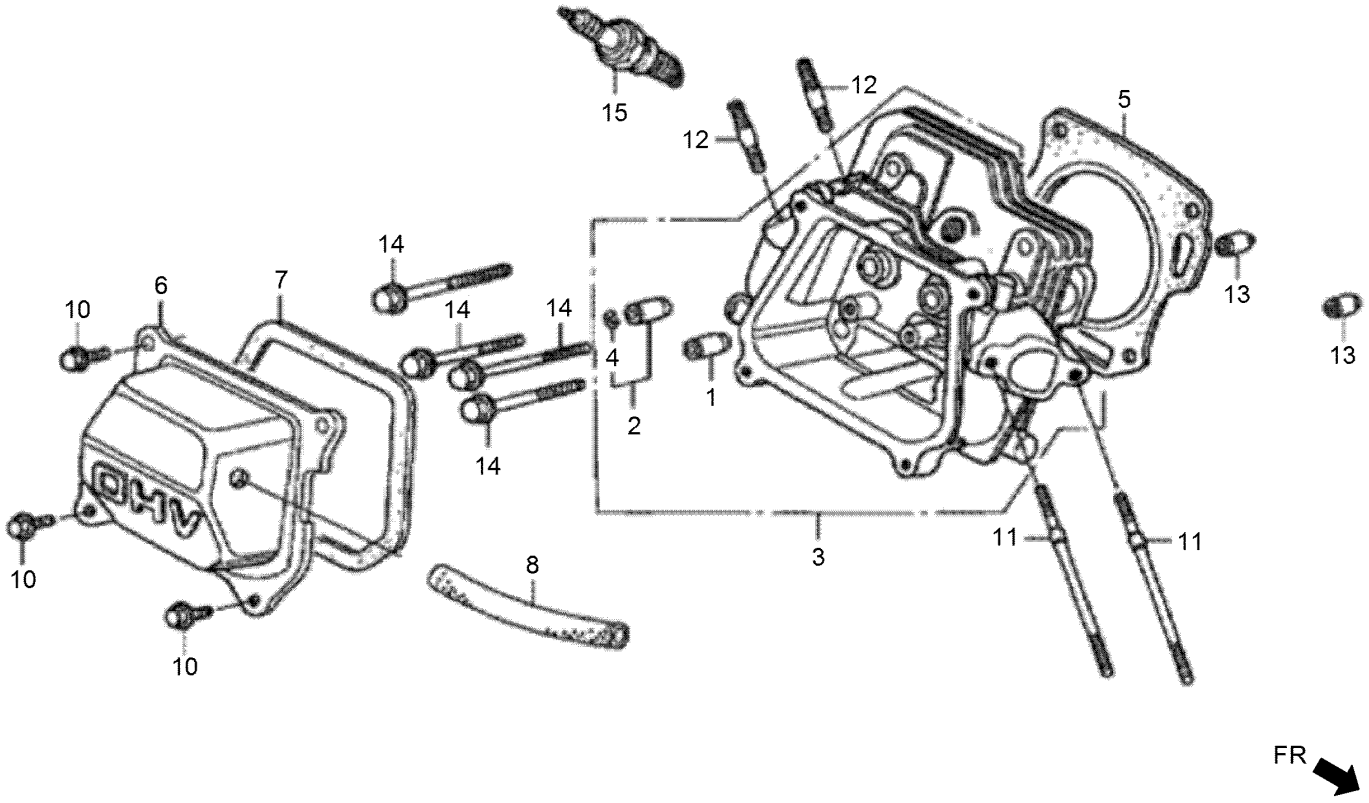

Cylinder Head Assembly (continued)

Ref.	Part Number	Qty.	Description
1	132-0118	1	Guide-Intake Valve
2	132-0119	1	Guide-Exhaust Valve
3	132-0124	1	Cylinder Head ASM
4	132-0125	1	Clip-Valve Guide
5	132-0126	1	Gasket-Cylinder Head
6	132-0127	1	Head Cover ASM
7	132-0133	1	Packing-Head Cover
8	132-0234	1	Tube-Breather
10	132-4880	4	Bolt-Flange-6X12
11	132-0612	2	Bolt-Stud-6X112
12	132-0615	2	Bolt-Stud-8X32
13	132-0697	2	Dowel Pin-10X16
14	131-8226	4	Bolt-Flange-8X60
15	131-8233	1	Sparkplug

Cylinder Barrel Assembly

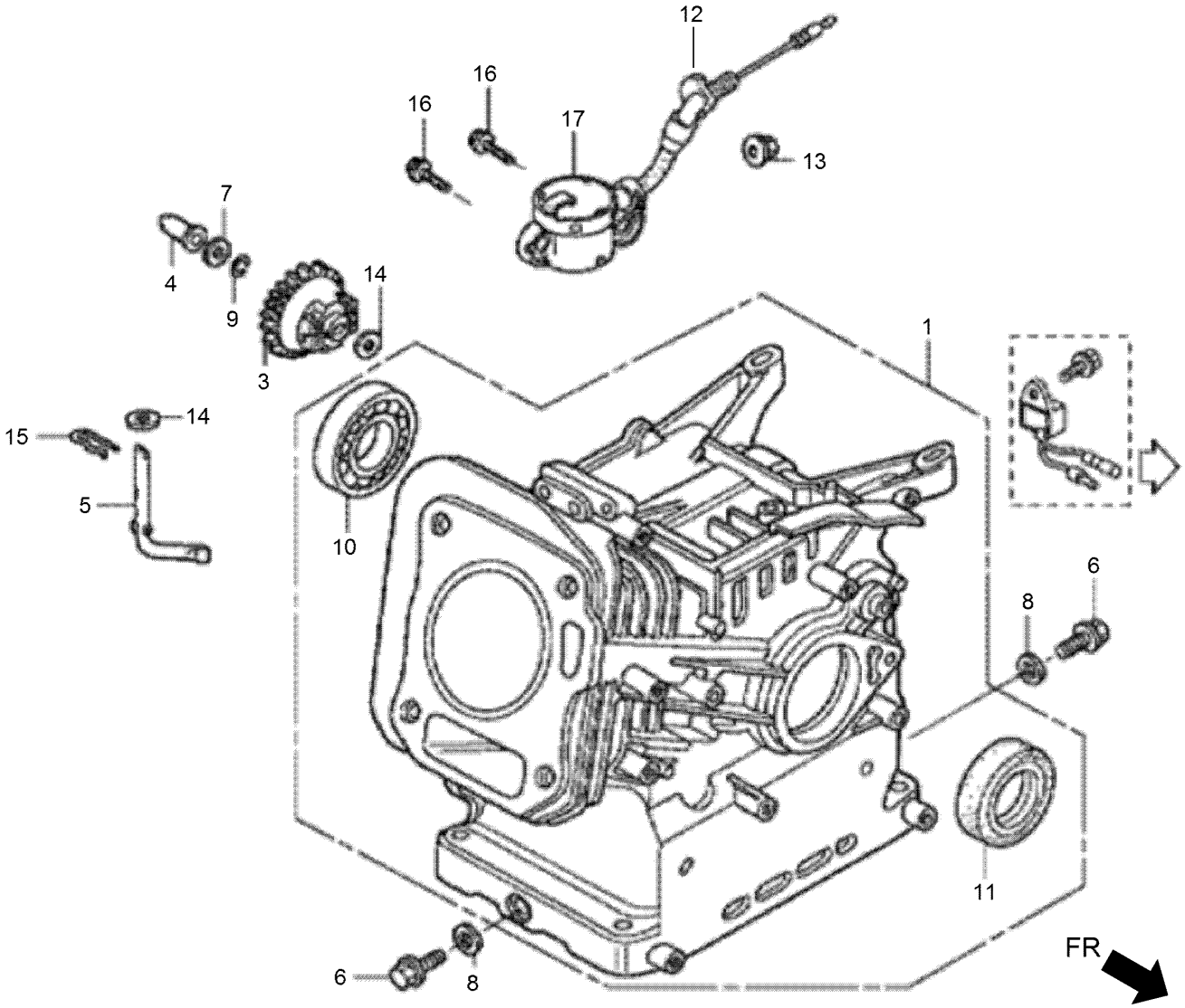

Cylinder Barrel Assembly (continued)

Ref.	Part Number	Qty.	Description
1	132-0114	1	Barrel ASM-Cylinder
3	132-0294	1	Governor ASM
4	132-0304	1	Slider-Governor
5	132-0307	1	Shaft-Governor Arm
6	132-0622	2	Bolt-Drain Plug
7	132-0635	1	Washer-Thrust-6Mm
8	132-0640	2	Washer-Drain Plug-10.2Mm
9	132-0642	1	Clip-Governor Holder
10	132-0651	1	Bearing-Radial Ball
10	132-0650	1	Bearing-Radial Ball
10	132-0649	1	Bearing-Radial Ball
11	132-0654	1	Oil Seal-25X41X6
11	132-0658	1	Oil Seal-25X41.25X6
12	132-0668	1	O-Ring-14Mm
13	132-0686	1	Nut-Flange-10Mm
14	132-0688	2	Washer-Plain-6Mm
15	132-0693	1	Pin-Lock-8Mm
16	131-8221	2	Bolt-Flange-6X12
17	132-0532	1	Switch ASM-Oil Level

Crankcase Cover Assembly

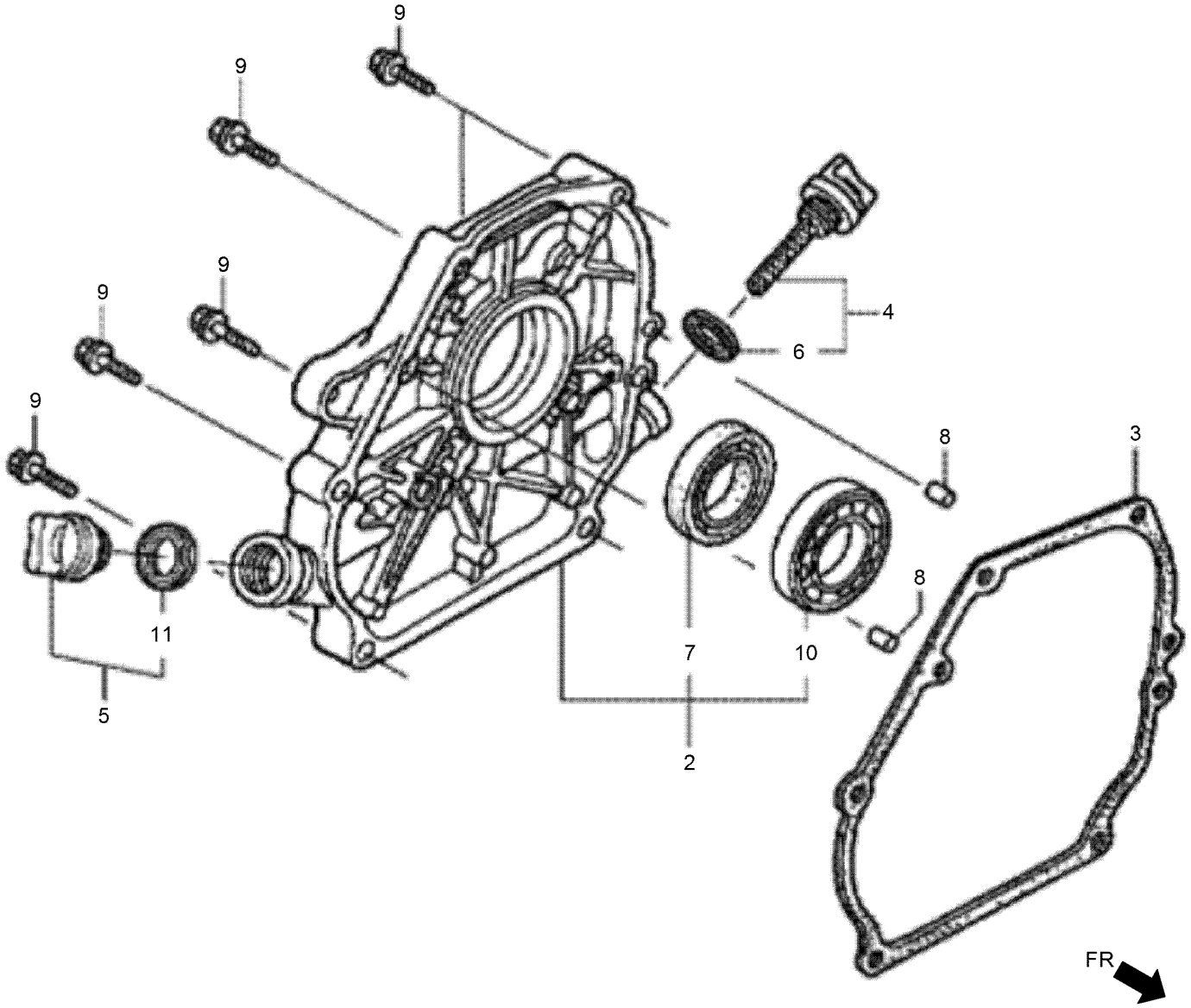

Crankcase Cover Assembly (continued)

Ref.	Part Number	Qty.	Description
2	132-0103	1	Cover ASM-Crankcase
3	132-0108	1	Packing-Case Cover
4	132-0220	1	Cap ASM-Oil Filler
5	132-0221	1	Cap ASM-Oil Filler
6	132-0224	1	Packing-Oil Filler Cap
7	132-0654	1	Oil Seal-25X41X6

Ref.	Part Number	Qty.	Description
7	132-0658	1	Oil Seal-25X41.25X6
8	132-0695	2	Dowel Pin-8X14
9	131-8225	6	Bolt-Flange-8X32
10	131-8227	1	Bearing-Radial Ball-6205
11	132-0224	1	Packing-Oil Filler Cap

Crankshaft Assembly

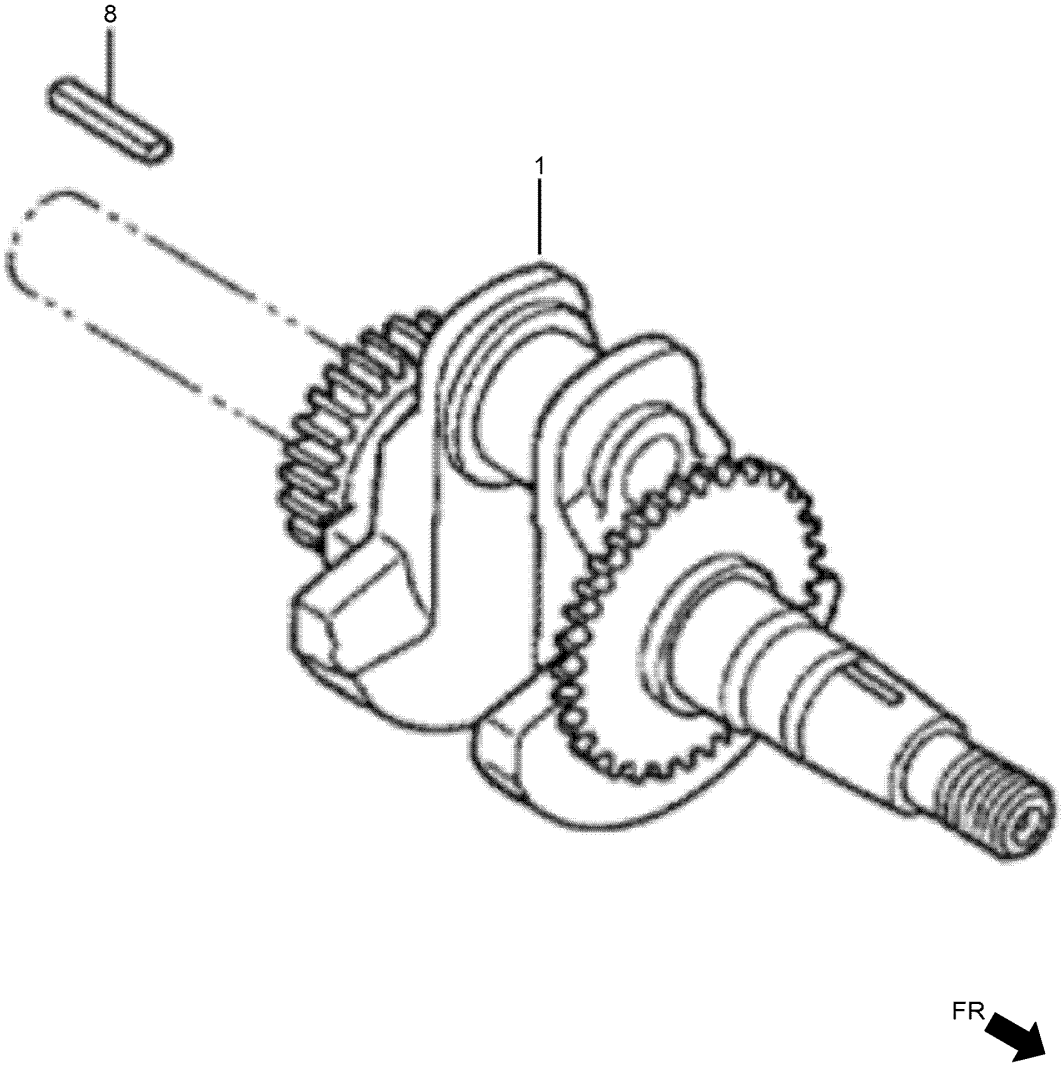

Crankshaft Assembly (continued)

Ref.	Part Number	Qty.	Description
1	132-0164	1	Crankshaft ASM
8	132-0647	1	Key-5X5X33

Piston and Connecting Rod Assembly

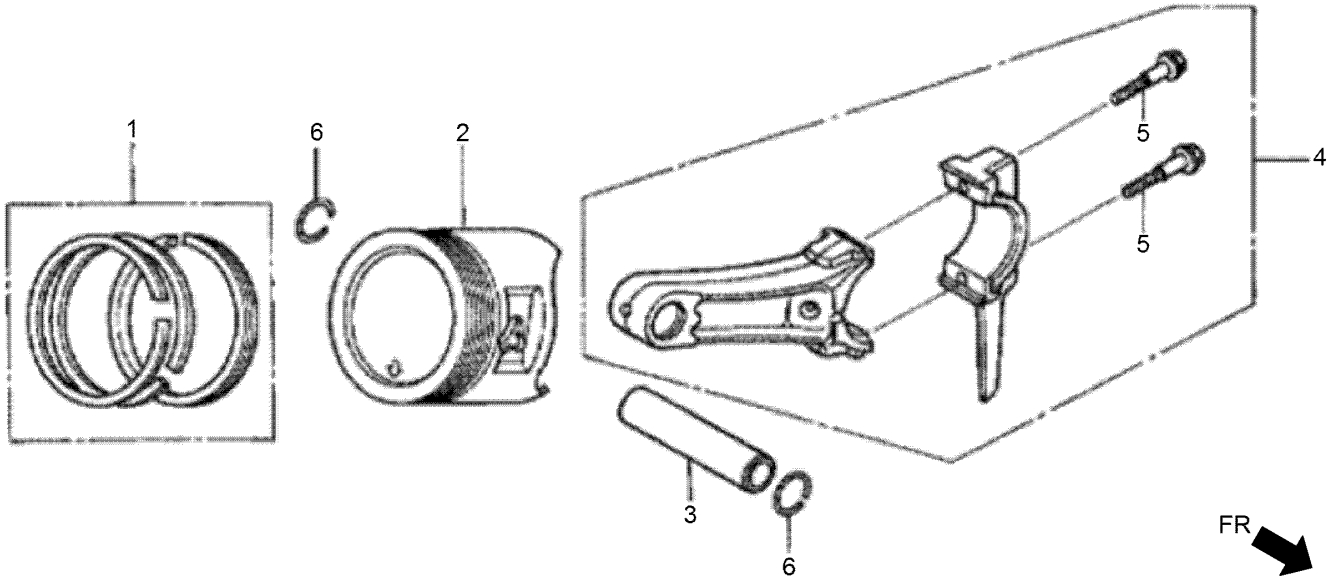

Piston and Connecting Rod Assembly (continued)

Ref.	Part Number	Qty.	Description
1	132-0137	1	Ring Set-Piston (STD)
1	132-0138	1	Ring Set-Piston (STD)
2	132-0144	1	Piston
3	132-0150	1	Pin-Piston
4	132-0155	1	Rod ASM-Connecting
5	132-0573	2	Bolt-Connecting Rod
6	132-0637	2	Clip-Piston Pin-18Mm

Camshaft Assembly

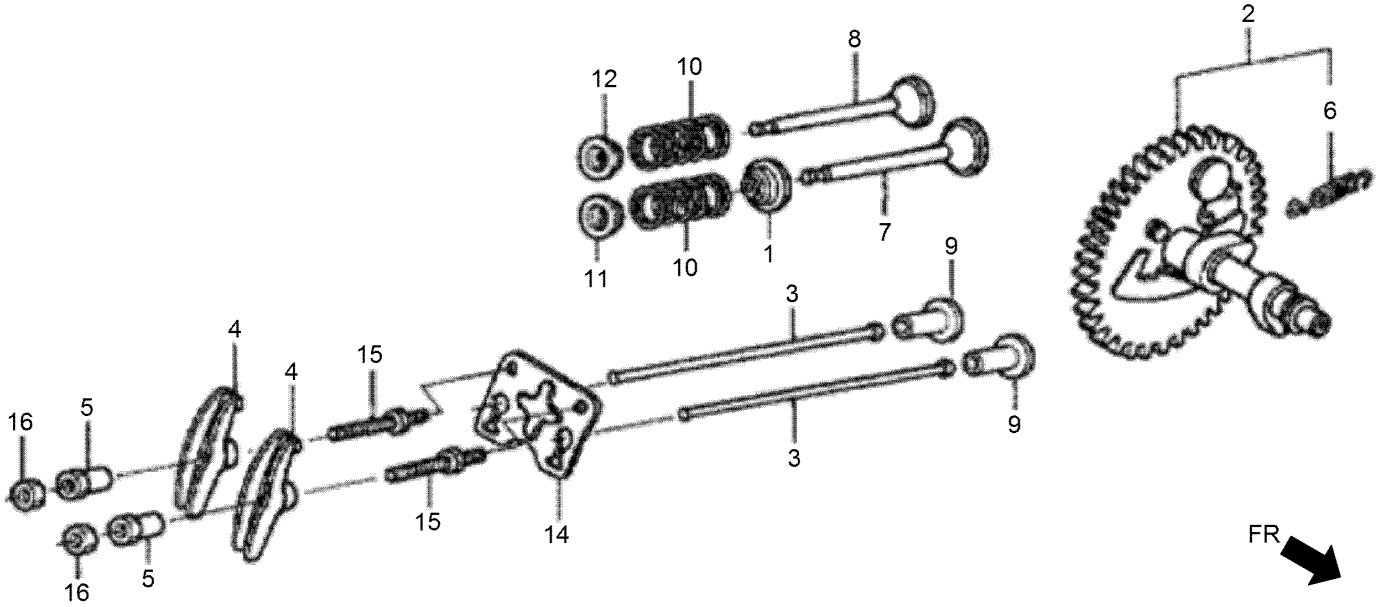

Camshaft Assembly (continued)

Ref.	Part Number	Qty.	Description
1	132-0120	1	Seal-Valve Stem
2	132-0172	1	Camshaft ASM
3	132-0181	2	Rod-Push
4	132-0184	2	Arm-Valve Rocker
5	132-0188	2	Pivot-Rocker Arm
6	132-0191	1	Spring-Weight Return
7	132-0194	1	Valve-Intake
8	132-0198	1	Valve-Exhaust
9	132-0203	2	Lifter-Valve
10	132-0206	2	Spring-Valve
11	132-0211	1	Retainer-Intake Valve Spring
12	132-0211	1	Retainer-Intake Valve Spring
14	132-0215	1	Plate-Push Rod Guide
15	132-0592	2	Bolt-Pivot-8Mm
16	132-0629	2	Nut-Pivot Adjusting

Recoil Starter Assembly

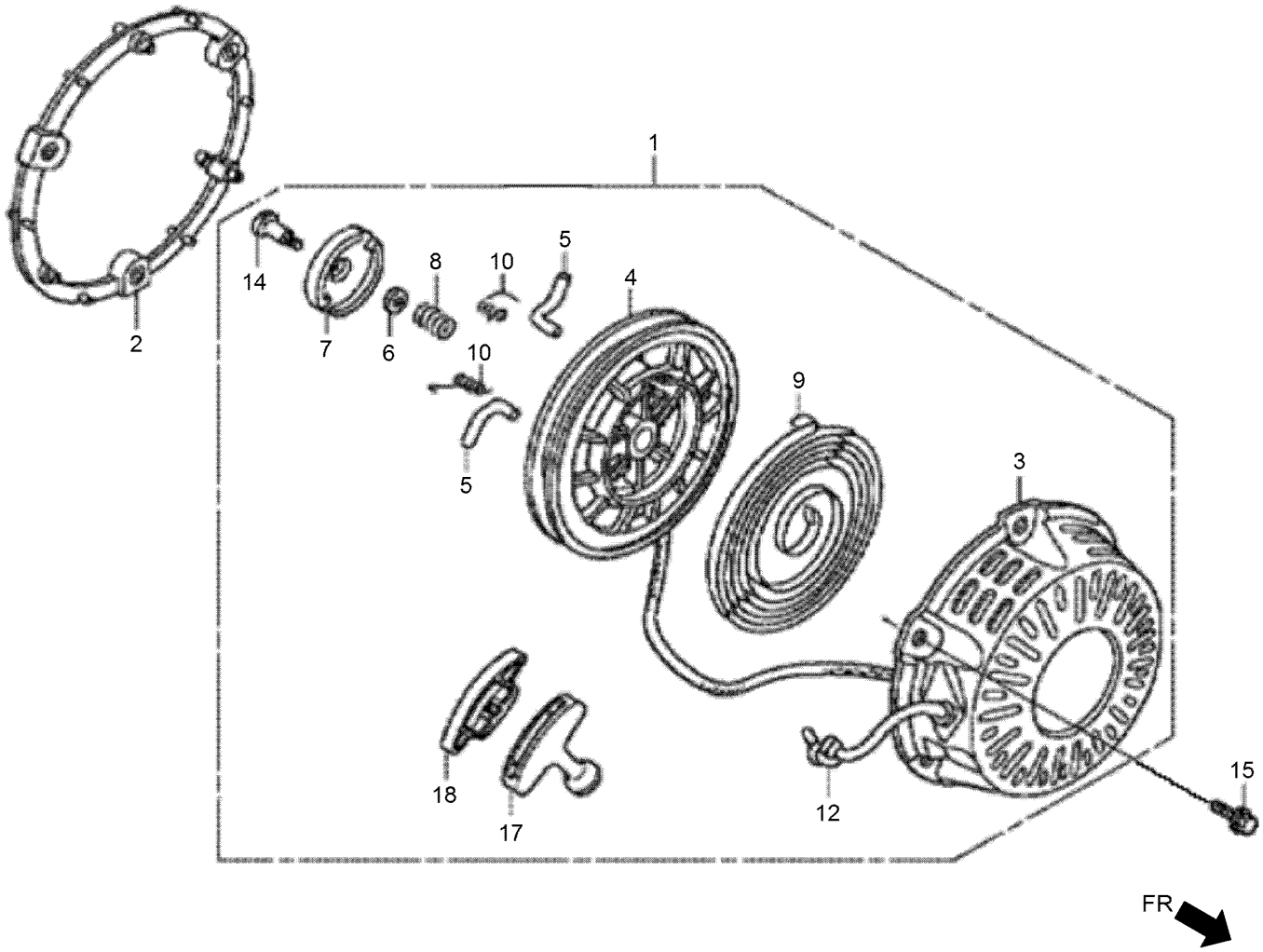

Recoil Starter Assembly (continued)

Ref.	Part Number	Qty.	Description
1	138-9123	1	Starter ASM-Recoil
2	132-0485	1	Spacer-Recoil Starter Mtg
3	132-0486	1	Recoil Starter Case ASM (R280)
4	132-0489	1	Reel-Recoil Starter
5	132-0491	2	Ratchet-Starter
6	132-0492	1	Plate-Friction
7	132-0493	1	Guide-Ratchet
8	132-0494	1	Spring-Friction
9	132-0495	1	Spring-Recoil Starter
10	132-0497	2	Spring-Return
12	132-0507	1	Rope-Recoil Starter
14	132-0579	1	Screw-Setting
15	131-8223	3	Bolt-Flange-6X18
17	132-0502	1	Knob-Recoil Starter
18	132-0509	1	Knob-Reinforcement

Fan Cover Assembly

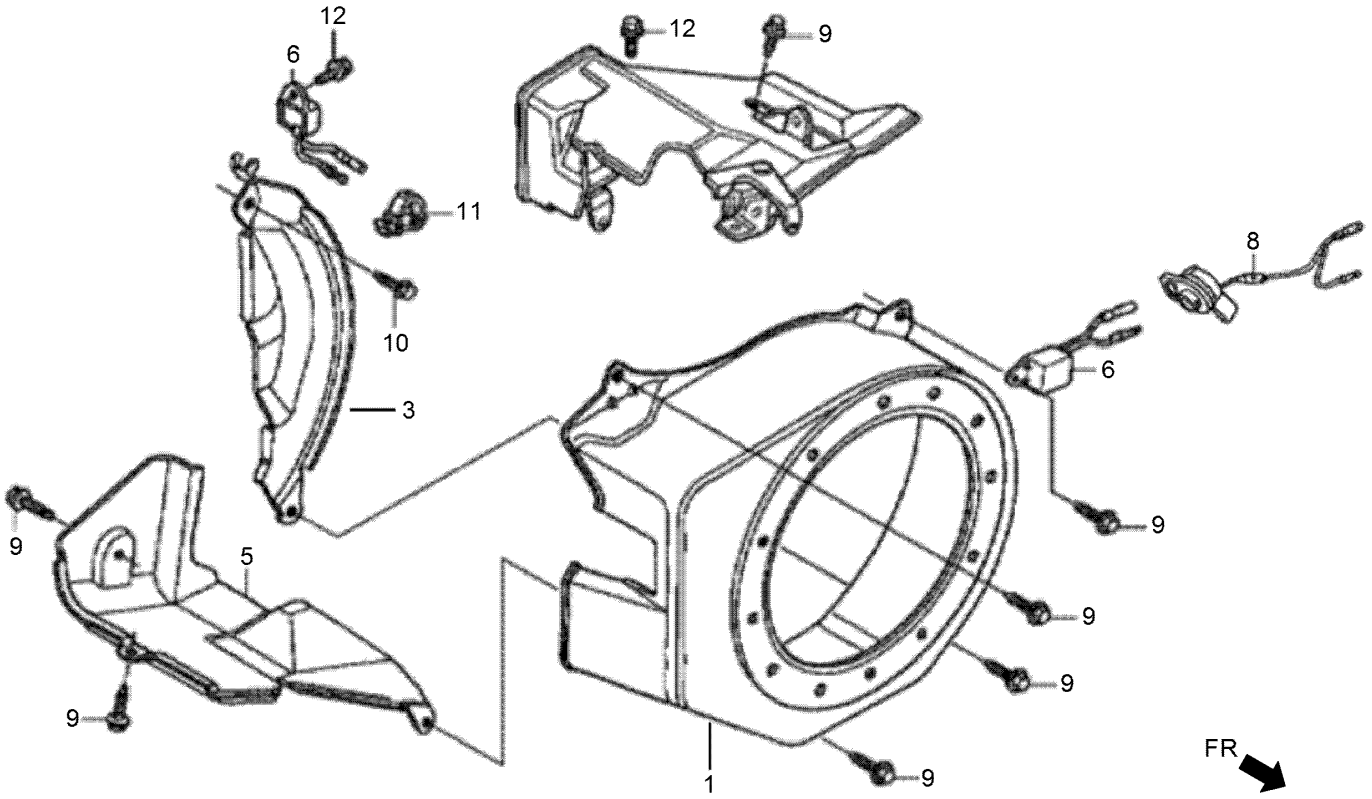

Fan Cover Assembly (continued)

Ref.	Part Number	Qty.	Description
1	132-0464	1	Fan Cover ASM (R280)
3	132-0469	1	Side Plate ASM
5	132-0473	1	Shroud ASM
6	132-0529	1	Alert Unit-Oil
8	132-0530	1	Switch ASM-Engine Stop
9	132-4880	6	Bolt-Flange-6X12
10	132-0605	1	Bolt-Flange-6X20
11	132-0641	1	Clip-Harness
12	131-8220	1	Bolt-Flange-6X8

Carburetor Assembly

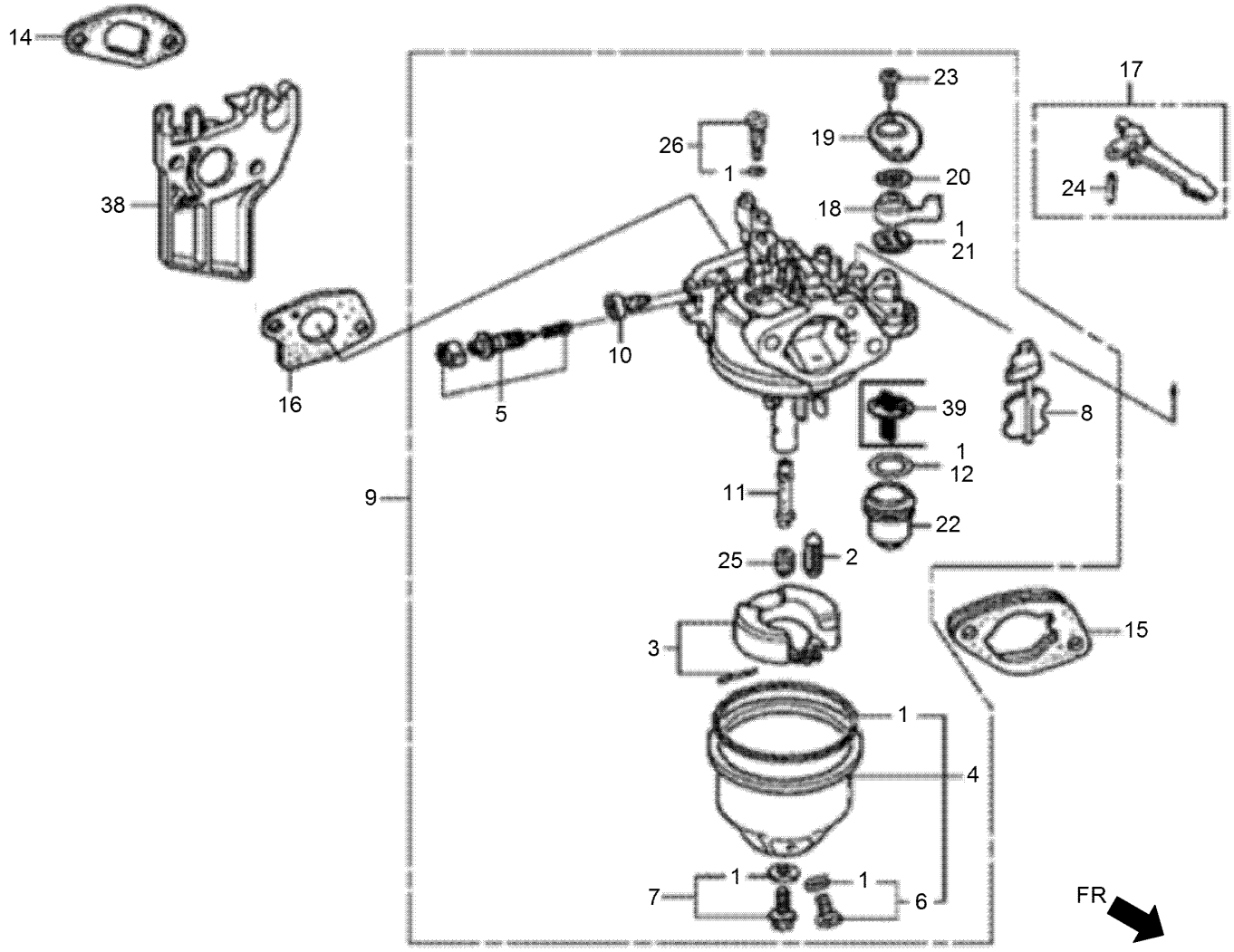

Carburetor Assembly (continued)

Ref.	Part Number	Qty.	Description
1	132-0239	1	Gasket Set
2	132-0241	1	Valve Set-Float
3	132-0242	1	Float Set
4	132-0247	1	Chamber Set-Float
5	132-0250	1	Screw Set-Pilot
6	132-0251	1	Screw Set-Drain
7	132-0253	1	Screw Set
8	132-0257	1	Choke Set
9	132-0265	1	Carburetor ASM
10	132-0268	1	Screw-Throttle Stop
11	132-0272	1	Nozzle-Main
12	132-0276	1	Packing-Fuel Strainer Cup
14	132-0281	1	Packing-Insulator
15	132-0284	1	Carburetor Spacer ASM
16	132-0287	1	Packing-Carburetor
17	132-0343	1	Choke Lever ASM
18	132-0359	1	Lever-Cock
19	132-0360	1	Plate-Lever Setting
20	132-0362	1	Spring-Cock Lever
21	132-0364	1	Packing-Fuel Cock
22	132-0366	1	Cup-Fuel Strainer
23	132-0676	2	Screw-Pan-3X6
24	132-0698	1	Pin-Spring-2X12
25	131-8237	1	Jet-Main, No. 75
26	131-8239	1	Jet Set-Pilot, No. 40
38	132-0278	1	Insulator-Carburetor
39	132-0365	1	Filter-Cup

Air Cleaner Assembly

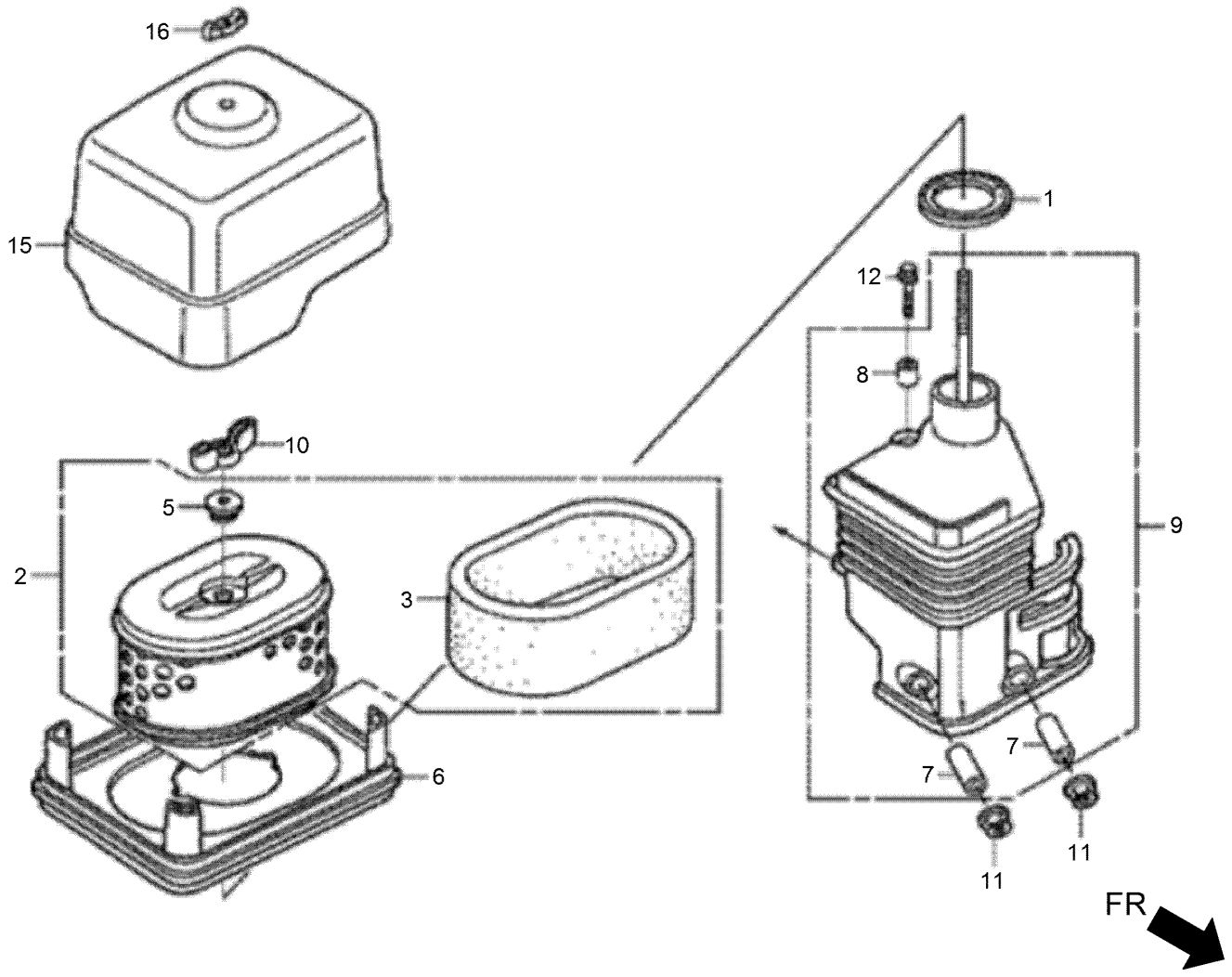

Air Cleaner Assembly (continued)

Ref.	Part Number	Qty.	Description
1	132-0291	1	Packing-Elbow
2	132-0367	1	Element-Air Cleaner
3	132-0372	1	Filter-Outer
5	132-0391	1	Grommet-Air Cleaner
6	132-0392	1	Nose-Silencer
7	132-0393	2	Collar-Air Cleaner
8	132-0394	1	Collar B-Air Cleaner
9	132-0396	1	Elbow Comp-Air Cleaner
10	132-0631	1	Nut-Tool Box Setting
11	132-4881	2	Nut-Flange-6Mm
12	131-8224	1	Bolt-Flange-6X20
15	132-0388	1	Cover-Air Cleaner
16	132-0630	1	Nut-Air Cleaner

Muffler Assembly

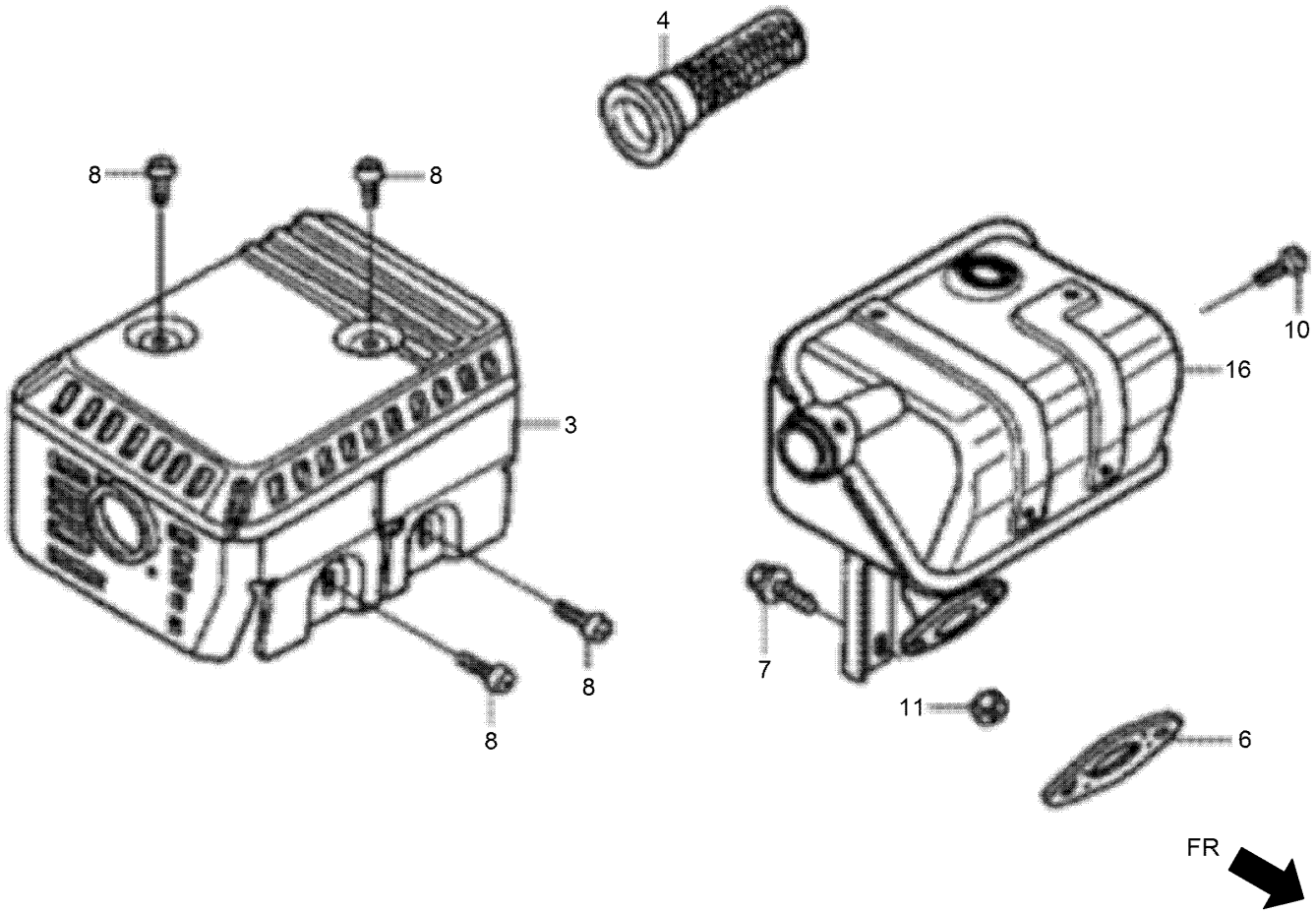

Muffler Assembly (continued)

Ref.	Part Number	Qty.	Description
3	132-0453	1	Muffler Protector ASM
4	132-0456	2	Arrester-Spark
6	132-0457	2	Gasket-Muffler
7	132-0600	1	Bolt-Flange-6X13
8	132-0616	4	Screw-Tapping-5X8
10	132-0617	1	Screw-Tapping-4X6
11	132-0684	2	Nut-Hex-8Mm
16	132-0446	1	Muffler ASM

Fuel Tank Assembly

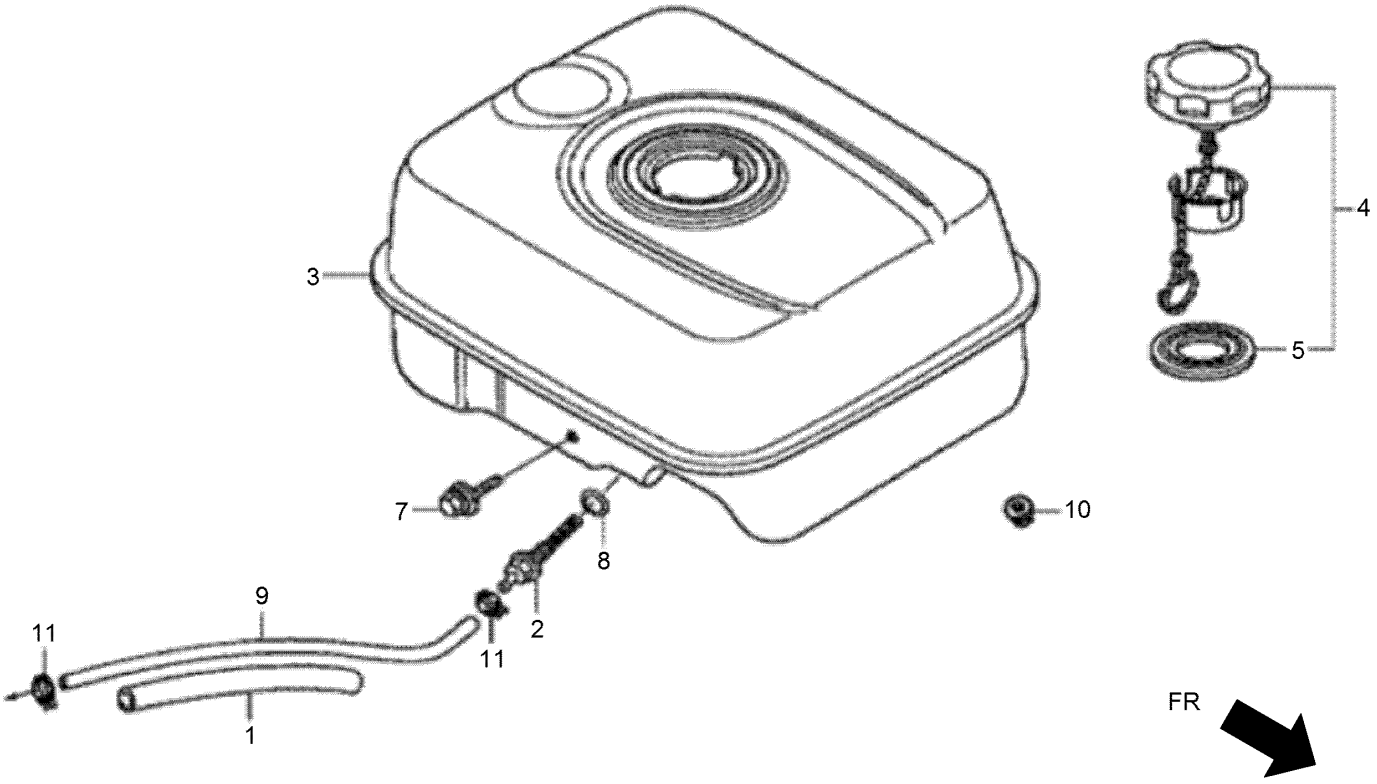

Fuel Tank Assembly (continued)

Ref.	Part Number	Qty.	Description
1	132-0349	1	Rubber-Supporter
2	132-0361	1	Joint-Fuel Tank
3	132-0397	1	Fuel Tank ASM (Nh31)
4	132-0414	1	Fuel Filler Cap ASM
5	132-0431	1	Packing-Fuel Filler Cap
7	132-0583	1	Bolt-Flange-6X34
8	132-0668	1	O-Ring-14Mm
9	132-0669	1	Tube-Fuel-4.5X145
10	132-4881	2	Nut-Flange-6Mm
11	131-8211	2	Clamp-Tube

Flywheel Assembly

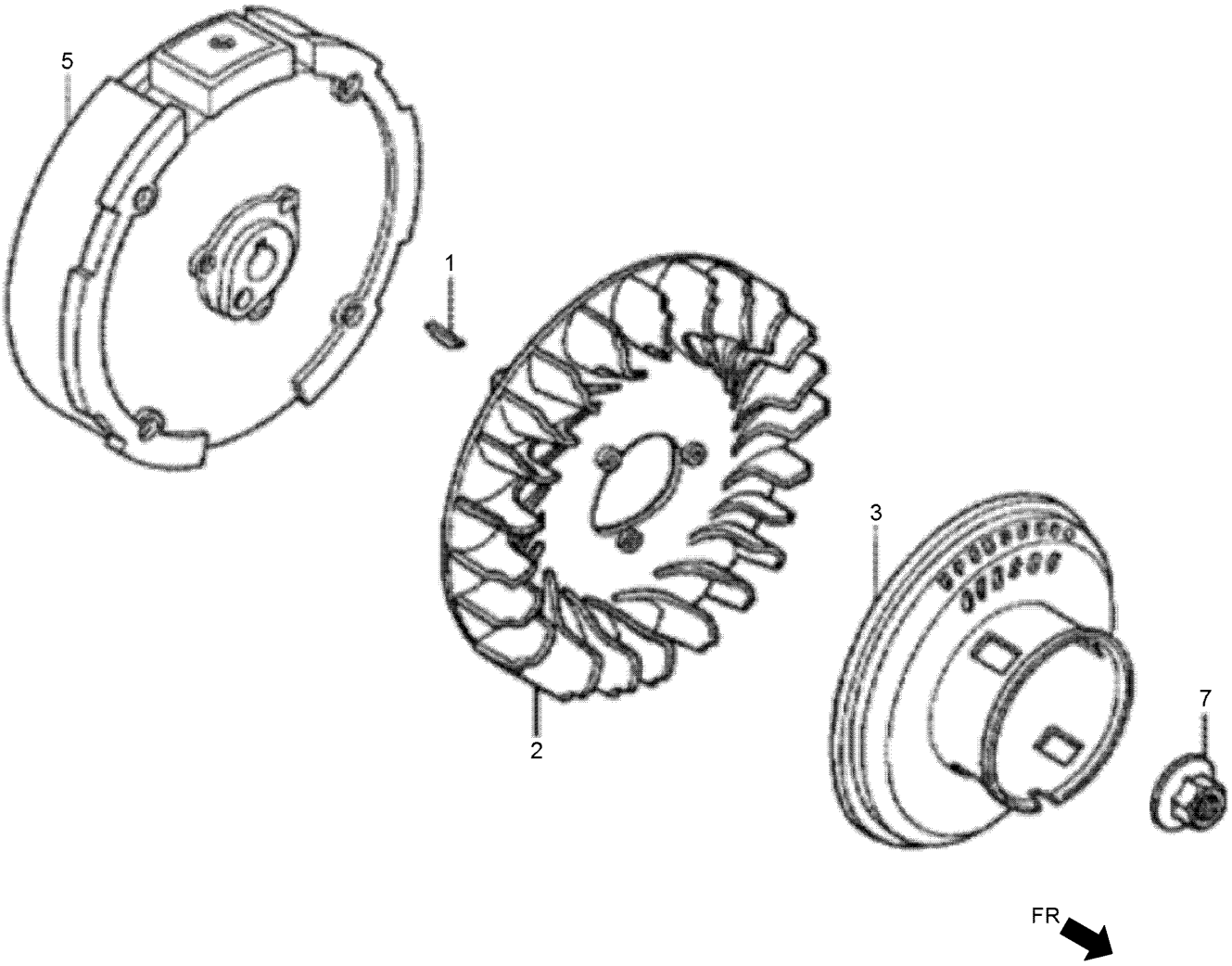

Flywheel Assembly (continued)

Ref.	Part Number	Qty.	Description
1	132-0167	1	Key-Special Woodruff-25X18
2	132-0461	1	Fan-Cooling
3	132-0499	1	Starter Pulley ASM
5	132-0519	1	Flywheel ASM
7	132-0625	1	Nut-Special-14Mm

Ignition Coil Assembly

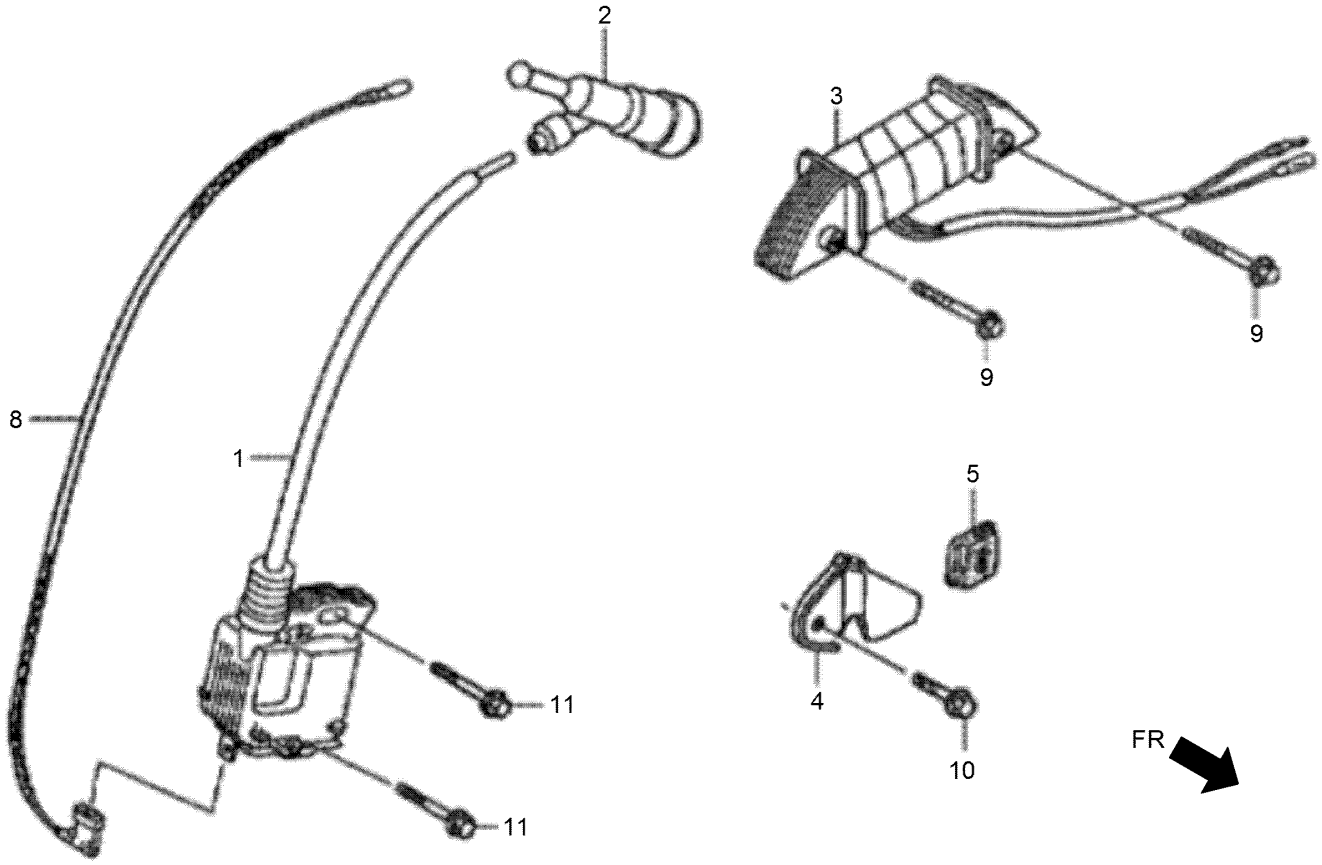

Ignition Coil Assembly (continued)

Ref.	Part Number	Qty.	Description
1	132-0510	1	Coil ASM-Ignition
2	132-0515	1	Cap ASM-Noise Suppressor
3	132-0521	1	Coil ASM-Lamp
4	132-0522	1	Clamper-Cord
5	132-0523	1	Grommet-Cord
8	132-0533	1	Cord-Stop Switch
9	132-0596	2	Bolt-Flange-6X28
10	132-0604	1	Bolt-Flange-5X10
11	132-0620	2	Bolt-Flange-6X25

Control Assembly

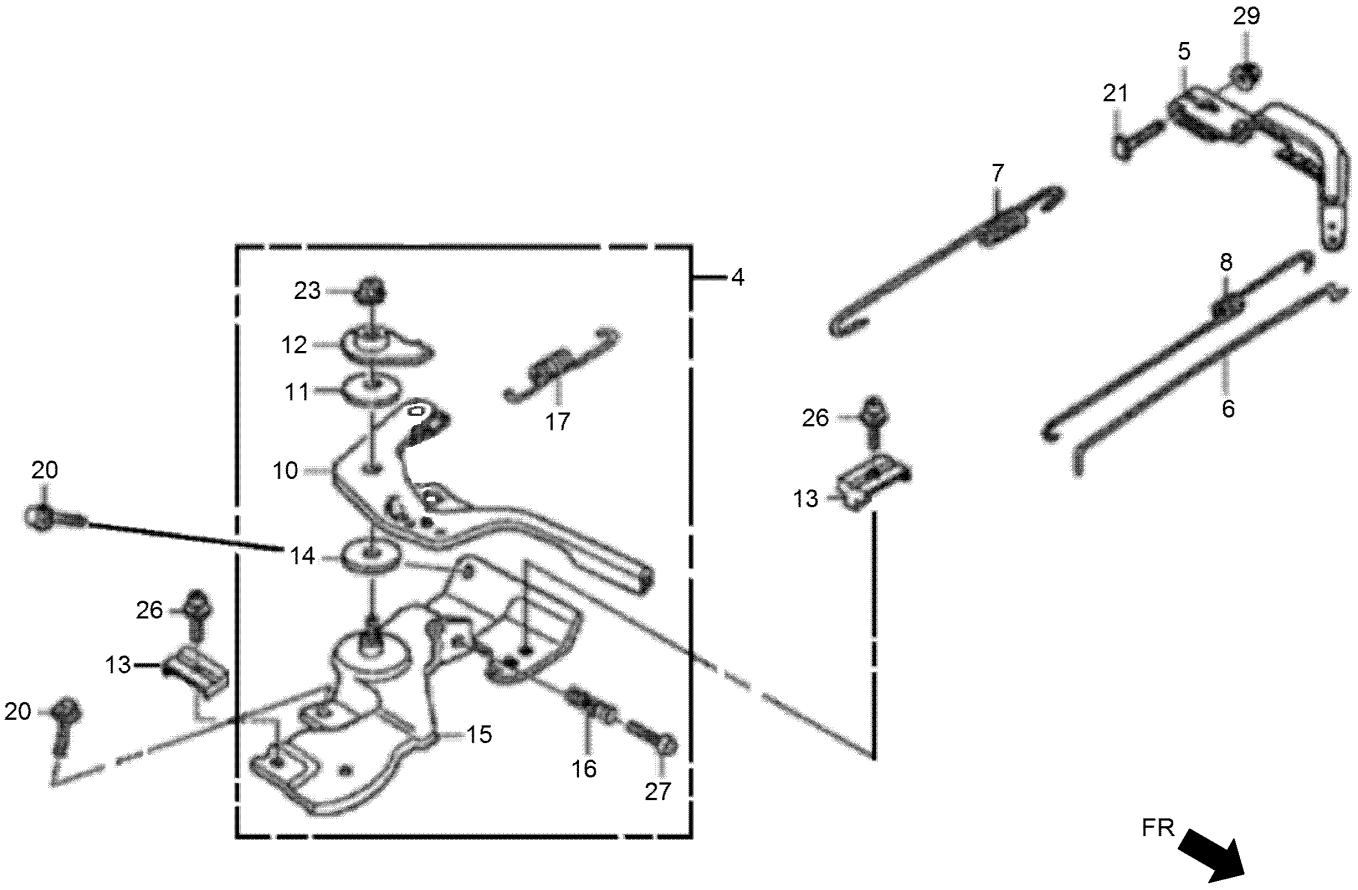

Control Assembly (continued)

Ref.	Part Number	Qty.	Description
4	132-0292	1	Control ASM
5	132-0311	1	Arm-Governor
6	132-0316	1	Rod-Governor
7	132-0320	1	Spring-Governor
8	132-0324	1	Spring-Throttle Return
10	132-0328	1	Lever-Control
11	132-0329	1	Spring-Lever
12	132-0330	1	Washer-Control Lever
13	132-0331	1	Holder-Cable
14	132-0332	1	Spacer-Control Lever
15	132-0337	1	Control Base ASM
16	132-0340	1	Spring-Control Adjusting
17	132-0341	1	Spring-Cable Return
20	132-4880	2	Bolt-Flange-6X12
21	132-0597	1	Bolt-Governor Arm
23	132-0619	1	Nut-Self-Lock-6Mm
26	132-0678	1	Screw-Pan-5X16
27	132-0679	1	Screw-Pan-5X25
29	132-4881	1	Nut-Flange-6Mm

Label Assembly

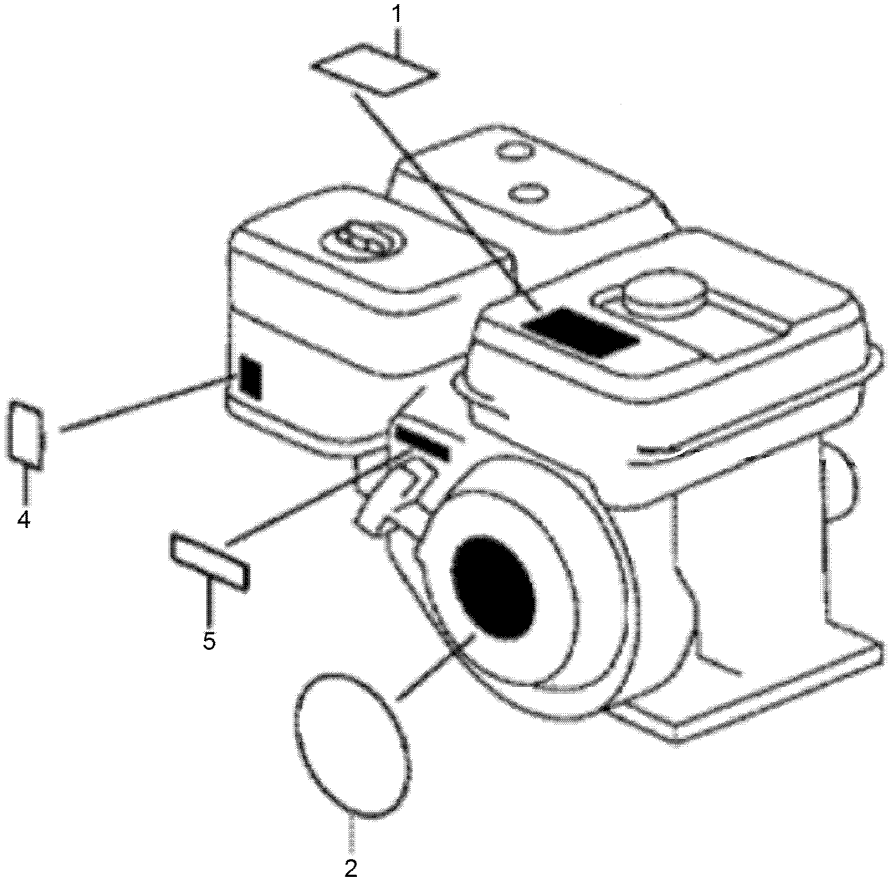

Label Assembly (continued)

Ref.	Part Number	Qty.	Description
1	132-0559	1	Mark-Operator Caution
2	132-0561	1	Emblem
4	132-0566	1	Mark-Choke
5	132-0567	1	Mark-Throttle Indication

Wrench

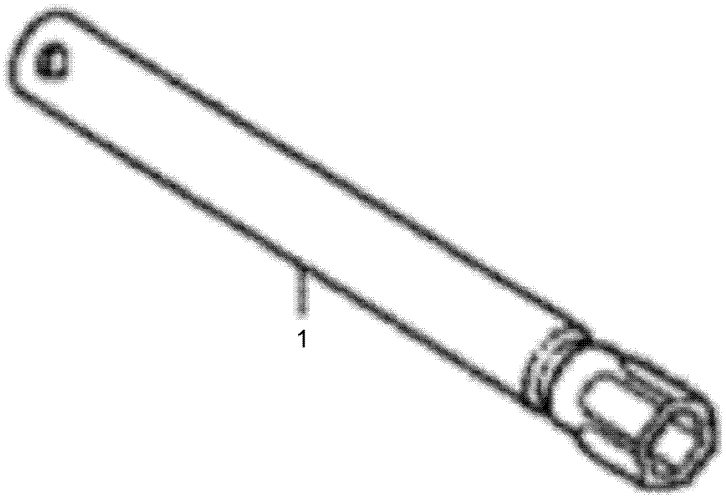

Wrench (continued)

Ref.	Part Number	Qty.	Description
1	132-0572	1	Wrench-Spark Plug

Decal Assembly

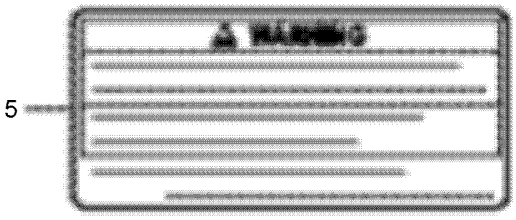

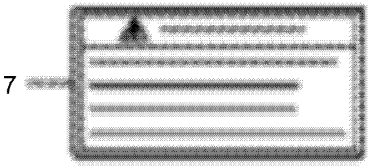

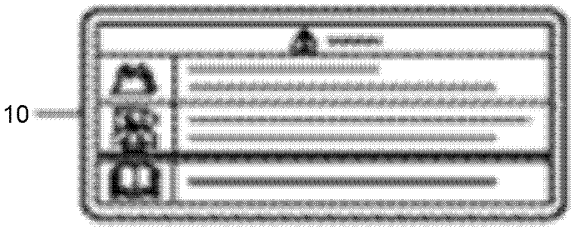

Decal Assembly (continued)

Ref.	Part Number	Qty.	Description
5	132-0552	1	Mark-Operator Caution (English)
5	132-0553	1	Mark-Operator Caution (French)
7	132-0570	1	Mark-Exhaust Caution (English)
7	132-0571	1	Mark-Exhaust Caution (French)
10	132-0557	1	Mark-Operator Caution (Chinese)

Gasket Kit

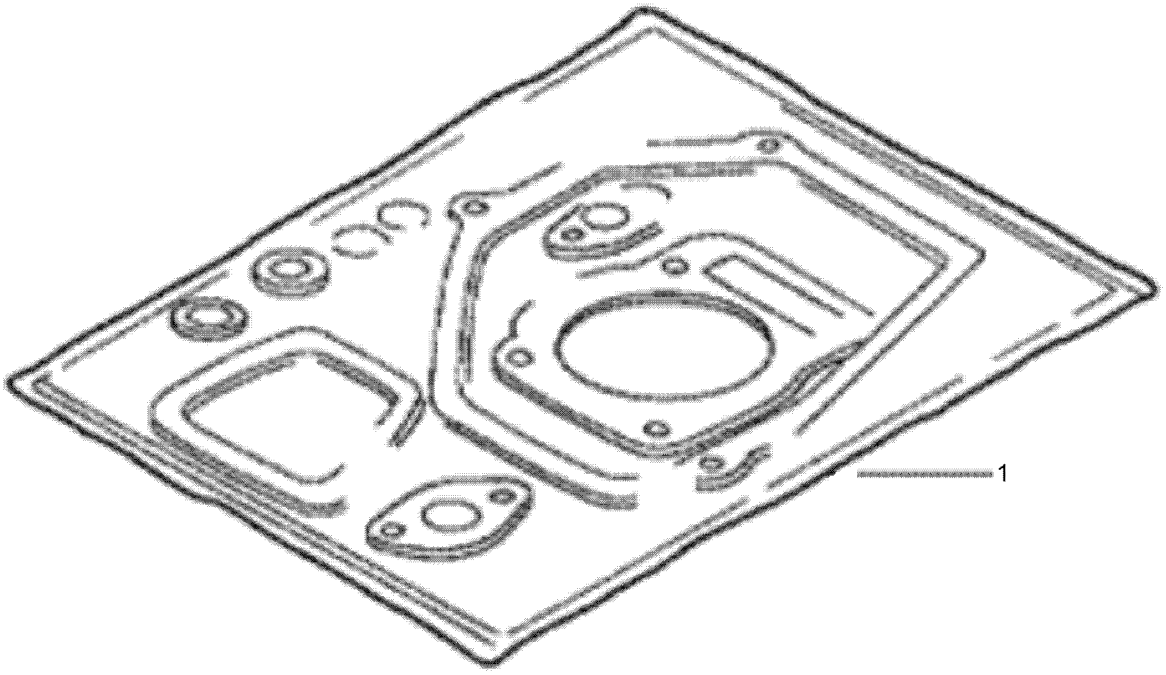

Gasket Kit (continued)

Ref.	Part Number	Qty.	Description
1	132-0100	1	Gasket Kit

Attachments and Accessories

For 44913 GreensPro 1260 Greens Roller

Product Name	Model/Part
Filter-Oil, Hyd	1-633750
Premium All Season Hydraulic Fluid (5 Gallon Pail)	108-1178
Premium Engine Oil 10w30 (5 Gallon Pail)	121-6393
Roller Scraper Kit	44911
Wireless Hour Meter Kit	44927

Notes:

TORO®

Count on it.