Form No. 3431-294 Rev B

TORO®

Count on it.

Parts Catalog

# GreensPro® 1260

## Greens Roller

**Model No. 44913—Serial No. 404476534 and Up**

Register at www.Toro.com.
Original Instructions (EN)

CE

*3431-294* B

# Ordering Replacement Parts

To order replacement parts, please supply the part number, the quantity, and the description of each part desired.

### Understanding Reference Numbers

Each identified part in an illustration has a reference number. The reference number for a part also appears in the parts list, along with other information about the part.

This catalog uses two special reference number formats, one to indicate parts in a service assembly and another to indicate the quantity of a given part in an illustration.

### Service Assembly Reference Numbers

Parts in service assemblies have reference numbers in the form a:b. The a represents the reference number of the entire service assembly and the b represents a sequential number unique to each part within the service assembly.

For example, a wheel assembly might be identified by reference number 6, the tire by 6:1, the valve by 6:2, and the wheel by 6:3. When you order the assembly identified by reference number 6, you receive all parts identified by reference numbers 6:1,6:2, and 6:3. However, you may also order any part individually. Reference numbers of this type appear in illustration and in parts lists.

### Reference Numbers Indicating Quantity

In an illustration, if a reference number indicates more than one part, the reference number has the form nX y. The n represents the quantity of the part, the X is the multiplication symbol, and the y represents the reference number.

For example, in an illustration, the reference number 2X 37 means that two of the parts identified by reference number 37 are indicated.

# Contents

Steering Assembly . . . . . 4
Roller Chassis Assembly No. 133-1720 . . . . . 6
Complete Long Steering Roller Assembly No. 127-7958 . . . . . 8
Complete Short Steering Roller Assembly No. 127-7963 . . . . . 9
Oil Tank and Hose Assembly . . . . . 10
Roller Drive Assembly . . . . . 12
Hydraulic Motor Assembly No. 131-6431 . . . . . 14
Engine Assembly . . . . . 16
Tire Assembly . . . . . 18
Lifting Mechanism Assembly . . . . . 20
Seat Assembly . . . . . 22
Steering Wheel Assembly . . . . . 24
Parking Brake Assembly . . . . . 26
Control Assembly . . . . . 28
Hydraulic Pump Assembly No. 132-4797 . . . . . 30
Cylinder Head Assembly . . . . . 32
Cylinder Barrel Assembly . . . . . 34
Crankcase Cover Assembly . . . . . 36
Crankshaft Assembly . . . . . 38
Piston and Connecting Rod Assembly . . . . . 40
Camshaft Assembly . . . . . 42
Recoil Starter Assembly . . . . . 44
Fan Cover Assembly . . . . . 46
Carburetor Assembly . . . . . 48
Air Cleaner Assembly . . . . . 50
Muffler Assembly . . . . . 52
Fuel Tank Assembly . . . . . 54
Flywheel Assembly . . . . . 56
Ignition Coil Assembly . . . . . 58
Control Assembly . . . . . 60
Label Assembly . . . . . 62
Wrench . . . . . 64
Decal Assembly . . . . . 66
Gasket Kit . . . . . 68
Attachments and Accessories . . . . . 70

**© 2019—The Toro® Company**
**8111 Lyndale Avenue South**
**Bloomington, MN 55420**



**Contact us at www.Toro.com.**
**Printed in the USA.**
**All Rights Reserved**

# Steering Assembly

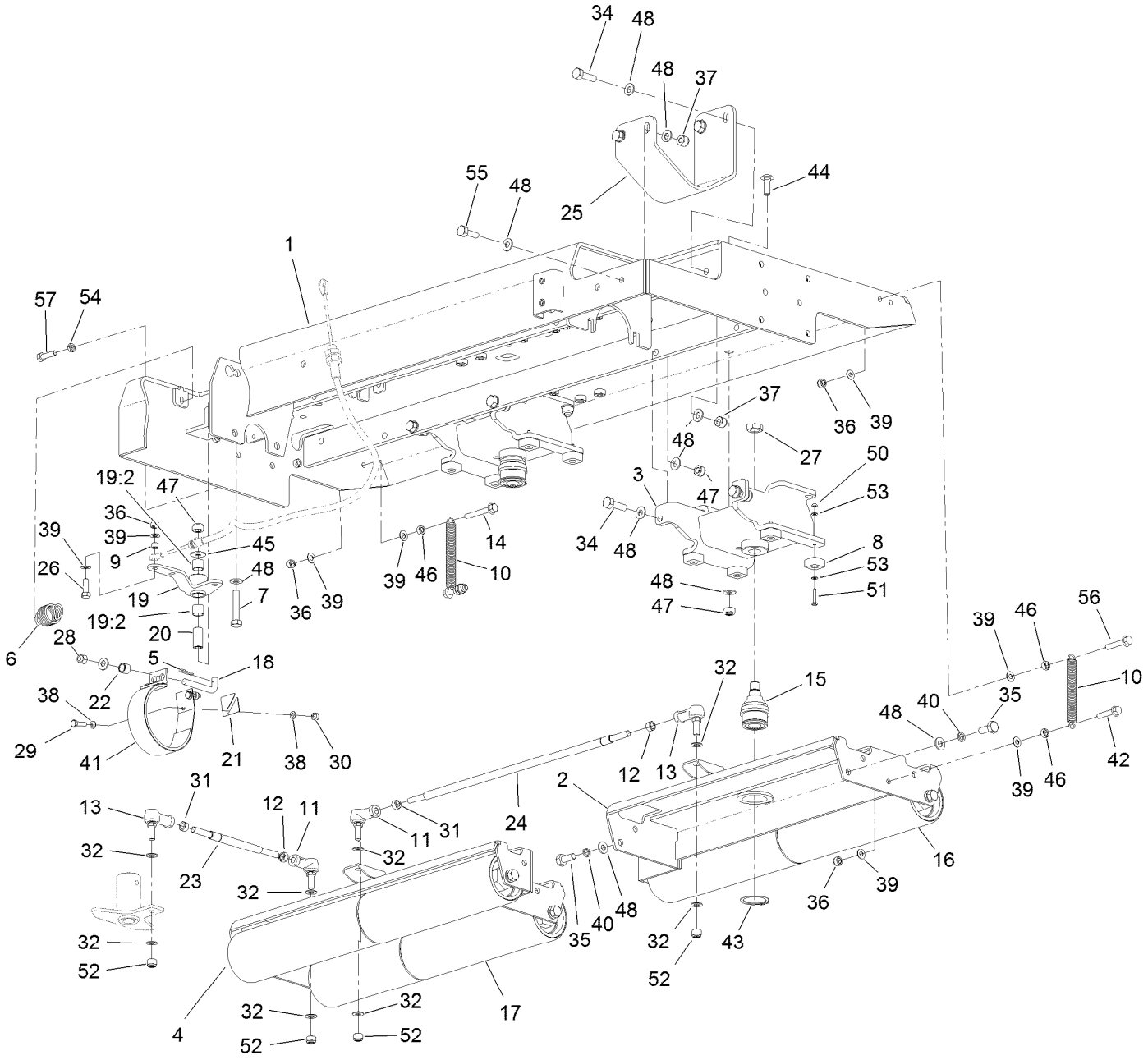

# Steering Assembly (continued)

| Ref. | Part Number | Qty. | Description |
|---|---|---|---|
| 1 | 133-1720 | 1 | Chassis-Roller |
| 2 | 132-4756-01 | 1 | Head-Steering, Rear |
| 3 | 132-4764-01 | 2 | Support-Roller |
| 4 | 132-7082-01 | 1 | Head-Steering, Front |
| 5 | 1-806003 | 1 | Pin-Cotter |
| 6 | 13-3090 | 1 | Spring-Finger |
| 7 | 57-6360 | 1 | Screw-Clutch |
| 8 | 94-1392 | 8 | Pad-Rubber |
| 9 | 108-7983 | 1 | Bushing-Cable |
| 10 | 136-6163 | 2 | Spring |
| 11 | 132-9263 | 2 | Ball Joint |
| 12 | 111-5855 | 2 | Nut-Hex, LH |
| 13 | 132-9264 | 2 | Joint-Ball |
| 14 | 33104-060 | 1 | Screw-HHF |
| 15 | 121-3605 | 2 | Ball Joint |
| 16 | 127-7958 | 2 | Complete Long Steering Roller ASM |
| 17 | 127-7963 | 2 | Complete Short Steering Roller ASM |
| 18 | 131-1584 | 1 | Rod-Brake |
| 19 | 136-6249 | 1 | Brake Pivot ASM |
| 19:2 | 256-311 | 2 | Bushing-Split |
| 20 | 131-6350 | 1 | Bushing-Pivot |
| 21 | 131-6353 | 1 | Shim |
| 22 | 131-6367 | 1 | Spacer |
| 23 | 132-7085 | 1 | Rod-Pivot, Steering |
| 24 | 132-7087 | 1 | Rod-Pivot, Steering |
| 25 | 132-7096-03 | 1 | Guard-Motor |
| 26 | 03162 | 1 | Screw-HH |
| 27 | 3220-6 | 2 | Nut-Jam |
| 28 | 3296-39 | 1 | Nut-Lock, NI |
| 29 | 09044 | 2 | Screw-Set |
| 30 | 09201 | 2 | Nut |
| 31 | 09213 | 2 | Nut |
| 32 | 09271 | 8 | Washer-Plain |
| 34 | 09394 | 6 | Bolt |
| 35 | 09395 | 8 | Screw-HH |
| 36 | 09441 | 5 | Nut-Hex, NI |
| 37 | 09447 | 4 | Nut |
| 38 | 09472 | 4 | Washer-Plain |
| 39 | 09475 | 10 | Washer |
| 40 | 09480 | 8 | Washer-Lock |
| 41 | 9593 | 1 | Brake Band ASM |
| 42 | 33104-040 | 2 | Screw-HHF |
| 43 | 32151-104 | 2 | Ring-Retaining, External |
| 44 | 33125-030 | 3 | Screw-CARR |
| 45 | HY03355 | 1 | Washer-Plated |
| 46 | ZNH1H000U | 4 | Nut-Hex |
| 47 | ZNN1J000U | 8 | Nut-Hex, NI |
| 48 | ZWQ1J000U | 29 | Washer-Plain |
| 50 | 09746 | 8 | Nut-Lock |
| 51 | 09806 | 8 | Setscrew |
| 52 | 09216 | 4 | Nut-Hex, NI |
| 53 | ZWP1E000U | 16 | Washer |
| 54 | 117-4059 | 2 | Nut-Hex |
| 55 | 09392 | 2 | Screw-HH |
| 56 | 33104-045 | 1 | Screw-HHF |
| 57 | 09369 | 2 | Screw-HH |

# Roller Chassis Assembly No. 133-1720

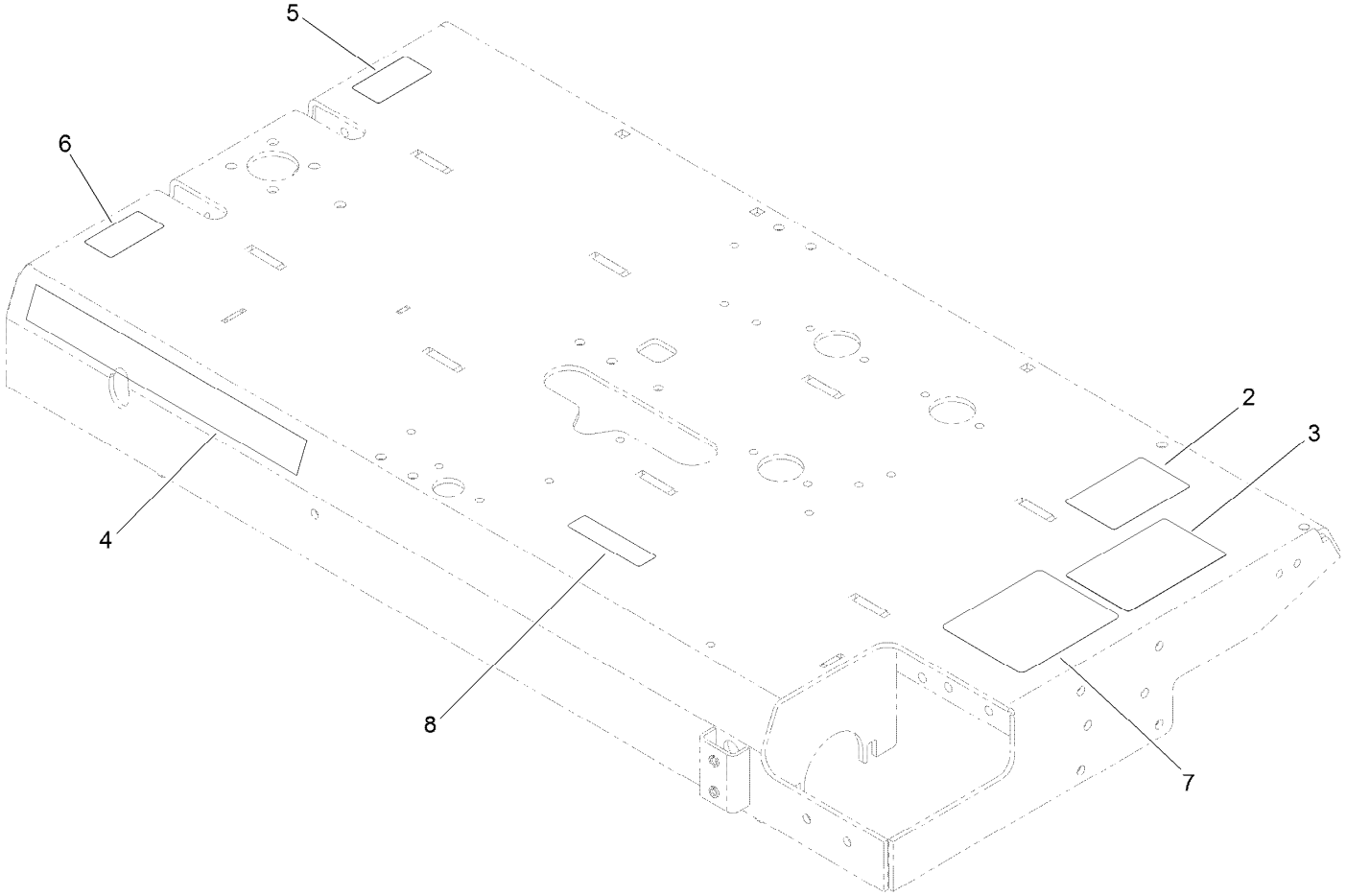

# Roller Chassis Assembly No. 133-1720 (continued)

| Ref. | Part Number | Qty. | Description |
|---|---|---|---|
| 2 | 133-1701 | 1 | Decal-Warning |
| 3 | 127-5884 | 1 | Decal-Operation |
| 4 | 132-9298 | 2 | Decal |
| 5 | 111-5650 | 1 | Decal-Control, Pedal (RH) |
| 6 | 111-5649 | 1 | Decal-Control, Pedal (LH) |
| 7 | 132-9299 | 1 | Decal-Service |
| 8 | 111-5646 | 1 | Decal-Warning |

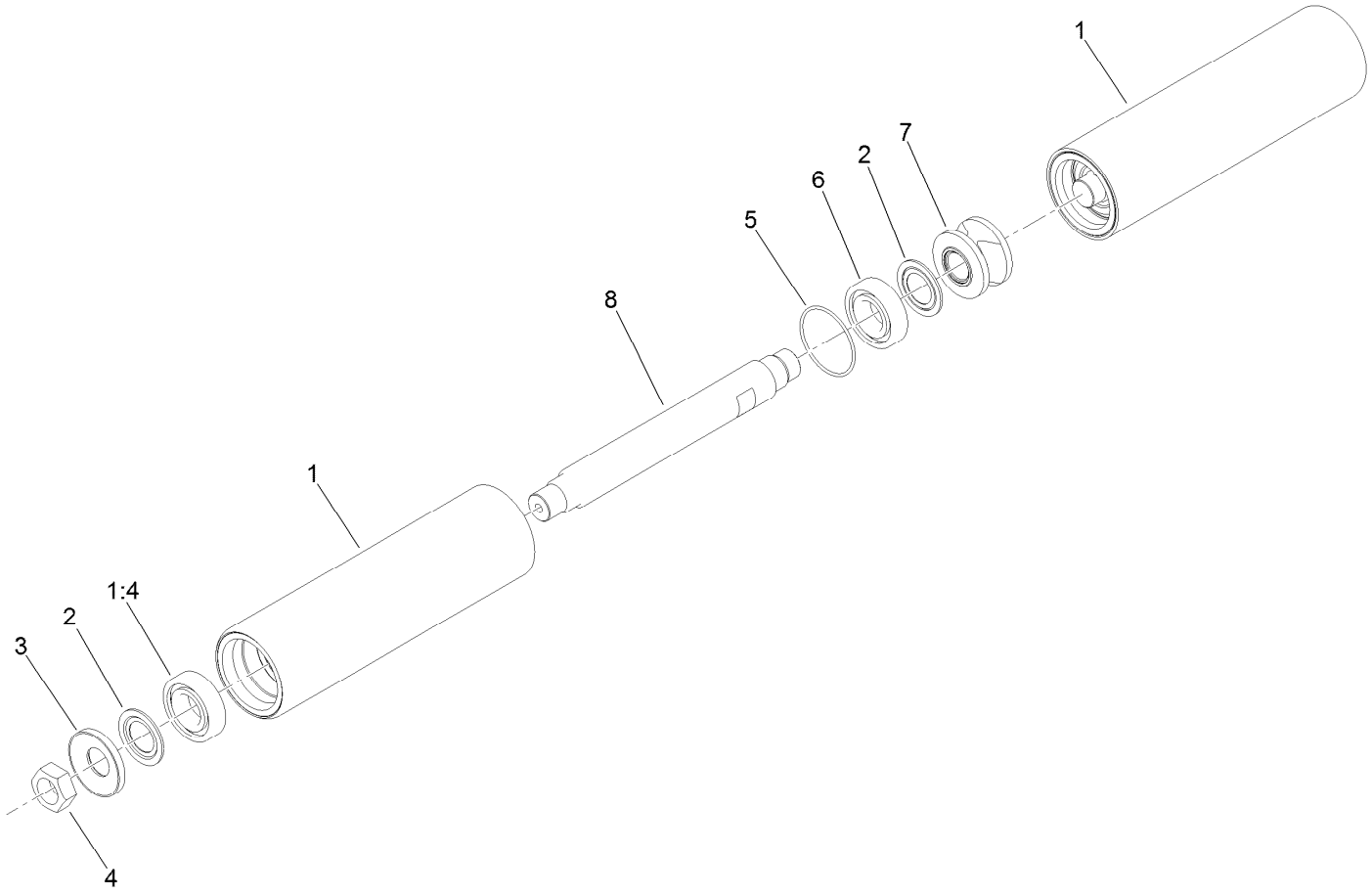


# Complete Long Steering Roller Assembly No. 127-7958

| *Ref.* | *Part Number* | *Qty.* | *Description* |
|---|---|---|---|
| 1 | 127-7966 | 2 | Long Steering Roller ASM |
| 1:4 | 115-3296 | 1 | Bearing-Sealed |
| 2 | 115-3299 | 4 | Seal-Flocked |
| 3 | 127-7959 | 2 | Spacer-Bearing |
| 4 | 3296-49 | 2 | Nut-Lock, NI |
| 5 | 117-8177 | 2 | O-Ring |
| 6 | 115-3296 | 2 | Bearing-Sealed |
| 7 | 127-7960 | 1 | Sleeve-Roller |
| 8 | 127-8029 | 2 | Shaft-Roller |

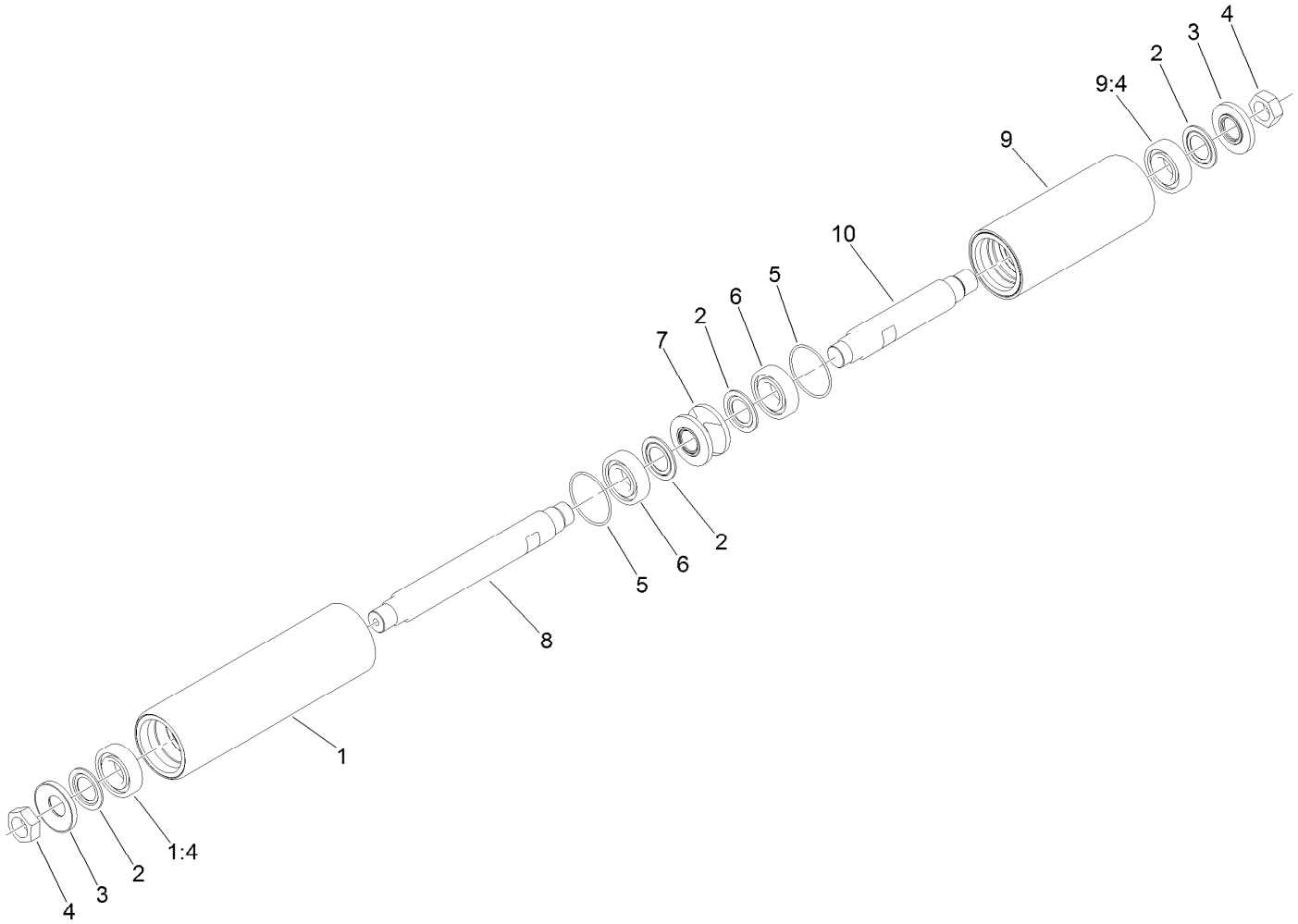


# Complete Short Steering Roller Assembly No. 127-7963

| *Ref.* | *Part Number* | *Qty.* | *Description* |
|---|---|---|---|
| 1 | 127-7966 | 1 | Long Steering Roller ASM |
| 1:4 | 115-3296 | 1 | Bearing-Sealed |
| 2 | 115-3299 | 4 | Seal-Flocked |
| 3 | 127-7959 | 2 | Spacer-Bearing |
| 4 | 3296-49 | 2 | Nut-Lock, NI |
| 5 | 117-8177 | 2 | O-Ring |
| 6 | 115-3296 | 2 | Bearing-Sealed |
| 7 | 127-7960 | 1 | Sleeve-Roller |
| 8 | 127-8029 | 1 | Shaft-Roller |
| 9 | 127-7967 | 1 | Short Steering Roller Assy |
| 9:4 | 115-3296 | 1 | Bearing-Sealed |
| 10 | 127-8030 | 1 | Shaft-Roller |

# Oil Tank and Hose Assembly

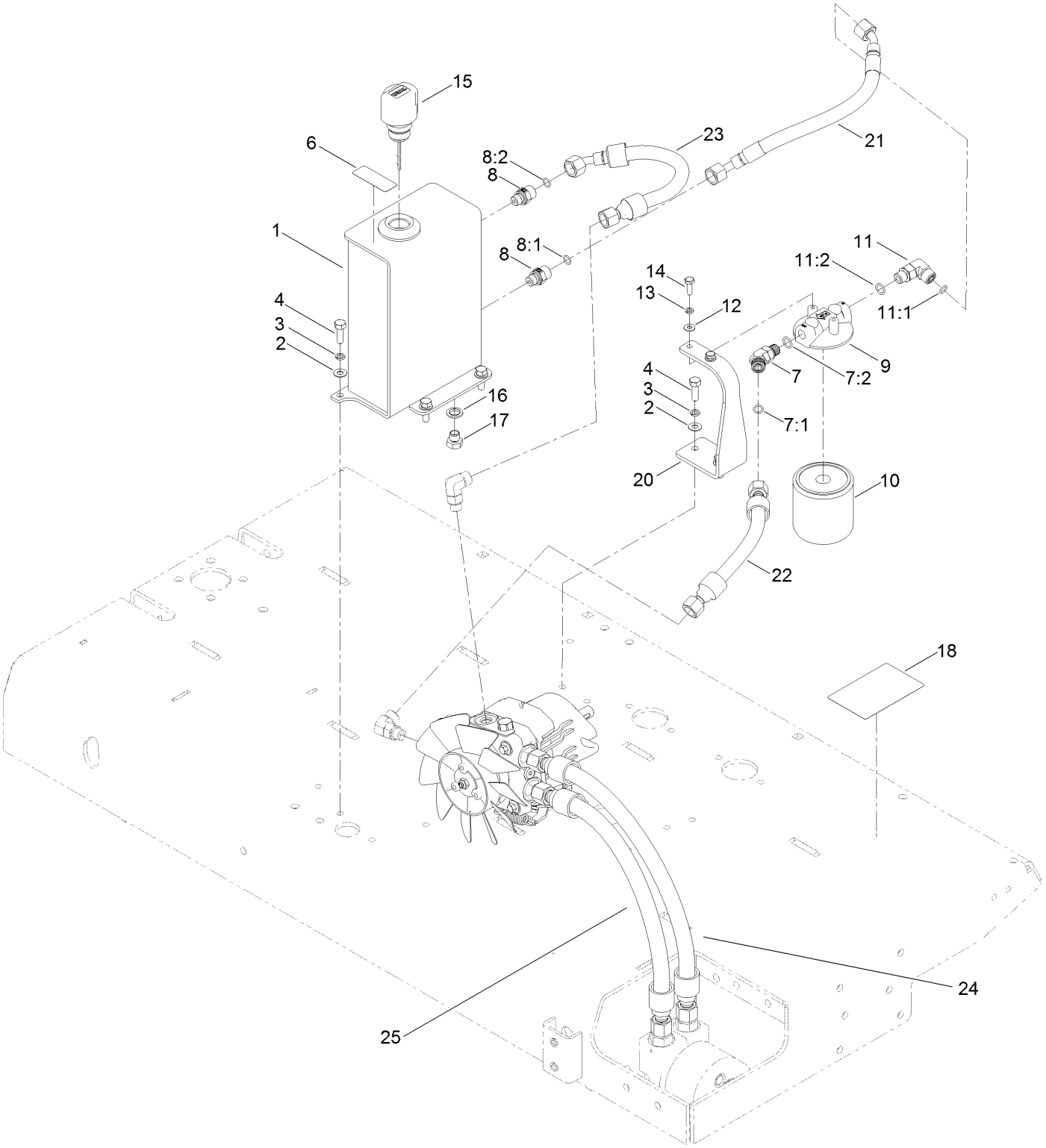

# Oil Tank and Hose Assembly (continued)

| Ref. | Part Number | Qty. | Description |
|---|---|---|---|
| 1 | 132-9269-01 | 1 | Oil Tank |
| 2 | 09475 | 5 | Washer |
| 3 | 03469 | 5 | Washer-Spring |
| 4 | 03162 | 5 | Screw-HH |
| 6 | 93-6686 | 1 | Decal-Oil, HYD |
| 7 | 340-87 | 1 | Fitting-Elbow, 45 DEG |
| 7:1 | 237-22 | 1 | O-Ring |
| 7:2 | 237-42 | 1 | O-Ring |
| 8 | 127-3874 | 2 | Fitting-Straight |
| 8:1 | 237-22 | 1 | O-Ring |
| 8:2 | 138-9105 | 1 | Seal |
| 9 | 104-7836 | 1 | Head-Filter |
| 10 | 1-633750 | 1 | Filter-Oil, HYD |
| 11 | 340-77 | 1 | Fitting-Elbow, 90 DEG |
| 11:1 | 237-22 | 1 | O-Ring |
| 11:2 | 237-42 | 1 | O-Ring |
| 12 | 09261 | 2 | Washer-Plain |
| 13 | 09264 | 2 | Washer-Spring |
| 14 | 09821 | 2 | Screw-HH |
| 15 | 132-9292 | 1 | Breather |
| 16 | 10-06-030 | 1 | Seal-Dowty |
| 17 | 30-06-200 | 1 | Plug-HYD |
| 18 | 133-1701 | 1 | Decal-Warning |
| 20 | 132-9201-01 | 1 | Bracket-Filter |
| 21 | 132-9204 | 1 | Hose ASM |
| 22 | 132-9205 | 1 | Hose ASM |
| 23 | 132-9206 | 1 | Hose ASM |
| 24 | 132-9202 | 1 | Hose ASM |
| 25 | 132-9203 | 1 | Hose ASM |

# Roller Drive Assembly

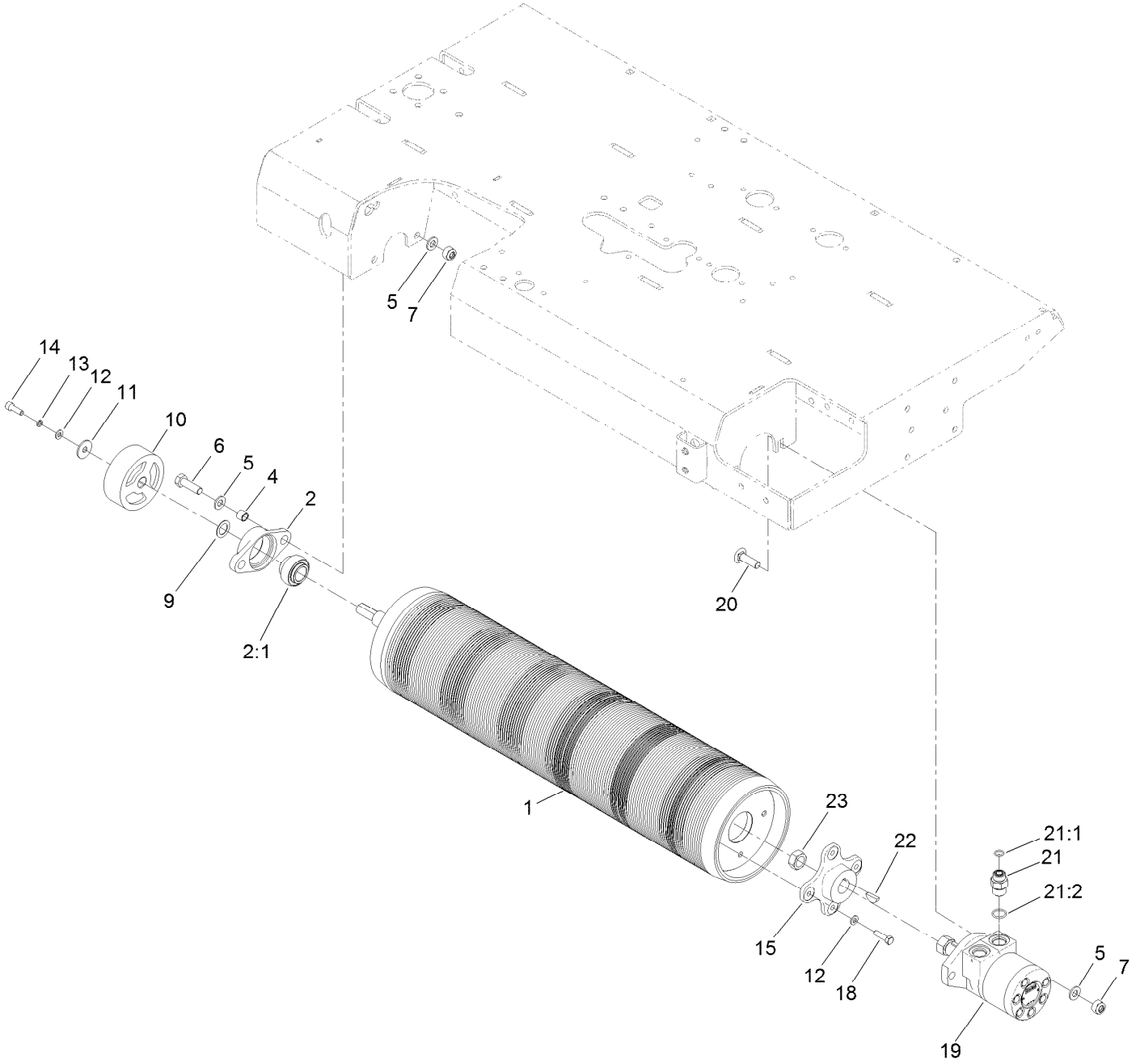

# Roller Drive Assembly (continued)

| Ref. | Part Number | Qty. | Description |
|---|---|---|---|
| 1 | 132-5380 | 1 | Drive-Drum, Roller |
| 2 | 111-5744 | 1 | Bearing ASM |
| 2:1 | 111-5758 | 1 | Bearing |
| 4 | 131-6367 | 2 | Spacer |
| 5 | HY09485 | 6 | Washer-Plain |
| 6 | 63-11-010 | 2 | Bolt-HH |
| 7 | 09650 | 4 | Nut-Hex, Nyloc |
| 9 | 132-9200 | 1 | Spacer |
| 10 | 106719 | 1 | Drum-Brake |
| 11 | 93-8806 | 1 | Washer-Hardened |
| 12 | ZWP1H000U | 5 | Washer-Plain |

| Ref. | Part Number | Qty. | Description |
|---|---|---|---|
| 13 | 03469 | 1 | Washer-Spring |
| 14 | ZCS1H025U | 1 | Screw-HSH |
| 15 | 133-8863 | 1 | Hub-Drive Roller |
| 18 | 09369 | 4 | Screw-HH |
| 19 | 131-6431 | 1 | HYD Traction Motor ASM |
| 20 | 33126-040 | 2 | Screw-CARR |
| 21 | 340-6 | 2 | Fitting-Straight |
| 21:1 | 237-30 | 1 | O-Ring |
| 21:2 | 237-80 | 1 | O-Ring |
| 22 | 3257-8 | 1 | Key-Woodruff |
| 23 | 85-7310 | 1 | Nut-Motor, Wheel |

# Hydraulic Motor Assembly No. 131-6431

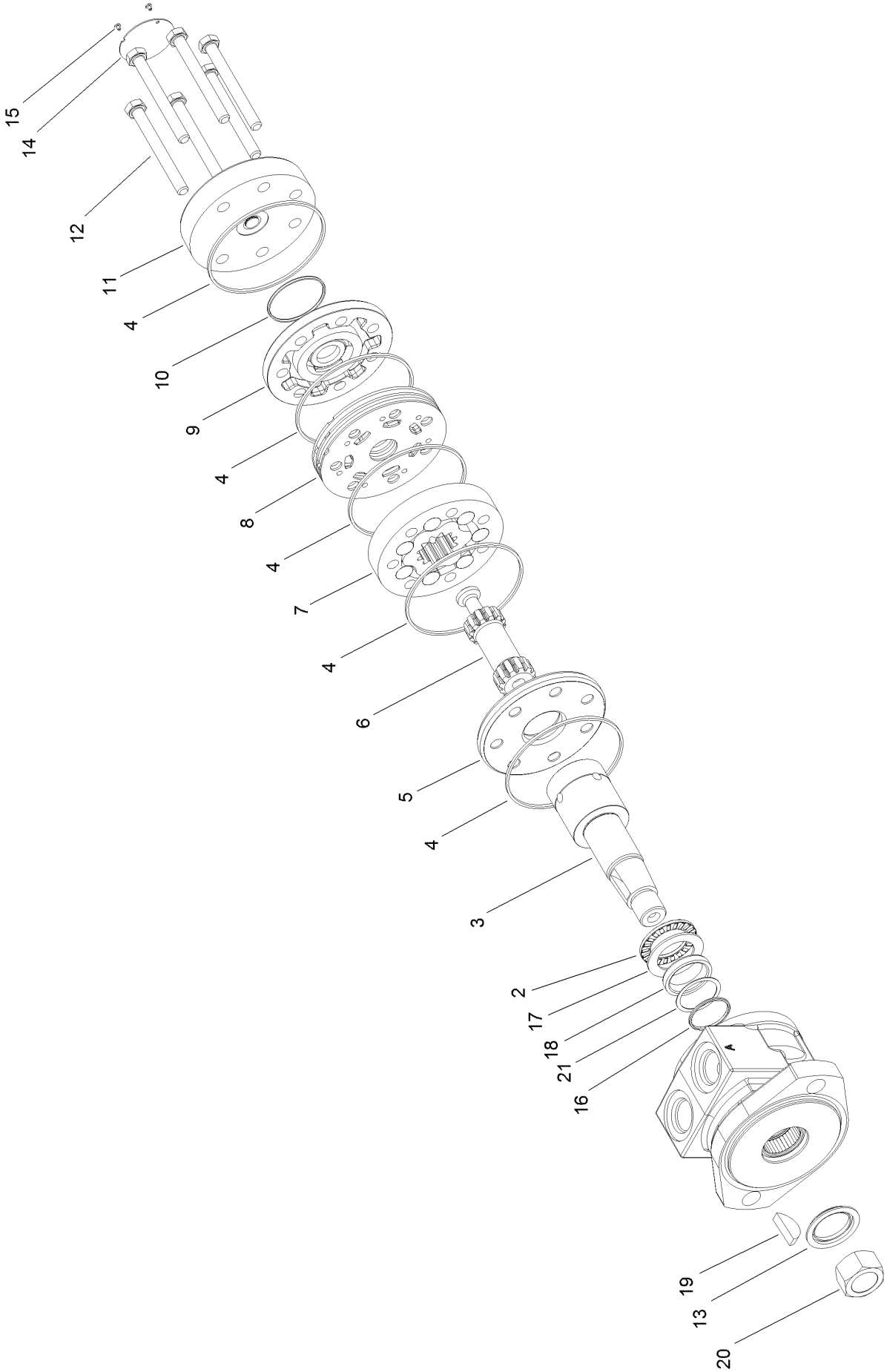

# Hydraulic Motor Assembly No. 131-6431 (continued)

| Ref. | Part Number | Qty. | Description |
|---|---|---|---|
| 2 | 133-1761 | 1 | Bearing-Thrust |
| 3 | 133-1762 | 1 | Shaft-Coupling |
| 4 | 133-1763 | 5 | Ring-Seal |
| 5 | 133-1764 | 1 | Plate-Wear |
| 6 | 133-1765 | 1 | Link-Drive |
| 7 | 133-1766 | 1 | Set-Rotor |
| 8 | 133-1767 | 1 | Manifold |
| 9 | 133-1768 | 1 | Commutator |
| 10 | 133-1769 | 1 | Seal-Commutator |
| 11 | 133-1771 | 1 | Cover-End |
| 12 | 133-1772 | 6 | Special Bolt |
| 13 | 133-1773 | 1 | Seal, Dirt And Water |
| 14 | | 1 | Identification Tag ■ |
| 15 | 133-1774 | 2 | Screw-Drive |
| 16 | 133-1775 | 1 | Ring-Back Up |
| 17 | 133-1776 | 1 | Washer-Thrust |
| 18 | 133-1777 | 1 | Shaft-Seal |
| 19 | 3257-8 | 1 | Key-Woodruff |
| 20 | 85-7310 | 1 | Nut-Motor, Wheel |
| 21 | 133-1778 | 1 | Washer-Back Up |
| 99 | 133-1779 | 1 | Seal Kit ● |

● Not illustrated

■ Not serviced separately

# Engine Assembly

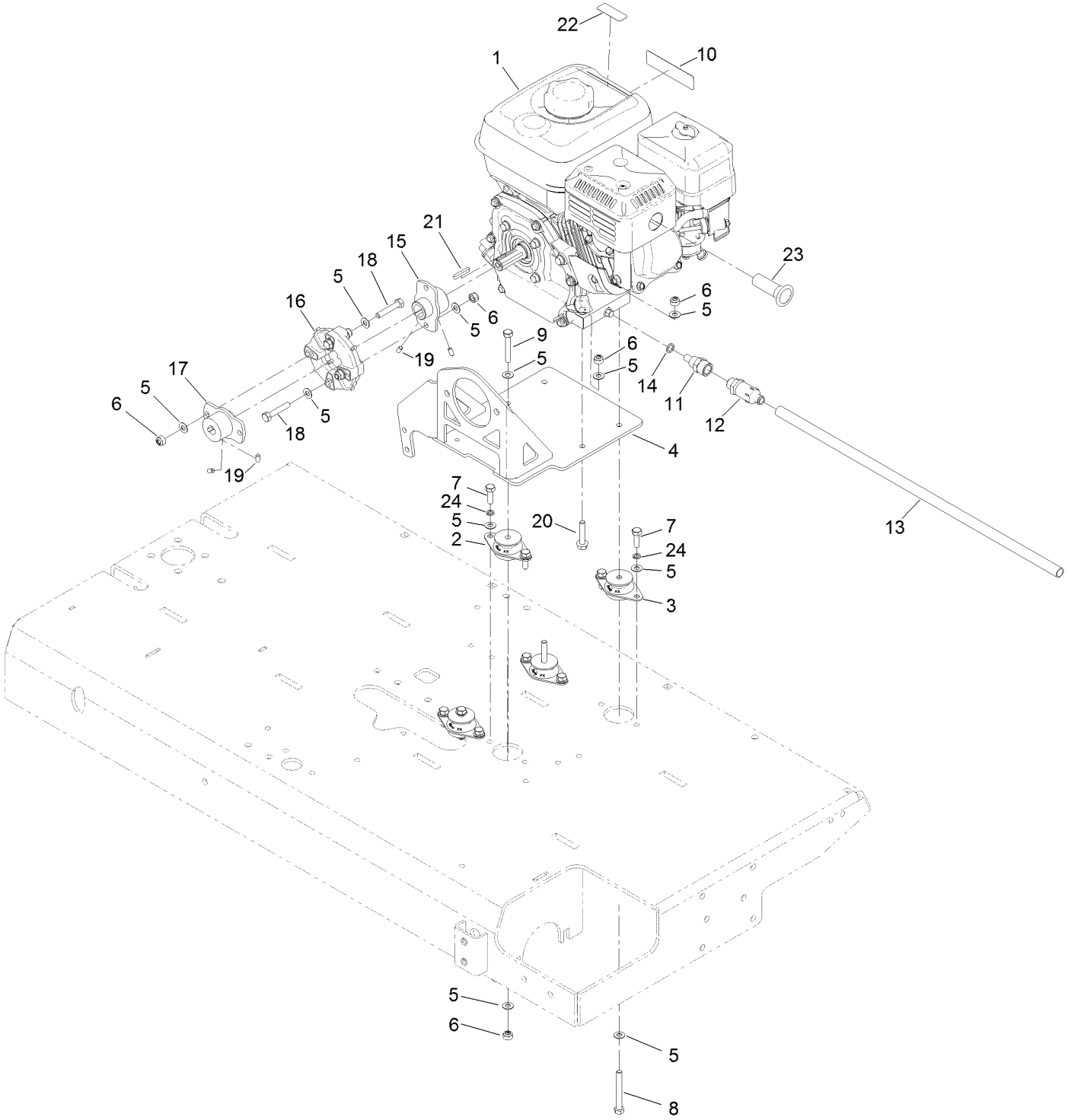

# Engine Assembly (continued)

| Ref. | Part Number | Qty. | Description |
|---|---|---|---|
| 1 | 111-7153 | 1 | Engine-Honda |
| 2 | 132-4799 | 2 | Mount-Engine |
| 3 | 132-4803 | 2 | Mount-Engine |
| 4 | 132-9217-01 | 1 | Engine Plate |
| 5 | 09475 | 26 | Washer |
| 6 | 09441 | 10 | Nut-Hex, NI |
| 7 | 03162 | 8 | Screw-HH |
| 8 | ZBH1H070U | 2 | Bolt |
| 9 | ZBH1H050U | 2 | Bolt |
| 10 | 133-8062 | 1 | Decal-Arrestor, Spark |
| 11 | 111-7088 | 1 | Adaptor-Drain, Oil |
| 12 | 92-6877 | 1 | Valve-Drain, Oil |
| 13 | 103-1964 | 1 | Hose-Drain, Oil |
| 14 | 111-7401 | 1 | Washer-Plug, Sump |
| 15 | 132-4812 | 1 | Engine Collar ASM |
| 16 | 119-0652 | 1 | Coupler-Rubber |
| 17 | 132-4814 | 1 | Pump Collar ASM |
| 18 | 09654 | 4 | Bolt |
| 19 | 133-1717 | 4 | Screw-Set |
| 20 | 33104-040 | 2 | Screw-HHF |
| 21 | 103-2739 | 1 | Key |
| 22 | 130-8322 | 1 | Decal-Warning, Ethanol |
| 23 | 111-6526 | 1 | Arrester-Spark |
| 24 | 03469 | 8 | Washer-Spring |

# Tire Assembly

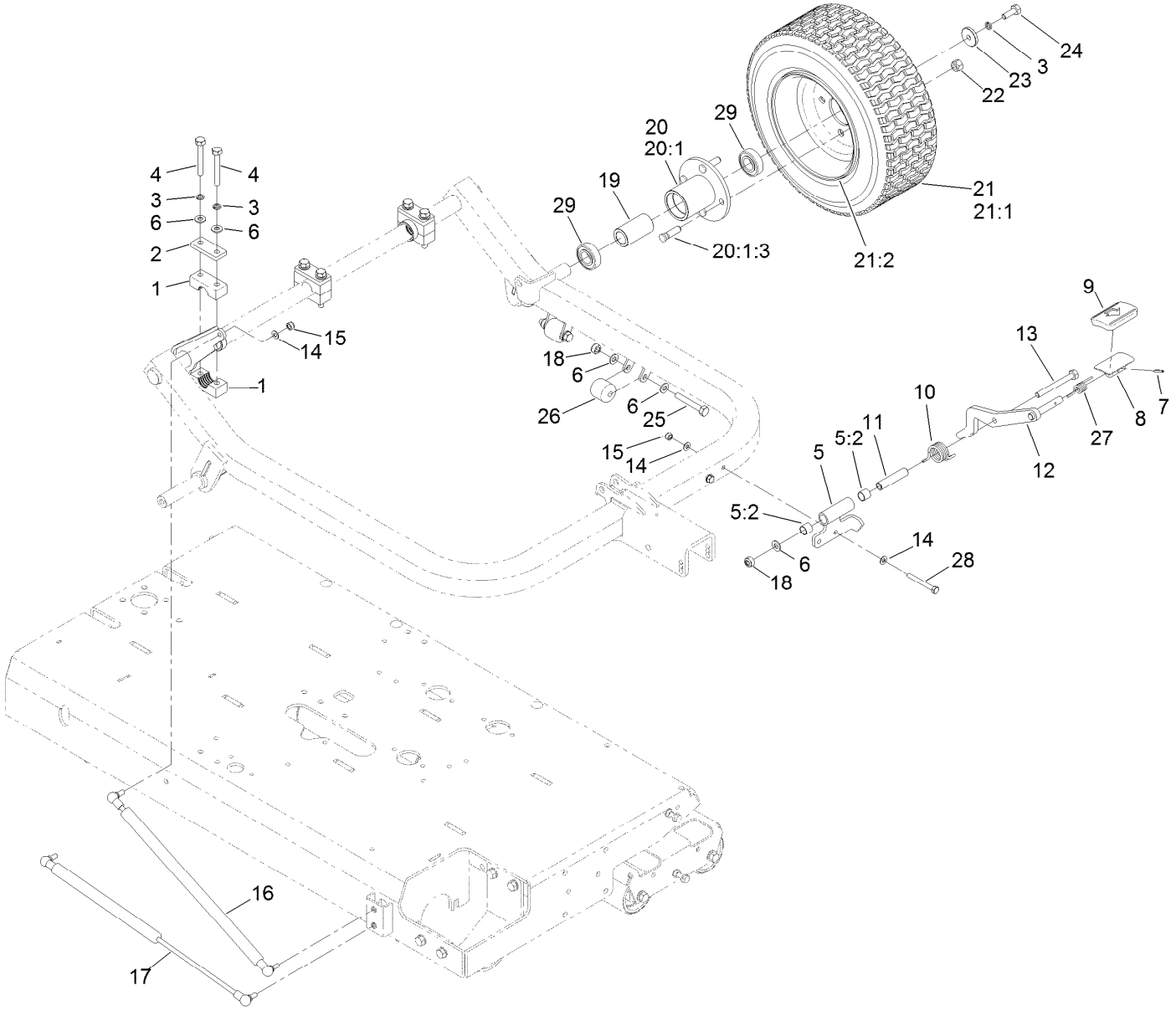

# Tire Assembly (continued)

| Ref. | Part Number | Qty. | Description |
|---|---|---|---|
| 1 | 127-8044 | 3 | Clamp-Drawbar |
| 2 | 111-5681 | 3 | Plate-Clamp, Axle |
| 3 | 09480 | 8 | Washer-Lock |
| 4 | ZBH1J075U | 6 | Bolt-HH |
| 5 | 127-1351 | 1 | Pedal Pivot ASM |
| 5:2 | 256-311 | 2 | Bushing-Split |
| 6 | ZWQ1J000U | 11 | Washer-Plain |
| 7 | 32121-45 | 1 | Pin-Spring |
| 8 | 117-9507 | 1 | Pedal-Accelerator |
| 9 | 74-9100 | 1 | Pad-Pedal, Forward |
| 10 | 127-1353 | 1 | Spring-Torsion |
| 11 | 127-1355 | 1 | Spacer |
| 12 | 132-4778-01 | 1 | Pedal Lever ASM |
| 13 | ZBH1J095U | 1 | Bolt-HH |
| 14 | 09475 | 6 | Washer |
| 15 | 09441 | 4 | Nut-Hex, NI |
| 16 | 127-1326 | 1 | Damper |

| Ref. | Part Number | Qty. | Description |
|---|---|---|---|
| 17 | 125-5696 | 1 | Spring-Gas |
| 18 | ZNN1J000U | 3 | Nut-Hex, NI |
| 19 | 111-5858 | 2 | Spacer-Bearing |
| 20 | 111-7103-03 | 2 | Wheel Hub ASM |
| 20:1 | | 1 | Wheel Hub ASM ●■ |
| 20:1:3 | 94-4143 | 4 | Stud-Wheel |
| 21 | 111-5678 | 2 | Wheel And Tire ASM |
| 21:1 | 111-5755 | 1 | Tire |
| 21:2 | 111-5756 | 1 | Rim-Wheel |
| 22 | 93-5268 | 8 | Nut-Lug |
| 23 | 111-5674 | 2 | Collar-Fixing |
| 24 | 09392 | 2 | Screw-HH |
| 25 | 09399 | 2 | Bolt |
| 26 | 127-1342 | 2 | Roller |
| 27 | 127-8034 | 1 | Spring-Torsion |
| 28 | ZBH1H070U | 2 | Bolt |
| 29 | 120-4621 | 4 | Bearing |

● Not illustrated

■ Not serviced separately

# Lifting Mechanism Assembly

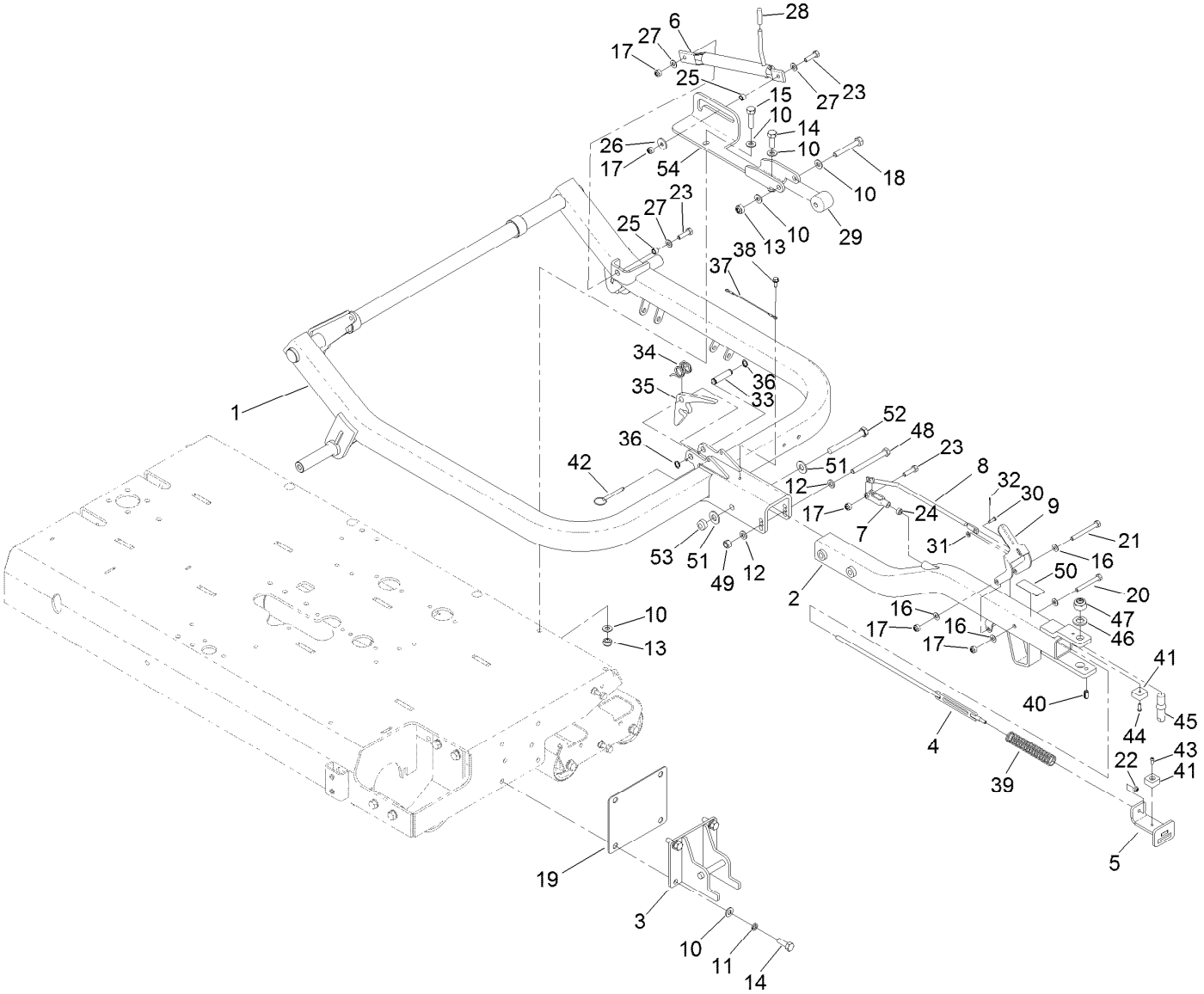

# Lifting Mechanism Assembly (continued)

| Ref. | Part Number | Qty. | Description |
|---|---|---|---|
| 1 | 131-6437-01 | 1 | Hitch Pivot ASM |
| 2 | 132-4770-01 | 1 | Hitch |
| 3 | 132-7075-01 | 1 | Bracket-Lock |
| 4 | 125-5743 | 1 | Lever-Slide |
| 5 | 132-4775-01 | 1 | Bracket-Slide |
| 6 | 132-4826-01 | 1 | Lever-Lock, Hitch |
| 7 | 1-303105 | 1 | Yoke-Adjustable |
| 8 | 127-1317 | 1 | Wire-Form |
| 9 | 132-9262 | 1 | Lever |
| 10 | ZWQ1J000U | 10 | Washer-Plain |
| 11 | 09480 | 4 | Washer-Lock |
| 12 | 107-1413 | 2 | Washer-Hardened |
| 13 | ZNN1J000U | 3 | Nut-Hex, NI |
| 14 | 09392 | 5 | Screw-HH |
| 15 | 09611 | 1 | Bolt-HH |
| 16 | 09475 | 4 | Washer |
| 17 | 09441 | 5 | Nut-Hex, NI |
| 18 | 09399 | 1 | Bolt |
| 19 | 138-9141-01 | 1 | Plate-Shim, Hitch |
| 20 | ZBH1H065U | 1 | Bolt |
| 21 | ZBH1H075U | 1 | Bolt |
| 22 | 09438 | 1 | Nut-Nyloc |
| 23 | 09369 | 3 | Screw-HH |
| 24 | 09207 | 1 | Nut |
| 25 | 120-9697 | 2 | Spacer |
| 26 | 1-603716 | 1 | Washer-Friction |
| 27 | 3256-23 | 3 | Washer-Plain |
| 28 | 125-5722 | 1 | Cap-Flex |
| 29 | 127-1342 | 1 | Roller |
| 30 | 283-29 | 1 | Pin-Clevis |
| 31 | 3256-51 | 1 | Washer-Flat |
| 32 | 3272-1 | 1 | Pin-Cotter |
| 33 | 125-5731 | 1 | Pin-Lock, Lever |
| 34 | 125-5723 | 1 | Spring-Torsion |
| 35 | 125-5711-01 | 1 | Latch-Hitch |
| 36 | 32151-61 | 2 | Ring-Retaining |
| 37 | 28-8070 | 1 | Lanyard |
| 38 | 32144-10 | 1 | Screw-HWH |
| 39 | 125-5737 | 1 | Spring-Compression |
| 40 | 32121-123 | 1 | Pin-Roll |
| 41 | 94-1392 | 2 | Pad-Rubber |
| 42 | 108-0094 | 1 | Pin-Cotterless |
| 43 | 127-5866 | 1 | Screw-HSBH |
| 44 | 119-7568 | 1 | Screw-HSBH |
| 45 | 127-5861 | 1 | Pin-Tow |
| 46 | 09491 | 1 | Washer-Plain |
| 47 | 09456 | 1 | Nut |
| 48 | 127-5864 | 1 | Screw-HH |
| 49 | 131-1558 | 1 | Nut-Lock |
| 50 | 127-5885 | 1 | Decal-Disconnect, Hitch |
| 51 | 87-7270 | 2 | Washer-Thrust |
| 52 | 131-1557 | 1 | Screw-HH |
| 53 | 94-4307 | 1 | Nut-Hex, Lock |
| 54 | 133-1756-01 | 1 | Bracket-Slide |

# Seat Assembly

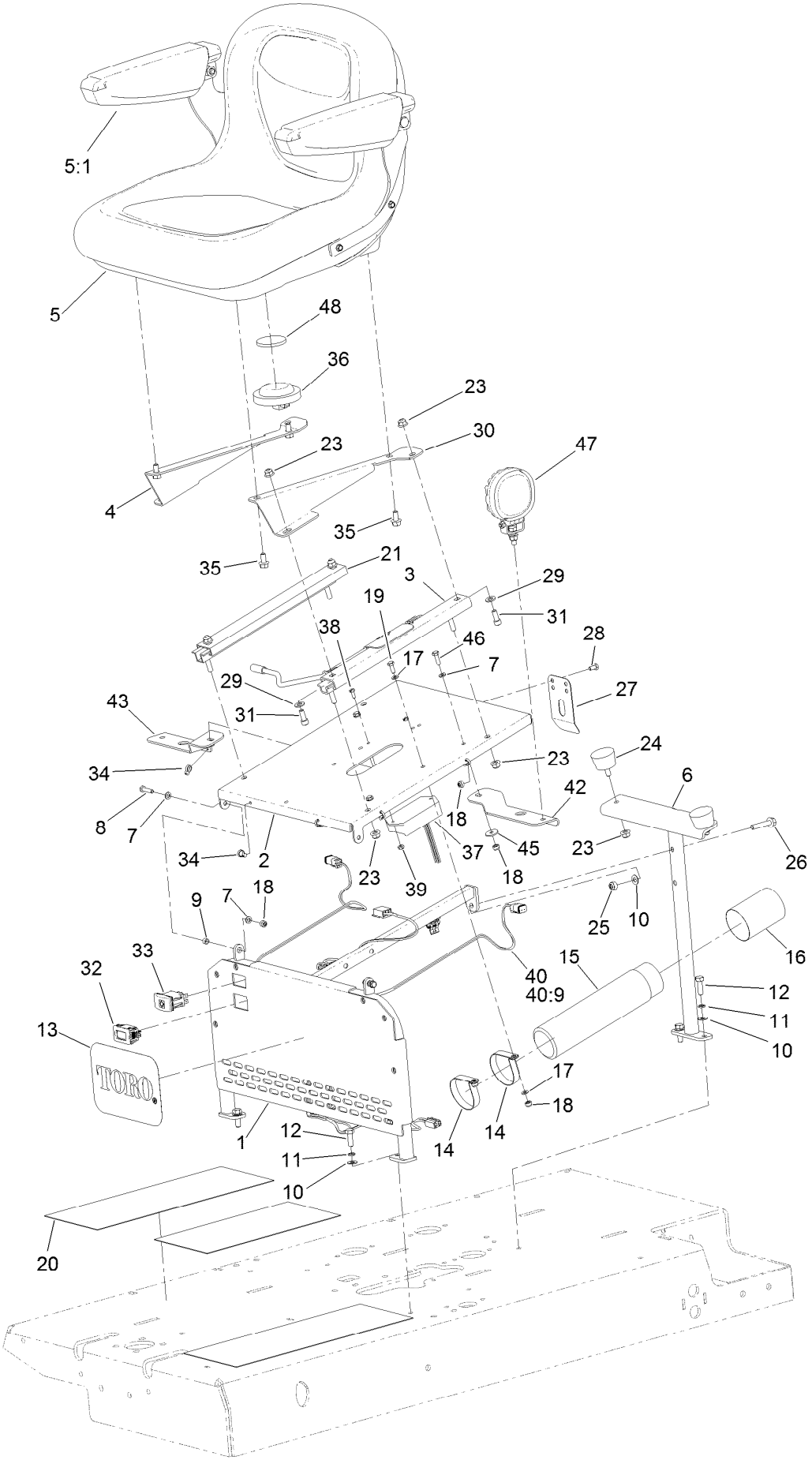

# Seat Assembly (continued)

| Ref. | Part Number | Qty. | Description |
|---|---|---|---|
| 1 | 131-6449-03 | 1 | Seat Support |
| 2 | 131-6447-03 | 1 | Seat Pan |
| 3 | 133-8896 | 1 | Seat Adjuster Lever ASM |
| 4 | 131-6448-03 | 1 | Bracket-Seat, RH |
| 5 | 133-1729 | 1 | Seat Assembly |
| 5:1 | 111-6564 | 1 | Arm Rest Kit |
| 6 | 132-4751-01 | 1 | Support-Frame, Rear |
| 7 | 09472 | 6 | Washer-Plain |
| 8 | ZBH1F025U | 2 | Bolt-HH |
| 9 | 88-7860 | 2 | Spacer |
| 10 | 09475 | 5 | Washer |
| 11 | 03469 | 4 | Washer-Spring |
| 12 | 03162 | 4 | Screw-HH |
| 13 | 67-7320 | 1 | Decal |
| 14 | 107-1865 | 2 | R-Clamp |
| 15 | 104-7050 | 1 | Tube-Manual |
| 16 | 104-7048 | 1 | Cap-Housing |
| 17 | ZWP1F000U | 4 | Washer-Plain |
| 18 | 09438 | 8 | Nut-Nyloc |
| 19 | 09362 | 2 | Screw-HH |
| 20 | 70-07-067 | 4 | Tape-Slip, Anti |
| 21 | 92-8990 | 1 | Adjuster-Slave |
| 23 | 104-8300 | 10 | Nut-HF, NI |
| 24 | 68-3270 | 2 | Bumper-Rubber |
| 25 | 09441 | 1 | Nut-Hex, NI |
| 26 | 33104-040 | 1 | Screw-HHF |
| 27 | 66-2630 | 1 | Latch-Seat |
| 28 | 09361 | 2 | Screw-HH |
| 29 | 3256-23 | 4 | Washer-Plain |
| 30 | 132-4750-03 | 1 | Bracket-Seat, LH |
| 31 | 3274-10 | 4 | Screw-HSH |
| 32 | 120-2244 | 1 | Hourmeter |
| 33 | 111-6576 | 1 | Switch |
| 34 | HY3966 | 8 | Tie-Cable |
| 35 | 33104-016 | 4 | Screw-HHF |
| 36 | 100-3524 | 1 | Switch-Seat |
| 37 | 122-0423 | 1 | Module-Ground, Magneto |
| 38 | 32105-8 | 2 | Screw-SHH |
| 39 | 110-3145 | 2 | Nut-Lock |
| 40 | 122-0832 | 1 | Harness-Wire |
| 40:9 | 122-1006 | 1 | Harness-Wire, Jumper |
| 42 | 132-4806-03 | 1 | Light Mount |
| 43 | 132-4805-03 | 1 | Light Mount |
| 45 | 09263 | 2 | Washer |
| 46 | 09363 | 2 | Screw-HH |
| 47 | 133-8793 | 2 | Light-LED |
| 48 | 133-2797 | 1 | Disc-Plunger |
| 99 | 107-0342 | 1 | Sealant-Electrical ● |

● Not illustrated

# Steering Wheel Assembly

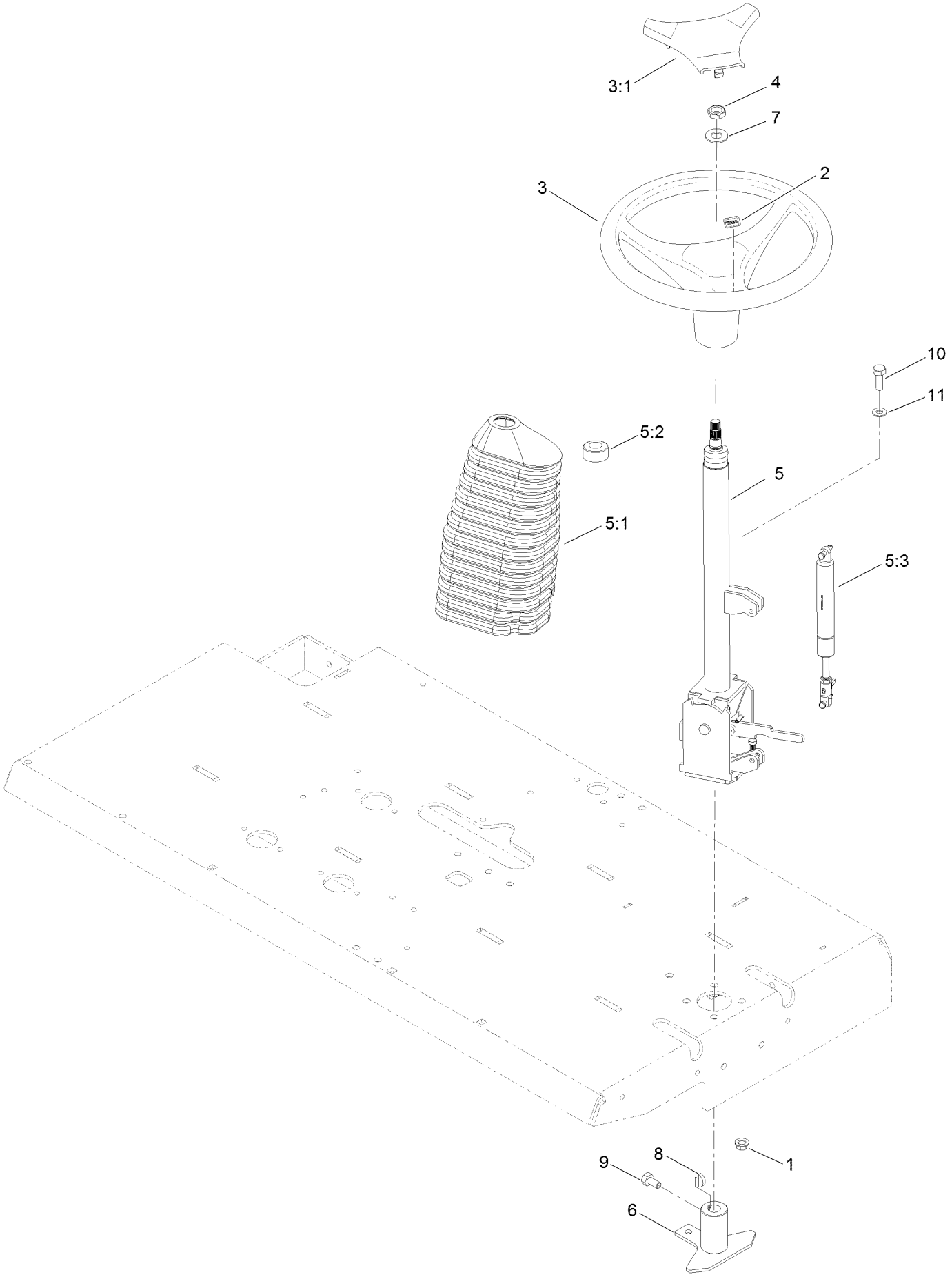

# Steering Wheel Assembly (continued)

| Ref. | Part Number | Qty. | Description |
|---|---|---|---|
| 1 | 63-11-015 | 4 | Nut-Hex |
| 2 | 98-1459 | 1 | Decal |
| 3 | 98-1471 | 1 | Wheel-Steering |
| 3:1 | 98-1468 | 1 | Cover-Wheel, Steering |
| 4 | 110-8816 | 1 | Nut-Hex |
| 5 | 127-8041 | 1 | Column-Steering |
| 5:1 | 120-2592 | 1 | Boot-Rubber, Column |
| 5:2 | 120-2593 | 1 | Boot-Rubber, Bearing |
| 5:3 | 120-2594 | 1 | Gas Spring ASM |
| 6 | 132-7084-01 | 1 | Steering Pivot |
| 7 | 3256-27 | 1 | Washer-Flat |
| 8 | 3257-7 | 1 | Key-Woodruff |
| 9 | 09391 | 1 | Screw-HH |
| 10 | 09392 | 4 | Screw-HH |
| 11 | ZWQ1J000U | 4 | Washer-Plain |

# Parking Brake Assembly

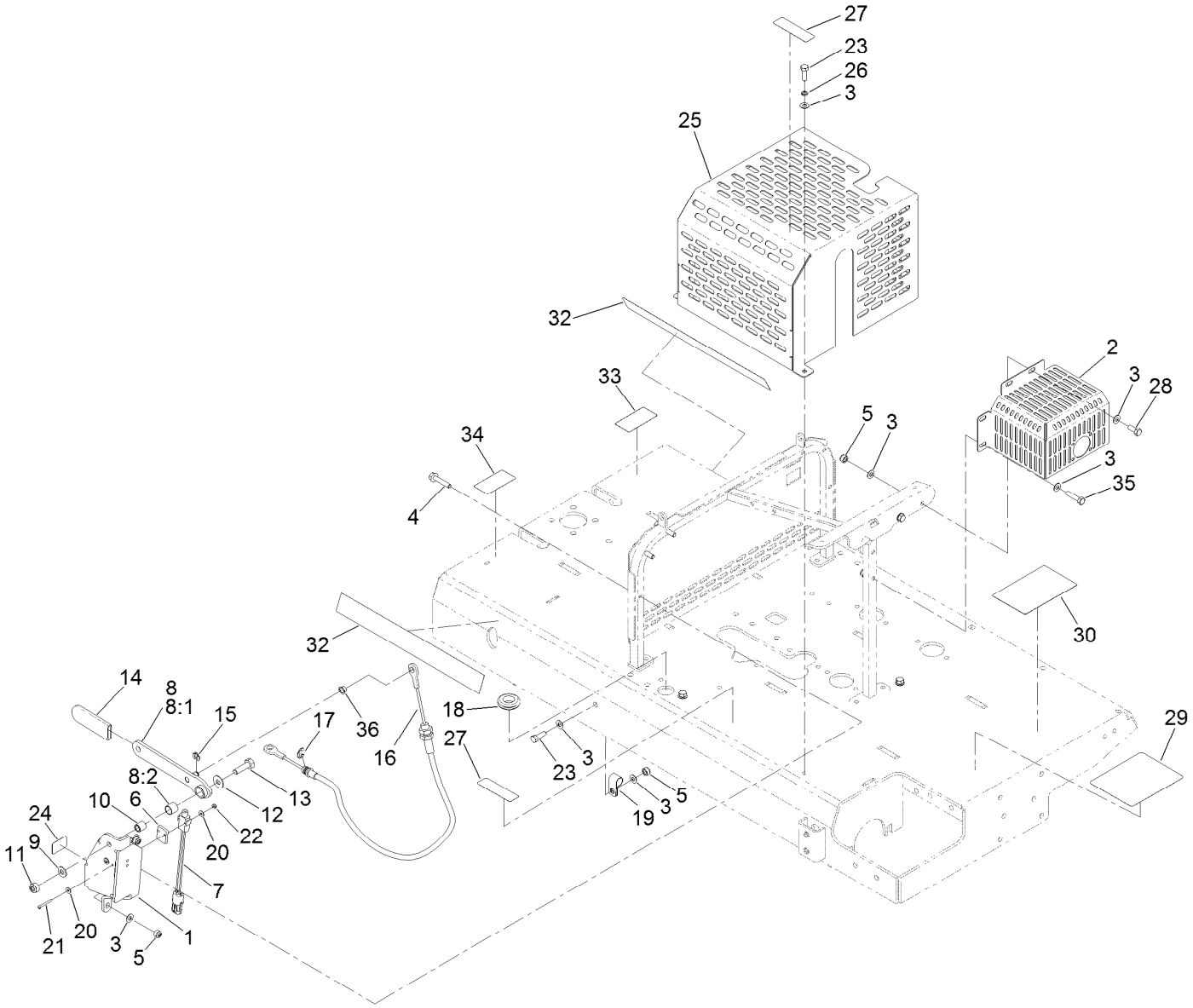

# Parking Brake Assembly (continued)

| Ref. | Part Number | Qty. | Description |
|---|---|---|---|
| 1 | 132-4837-03 | 1 | Support-Lever, Brake |
| 2 | 132-4801-03 | 1 | Guard-Exhaust |
| 3 | 09475 | 14 | Washer |
| 4 | 33104-040 | 3 | Screw-HHF |
| 5 | 09441 | 7 | Nut-Hex, NI |
| 6 | 131-6383 | 1 | Spacer |
| 7 | 99-3410 | 1 | Switch |
| 8 | 132-4839 | 1 | Brake Handle ASM |
| 8:1 | 132-4838 | 1 | Lever-Brake |
| 8:2 | 256-311 | 1 | Bushing-Split |
| 9 | ZWQ1J000U | 1 | Washer-Plain |
| 10 | 131-6386 | 1 | Bushing-Pivot |
| 11 | ZNN1J000U | 1 | Nut-Hex, NI |
| 12 | HY03355 | 1 | Washer-Plated |
| 13 | 09394 | 1 | Bolt |
| 14 | 21-1880 | 1 | Grip-Handle |
| 15 | 32151-47 | 1 | Ring-Retaining |
| 16 | 136-6225 | 1 | Cable-Brake, Park |
| 17 | 32120-47 | 1 | Ring-Retaining, External |
| 18 | 1-543286 | 1 | Grommet |
| 19 | 2412-41 | 1 | Clamp-R |
| 20 | 3269-6 | 4 | Washer-Flat |
| 21 | 3249-11 | 2 | Screw-Machine |
| 22 | 3296-9 | 2 | Nut-Hex |
| 23 | 03162 | 4 | Screw-HH |

| Ref. | Part Number | Qty. | Description |
|---|---|---|---|
| 24 | 131-0440 | 1 | Decal-Brake, Parking |
| 25 | 133-1719 | 1 | Cover-Transmission |
| 26 | 03469 | 3 | Washer-Spring |
| 27 | 120-0627 | 2 | Decal-Warning |
| 28 | 09368 | 2 | Screw-HH |
| 29 | 132-9299 | 1 | Decal-Service |
| 29 | 133-1703 | 1 | Decal-Service, Czech |
| 29 | 133-1704 | 1 | Decal-Service, Danish |
| 29 | 133-1705 | 1 | Decal-Service, German |
| 29 | 133-1706 | 1 | Decal-Service, Spanish |
| 29 | 133-1707 | 1 | Decal-Service, Finnish |
| 29 | 133-1708 | 1 | Decal-Service, French |
| 29 | 133-1709 | 1 | Decal-Service, Italian |
| 29 | 133-1710 | 1 | Decal-Service, Japanese |
| 29 | 133-1711 | 1 | Decal-Service, Dutch |
| 29 | 133-1712 | 1 | Decal-Service, Norwegian |
| 29 | 133-1713 | 1 | Decal-Service, Polish |
| 29 | 133-1714 | 1 | Decal-Service, Portuguese |
| 29 | 133-1715 | 1 | Decal-Service, Swedish |
| 30 | 127-5884 | 1 | Decal-Operation |
| 32 | 132-9298 | 2 | Decal |
| 33 | 111-5650 | 1 | Decal-Control, Pedal (RH) |
| 34 | 111-5649 | 1 | Decal-Control, Pedal (LH) |
| 35 | ZDH1H035U | 1 | Screw-HH |
| 36 | 132-9291 | 1 | Bushing-Cable |

# Control Assembly

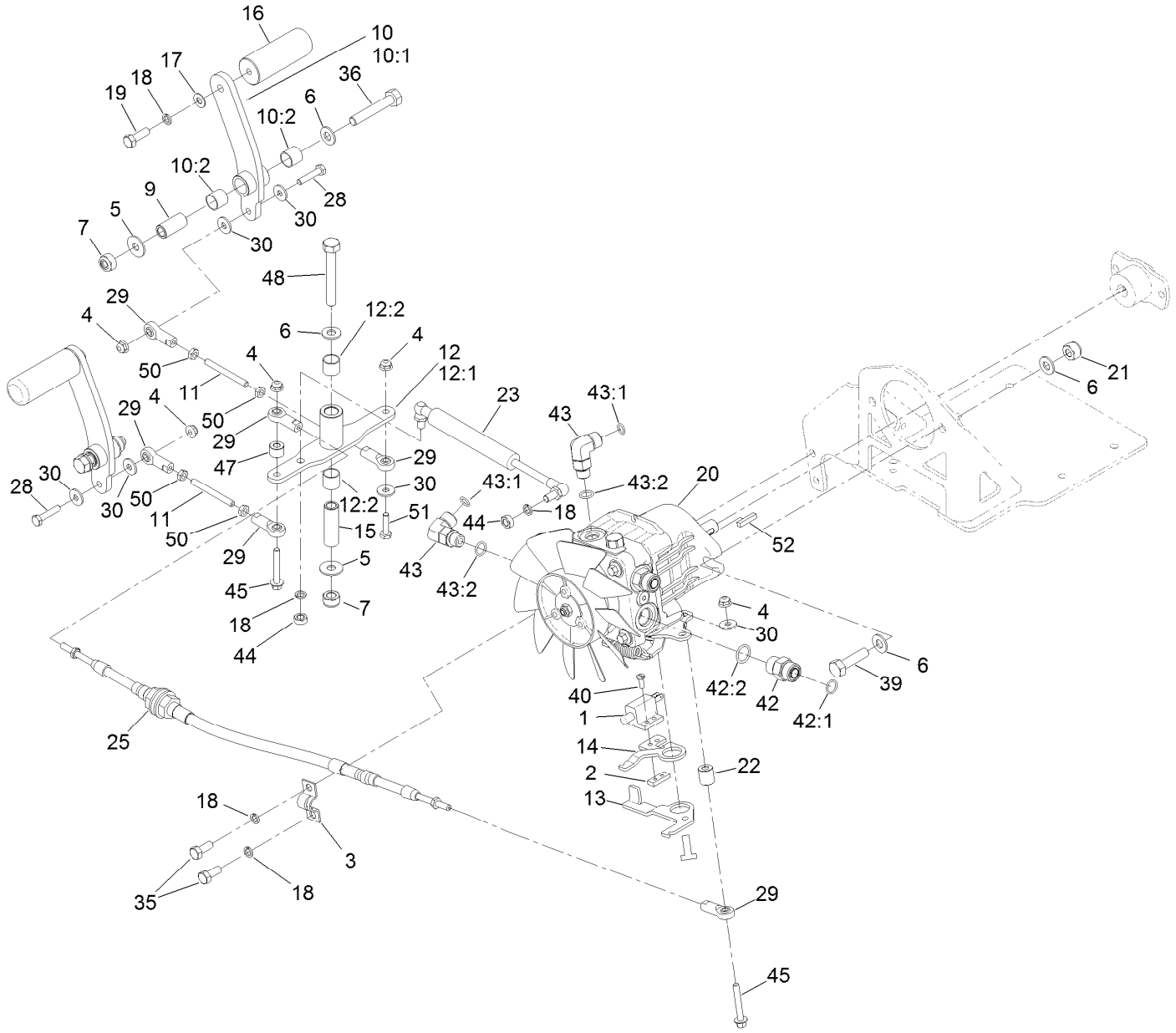

# Control Assembly (continued)

| Ref. | Part Number | Qty. | Description |
|---|---|---|---|
| 1 | 1-513051 | 1 | Switch-Open, Normally |
| 2 | 1-633181 | 1 | Plate-Tapped |
| 3 | 93-2092 | 1 | Clamp-Cable |
| 4 | 104-7201 | 5 | Nut-HF |
| 5 | HY03355 | 3 | Washer-Plated |
| 6 | ZWQ1J000U | 7 | Washer-Plain |
| 7 | ZNN1J000U | 3 | Nut-Hex, NI |
| 9 | 131-6350 | 2 | Bushing-Pivot |
| 10 | 132-4844 | 2 | Motion Pedal ASM |
| 10:1 | 132-9229 | 1 | Pedal-Motion |
| 10:2 | 256-311 | 2 | Bushing-Split |
| 11 | 132-9224 | 2 | Rod-Pedal |
| 12 | 132-9236 | 1 | Pedal Rod Pivot ASM |
| 12:1 | 132-9220 | 1 | Pivot-Rod, Pedal |
| 12:2 | 256-311 | 2 | Bushing-Split |
| 13 | 132-4795 | 1 | Arm |
| 14 | 132-4796 | 1 | Arm |
| 15 | 132-9226 | 1 | Bushing-Pivot |
| 16 | 111-5727 | 2 | Pedal |
| 17 | 09475 | 2 | Washer |
| 18 | 03469 | 6 | Washer-Spring |
| 19 | 03162 | 2 | Screw-HH |
| 20 | 132-4797 | 1 | Pump-Hydraulic |
| 21 | 09447 | 2 | Nut |

| Ref. | Part Number | Qty. | Description |
|---|---|---|---|
| 22 | 132-4798 | 1 | Bushing |
| 23 | 132-4807 | 1 | Damper |
| 25 | 132-7098 | 1 | Cable-Traction |
| 28 | 321-8 | 2 | Screw-HH |
| 29 | 2411-41 | 6 | Rod End-Ball Joint |
| 30 | 3256-78 | 6 | Washer-Flat |
| 35 | 09368 | 2 | Screw-HH |
| 36 | 09397 | 2 | Bolt |
| 39 | 09611 | 2 | Bolt-HH |
| 40 | 32105-8 | 2 | Screw-SHH |
| 42 | 340-4 | 2 | Fitting-Straight |
| 42:1 | 237-30 | 1 | O-Ring |
| 42:2 | 237-79 | 1 | O-Ring |
| 43 | 340-77 | 2 | Fitting-Elbow, 90 DEG |
| 43:1 | 237-22 | 1 | O-Ring |
| 43:2 | 237-42 | 1 | O-Ring |
| 44 | ZNH1H000U | 2 | Nut-Hex |
| 45 | 32105-18 | 2 | Screw-HHF |
| 47 | 132-9237 | 1 | Bushing |
| 48 | ZBH1J075U | 1 | Bolt-HH |
| 50 | 3220-1 | 4 | Nut-Jam |
| 51 | 321-6 | 1 | Screw-HH |
| 52 | 111-5724 | 1 | Key-Square |

# Hydraulic Pump Assembly No. 132-4797

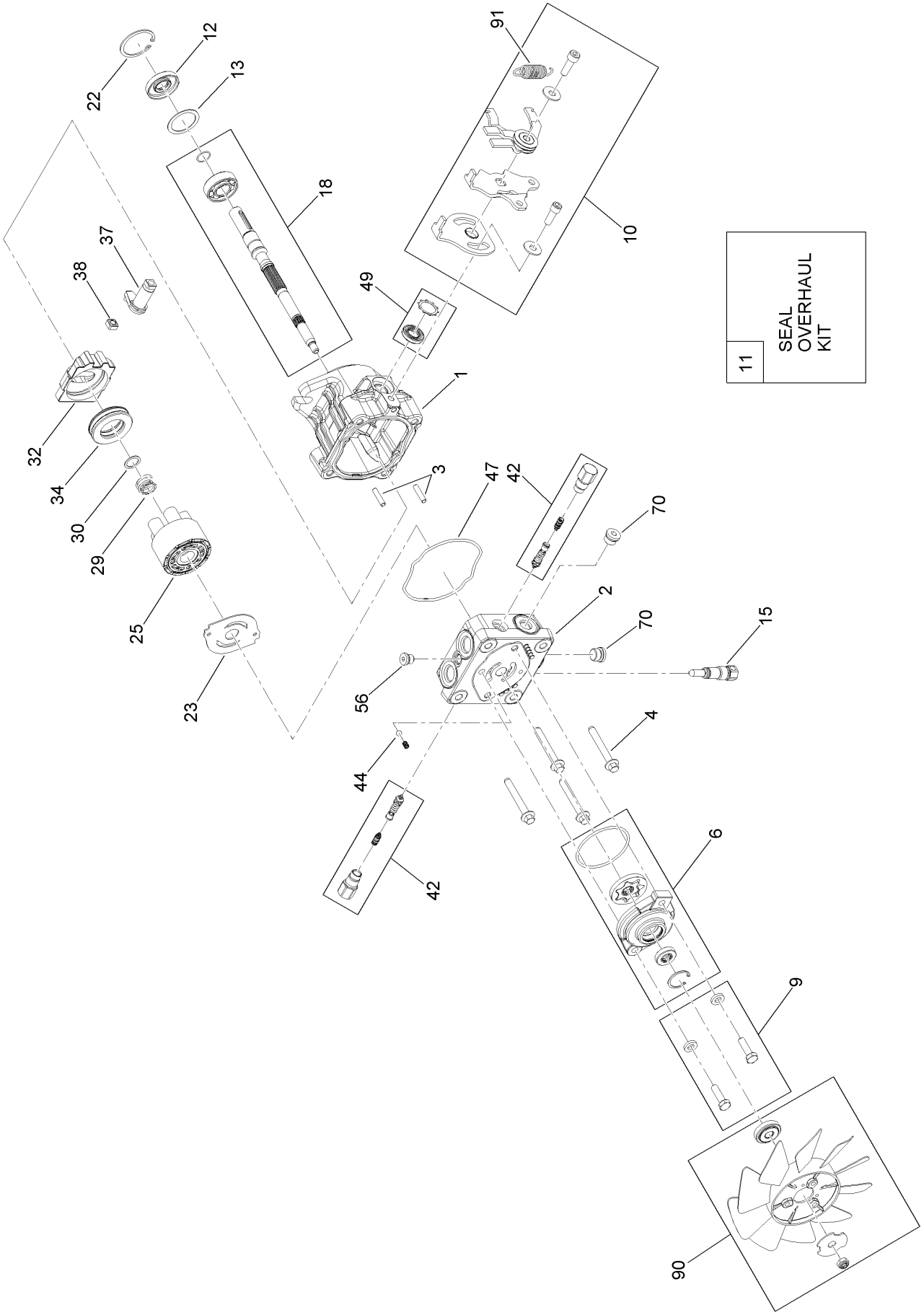

# Hydraulic Pump Assembly No. 132-4797 (continued)

| Ref. | Part Number | Qty. | Description |
|---|---|---|---|
| 1 | 133-1780 | 1 | Housing Kit |
| 2 | 133-1781 | 1 | Endcap Kit |
| 3 | 106-8753 | 2 | Pin-Headless, Straight |
| 4 | 133-1783 | 4 | Hex Flange Bolt |
| 6 | 133-1784 | 1 | STD Charge Pump Kit |
| 9 | 133-1785 | 1 | Charge Pump Bolt Kit |
| 10 | 115-4459 | 1 | Return Kit |
| 11 | 105-6184 | 1 | Seal Overhaul Kit |
| 12 | 104-5310 | 1 | Seal-Lip |
| 13 | 133-1787 | 1 | Washer-Flat |
| 15 | 106-8759 | 1 | Bypass Valve Kit |
| 18 | 133-1789 | 1 | Shaft Kit |
| 22 | 104-5309 | 1 | Ring-Retaining |
| 23 | 105-6185 | 1 | Plate-Valve |
| 25 | 103-2666 | 1 | Cylinder Block Kit |
| 29 | 133-1793 | 1 | Spring-Block |
| 30 | 133-1794 | 1 | Washer-Flat |
| 32 | 133-1795 | 1 | Swashplate-Coated, 10Cc |
| 34 | 121-3235 | 1 | Bearing-Thrust, Plastic Cage |
| 37 | 133-1797 | 1 | Arm-Trunnion, Square (Taper) |
| 38 | 133-1798 | 1 | Slot-Guide |
| 42 | 133-1799 | 2 | Shock Valve 160 Bar Kit |
| 44 | 136-6150 | 1 | Charge Relief Kit |
| 47 | 125-4682 | 1 | O-Ring |
| 49 | 106-8761 | 1 | Trunnion Seal / Retainer Kit |
| 56 | 106-8762 | 1 | Plug-HSH |
| 70 | 104-2189 | 2 | Plug-Thread, Straight |
| 90 | 136-6154 | 1 | Fan/Hub Kit |
| 91 | 115-8307 | 1 | Spring-Extension |

# Cylinder Head Assembly

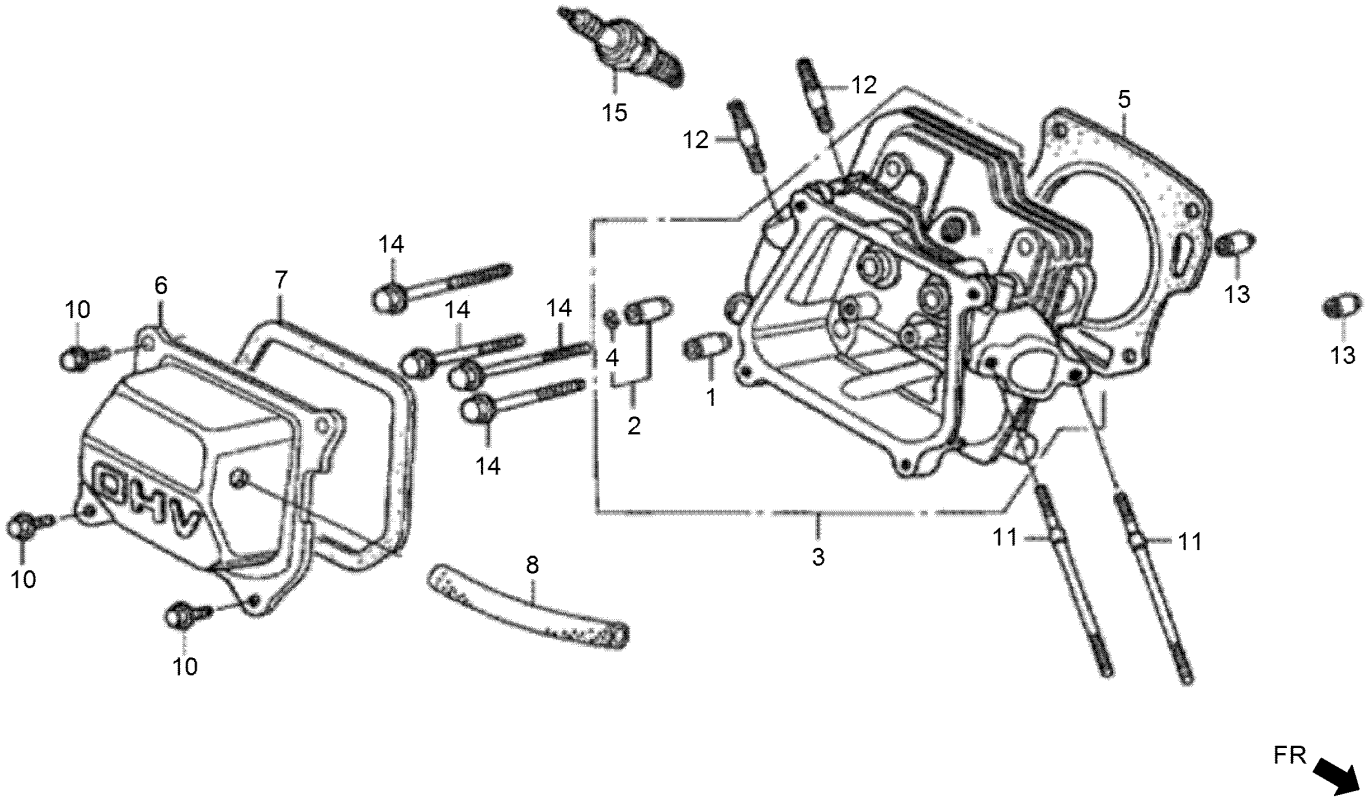

# Cylinder Head Assembly (continued)

| Ref. | Part Number | Qty. | Description |
|---|---|---|---|
| 1 | 132-0118 | 1 | Guide-Intake Valve |
| 2 | 132-0119 | 1 | Guide-Exhaust Valve |
| 3 | 132-0124 | 1 | Cylinder Head ASM |
| 4 | 132-0125 | 1 | Clip-Valve Guide |
| 5 | 132-0126 | 1 | Gasket-Cylinder Head |
| 6 | 132-0127 | 1 | Head Cover ASM |
| 7 | 132-0133 | 1 | Packing-Head Cover |
| 8 | 132-0234 | 1 | Tube-Breather |
| 10 | 132-4880 | 4 | Bolt-Flange-6X12 |
| 11 | 132-0612 | 2 | Bolt-Stud-6X112 |
| 12 | 132-0615 | 2 | Bolt-Stud-8X32 |
| 13 | 132-0697 | 2 | Dowel Pin-10X16 |
| 14 | 131-8226 | 4 | Bolt-Flange-8X60 |
| 15 | 131-8233 | 1 | Sparkplug |

# Cylinder Barrel Assembly

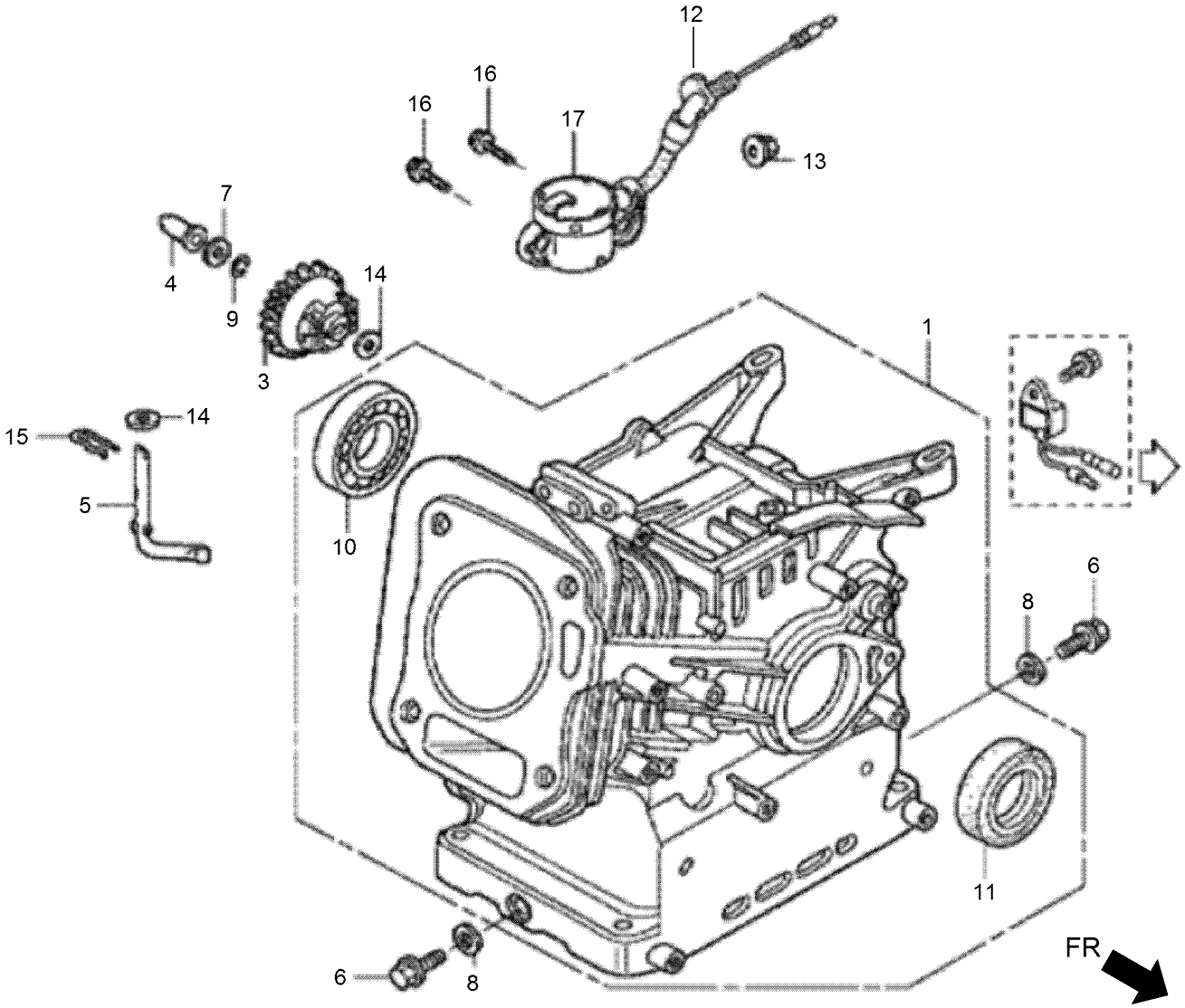

# Cylinder Barrel Assembly (continued)

| Ref. | Part Number | Qty. | Description |
|---|---|---|---|
| 1 | 132-0114 | 1 | Barrel ASM-Cylinder |
| 3 | 132-0294 | 1 | Governor ASM |
| 4 | 132-0304 | 1 | Slider-Governor |
| 5 | 132-0307 | 1 | Shaft-Governor Arm |
| 6 | 132-0622 | 2 | Bolt-Drain Plug |
| 7 | 132-0635 | 1 | Washer-Thrust-6Mm |
| 8 | 132-0640 | 2 | Washer-Drain Plug-10.2Mm |
| 9 | 132-0642 | 1 | Clip-Governor Holder |
| 10 | 132-0651 | 1 | Bearing-Radial Ball |
| 10 | 132-0650 | 1 | Bearing-Radial Ball |
| 10 | 132-0649 | 1 | Bearing-Radial Ball |
| 11 | 132-0654 | 1 | Oil Seal-25X41X6 |
| 11 | 132-0658 | 1 | Oil Seal-25X41.25X6 |
| 12 | 132-0668 | 1 | O-Ring-14Mm |
| 13 | 132-0686 | 1 | Nut-Flange-10Mm |
| 14 | 132-0688 | 2 | Washer-Plain-6Mm |
| 15 | 132-0693 | 1 | Pin-Lock-8Mm |
| 16 | 131-8221 | 2 | Bolt-Flange-6X12 |
| 17 | 132-0532 | 1 | Switch ASM-Oil Level |

# Crankcase Cover Assembly

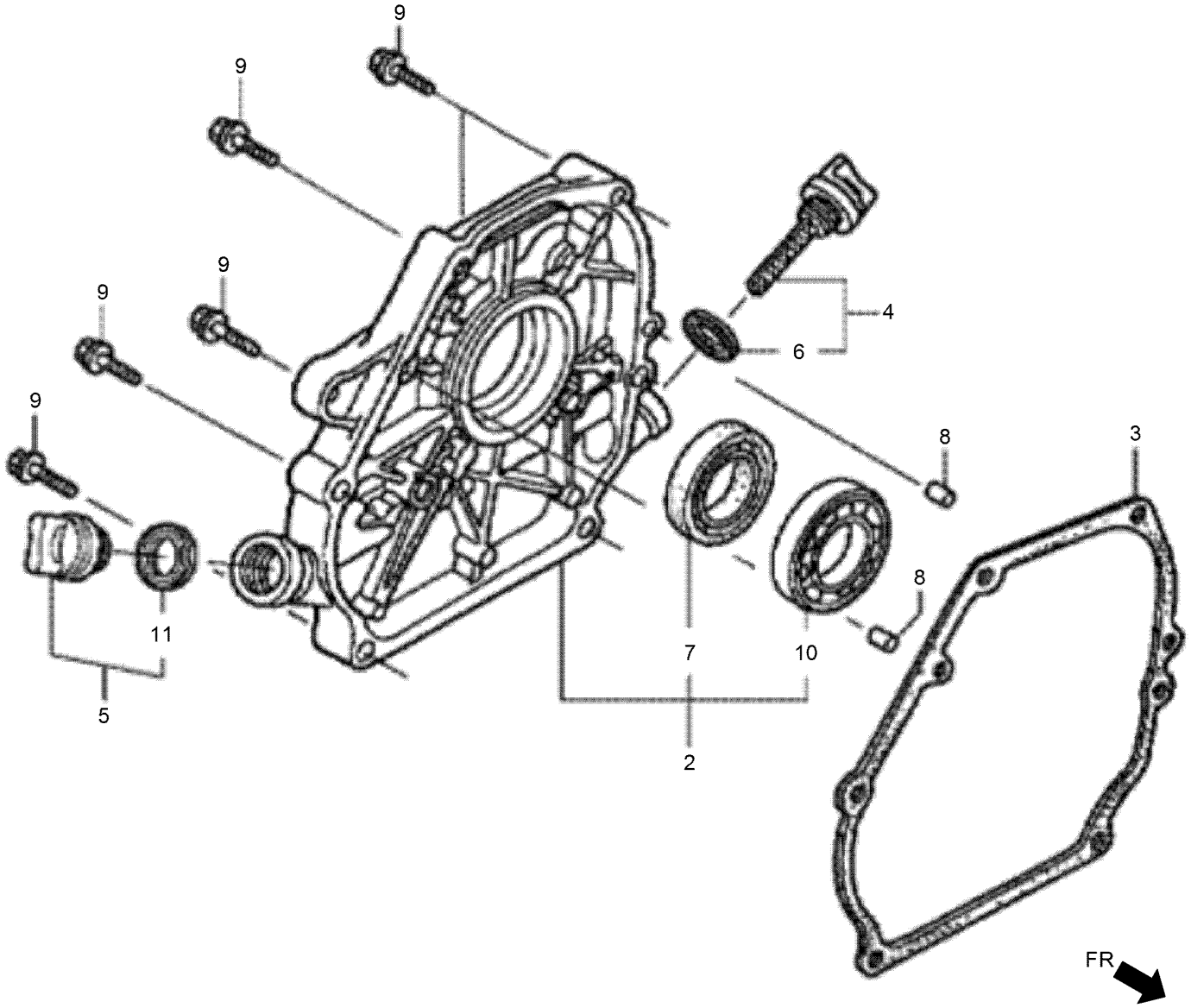

# Crankcase Cover Assembly (continued)

| Ref. | Part Number | Qty. | Description |
|---|---|---|---|
| 2 | 132-0103 | 1 | Cover ASM-Crankcase |
| 3 | 132-0108 | 1 | Packing-Case Cover |
| 4 | 132-0220 | 1 | Cap ASM-Oil Filler |
| 5 | 132-0221 | 1 | Cap ASM-Oil Filler |
| 6 | 132-0224 | 1 | Packing-Oil Filler Cap |
| 7 | 132-0654 | 1 | Oil Seal-25X41X6 |

| Ref. | Part Number | Qty. | Description |
|---|---|---|---|
| 7 | 132-0658 | 1 | Oil Seal-25X41.25X6 |
| 8 | 132-0695 | 2 | Dowel Pin-8X14 |
| 9 | 131-8225 | 6 | Bolt-Flange-8X32 |
| 10 | 131-8227 | 1 | Bearing-Radial Ball-6205 |
| 11 | 132-0224 | 1 | Packing-Oil Filler Cap |

# Crankshaft Assembly

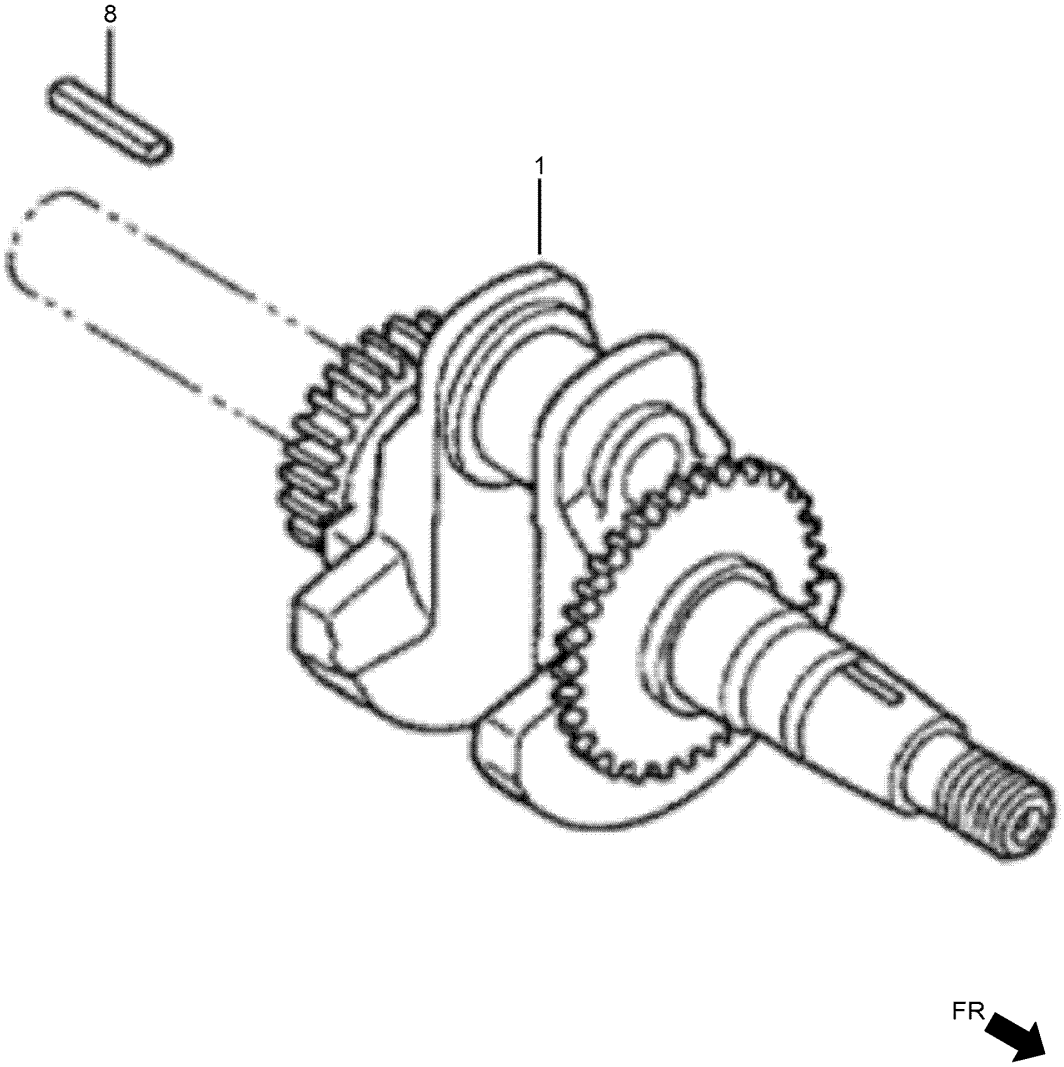

# Crankshaft Assembly (continued)

| Ref. | Part Number | Qty. | Description |
|---|---|---|---|
| 1 | 132-0164 | 1 | Crankshaft ASM |
| 8 | 132-0647 | 1 | Key-5X5X33 |

# Piston and Connecting Rod Assembly

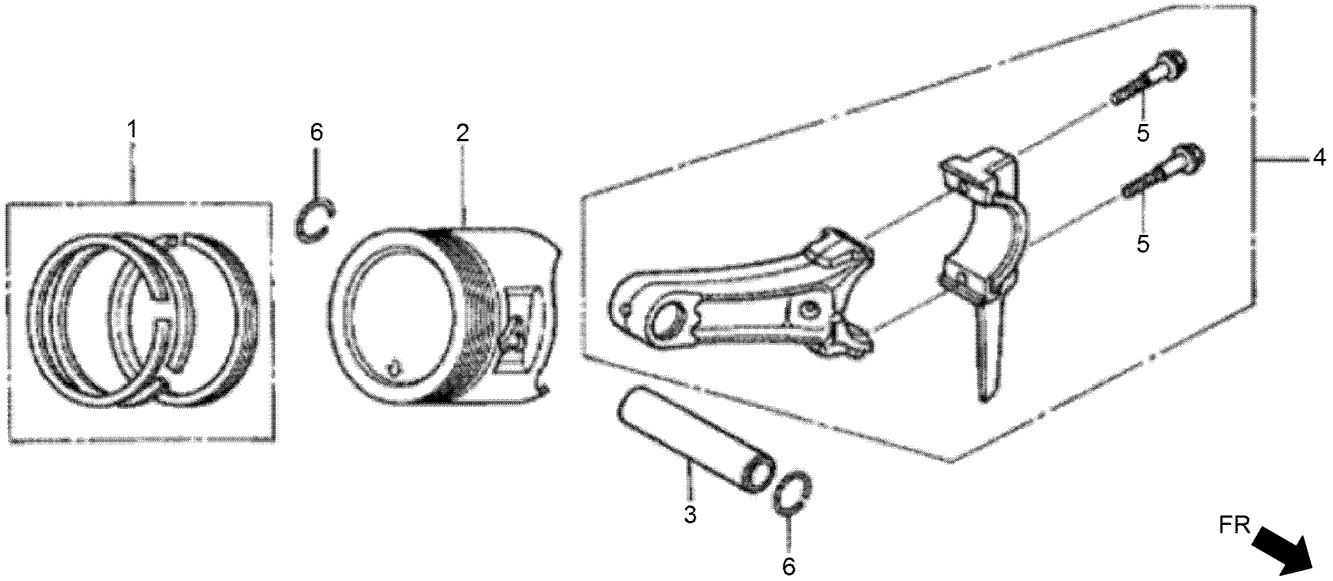

# Piston and Connecting Rod Assembly (continued)

| Ref. | Part Number | Qty. | Description |
|---|---|---|---|
| 1 | 132-0137 | 1 | Ring Set-Piston (STD) |
| 1 | 132-0138 | 1 | Ring Set-Piston (STD) |
| 2 | 132-0144 | 1 | Piston |
| 3 | 132-0150 | 1 | Pin-Piston |
| 4 | 132-0155 | 1 | Rod ASM-Connecting |
| 5 | 132-0573 | 2 | Bolt-Connecting Rod |
| 6 | 132-0637 | 2 | Clip-Piston Pin-18Mm |

# Camshaft Assembly

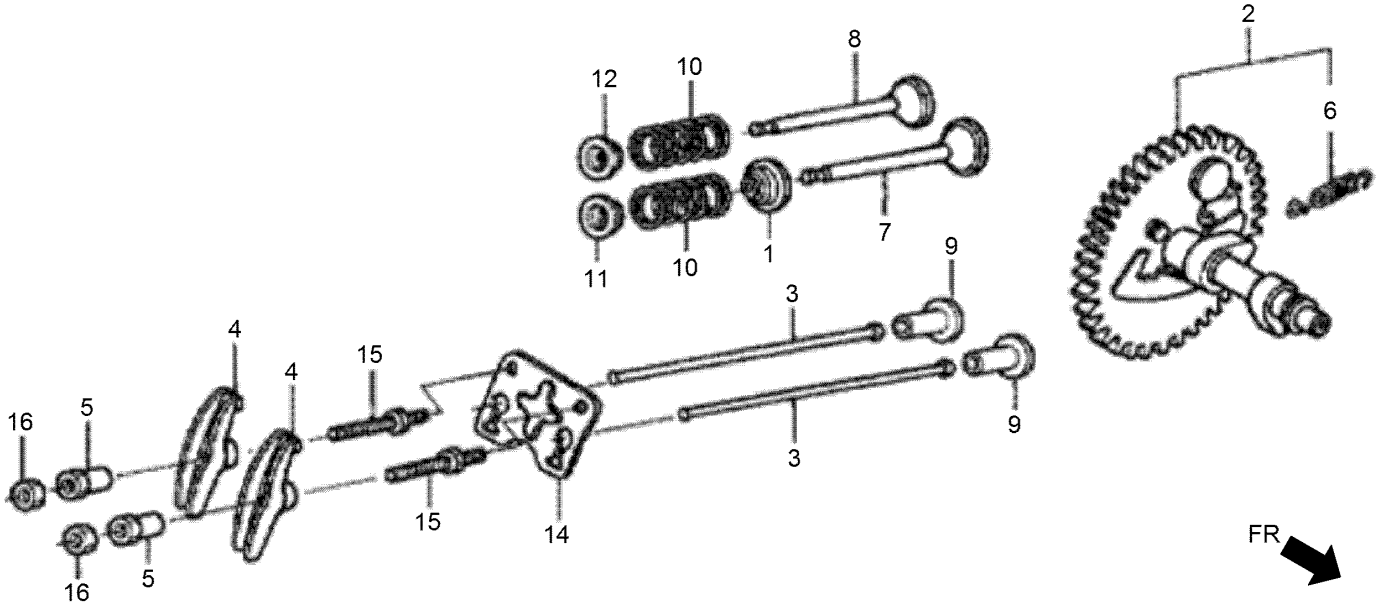

# Camshaft Assembly (continued)

| Ref. | Part Number | Qty. | Description |
|---|---|---|---|
| 1 | 132-0120 | 1 | Seal-Valve Stem |
| 2 | 132-0172 | 1 | Camshaft ASM |
| 3 | 132-0181 | 2 | Rod-Push |
| 4 | 132-0184 | 2 | Arm-Valve Rocker |
| 5 | 132-0188 | 2 | Pivot-Rocker Arm |
| 6 | 132-0191 | 1 | Spring-Weight Return |
| 7 | 132-0194 | 1 | Valve-Intake |
| 8 | 132-0198 | 1 | Valve-Exhaust |
| 9 | 132-0203 | 2 | Lifter-Valve |
| 10 | 132-0206 | 2 | Spring-Valve |
| 11 | 132-0211 | 1 | Retainer-Intake Valve Spring |
| 12 | 132-0211 | 1 | Retainer-Intake Valve Spring |
| 14 | 132-0215 | 1 | Plate-Push Rod Guide |
| 15 | 132-0592 | 2 | Bolt-Pivot-8Mm |
| 16 | 132-0629 | 2 | Nut-Pivot Adjusting |

# Recoil Starter Assembly

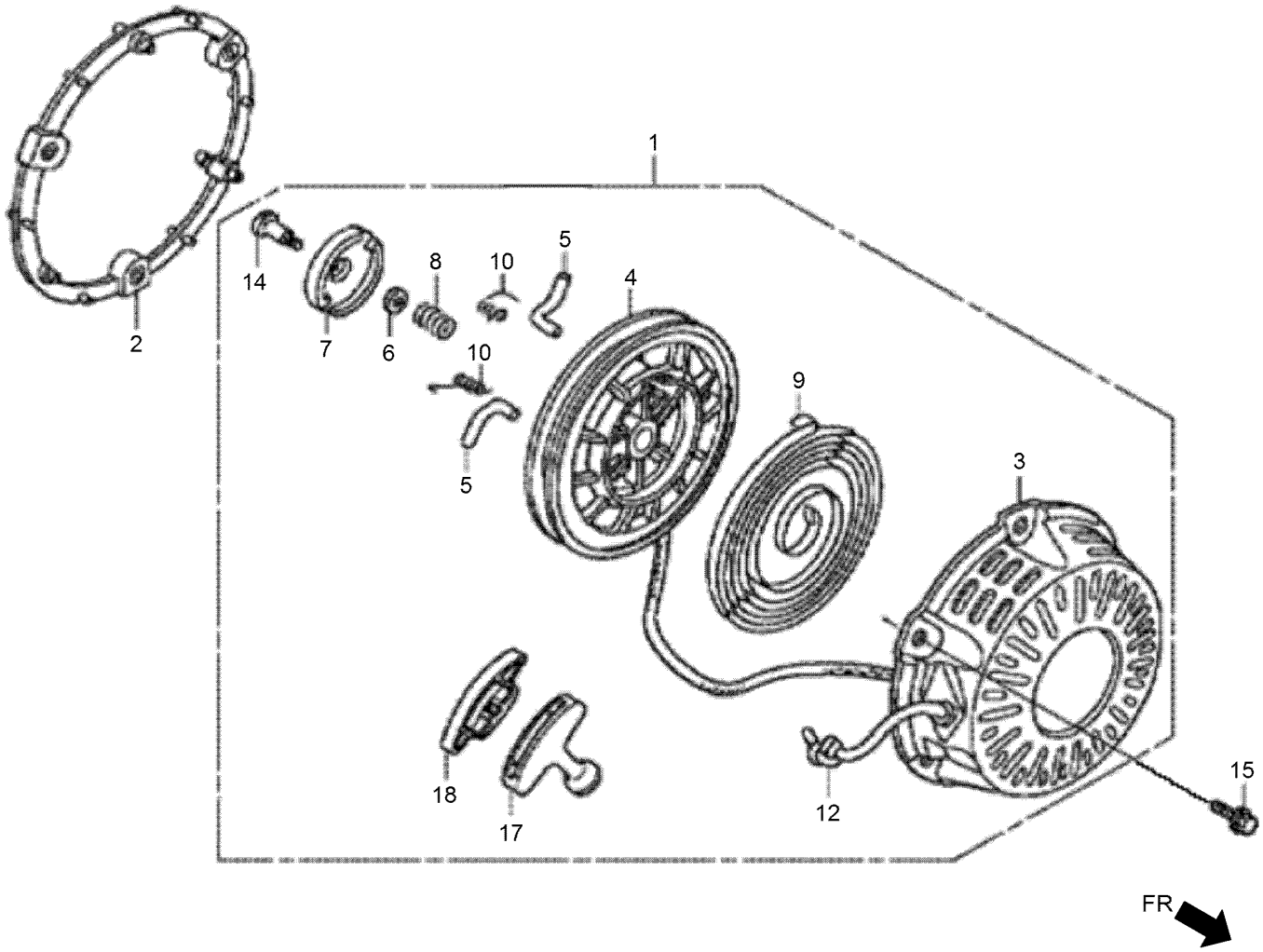

# Recoil Starter Assembly (continued)

| Ref. | Part Number | Qty. | Description |
|---|---|---|---|
| 1 | 138-9123 | 1 | Starter ASM-Recoil |
| 2 | 132-0485 | 1 | Spacer-Recoil Starter Mtg |
| 3 | 132-0486 | 1 | Recoil Starter Case ASM (R280) |
| 4 | 132-0489 | 1 | Reel-Recoil Starter |
| 5 | 132-0491 | 2 | Ratchet-Starter |
| 6 | 132-0492 | 1 | Plate-Friction |
| 7 | 132-0493 | 1 | Guide-Ratchet |
| 8 | 132-0494 | 1 | Spring-Friction |
| 9 | 132-0495 | 1 | Spring-Recoil Starter |
| 10 | 132-0497 | 2 | Spring-Return |
| 12 | 132-0507 | 1 | Rope-Recoil Starter |
| 14 | 132-0579 | 1 | Screw-Setting |
| 15 | 131-8223 | 3 | Bolt-Flange-6X18 |
| 17 | 132-0502 | 1 | Knob-Recoil Starter |
| 18 | 132-0509 | 1 | Knob-Reinforcement |

# Fan Cover Assembly

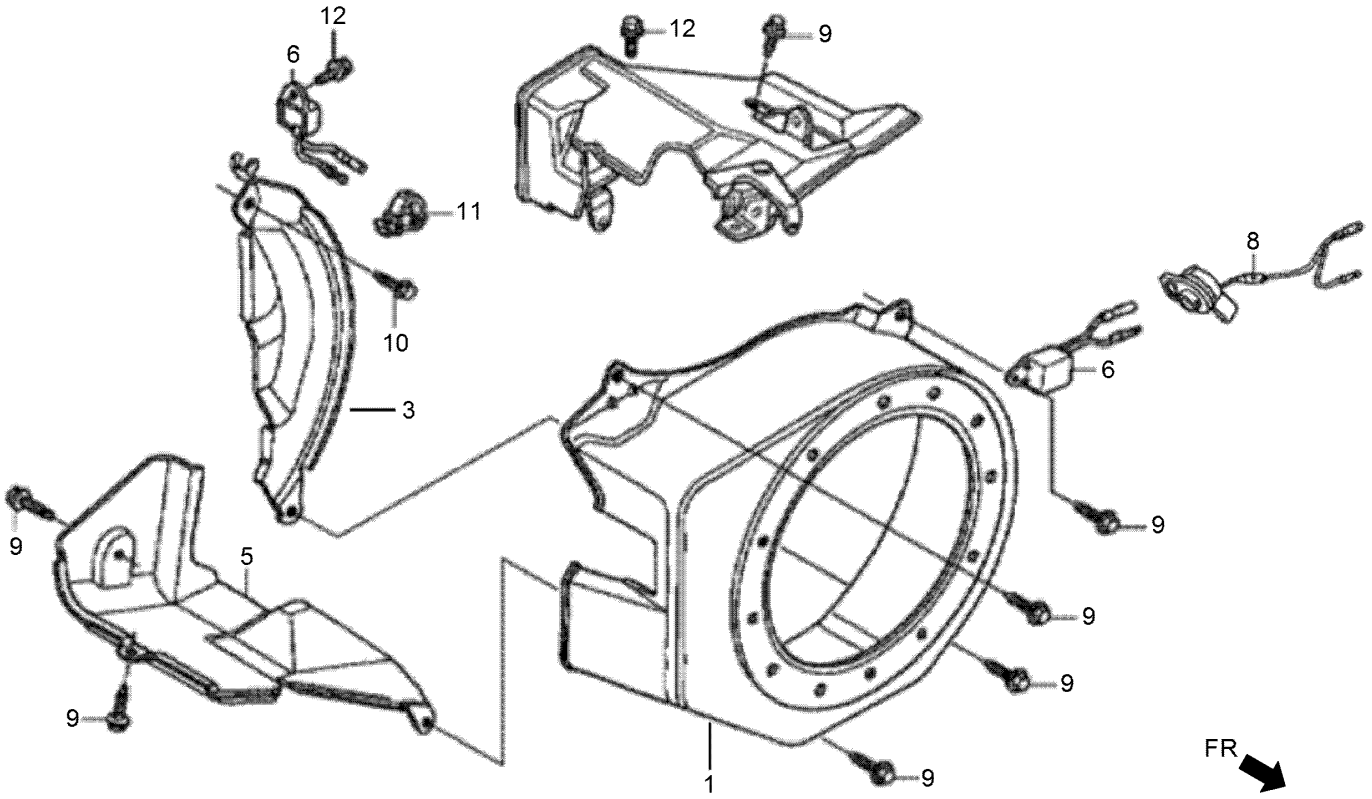

# Fan Cover Assembly (continued)

| Ref. | Part Number | Qty. | Description |
|---|---|---|---|
| 1 | 132-0464 | 1 | Fan Cover ASM (R280) |
| 3 | 132-0469 | 1 | Side Plate ASM |
| 5 | 132-0473 | 1 | Shroud ASM |
| 6 | 132-0529 | 1 | Alert Unit-Oil |
| 8 | 132-0530 | 1 | Switch ASM-Engine Stop |
| 9 | 132-4880 | 6 | Bolt-Flange-6X12 |
| 10 | 132-0605 | 1 | Bolt-Flange-6X20 |
| 11 | 132-0641 | 1 | Clip-Harness |
| 12 | 131-8220 | 1 | Bolt-Flange-6X8 |

# Carburetor Assembly

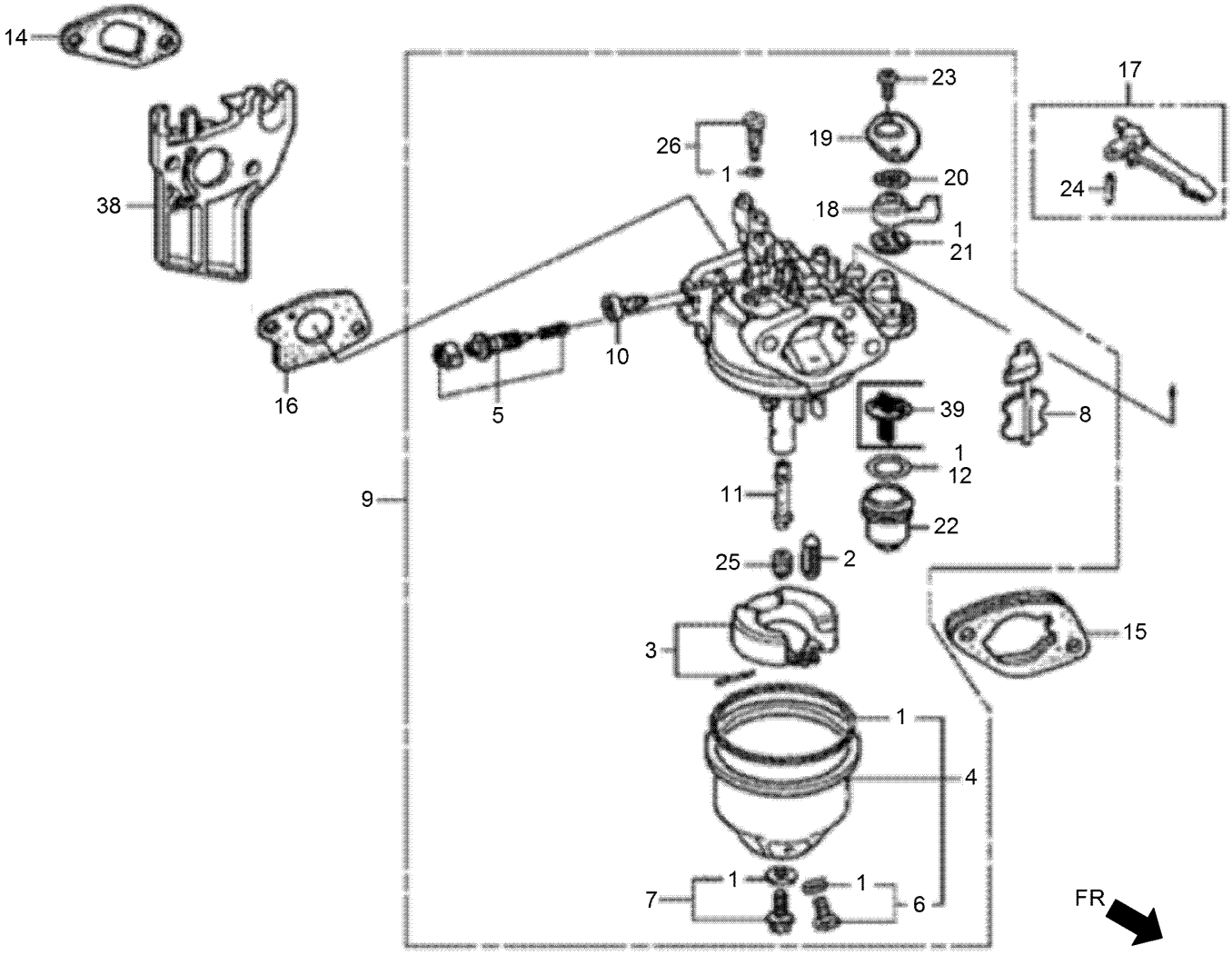

# Carburetor Assembly (continued)

| Ref. | Part Number | Qty. | Description |
|---|---|---|---|
| 1 | 132-0239 | 1 | Gasket Set |
| 2 | 132-0241 | 1 | Valve Set-Float |
| 3 | 132-0242 | 1 | Float Set |
| 4 | 132-0247 | 1 | Chamber Set-Float |
| 5 | 132-0250 | 1 | Screw Set-Pilot |
| 6 | 132-0251 | 1 | Screw Set-Drain |
| 7 | 132-0253 | 1 | Screw Set |
| 8 | 132-0257 | 1 | Choke Set |
| 9 | 132-0265 | 1 | Carburetor ASM |
| 10 | 132-0268 | 1 | Screw-Throttle Stop |
| 11 | 132-0272 | 1 | Nozzle-Main |
| 12 | 132-0276 | 1 | Packing-Fuel Strainer Cup |
| 14 | 132-0281 | 1 | Packing-Insulator |
| 15 | 132-0284 | 1 | Carburetor Spacer ASM |
| 16 | 132-0287 | 1 | Packing-Carburetor |
| 17 | 132-0343 | 1 | Choke Lever ASM |
| 18 | 132-0359 | 1 | Lever-Cock |
| 19 | 132-0360 | 1 | Plate-Lever Setting |
| 20 | 132-0362 | 1 | Spring-Cock Lever |
| 21 | 132-0364 | 1 | Packing-Fuel Cock |
| 22 | 132-0366 | 1 | Cup-Fuel Strainer |
| 23 | 132-0676 | 2 | Screw-Pan-3X6 |
| 24 | 132-0698 | 1 | Pin-Spring-2X12 |
| 25 | 131-8237 | 1 | Jet-Main, No. 75 |
| 26 | 131-8239 | 1 | Jet Set-Pilot, No. 40 |
| 38 | 132-0278 | 1 | Insulator-Carburetor |
| 39 | 132-0365 | 1 | Filter-Cup |

# Air Cleaner Assembly

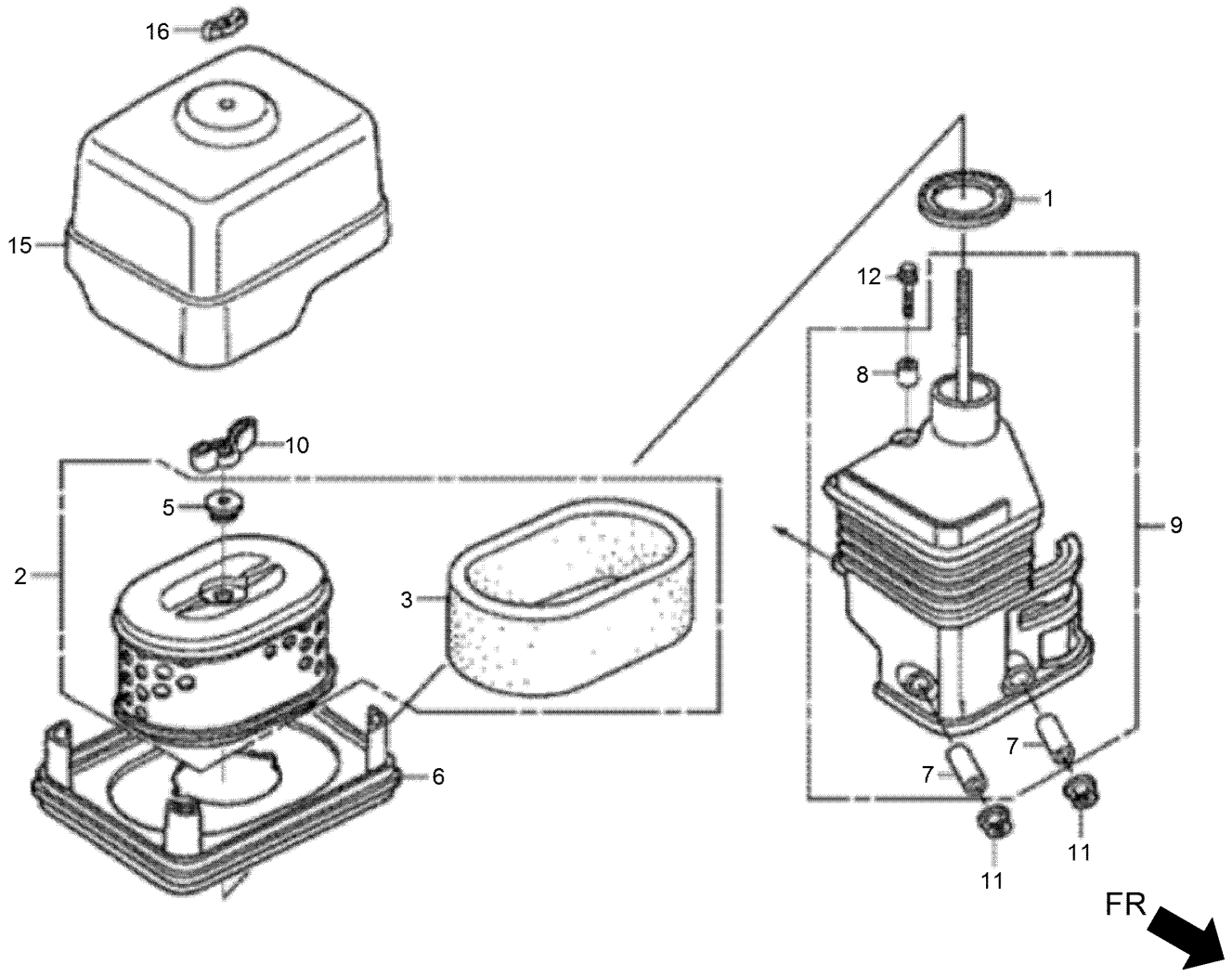

# Air Cleaner Assembly (continued)

| Ref. | Part Number | Qty. | Description |
|---|---|---|---|
| 1 | 132-0291 | 1 | Packing-Elbow |
| 2 | 132-0367 | 1 | Element-Air Cleaner |
| 3 | 132-0372 | 1 | Filter-Outer |
| 5 | 132-0391 | 1 | Grommet-Air Cleaner |
| 6 | 132-0392 | 1 | Nose-Silencer |
| 7 | 132-0393 | 2 | Collar-Air Cleaner |
| 8 | 132-0394 | 1 | Collar B-Air Cleaner |
| 9 | 132-0396 | 1 | Elbow Comp-Air Cleaner |
| 10 | 132-0631 | 1 | Nut-Tool Box Setting |
| 11 | 132-4881 | 2 | Nut-Flange-6Mm |
| 12 | 131-8224 | 1 | Bolt-Flange-6X20 |
| 15 | 132-0388 | 1 | Cover-Air Cleaner |
| 16 | 132-0630 | 1 | Nut-Air Cleaner |

# Muffler Assembly

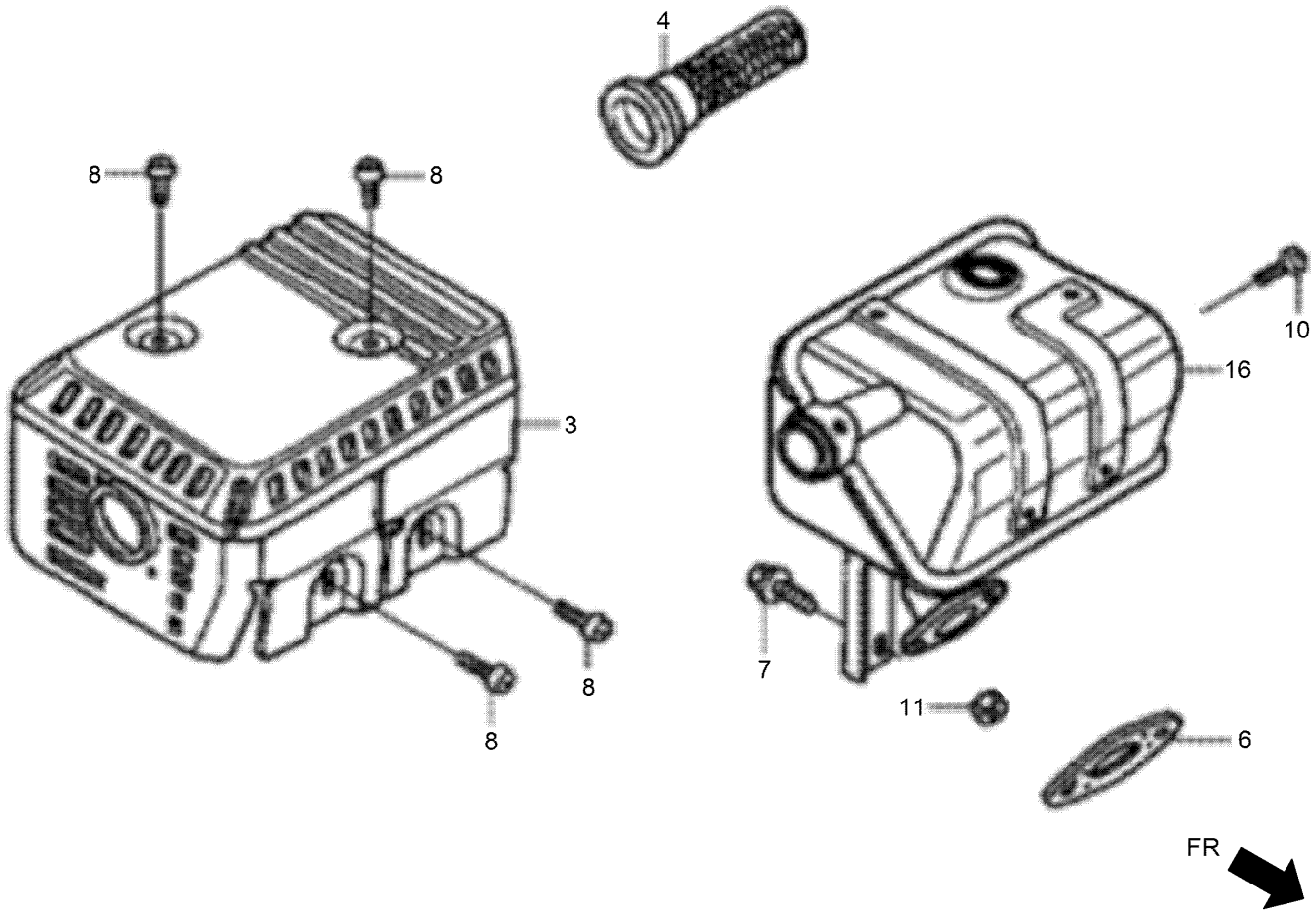

# Muffler Assembly (continued)

| Ref. | Part Number | Qty. | Description |
|---|---|---|---|
| 3 | 132-0453 | 1 | Muffler Protector ASM |
| 4 | 132-0456 | 2 | Arrester-Spark |
| 6 | 132-0457 | 2 | Gasket-Muffler |
| 7 | 132-0600 | 1 | Bolt-Flange-6X13 |
| 8 | 132-0616 | 4 | Screw-Tapping-5X8 |
| 10 | 132-0617 | 1 | Screw-Tapping-4X6 |
| 11 | 132-0684 | 2 | Nut-Hex-8Mm |
| 16 | 132-0446 | 1 | Muffler ASM |

# Fuel Tank Assembly

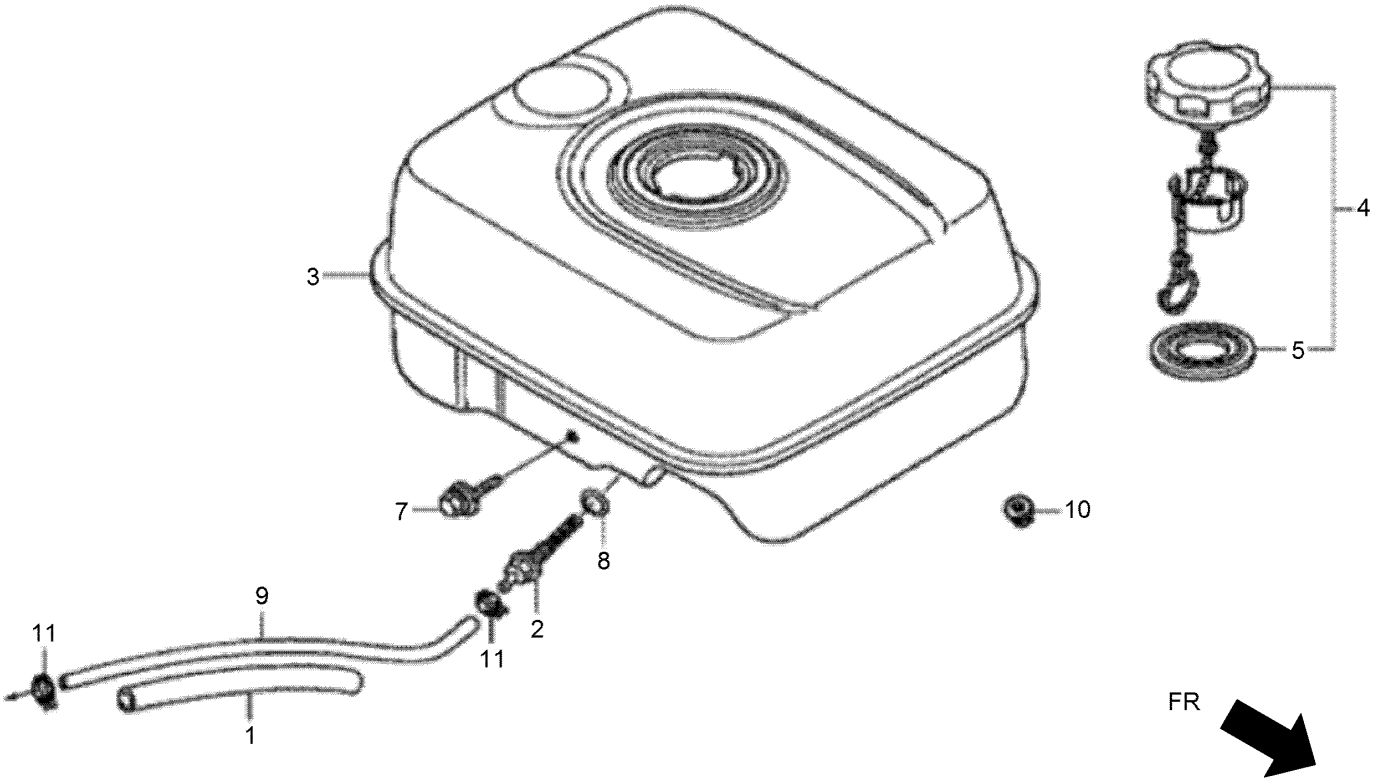

# Fuel Tank Assembly (continued)

| Ref. | Part Number | Qty. | Description |
|---|---|---|---|
| 1 | 132-0349 | 1 | Rubber-Supporter |
| 2 | 132-0361 | 1 | Joint-Fuel Tank |
| 3 | 132-0397 | 1 | Fuel Tank ASM (Nh31) |
| 4 | 132-0414 | 1 | Fuel Filler Cap ASM |
| 5 | 132-0431 | 1 | Packing-Fuel Filler Cap |
| 7 | 132-0583 | 1 | Bolt-Flange-6X34 |
| 8 | 132-0668 | 1 | O-Ring-14Mm |
| 9 | 132-0669 | 1 | Tube-Fuel-4.5X145 |
| 10 | 132-4881 | 2 | Nut-Flange-6Mm |
| 11 | 131-8211 | 2 | Clamp-Tube |

# Flywheel Assembly

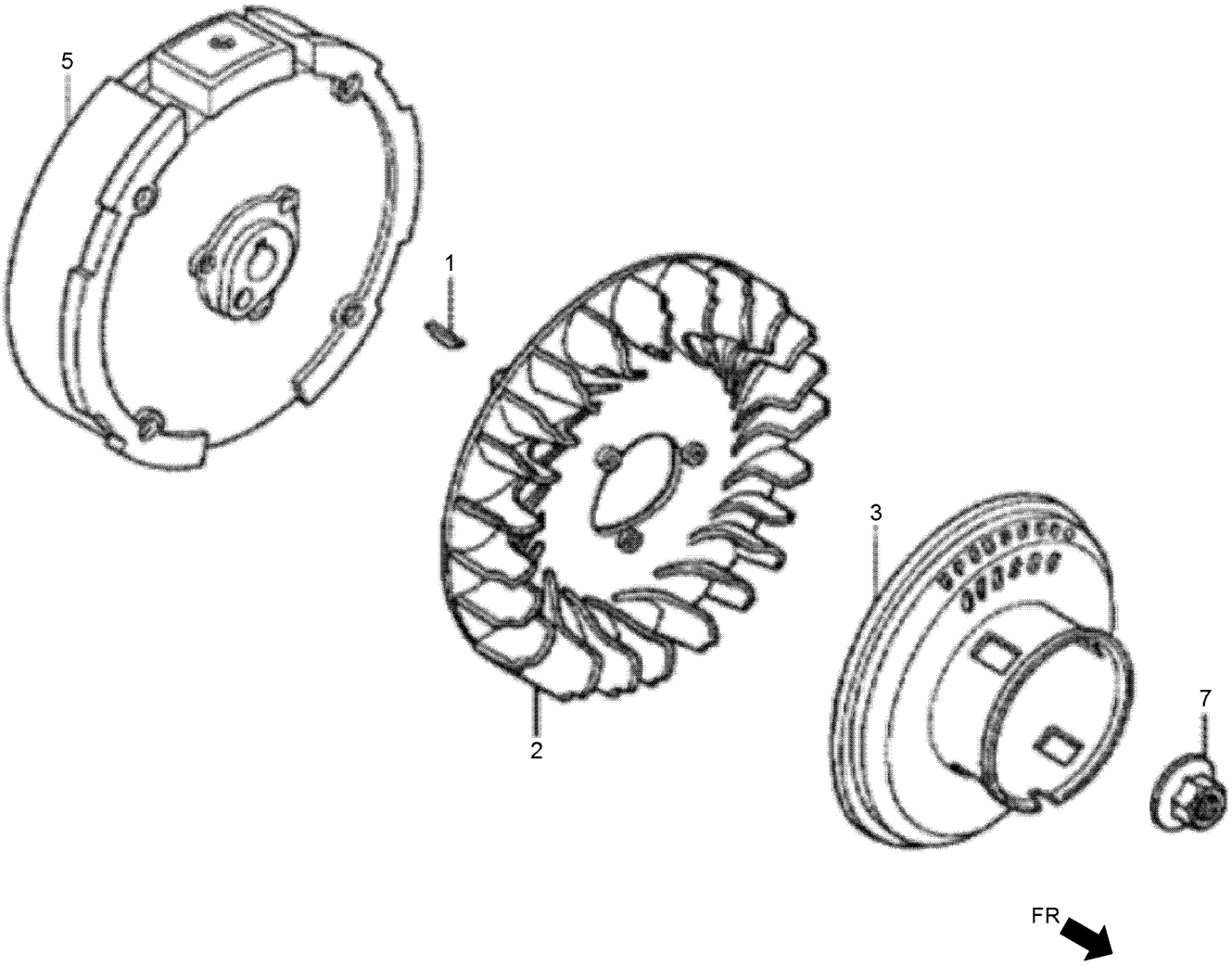

# Flywheel Assembly (continued)

| Ref. | Part Number | Qty. | Description |
|---|---|---|---|
| 1 | 132-0167 | 1 | Key-Special Woodruff-25X18 |
| 2 | 132-0461 | 1 | Fan-Cooling |
| 3 | 132-0499 | 1 | Starter Pulley ASM |
| 5 | 132-0519 | 1 | Flywheel ASM |
| 7 | 132-0625 | 1 | Nut-Special-14Mm |

# Ignition Coil Assembly

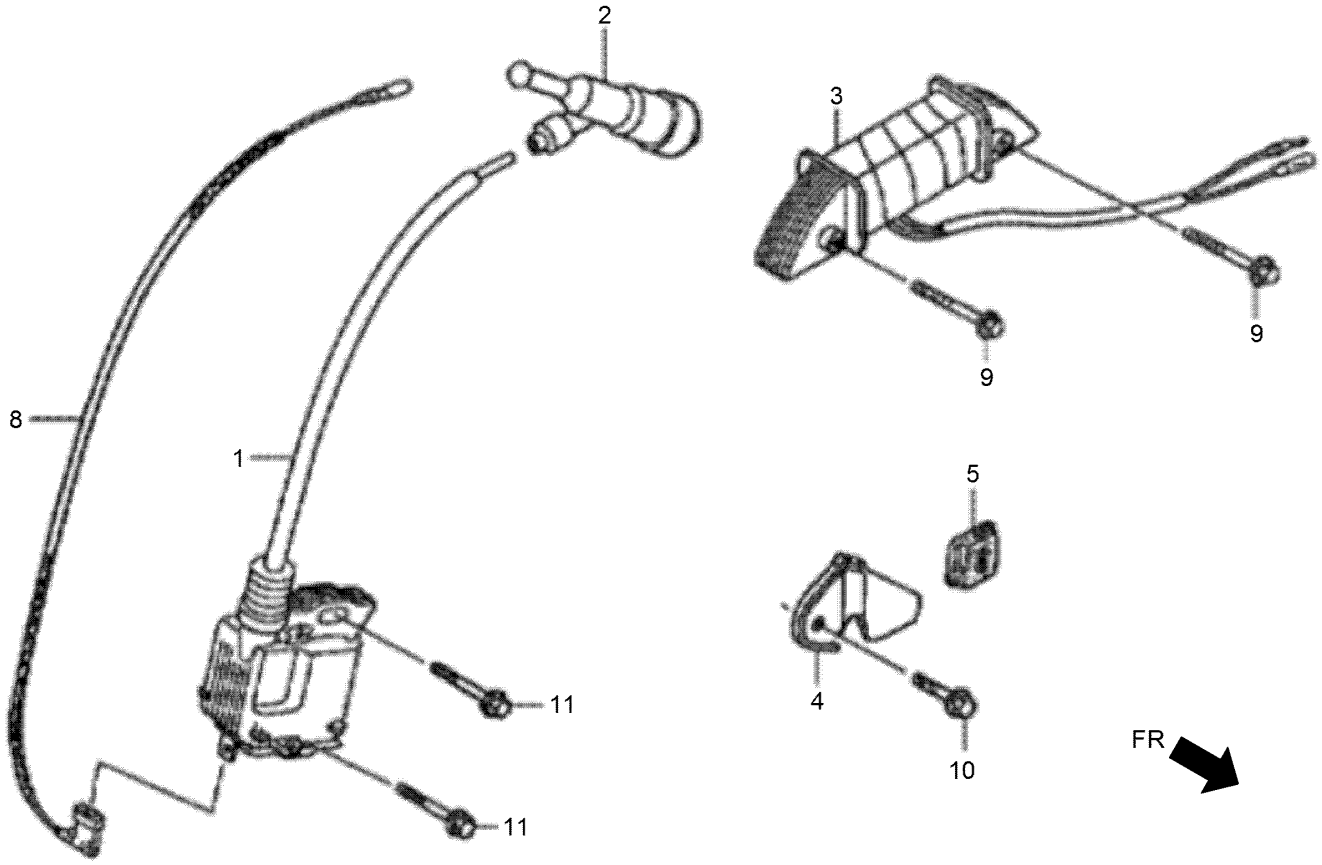

# Ignition Coil Assembly (continued)

| Ref. | Part Number | Qty. | Description |
|---|---|---|---|
| 1 | 132-0510 | 1 | Coil ASM-Ignition |
| 2 | 132-0515 | 1 | Cap ASM-Noise Suppressor |
| 3 | 132-0521 | 1 | Coil ASM-Lamp |
| 4 | 132-0522 | 1 | Clamper-Cord |
| 5 | 132-0523 | 1 | Grommet-Cord |
| 8 | 132-0533 | 1 | Cord-Stop Switch |
| 9 | 132-0596 | 2 | Bolt-Flange-6X28 |
| 10 | 132-0604 | 1 | Bolt-Flange-5X10 |
| 11 | 132-0620 | 2 | Bolt-Flange-6X25 |

# Control Assembly

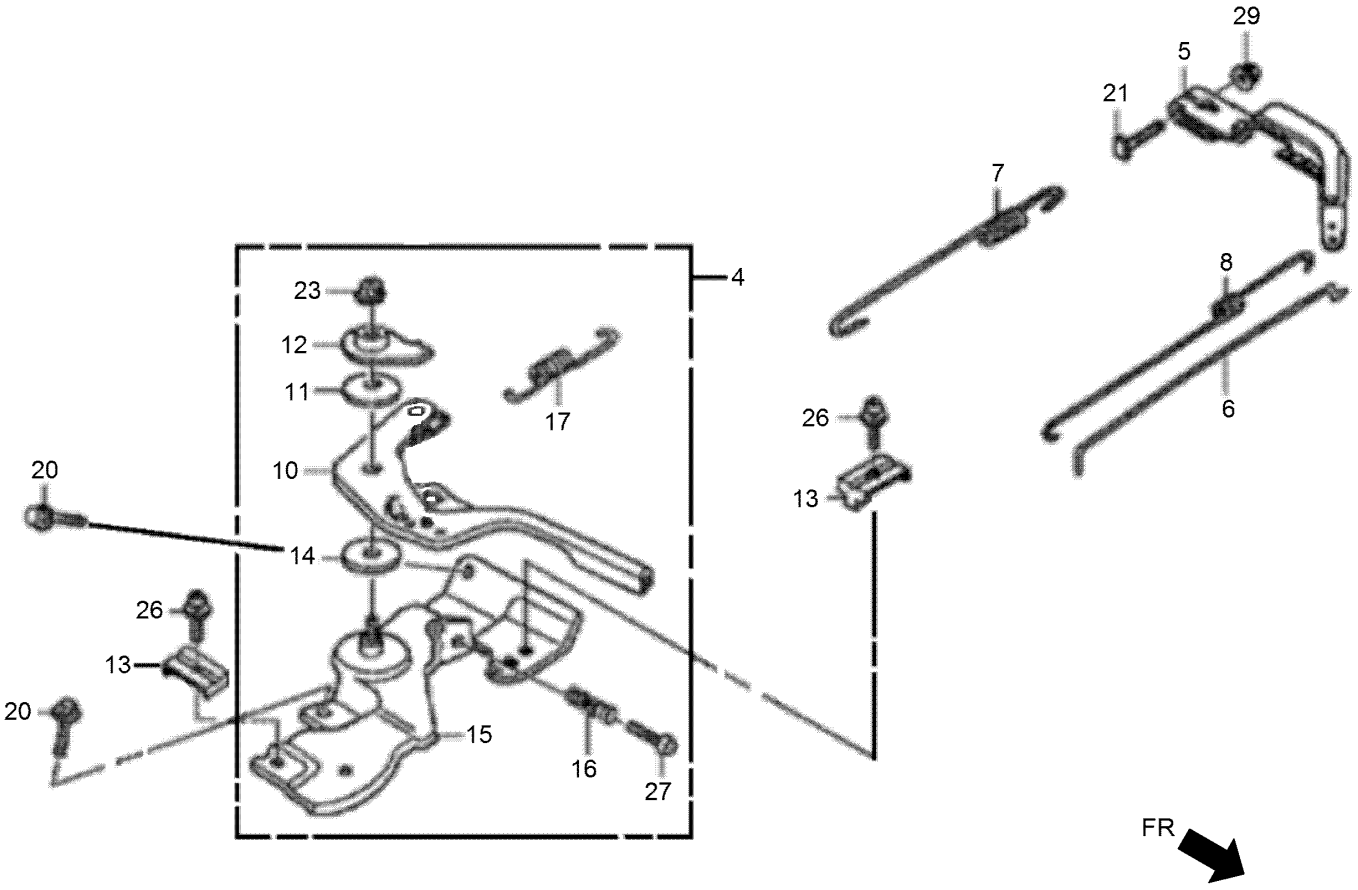

# Control Assembly (continued)

| Ref. | Part Number | Qty. | Description |
|---|---|---|---|
| 4 | 132-0292 | 1 | Control ASM |
| 5 | 132-0311 | 1 | Arm-Governor |
| 6 | 132-0316 | 1 | Rod-Governor |
| 7 | 132-0320 | 1 | Spring-Governor |
| 8 | 132-0324 | 1 | Spring-Throttle Return |
| 10 | 132-0328 | 1 | Lever-Control |
| 11 | 132-0329 | 1 | Spring-Lever |
| 12 | 132-0330 | 1 | Washer-Control Lever |
| 13 | 132-0331 | 1 | Holder-Cable |
| 14 | 132-0332 | 1 | Spacer-Control Lever |
| 15 | 132-0337 | 1 | Control Base ASM |
| 16 | 132-0340 | 1 | Spring-Control Adjusting |
| 17 | 132-0341 | 1 | Spring-Cable Return |
| 20 | 132-4880 | 2 | Bolt-Flange-6X12 |
| 21 | 132-0597 | 1 | Bolt-Governor Arm |
| 23 | 132-0619 | 1 | Nut-Self-Lock-6Mm |
| 26 | 132-0678 | 1 | Screw-Pan-5X16 |
| 27 | 132-0679 | 1 | Screw-Pan-5X25 |
| 29 | 132-4881 | 1 | Nut-Flange-6Mm |

# Label Assembly

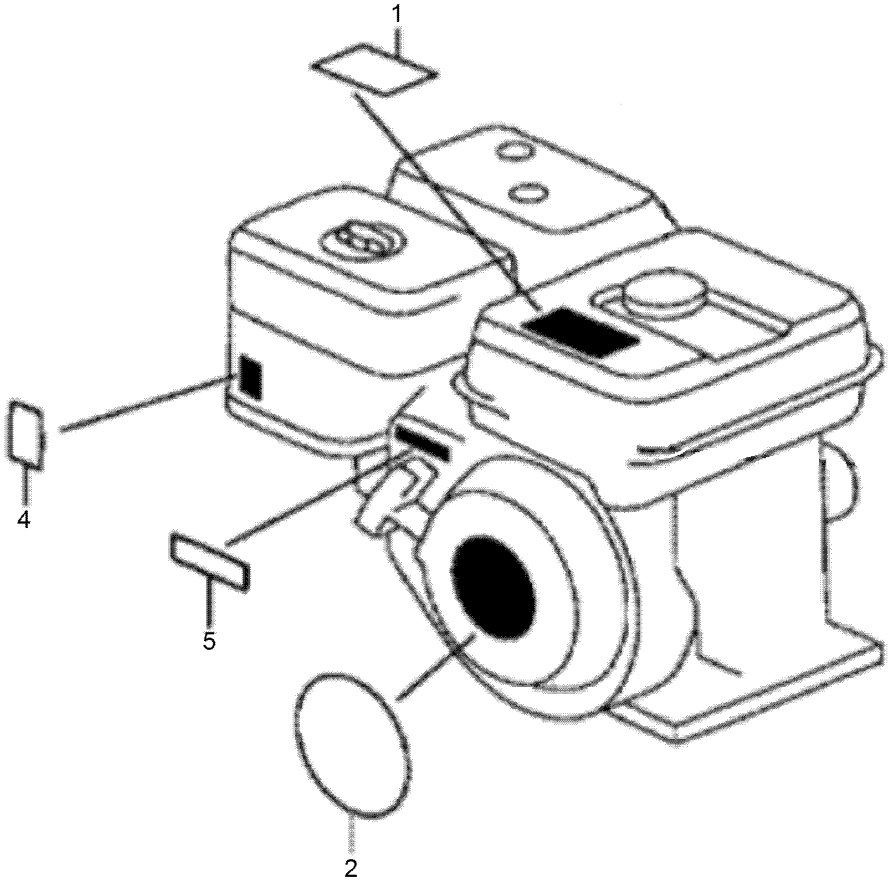

# Label Assembly (continued)

| Ref. | Part Number | Qty. | Description |
|---|---|---|---|
| 1 | 132-0559 | 1 | Mark-Operator Caution |
| 2 | 132-0561 | 1 | Emblem |
| 4 | 132-0566 | 1 | Mark-Choke |
| 5 | 132-0567 | 1 | Mark-Throttle Indication |

# Wrench

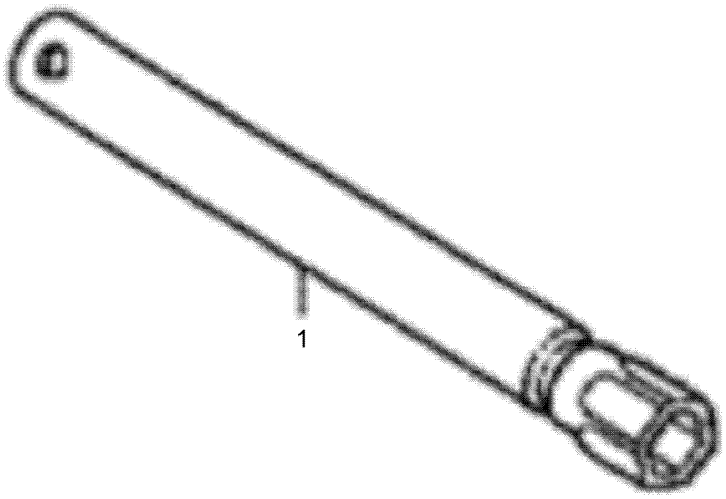

# Wrench (continued)

| Ref. | Part Number | Qty. | Description |
|---|---|---|---|
| 1 | 132-0572 | 1 | Wrench-Spark Plug |

# Decal Assembly

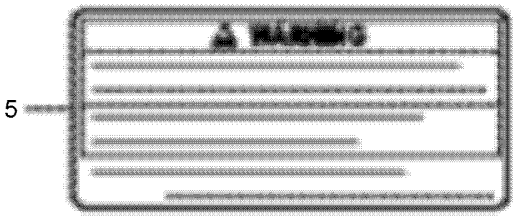


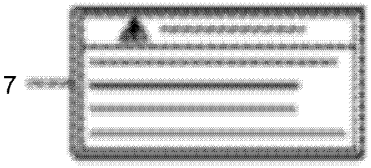


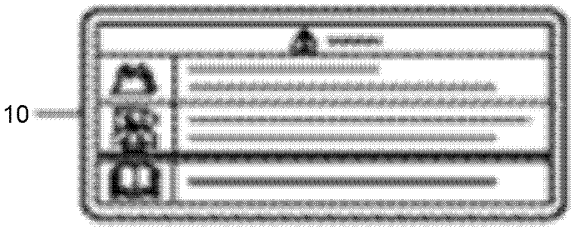

# Decal Assembly (continued)

| Ref. | Part Number | Qty. | Description |
|---|---|---|---|
| 5 | 132-0552 | 1 | Mark-Operator Caution (English) |
| 5 | 132-0553 | 1 | Mark-Operator Caution (French) |
| 7 | 132-0570 | 1 | Mark-Exhaust Caution (English) |
| 7 | 132-0571 | 1 | Mark-Exhaust Caution (French) |
| 10 | 132-0557 | 1 | Mark-Operator Caution (Chinese) |

# Gasket Kit

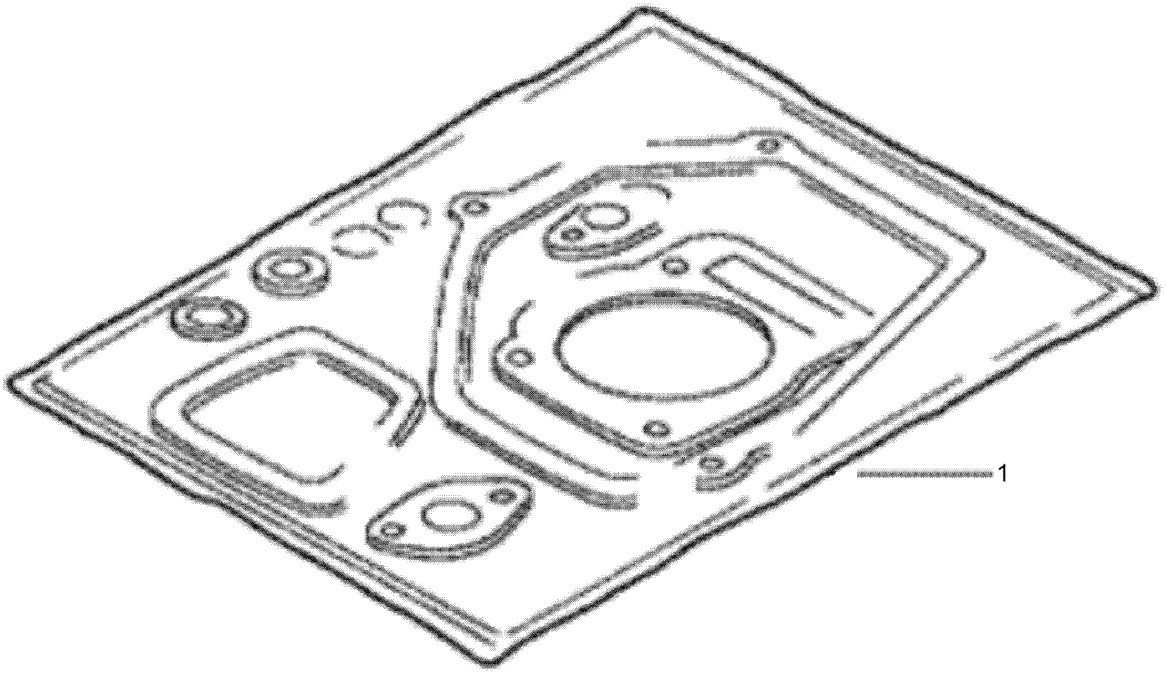

# Gasket Kit (continued)

| Ref. | Part Number | Qty. | Description |
|---|---|---|---|
| 1 | 132-0100 | 1 | Gasket Kit |

# Attachments and Accessories

## For 44913 GreensPro 1260 Greens Roller

| Product Name | Model/Part |
|---|---|
| Filter-Oil, Hyd | 1-633750 |
| Premium All Season Hydraulic Fluid (5 Gallon Pail) | 108-1178 |
| Premium Engine Oil 10w30 (5 Gallon Pail) | 121-6393 |
| Roller Scraper Kit | 44911 |
| Wireless Hour Meter Kit | 44927 |

**Notes:**

TORO®

Count on it.