Form No. 3405-671 Rev F

TORO®

Count on it.

Parts Catalog

48in TITAN® HD 1500 Series

Riding Mower

Model No. 74450—Serial No. 400000000 and Up

Register at www.Toro.com.
Original Instructions (EN)

3405-671 F

Ordering Replacement Parts

To order replacement parts, please supply the part number, the quantity, and the description of each part desired.

Understanding Reference Numbers

Each identified part in an illustration has a reference number. The reference number for a part also appears in the parts list, along with other information about the part.

This catalog uses two special reference number formats, one to indicate parts in a service assembly and another to indicate the quantity of a given part in an illustration.

Service Assembly Reference Numbers

Parts in service assemblies have reference numbers in the form a:b. The a represents the reference number of the entire service assembly and the b represents a sequential number unique to each part within the service assembly.

For example, a wheel assembly might be identified by reference number 6, the tire by 6:1, the valve by 6:2, and the wheel by 6:3. When you order the assembly identified by reference number 6, you receive all parts identified by reference numbers 6:1,6:2, and 6:3. However, you may also order any part individually. Reference numbers of this type appear in illustration and in parts lists.

Reference Numbers Indicating Quantity

In an illustration, if a reference number indicates more than one part, the reference number has the form nX y. The n represents the quantity of the part, the X is the multiplication symbol, and the y represents the reference number.

For example, in an illustration, the reference number 2X 37 means that two of the parts identified by reference number 37 are indicated.

Contents

Frame and Roll-Over Protection System Assembly . . . 4
Fork and Caster Wheel Assembly . . . 6
Wheel and Tire Assembly No. 126-7592 . . . 8
Roll-Over Protection System Assembly No. 126-9526 . . . 10
Hydraulic Assembly . . . 12
LH Transaxle Assembly No. 135-0140 . . . 14
RH Transaxle Assembly No. 135-0139 . . . 16
Control Console and Guard Assembly . . . 18
Fuel Tank and Vent Hose Assembly . . . 20
Fuel Tank Assembly No. 126-4724 . . . 22
Seat Mount Assembly . . . 24
Seat Latch Assembly . . . 26
Seat Assembly No. 130-0801 . . . 28
Motion Control Assembly . . . 30
LH Motion Control Assembly . . . 32
RH Motion Control Assembly . . . 34
Electrical System Assembly . . . 36
Wire Harness Assembly No. 126-5803 . . . 38
Deck Lift Assembly . . . 40
Deck Strut Assembly No. 126-8365 . . . 42
Engine Assembly . . . 44
Deck Assembly . . . 46
Deck Decal Assembly No. 126-8956 . . . 48
Deflector Assembly No. 120-2451 . . . 50
Fuel System Assembly with Non-Canister Style Air Filter . . . 52
Carburetor Assembly with Non-Canister Style Air Filter . . . 54
Air Intake and Filtration Assembly with Non-Canister Style Air Filter . . . 56
Ignition and Electrical Assembly . . . 58
Crankcase and Crankshaft Assembly . . . 60
Governor Control Assembly . . . 62
Piston and Cylinder Head Assembly . . . 64
Blower Housing Assembly . . . 66
Gasket and Seal Kit . . . 68
Attachments and Accessories . . . 70

© 2019—The Toro® Company
8111 Lyndale Avenue South
Bloomington, MN 55420

Contact us at www.Toro.com.
Printed in the USA.
All Rights Reserved

Frame and Roll-Over Protection System Assembly

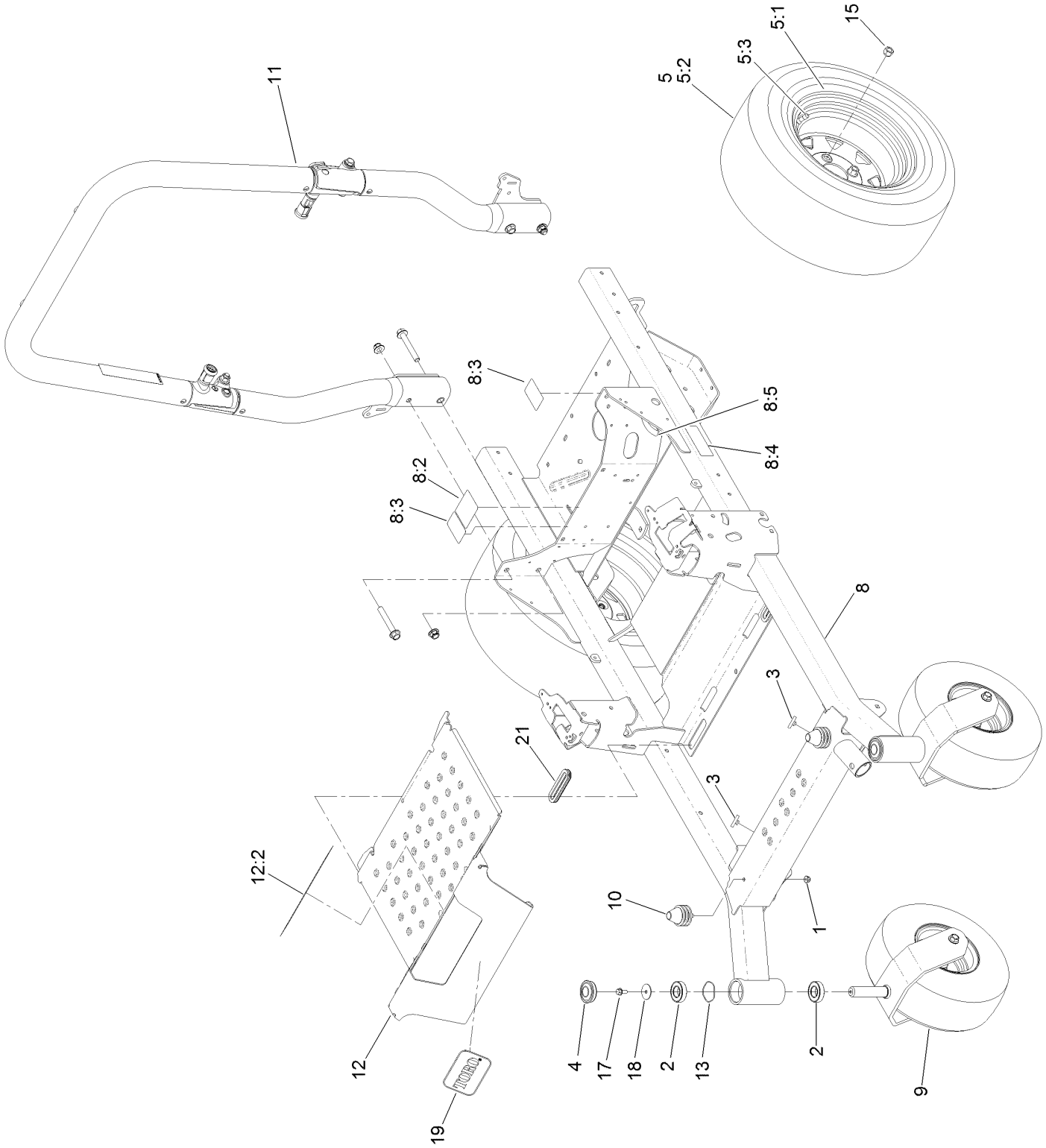

Frame and Roll-Over Protection System Assembly (continued)

Ref.	Part Number	Qty.	Description
1	104-8300	2	Nut-HF, NI
2	109-3678	4	Bearing-Ball
3	109-9233	2	Bumper-Push-In, Rubber
4	116-4348	2	Cap-Grease
5	126-3280	2	Wheel And Tire ASM
5:1	126-9074	1	Wheel
5:2	120-3271	1	Tire
5:3	232-27	1	Stem-Valve
8	126-4699	1	Frame ASM
8:2	109-6014	1	Decal-Routing, Belt
8:3	116-8588	2	Decal-Release, Drive
8:4	126-4363	2	Decal-Warning
8:5	127-6618	1	Strip-Seal

Ref.	Part Number	Qty.	Description
9		2	Front Caster ASM (W/Fork) ●
10	126-5491	2	Isolator
11	126-9526	1	ROPS ASM
12	126-5872	1	Pan-Floor
12:2	126-8383	1	Decal-Danger
13	126-5897	2	Spring
15	242-50	8	Nut-Lug
17	3234-5	2	Screw-HHF
18	3256-68	2	Washer-Flat
19	67-1300	1	Decal
21	126-7065	2	Grommet-Rubber

● Not serviced separately

Fork and Caster Wheel Assembly

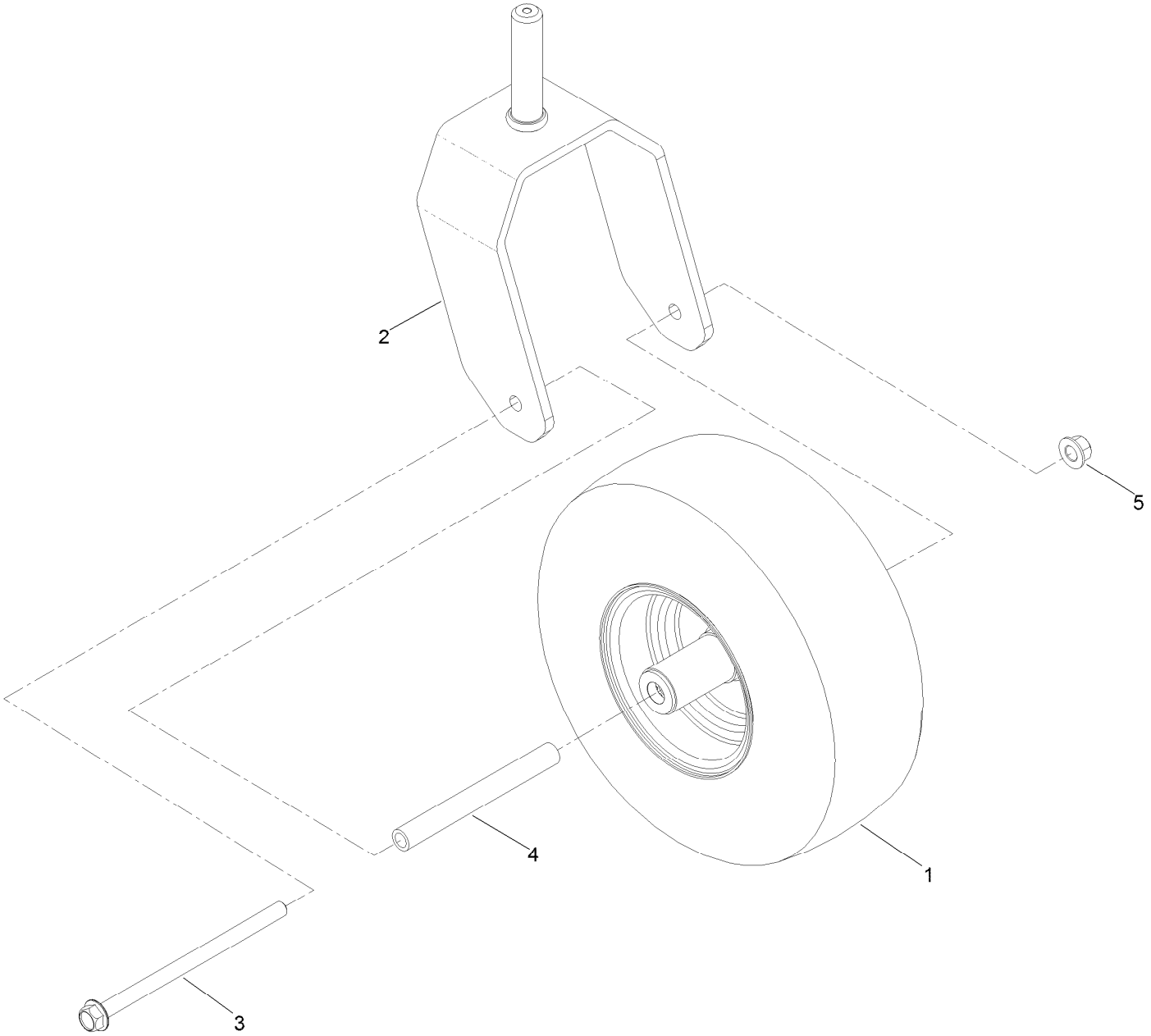

Fork and Caster Wheel Assembly (continued)

Ref.	Part Number	Qty.	Description
1	126-7592	1	Wheel And Tire ASM
2	126-4312-01	1	Fork-Caster
3	126-5389	1	Screw-HHF
4	127-0068	1	Spanner-Wheel, Caster
5	99-5107	1	Nut-Lock

Wheel and Tire Assembly No. 126-7592

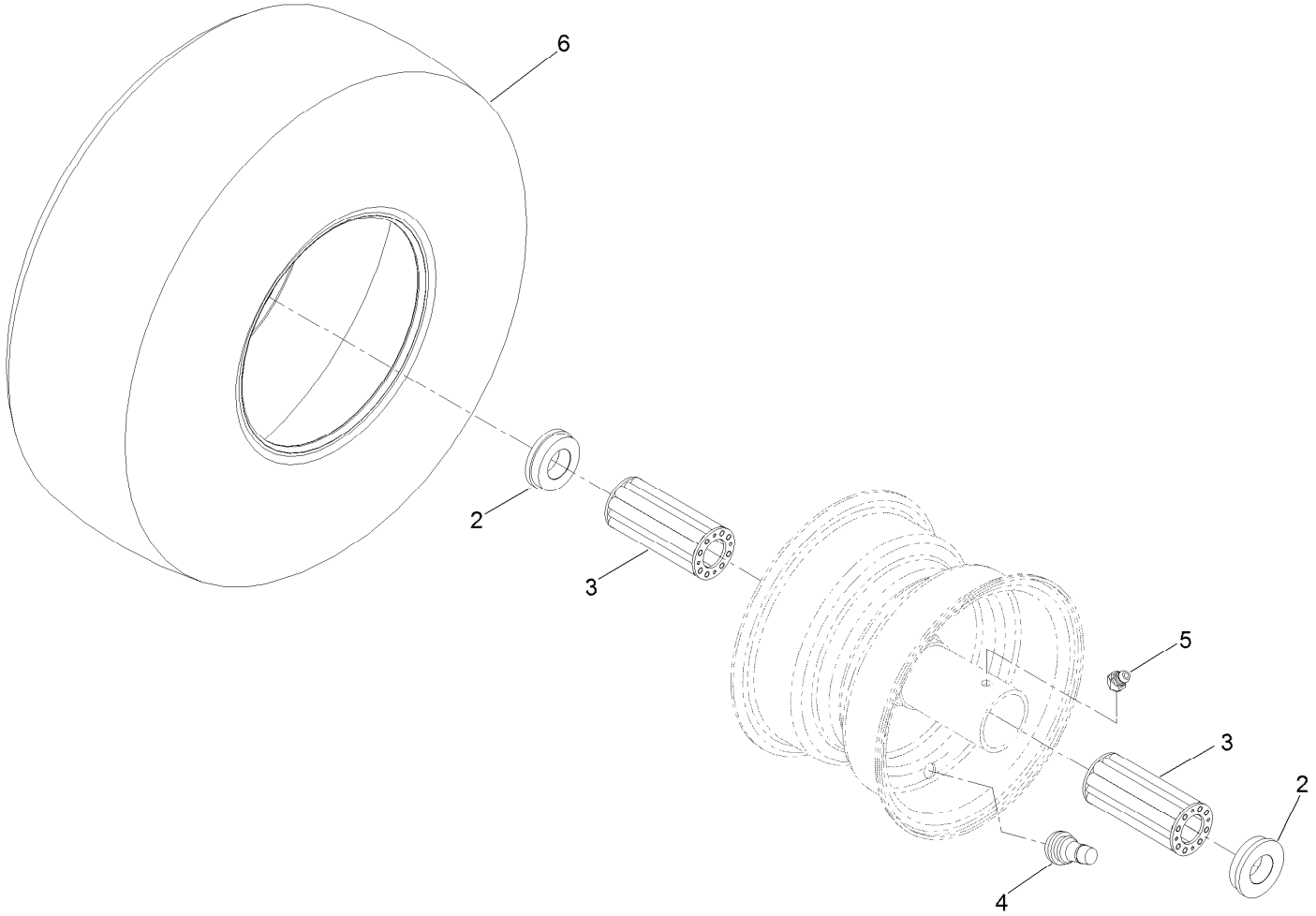

Wheel and Tire Assembly No. 126-7592 (continued)

Ref.	Part Number	Qty.	Description
2	130-0705	2	Bushing-Flange
3	135-4489	2	Bearing-Roller, Wheel
4	5108	1	Valve
5	120-7125	1	Fitting-Zerk
6	126-5959	1	Tire

Roll-Over Protection System
Assembly No. 126-9526

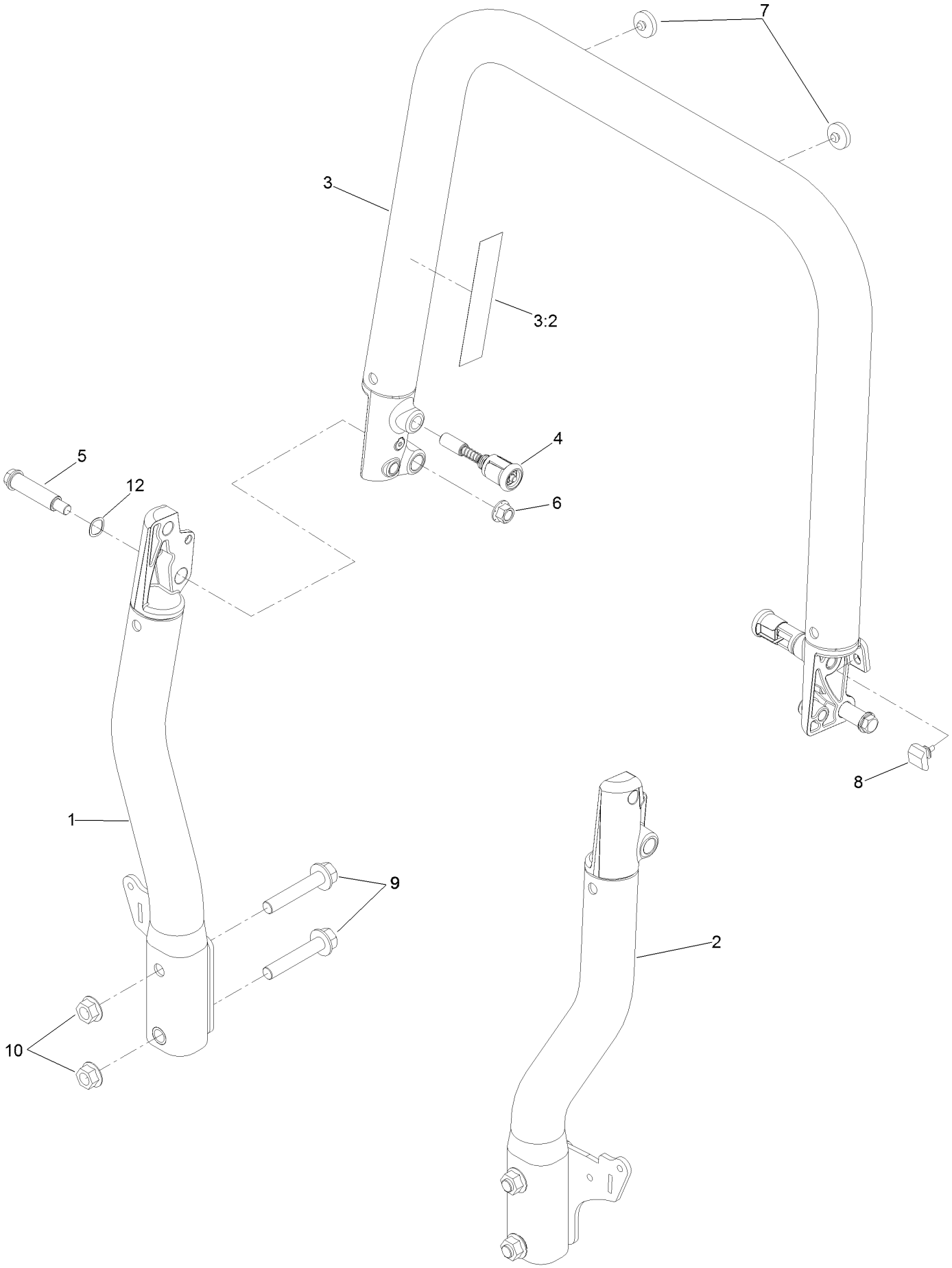

Roll-Over Protection System
Assembly No. 126-9526 (continued)

Ref.	Part Number	Qty.	Description
1		1	Tube-Upright, RH ●
2		1	Tube-Upright, LH ●
3	126-7838	1	Top Tube ASM
3:2	107-3069	1	Decal-Warning
4	116-0104	2	Pin-Spring
5	126-9209	2	Bolt-Shoulder
6	99-5107	2	Nut-Lock
7	109-9233	2	Bumper-Push-In, Rubber
8	109-5337	2	Bumper-ROPS
9	126-9303	4	Screw-HHF
10	131-0703	4	Nut-HHF
12	119-4164	2	Washer-Wave

● Not serviced separately

Hydraulic Assembly

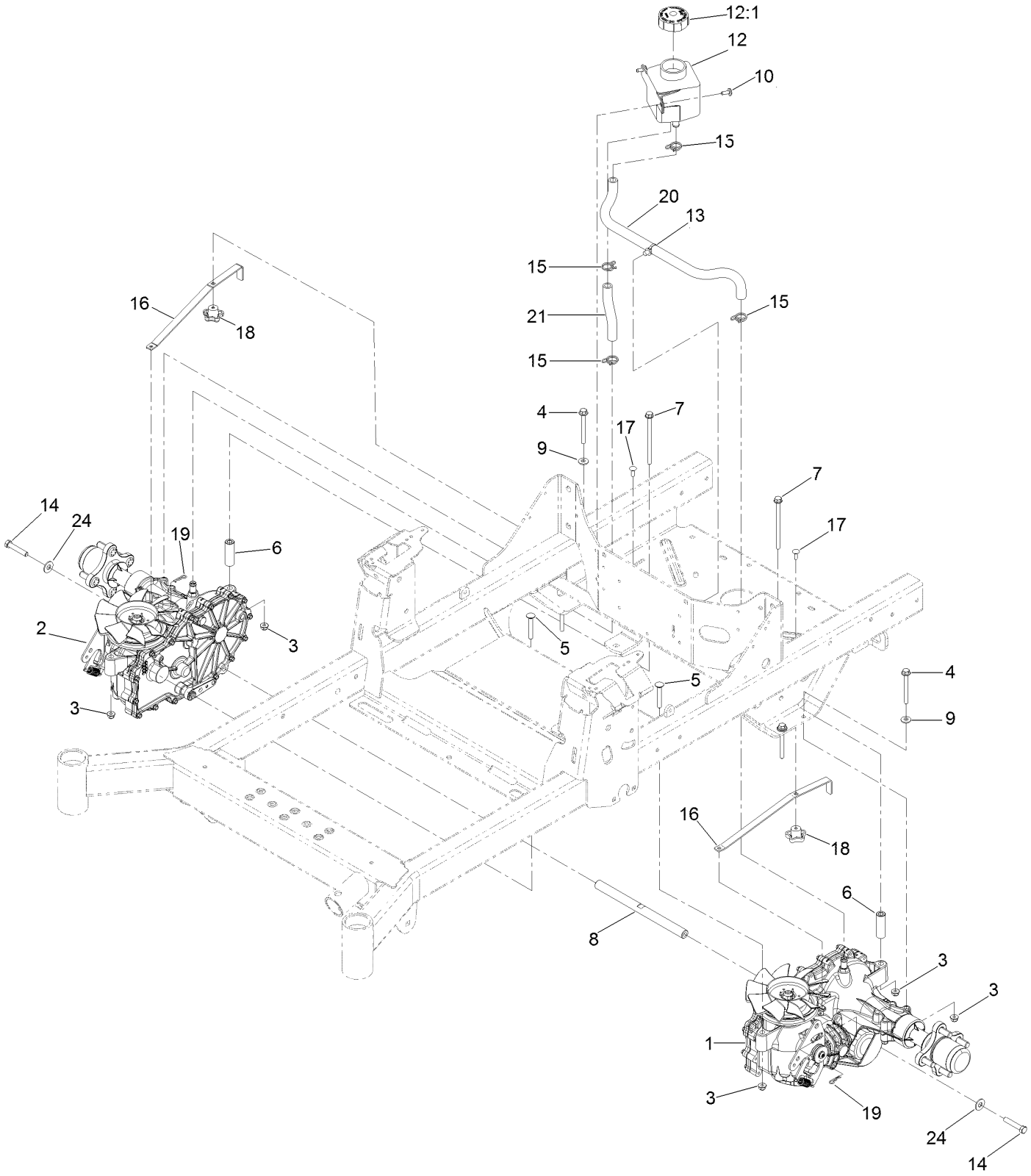

Hydraulic Assembly (continued)

Ref.	Part Number	Qty.	Description
1	135-0140	1	LH Transaxle ASM
2	135-0139	1	RH Transaxle ASM
3	104-8300	8	Nut-HF, NI
4	126-4687	4	Screw-HHF ●
5	3230-7	2	Bolt-CARR
6	116-5809	2	Spacer-Hydro
7	126-5896	2	Screw HHF
8	116-6833	1	Shaft-Spacer
9	1-303334	4	Washer-Spring
10	126-6266	2	Screw-Torx
12	109-2250	1	Tank-HYD
12:1	109-3320	1	Cap-Reservoir, HYD
13	32180-118	1	Clip-Tie
14	94-7972	2	Screw-HH W/Loctite
15	126-0327	4	Clamp-Hose
16	109-5395	2	Arm-Bypass, Hydro
17	3229-1	2	Bolt-CARR
18	108-6402	2	Knob-Handle
19	1-806003	2	Pin-Cotter
20	126-5668	1	Hose-Hydraulic
21	126-5669	1	Hose-Hydraulic
24	3256-4	2	Washer-Flat

● Use Pro-Lock, Nut Type (P/N 1-840022, .5ml tube) on threads.

LH Transaxle Assembly No. 135-0140

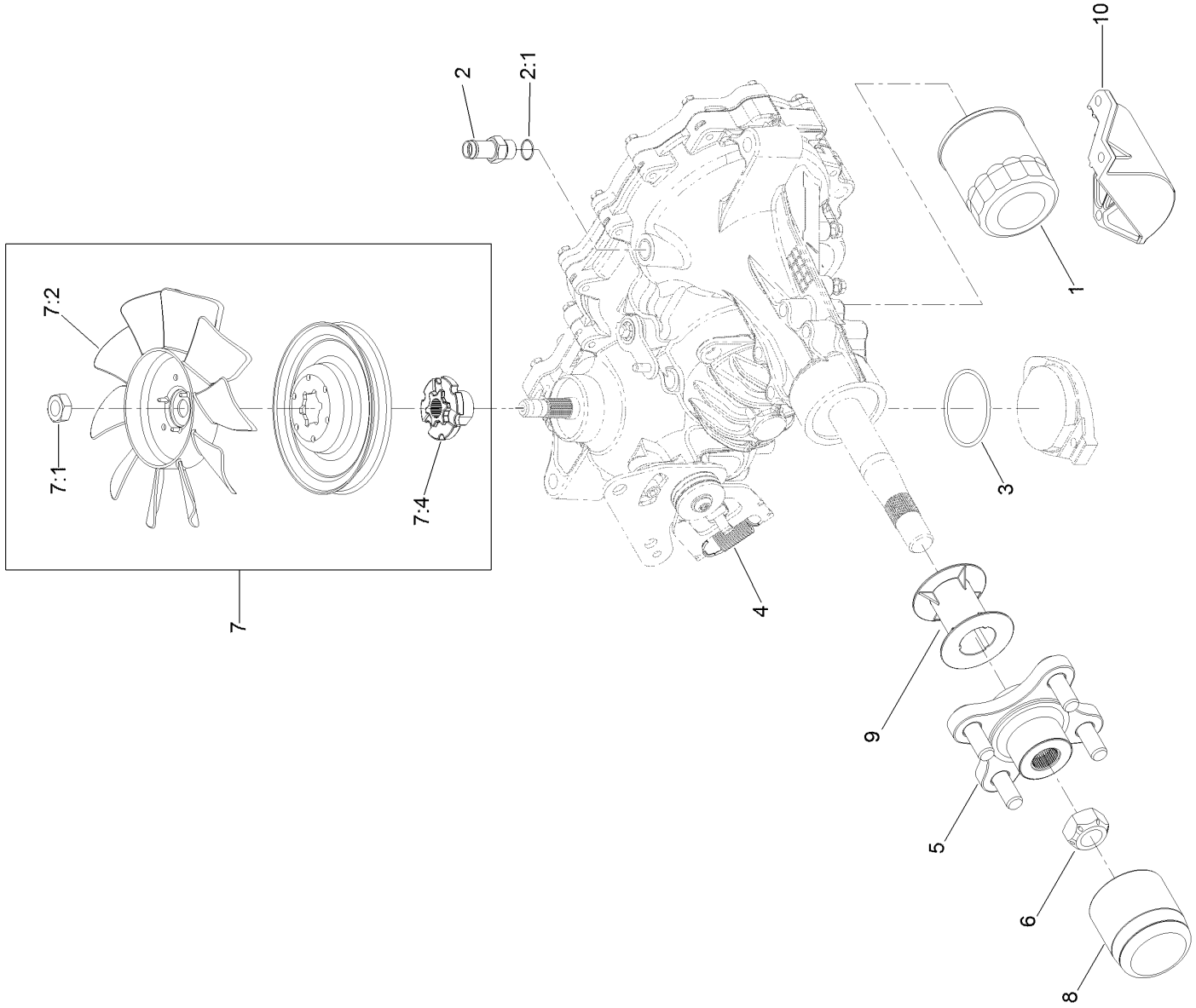

LH Transaxle Assembly No. 135-0140 (continued)

Ref.	Part Number	Qty.	Description
1	109-3321	1	Element-Oil Filter, HYD
2	109-3278	1	Adapter-Straight
2:1	237-42	1	O-Ring
3	109-3540	1	O Ring-Seal
4	109-5592	1	Spring-Extension
5	116-3872	1	Hub-Offset
6	109-3536	1	Nut-Hub
7	125-0059	1	Fan And Pulley Kit

Ref.	Part Number	Qty.	Description
7:1	116-9714	1	Nut-HJ
7:2	126-0226	1	Fan
7:4	116-9705	1	Hub-Pulley
8	116-6214	1	Cap-Axle, Long
9	116-6213	1	Tube-Axle
10	120-7979	1	Guard-Filter, LH
99	109-3537	1	Seal Kit ●

● Not illustrated

RH Transaxle Assembly No. 135-0139

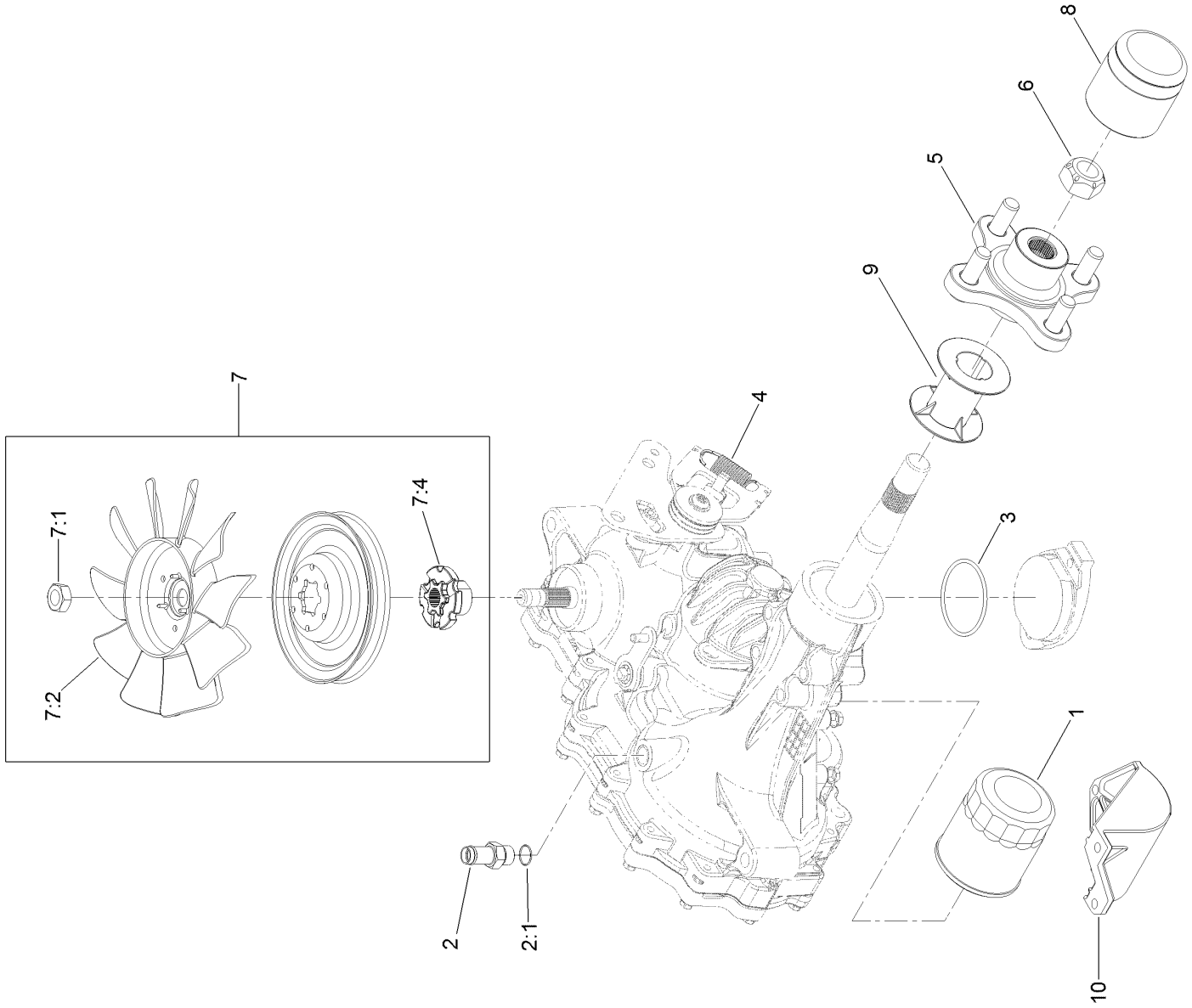

RH Transaxle Assembly No. 135-0139 (continued)

Ref.	Part Number	Qty.	Description
1	109-3321	1	Element-Oil Filter, HYD
2	109-3278	1	Adapter-Straight
2:1	237-42	1	O-Ring
3	109-3540	1	O Ring-Seal
4	109-5592	1	Spring-Extension
5	116-3872	1	Hub-Offset
6	109-3536	1	Nut-Hub
7	125-0059	1	Fan And Pulley Kit

Ref.	Part Number	Qty.	Description
7:1	116-9714	1	Nut-HJ
7:2	126-0226	1	Fan
7:4	116-9705	1	Hub-Pulley
8	116-6214	1	Cap-Axle, Long
9	116-6213	1	Tube-Axle
10	120-7981	1	Guard-Filter, RH
99	109-3537	1	Seal Kit ●

● Not illustrated

Control Console and Guard Assembly

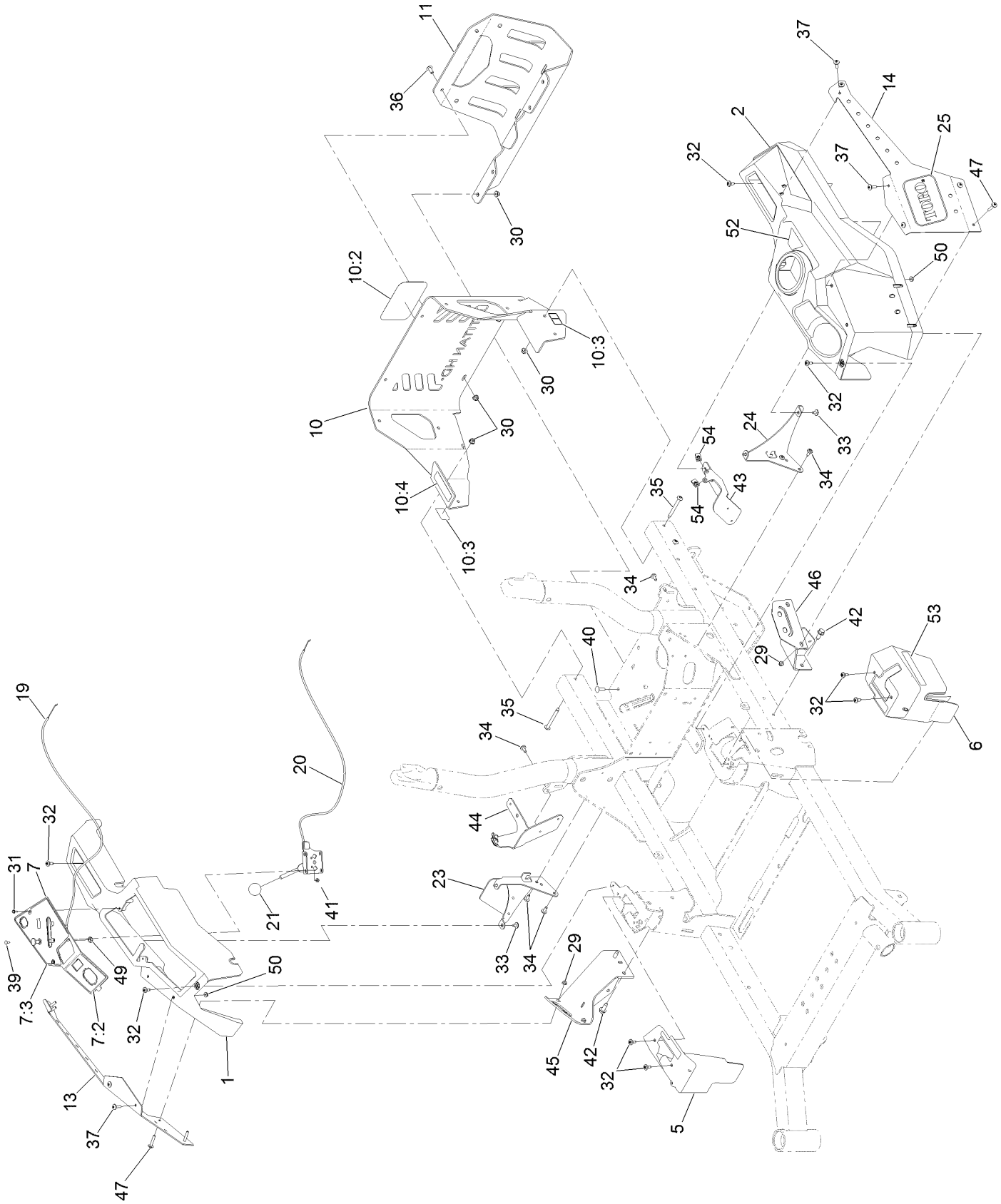

Control Console and Guard Assembly (continued)

Ref.	Part Number	Qty.	Description
1	126-4983	1	Console-RH
2	126-4984	1	Console-LH
5	126-7371	1	Cover-Control, Motion (RH)
6	126-7372	1	Cover-Control, Motion (LH)
7	136-1673	1	Control Panel ASM
7:2	126-9115	1	Decal-Panel, Control
7:3	136-1305	1	Decal-Panel, Control
10	126-7803	1	Rear Guard ASM
10:2	99-4693	1	Decal
10:3	106-5517	2	Decal-Warning
10:4	117-2718	1	Decal-Arrester, Spark
11	126-7664-03	1	Guard-Muffler
13	136-1745-01	1	Cover-Pod, RH
14	136-1746-01	1	Cover-LH
19	126-7009	1	Cable-Control, Choke
20	126-7008	1	Cable-Control, Throttle
21	1-603175	1	Knob-Ball
23	126-9945	1	Support-Console, RH
24	126-5532-03	1	Bracket-Console, LH
25	68-3640	2	Decal
29	104-7201	4	Nut-HF
30	104-8300	8	Nut-HF, NI

Ref.	Part Number	Qty.	Description
31	117-5036	2	Screw-Plastic, HWH
32	120-7950	8	Screw
33	126-5544	4	Screw-Torx
34	126-6266	8	Screw-Torx
35	126-6267	4	Screw-Torx
36	126-6268	2	Screw-Torx
37	126-6269	8	Screw-Truss
39	1-807513	4	Bolt-CARR
40	3230-22	2	Screw-CARR
41	3296-2	2	Nut-Lock, NI
42	126-1696	4	Screw-Forming, Thread
43	126-9808-03	1	Bracket-Support, Left Pod
44	126-9809-03	1	Bracket-Support, Right Pod
45	126-9104-01	1	Support-Pod, RH
46	126-9105-01	1	Support-Pod, LH
47	126-8232	4	Screw-Truss
49	3220-3	1	Nut-HJ
50	32149-2	4	Nut-Keps
52	126-9939	1	Decal-Fill, Fuel
53	126-9298	2	Decal
54	126-3739	4	Nut-Retainer

Fuel Tank and Vent Hose Assembly

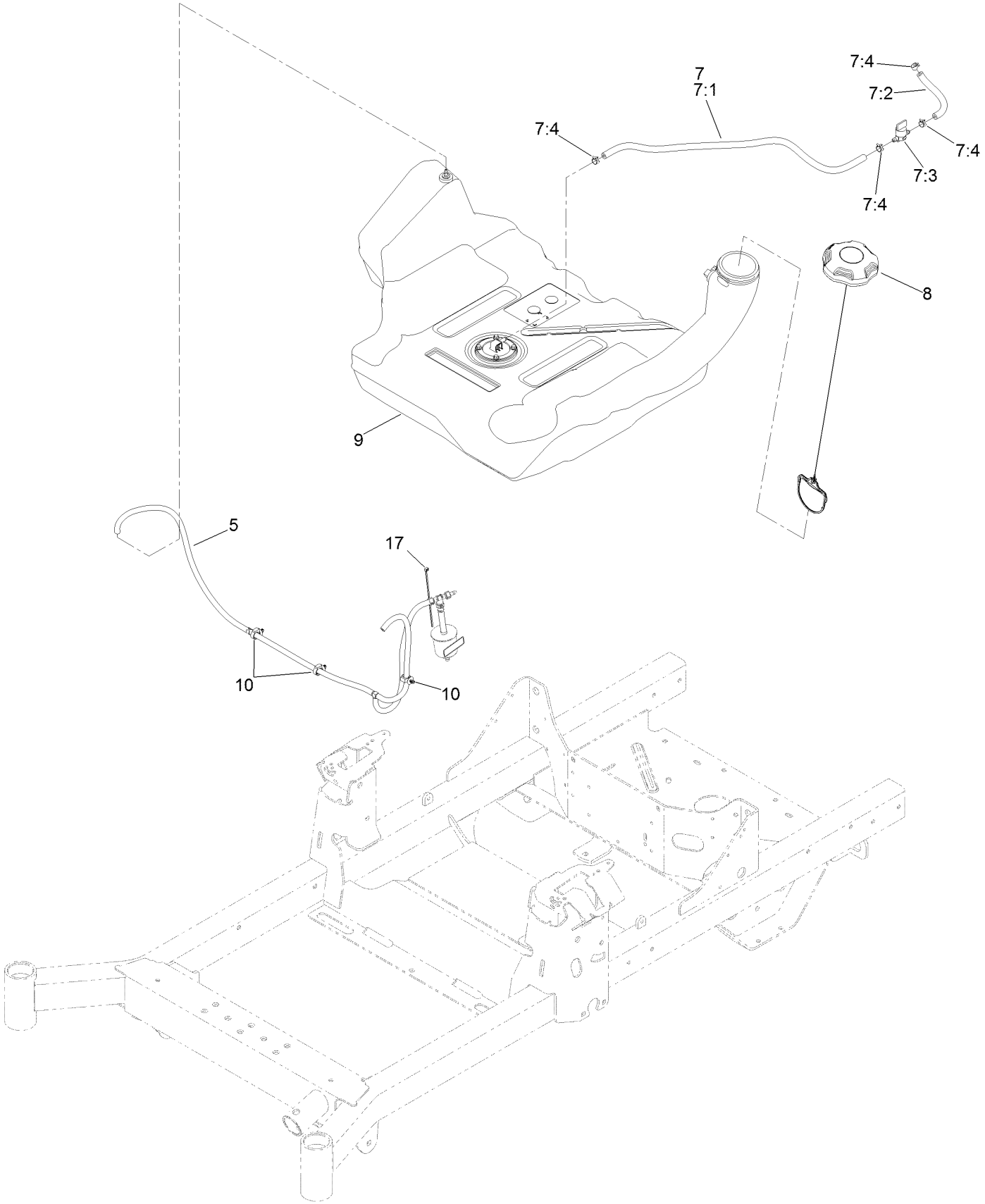

Fuel Tank and Vent Hose Assembly (continued)

Ref.	Part Number	Qty.	Description
5	126-8738	1	Vent Hose ASM
7	126-8740	1	Fuel Hose ASM
7:1	109-0302	1	Hose-Fuel
7:2	109-0678	1	Hose-Fuel
7:3	1-603770	1	Valve-Fuel
7:4	2412-98	4	Clamp-Hose
8	126-4723	1	Cap-Fuel
9	126-4724	1	Tank-Fuel
10	126-5523	3	Clip
17	1-303287	1	Tie-Cable

Fuel Tank Assembly No. 126-4724

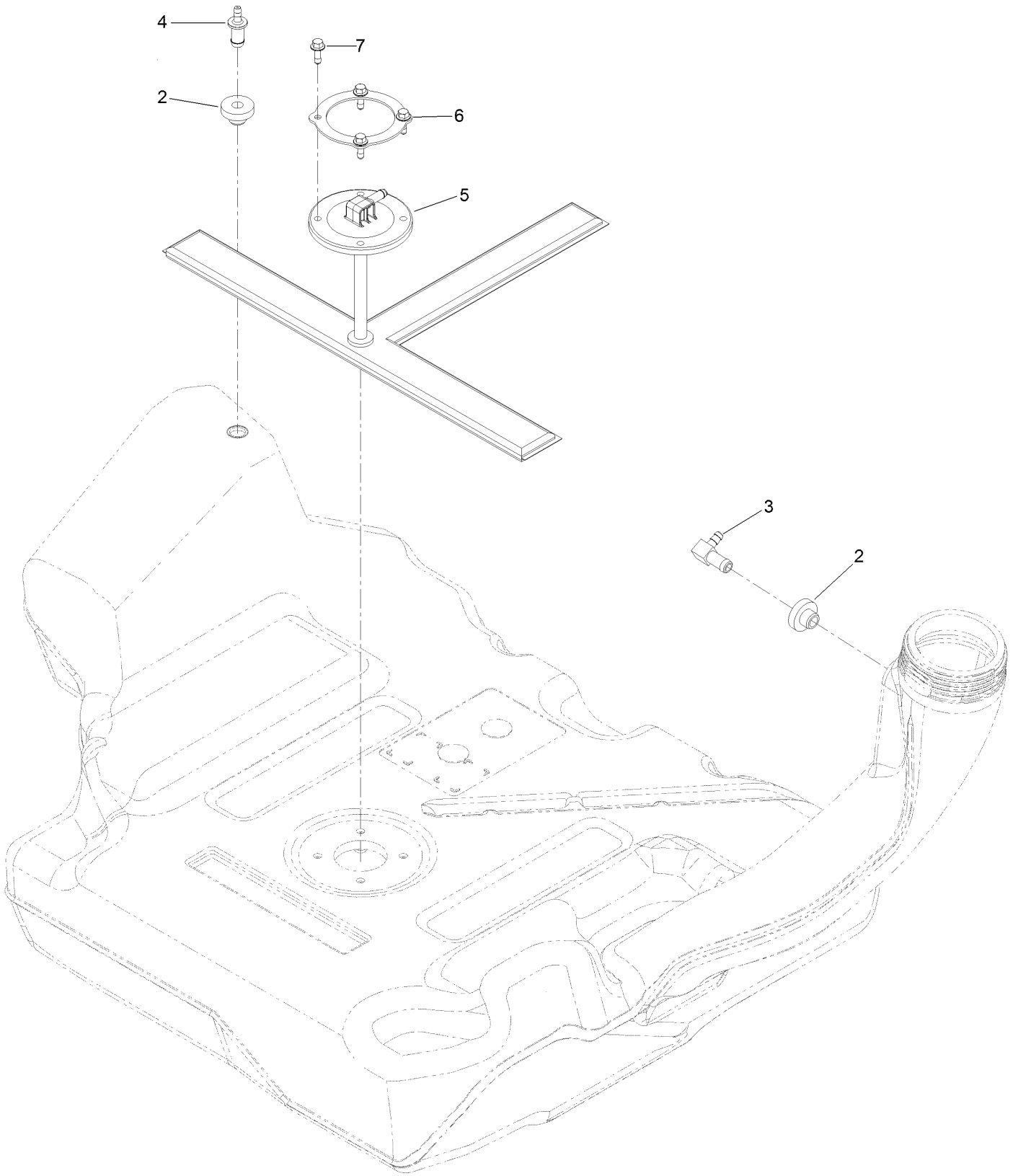

Fuel Tank Assembly No. 126-4724 (continued)

Ref.	Part Number	Qty.	Description
2	46-6560	2	Bushing
3	126-9057	1	Fitting-90 DEG
4	116-4630	1	Fitting-Orifice, Straight
5	126-5528	1	Pickup-Fuel
6	126-5527	1	Ring-Retainer
7	126-5525	4	Bolt

Seat Mount Assembly

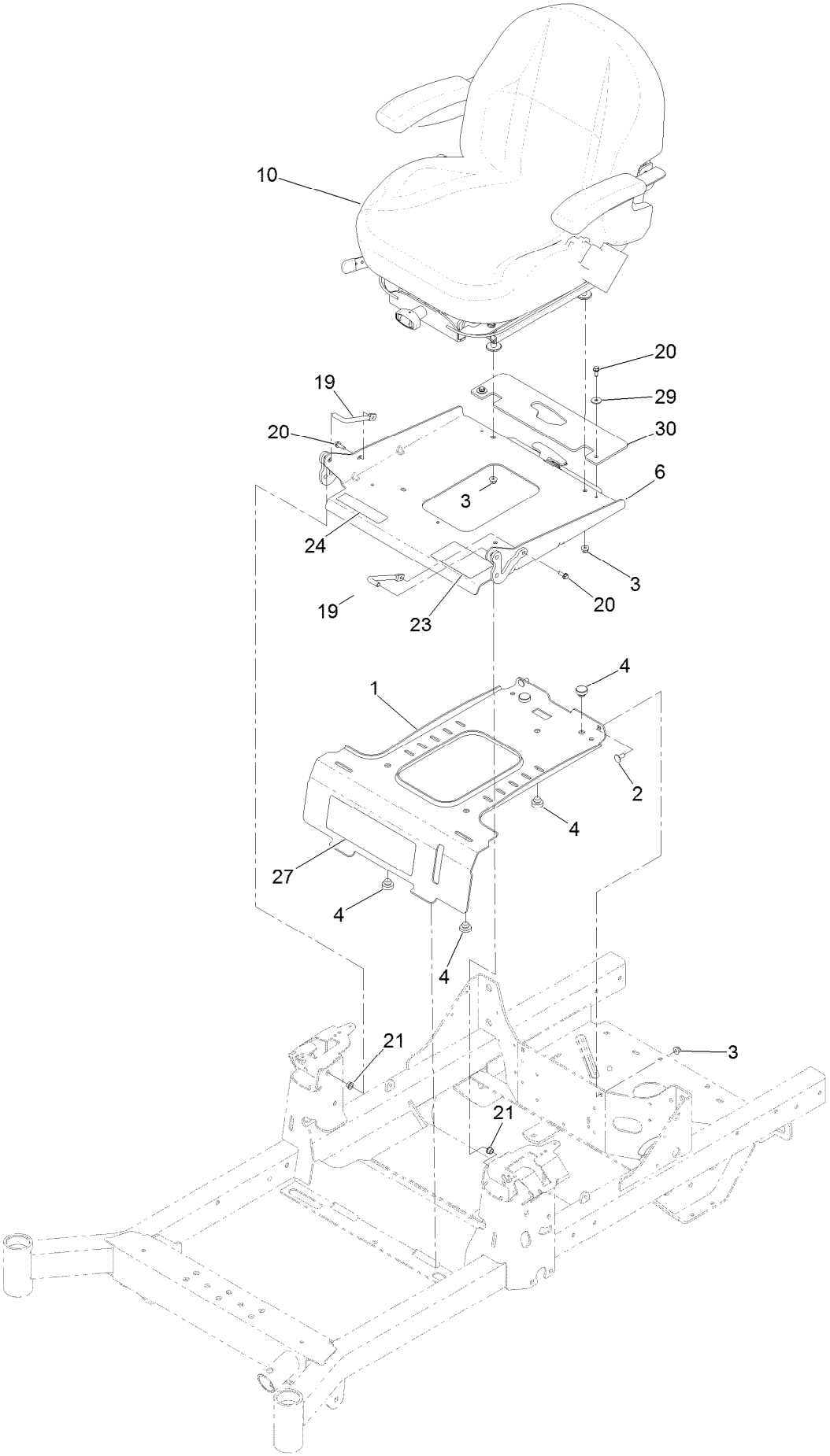

Seat Mount Assembly (continued)

Ref.	Part Number	Qty.	Description
1	126-4082-03	1	Plate-Retainer, Tank
2	3230-23	2	Screw-CARR
3	104-8300	6	Nut-HF, NI
4	104-1412	5	Bumper-Rubber
6	126-7309	1	Seat Pan And Latch ASM
10	130-0801	1	Seat ASM
19	126-5914	2	Pin-Pivot, Seat
20	32144-44	2	Screw-HWH, Thread Roll
21	1-603735	2	Bushing-Flanged
23	126-8151	1	Decal-Aid, Service
24	126-8161	1	Decal-Latch, Seat
27	126-9273	1	Decal
29	3256-67	2	Washer
30	135-0099	1	Guard-Rubber

Seat Latch Assembly

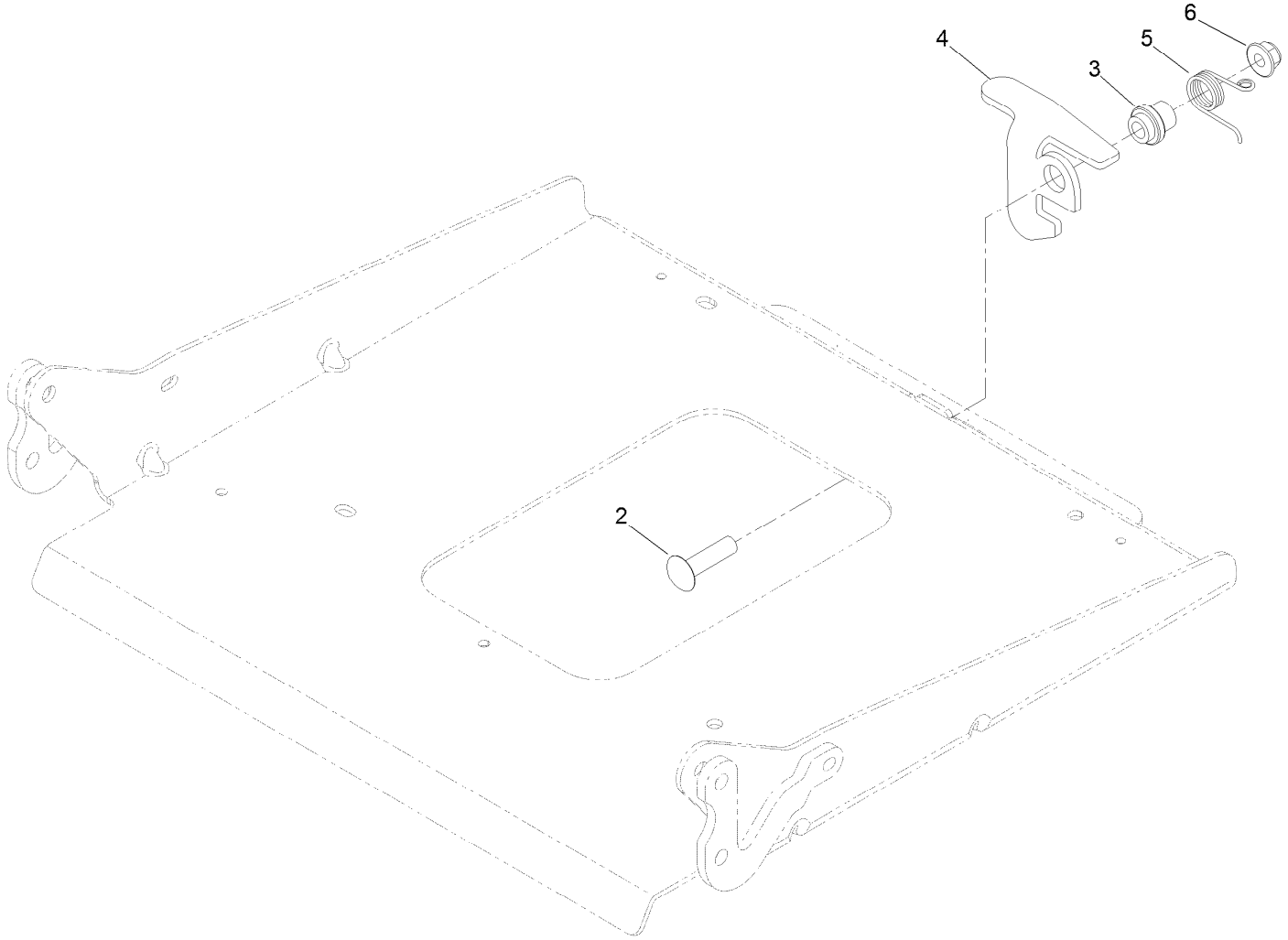

Seat Latch Assembly (continued)

Ref.	Part Number	Qty.	Description
2	3231-26	1	Screw-CARR
3	107-0075	1	Bushing-Latch, Seat
4	126-6739	1	Latch-Catch, Single
5	126-8923	1	Spring-Torsion, Latch
6	104-8301	1	Nut-HF, NI

Seat Assembly No. 130-0801

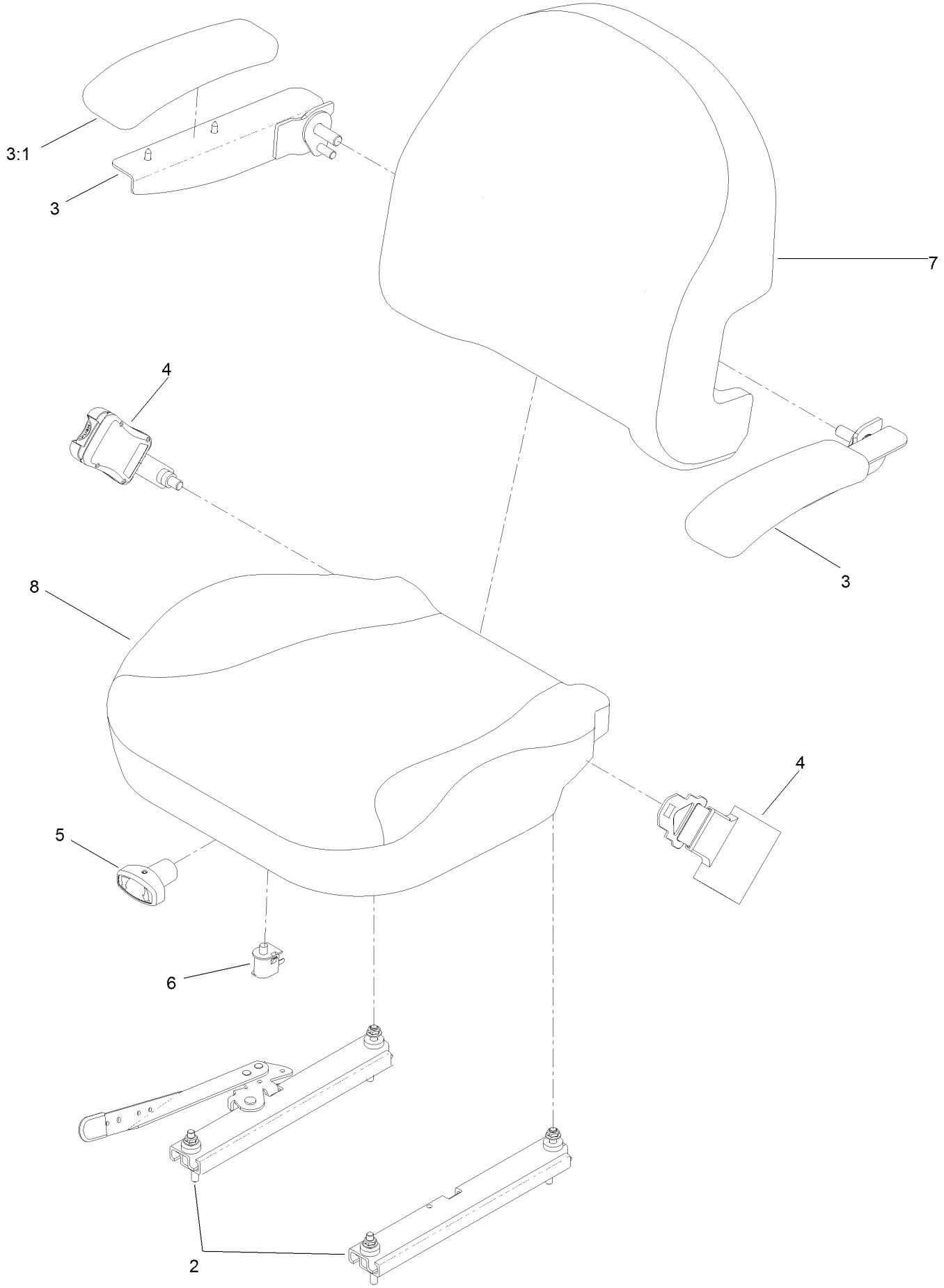

Seat Assembly No. 130-0801 (continued)

Ref.	Part Number	Qty.	Description
2	130-0844	1	Track Set
3	126-2058	1	Armrest Kit
3:1	110-4163	2	Cushion-Rest, Arm
4	130-0845	1	Seat Belt Kit
5	130-0846	1	Knob-Adjuster
6	82-2190	1	Switch-Bail
7	130-0847	1	Cover-Back
8	130-0848	1	Cover-Cushion

Motion Control Assembly

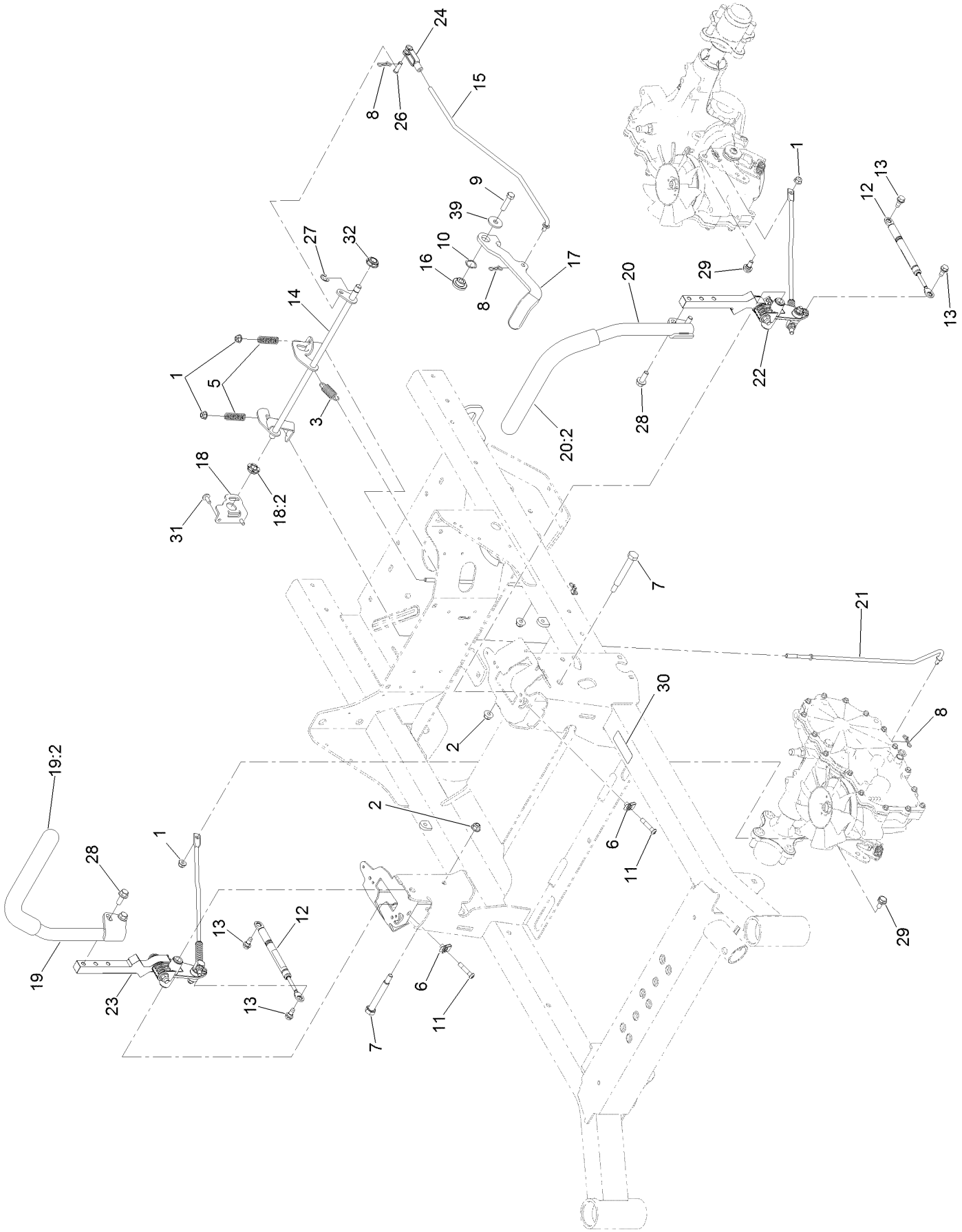

Motion Control Assembly (continued)

Ref.	Part Number	Qty.	Description
1	104-8300	4	Nut-HF, NI
2	104-8301	3	Nut-HF, NI
3	107-1045	2	Spring-Extension
5	109-7694	2	Spring-Compression
6	112-3306	2	Nut
7	115-5099	2	Bolt-Pivot
8	119-1415	4	Pin-Cotter, Locking
9	323-8	1	Screw-HH
10	119-4164	1	Washer-Wave
11	126-4299	2	Screw-HSBH
12	126-4322	2	Damper
13	126-4424	4	Screw-Shoulder
14	126-5813	1	Shaft-Brake
15	126-5819	1	Linkage-Brake, Upper
16	126-5989	1	Pivot-Flange
17	126-9490	1	Lever-Brake (With Grip)
18	126-6456	1	Bracket-Brake
18:2	126-5820	1	Bearing-Spherical
19	126-9191	1	RH Control Handle ASM
19:2	126-7359	1	Grip
20	126-9192	1	LH Control Handle ASM
20:2	126-7359	1	Grip
21	126-7217	2	Linkage-Brake, Lower
22		1	LH Motion Control ASM ●
23		1	RH Motion Control ASM ●
24	1-303105	1	Yoke-Adjustable
26	1-808280	1	Pin-Clevis
27	32120-47	1	Ring-Retaining, External
28	3234-42	4	Screw-HHF
29	37-8771	2	Bolt-Shoulder, HF
30	115-9625	1	Decal-Brake, Parking
31	126-6266	2	Screw-Torx
32	126-5820	1	Bearing-Spherical
39	2844	1	Washer

● Not serviced separately

LH Motion Control Assembly

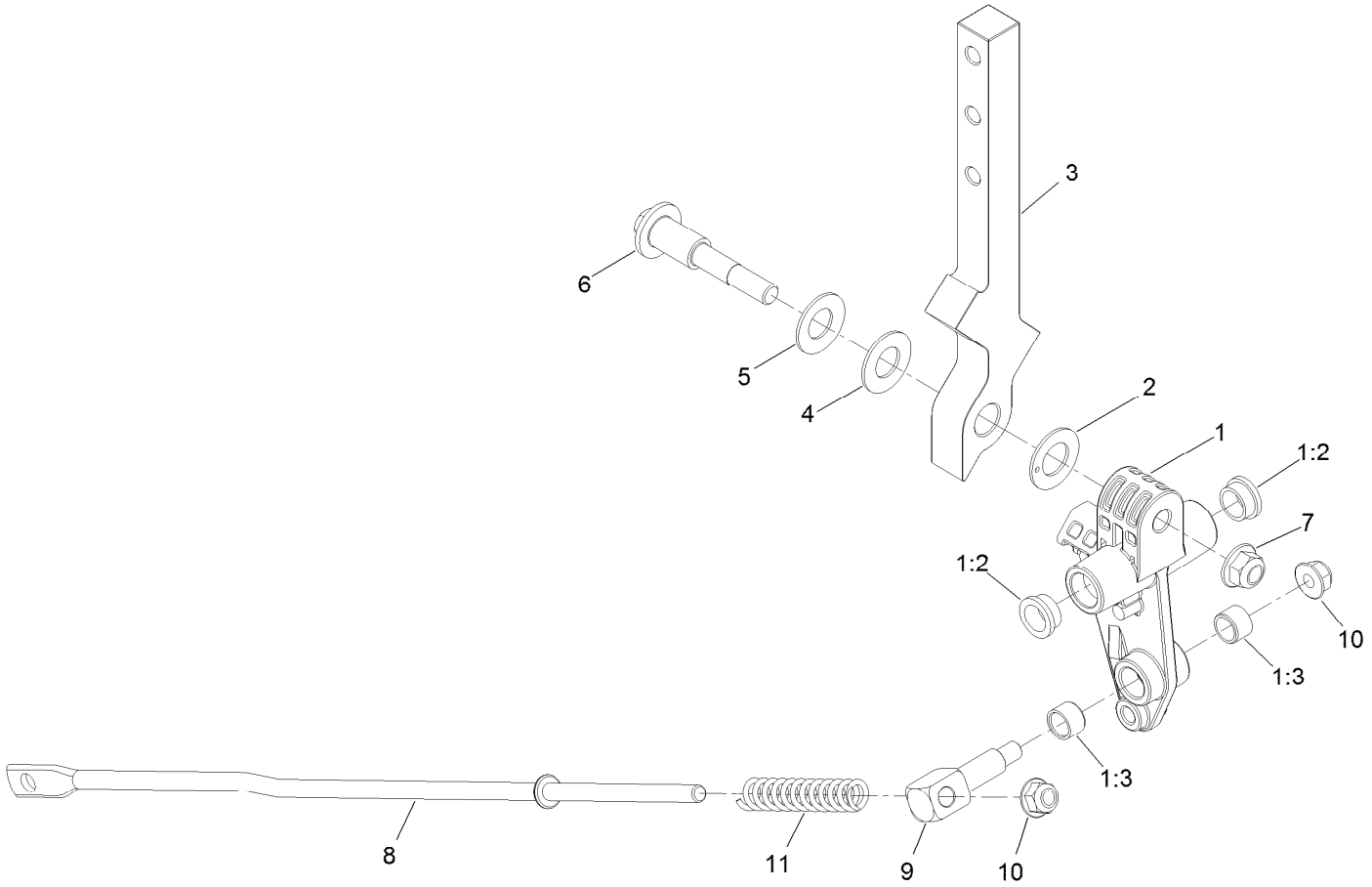

LH Motion Control Assembly (continued)

Ref.	Part Number	Qty.	Description
1	126-3773	1	Control Arm ASM
1:2	126-8909	2	Bushing
1:3	1-413152	2	Bushing-Sleeve
2	126-7296	1	Washer-Friction
3	126-8182	1	Arm-Control
4	117-1240	1	Washer
5	119-8925	1	Washer-Belleville
6	117-1198	1	Bolt-Pivot
7	104-8301	1	Nut-HF, NI
8	126-5435	1	Link-Control
9	126-5434	1	Swivel
10	104-8300	2	Nut-HF, NI
11	126-8195	1	Spring-Return, Neutral

RH Motion Control Assembly

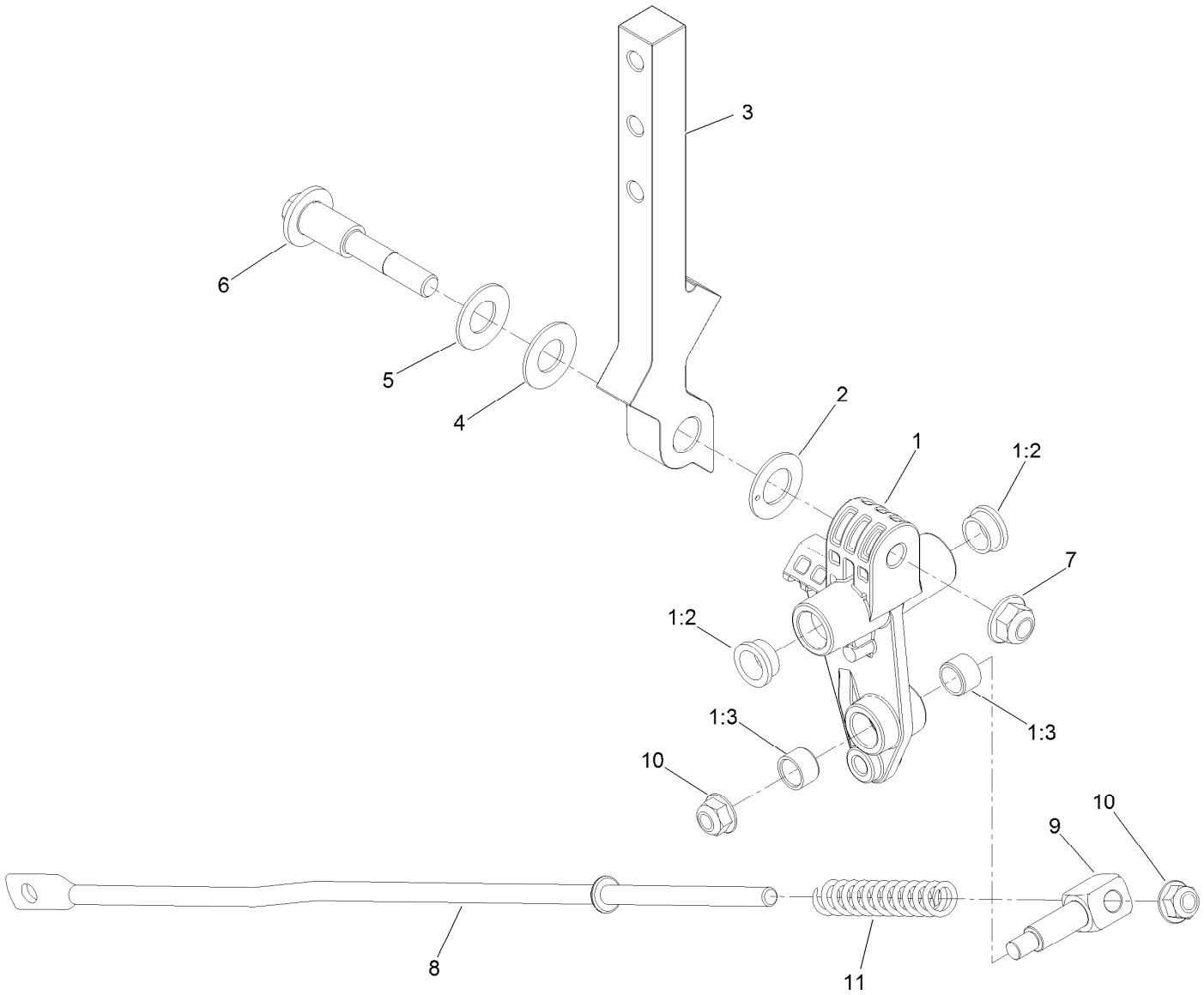

RH Motion Control Assembly (continued)

Ref.	Part Number	Qty.	Description
1	126-3773	1	Control Arm ASM
1:2	126-8909	2	Bushing
1:3	1-413152	2	Bushing-Sleeve
2	126-7296	1	Washer-Friction
3	126-8182	1	Arm-Control
4	117-1240	1	Washer
5	119-8925	1	Washer-Belleville
6	117-1198	1	Bolt-Pivot
7	104-8301	1	Nut-HF, NI
8	126-5435	1	Link-Control
9	126-5434	1	Swivel
10	104-8300	2	Nut-HF, NI
11	126-8195	1	Spring-Return, Neutral

Electrical System Assembly

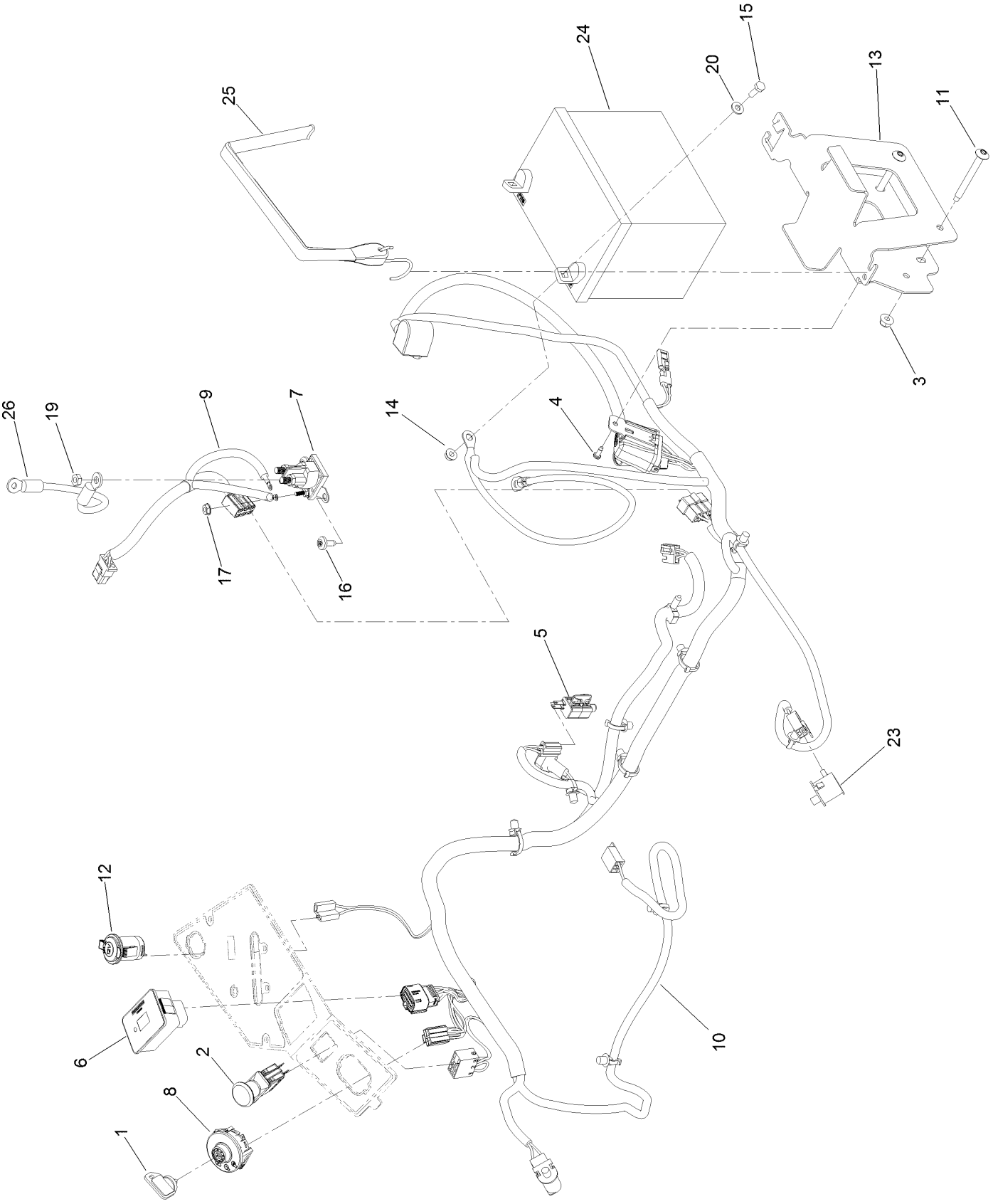

Electrical System Assembly (continued)

Ref.	Part Number	Qty.	Description
1	63-8360	1	Key-Ignition
2	103-5221	1	Switch-PTO
3	104-8300	2	Nut-HF, NI
4	105-6849	1	Screw-Forming, Thread
5	110-6765	1	Switch
6	116-5609	1	Module ASM
7	117-1197	1	Solenoid
8	117-2221	1	Switch-Ignition
9	126-5036	1	Adapter-Harness, Wire
10	126-5803	1	Harness-Wire ▲
11	126-6267	2	Screw-Torx
12	126-6499	1	Port-Power, 12V
13	126-6725-03	1	Tray-Battery
14	32128-33	2	Nut-HF
15	321-4	2	Screw-HH
16	126-6266	2	Screw-Torx
17	32149-8	2	Nut-Keps
19	3220-2	1	Nut-Jam
20	3256-22	2	Washer-Flat
23	82-2190	2	Switch-Bail
24		1	Battery (300 CCA, Wet) ■●
25	126-7627	1	Strap-Bungee
26	100-3540	1	Cable-Battery, Positive

● Obtain Locally ■ Not serviced separately

▲ Use dielectric grease on all unsealed connectors and terminals only. Do not apply in sealed connectors.

Wire Harness Assembly No. 126-5803

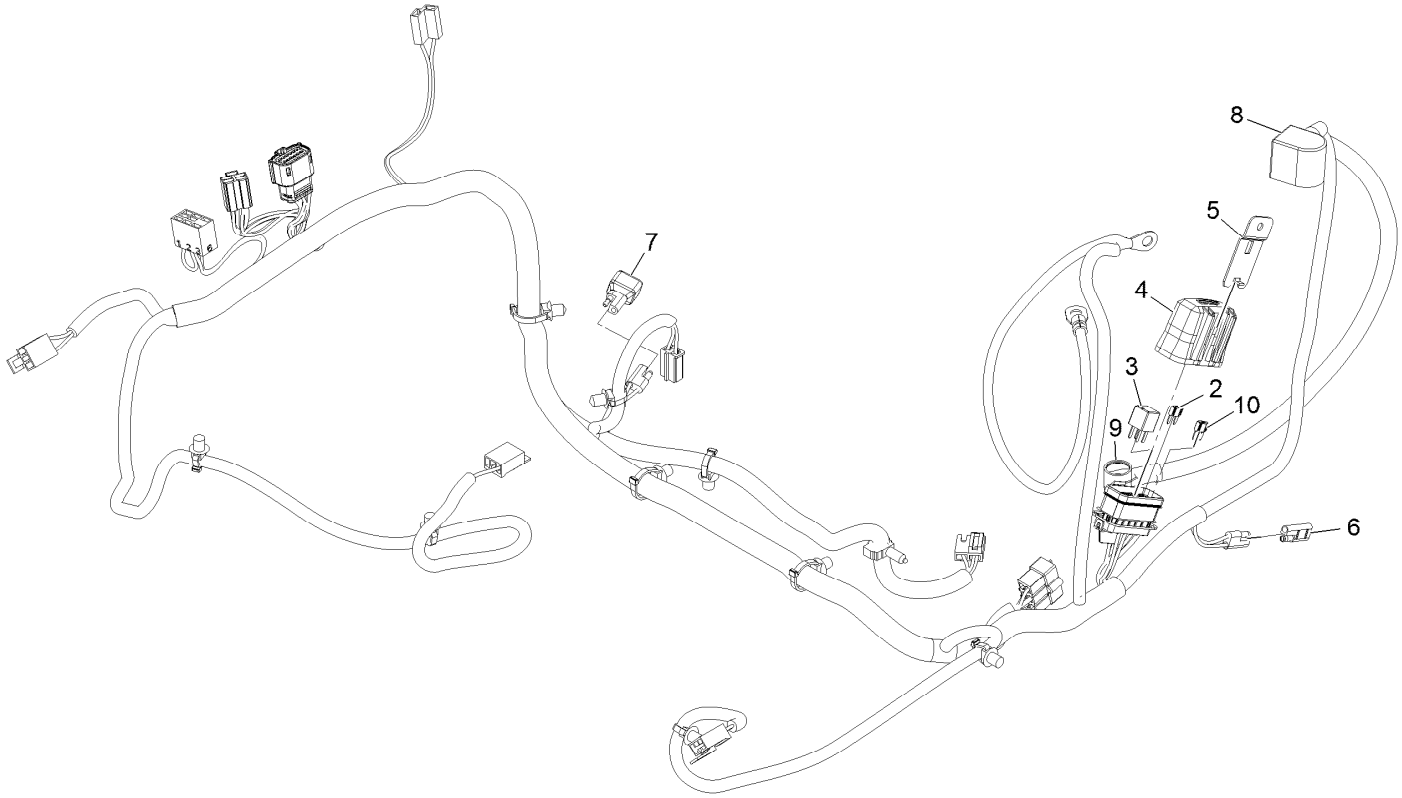

Wire Harness Assembly No. 126-5803 (continued)

Ref.	Part Number	Qty.	Description
2	121-8868	1	Fuse-Mini Blade, 20 Amp
3	126-3991	1	Relay-Micro
4	32180-176	1	Cover-Block, Fuse
5	32180-177	1	Clip-Mounting
6	116-0053	1	Cap-Plug
7	103-3895	1	Diode
8	126-8876	1	Insulator-Battery
9	1-543393	1	Insulator-Solenoid
10	121-8867	1	Fuse-Mini Blade, 15 Amp

Deck Lift Assembly

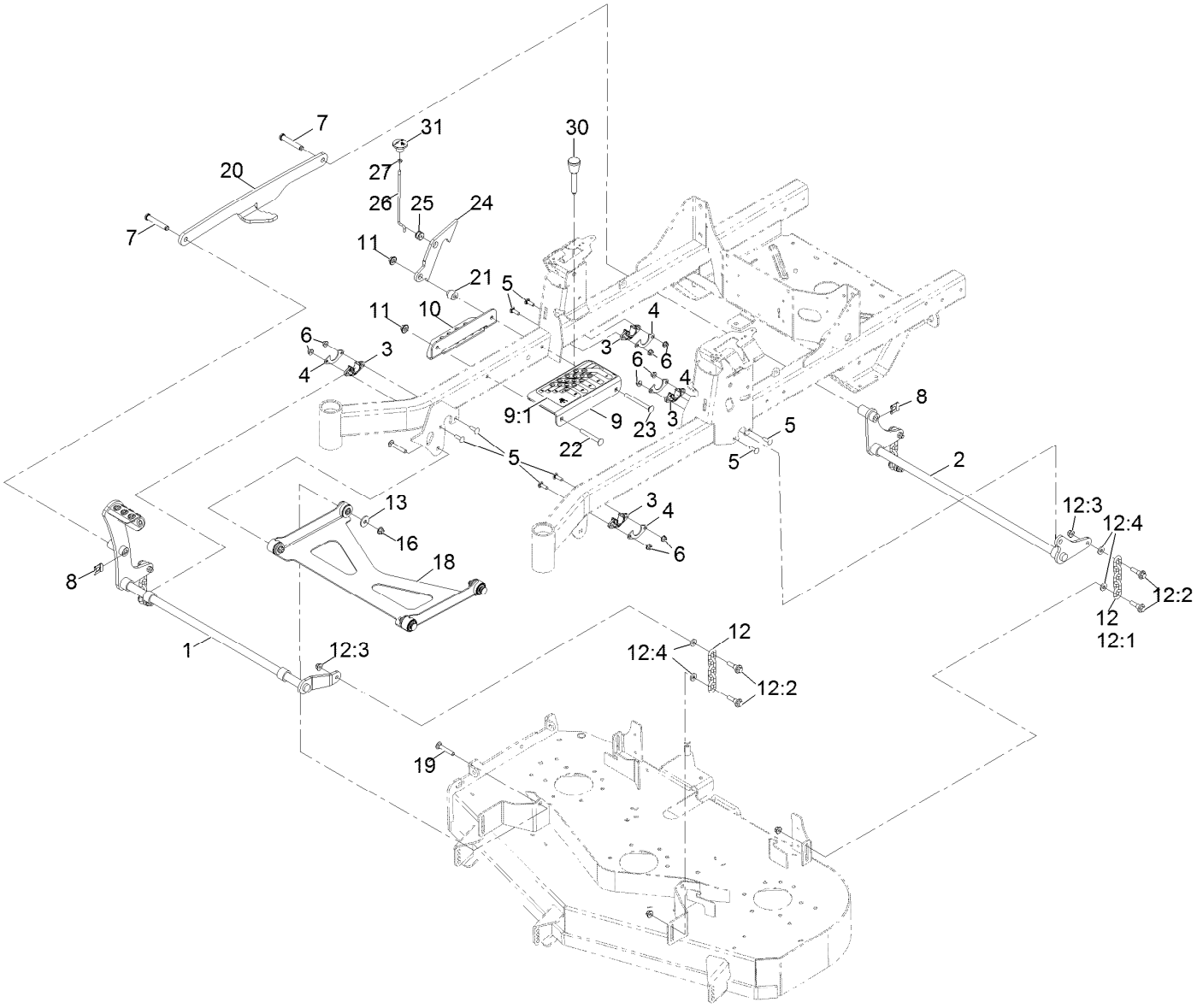

Deck Lift Assembly (continued)

Ref.	Part Number	Qty.	Description
1	126-3342-03	1	Shaft-Lift, Deck
2	126-3343-03	1	Shaft-Lift, Deck (Rear)
3	115-5065	4	Bushing-Flange
4	116-2887	4	Gusset-Lift, Deck
5	3230-22	8	Screw-CARR
6	104-8300	8	Nut-HF, NI
7	126-9181	2	Pin-Clevis
8	95-4064	2	Clip-Pin
9	126-4535	1	Bracket ASM
9:1	126-4784	1	Decal-HOC
10	126-4640-03	1	Angle-HOC, Lower
11	109-6658	2	Nut-Flange, NI
12	126-8877	4	Deck Chain ASM
12:1	1-633447	1	Chain-Lift, Deck
12:2	130-0742	2	Bolt-Shoulder
12:3	104-8301	2	Nut-HF, NI
12:4	43-0940	2	Spacer
13	2844	2	Washer
16	104-8301	2	Nut-HF, NI
18	126-8365	1	Deck Strut ASM
19	3231-7	2	Screw-CARR
20	126-4639-03	1	Link-Lift
21	126-5221	1	Spacer-Stepped
22	3231-42	1	Screw-CARR
23	3231-37	1	Screw-CARR
24	126-5222	1	Plate-Lock, Transport
25	126-5593	1	Grommet
26	126-5223	1	Rod-Lock, Transport
27	3218-1	1	Nut-Jam
30	126-5401	1	Pin-HOC
31	126-7019	1	Knob

Deck Strut Assembly No. 126-8365

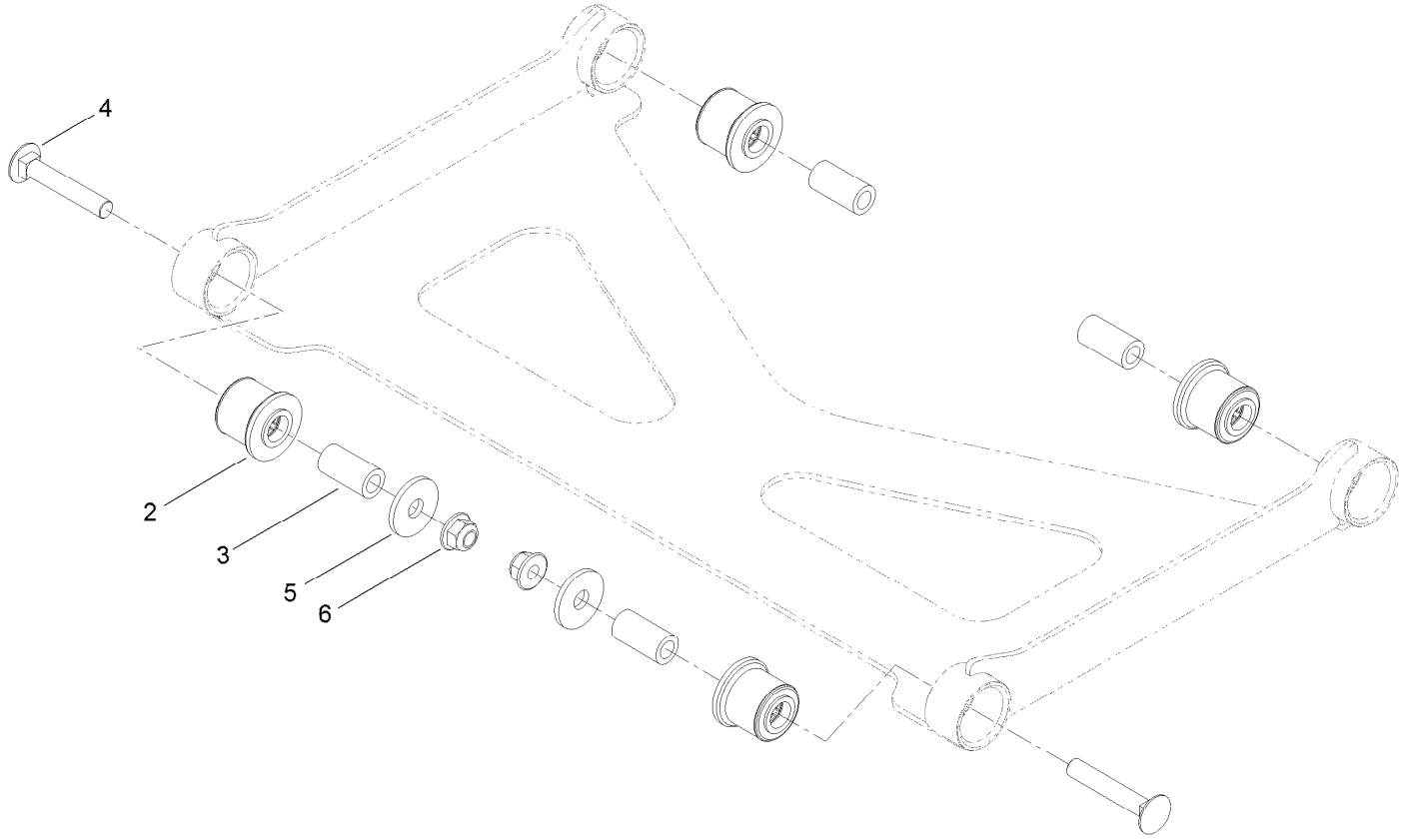

Deck Strut Assembly No. 126-8365 (continued)

Ref.	Part Number	Qty.	Description
2	126-8360	4	Bushing-Rubber, Suspension
3	108-6544	4	Spacer
4	3231-7	2	Screw-CARR
5	2844	2	Washer
6	104-8301	2	Nut-HF, NI

Engine Assembly

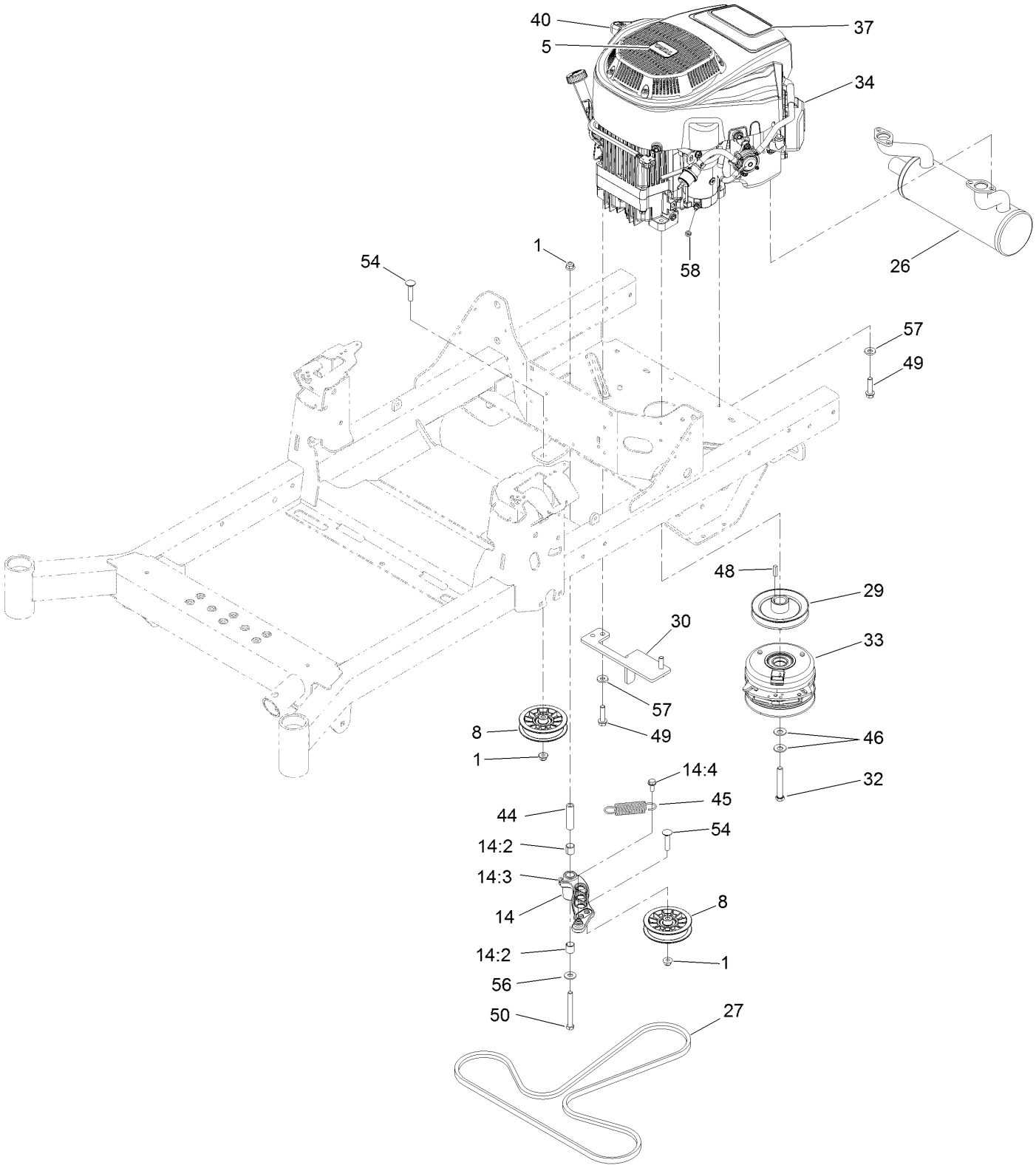

Engine Assembly (continued)

Ref.	Part Number	Qty.	Description
1	104-8301	3	Nut-HF, NI
5	110-1136	1	Decal
8	116-2456	2	Pulley-Flat Idler
14	126-0973	1	Idler Arm ASM
14:2	1-513034	2	Sleeve-Bearing
14:3	302-40	1	Fitting-Grease, 90 DEG
14:4	32144-11	1	Screw-HWH
26	126-5864	1	Muffler
27	126-5993	1	Belt-V
29	135-0134	1	Sheave-Engine
30	126-6687-03	1	Anchor-Clutch
32	126-7198	1	Screw-HH W/Loctite
33	127-3410	1	Clutch-PTO
34	127-9451	1	Engine-2P77F
37	126-9182	1	Decal-HP, Engine
40	131-1097	1	Decal-Drain, Oil
44	1-603384	1	Bushing-Pivot, Idler
45	1-603402	1	Spring-Extension
46	1-603610	2	Washer-Spring
48	1-807259	1	Key
49	32144-102	4	Screw-HWH
50	323-15	1	Screw-HH
54	3231-29	2	Screw-CARR
56	3256-4	1	Washer-Flat
57	98-5975	4	Washer-Belleville
58	33003-00	1	Nut-HF

Deck Assembly

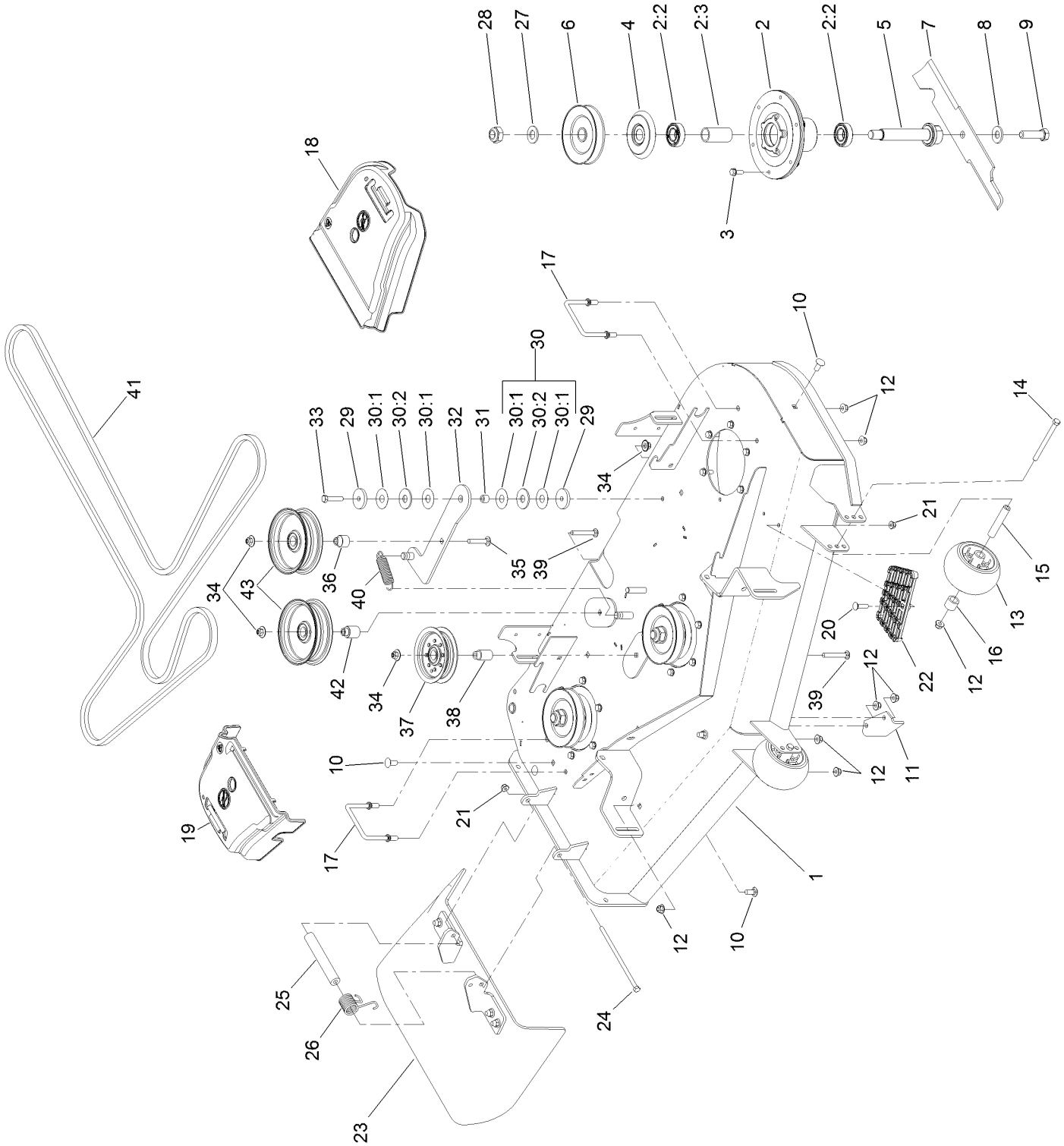

Deck Assembly (continued)

Ref.	Part Number	Qty.	Description
1	126-8956	1	Deck Decal ASM
2	120-5477	3	Spindle ASM
2:2	116-0720	2	Bearing-Ball
2:3	115-2641	1	Spacer-Bearing
3	32144-41	18	Screw-Taptite
4	117-7210	3	Shield-Bearing
5	126-7629	3	Shaft-Spindle
6	117-7326	3	Pulley
7	133-2137	3	Blade-Rotary, 16.5In (Hi Flow)
8	125-1736	3	Washer-Belleville
9	51-4060	3	Screw-Blade
10	3231-27	6	Screw-CARR
11	107-8541-01	1	Baffle-Discharge
12	104-8301	12	Nut-HF, NI
13	1-603299	2	Roller-Scalp, Anti
14	323-23	2	Screw-HH
15	98-7912	2	Tube-Spanner
16	98-7913	2	Tube-Spacer
17	109-6982	2	Wireform-Cover
18	109-6936	1	Cover-Belt, LH
19	109-6935	1	Cover-Belt, RH
20	3230-3	1	Screw-CARR
21	104-8300	2	Nut-HF, NI
22	126-4781-03	1	Step-Deck
23	120-2451	1	Deflector ASM
24	322-50	1	Screw-HH
25	105-4622	1	Spacer
26	108-4052	1	Spring-Torsion
27	92-5836	3	Washer
28	3296-67	3	Nut-Lock, NI
29	110-9981	2	Washer-Plain
30	114-0463	2	Washer-Friction, Composite
30:1	110-9998	2	Washer
30:2	112-3788	1	Spacer
31	1-413088	1	Bushing-Lever, Lift
32	115-5054	1	Arm-Idler
33	323-9	1	Screw-HH
34	109-6658	4	Nut-Flange, NI
35	3231-6	1	Screw-CARR
36	126-7684	1	Bushing-Idler
37	116-3626	1	Pulley-Idler
38	1-413113	1	Bushing-Idler
39	3231-31	2	Screw-CARR
40	139-3616	1	Spring-Extension
41	126-7731	1	Belt, Deck Drive
42	126-7683	1	Bushing-Idler
43	116-4669	2	Idler-Pulley, Flat

Deck Decal Assembly No. 126-8956

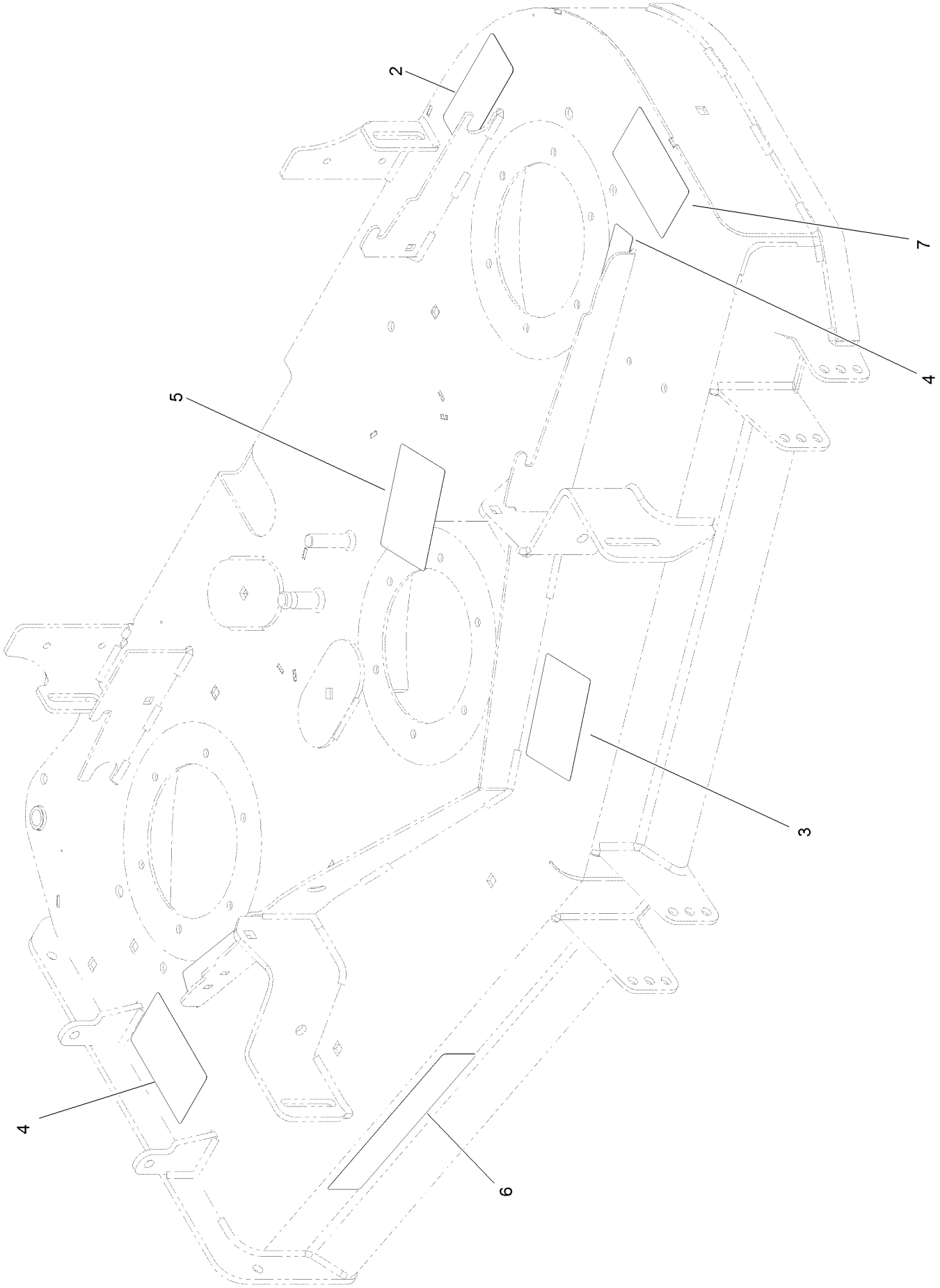

Deck Decal Assembly No. 126-8956 (continued)

Ref.	Part Number	Qty.	Description
2	93-7818	1	Decal-Torque, Blade Bolt
3	112-3858	1	Decal-Scalp, Anti
4	112-9028	2	Decal-Cover, Missing
5	117-1194	1	Decal-Routing, Belt
6	121-3204	1	Decal
7	117-3848	2	Decal-Danger

Deflector Assembly No. 120-2451

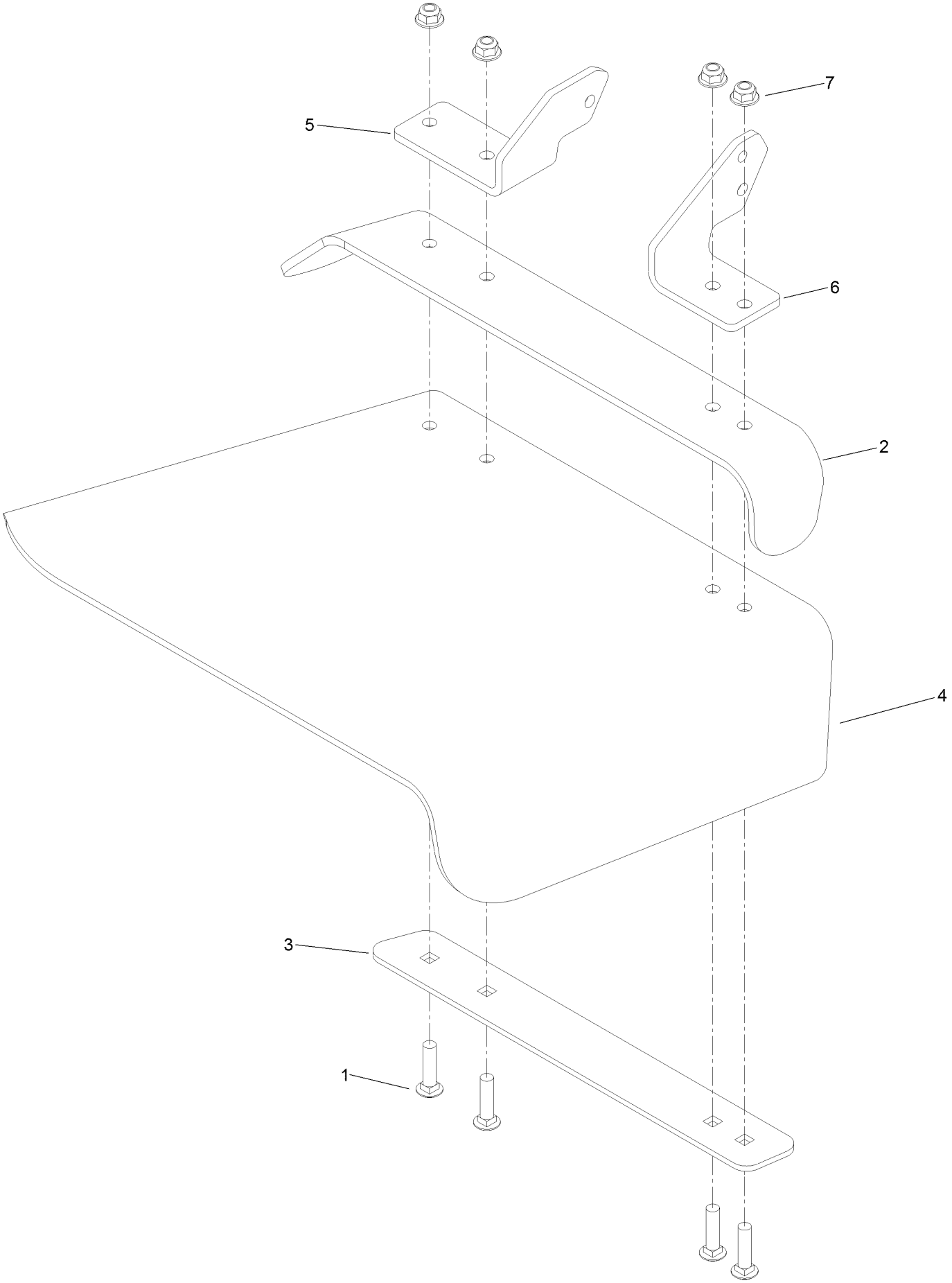

Deflector Assembly No. 120-2451 (continued)

Ref.	Part Number	Qty.	Description
1	3231-4	4	Screw-CARR
2	106-3246-01	1	Deflector
3	106-3248-03	1	Strap-Discharge
4	110-0759	1	Deflector-Rubber
5	108-4059-01	1	Plate-Hinge, Rear
6	106-3253-01	1	Plate-Hinge, Front
7	104-8301	4	Nut-HF, NI

Fuel System Assembly with Non-Canister Style Air Filter

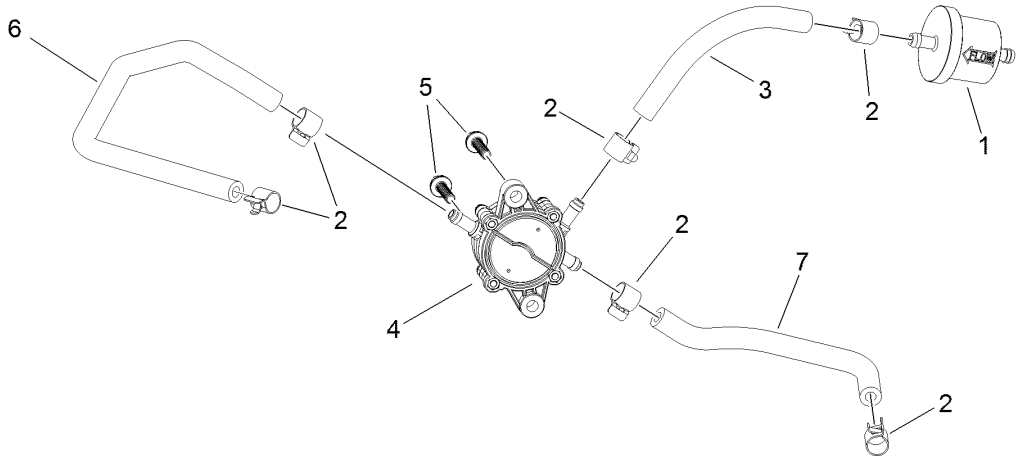

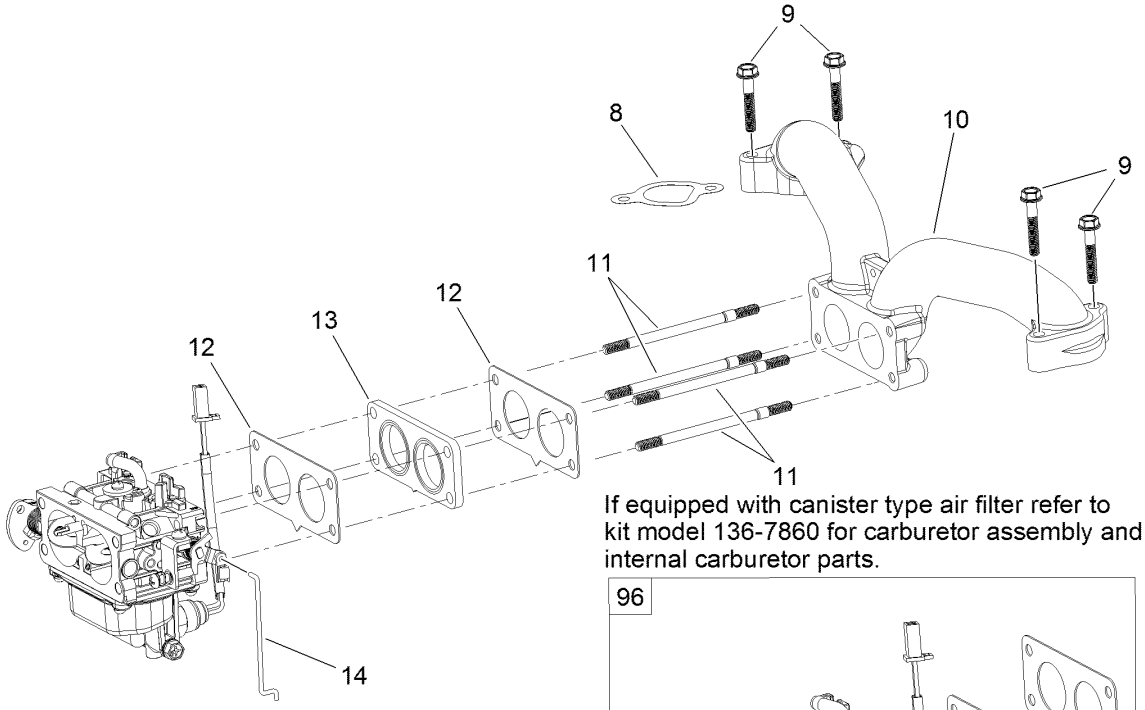

If equipped with canister type air filter refer to kit model 136-7860 for carburetor assembly and internal carburetor parts.

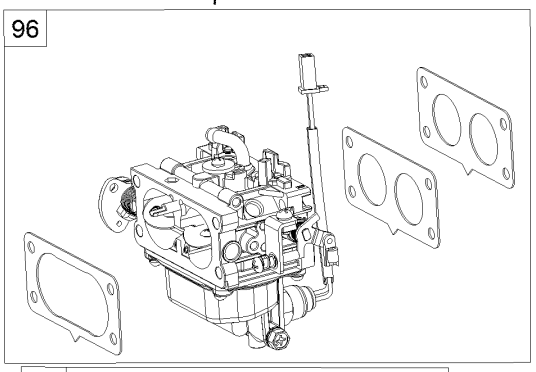

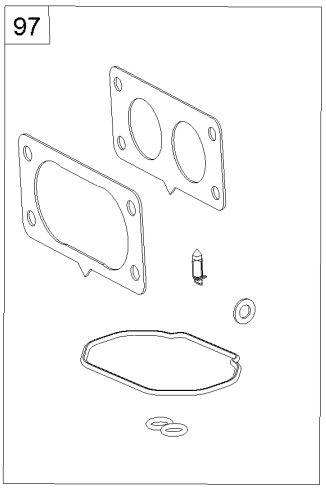

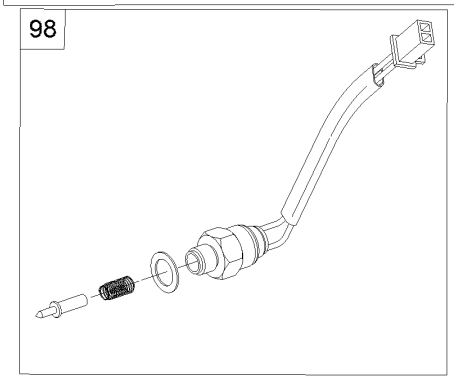

Fuel System Assembly with Non-Canister Style Air Filter (continued)

Ref.	Part Number	Qty.	Description
1	133-1563	1	Filter-Fuel
2	120-4251	6	Clamp-Fuel Line
3	120-4371	1	Line-Fuel
4	127-9206	1	Pump-Fuel
5	120-4225	2	Screw-HHF
6	127-9205	1	Hose-Fuel
7	127-9207	1	Hose-Fuel
8	127-9230	2	Gasket-Intake
9	120-4284	4	Screw-HHF
10	127-9244	1	Manifold-Intake
11	127-9245	4	Stud
12	127-9246	2	Gasket-Carburetor
13	127-9247	1	Insulator-Carburetor
14	127-9248	1	Linkage-Throttle
96	133-9808	1	Carburetor Replacement Kit
97	127-9290	1	Carburetor Repair Kit
98	127-9292	1	Solenoid Kit
99	133-9833	1	High Altitude Kit ●

● Not illustrated

Carburetor Assembly with Non-Canister Style Air Filter

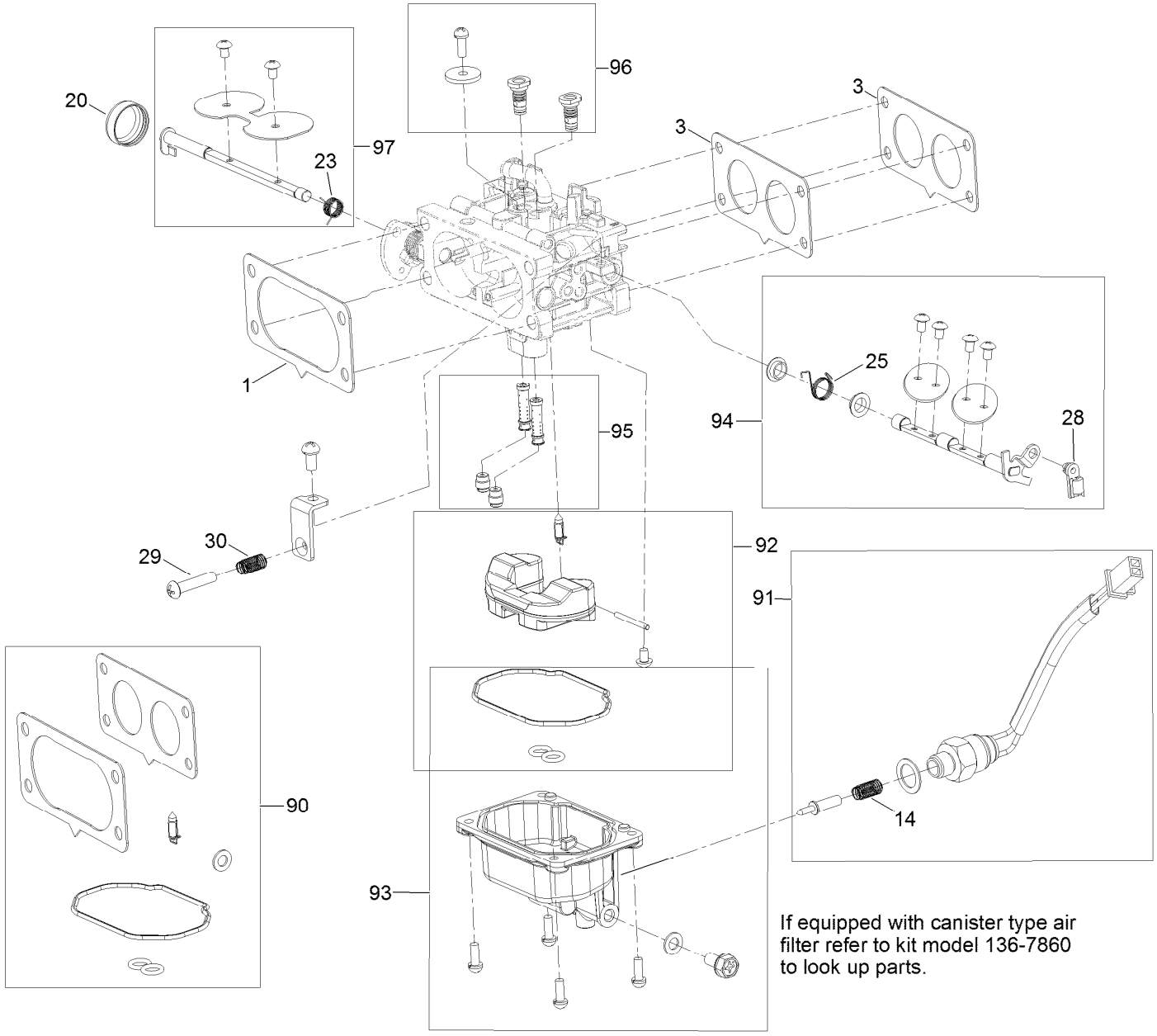

If equipped with canister type air filter refer to kit model 136-7860 to look up parts.

Carburetor Assembly with Non-Canister Style Air Filter (continued)

Ref.	Part Number	Qty.	Description
1	127-9251	1	Gasket-Carburetor
3	127-9246	2	Gasket-Carburetor
14	127-9319	1	Spring
20	127-9325	1	Cover-Shaft, Choke
23	127-9328	1	Spring
25	127-9330	1	Spring
28	127-9333	1	Clamp-Lock
29	127-9334	1	Screw-PPH
30	127-9335	1	Spring

Ref.	Part Number	Qty.	Description
90	127-9290	1	Carburetor Repair Kit
91	127-9292	1	Solenoid Kit
92	127-9340	1	Float Kit
93	127-9341	1	Bowl Kit
94	133-9817	1	Throttle Shaft Kit
95	133-9818	1	Nozzle And Jet Kit
96	133-9812	1	Air Jet Kit
97	127-9345	1	Choke Shaft Kit

Air Intake and Filtration Assembly with Non-Canister Style Air Filter

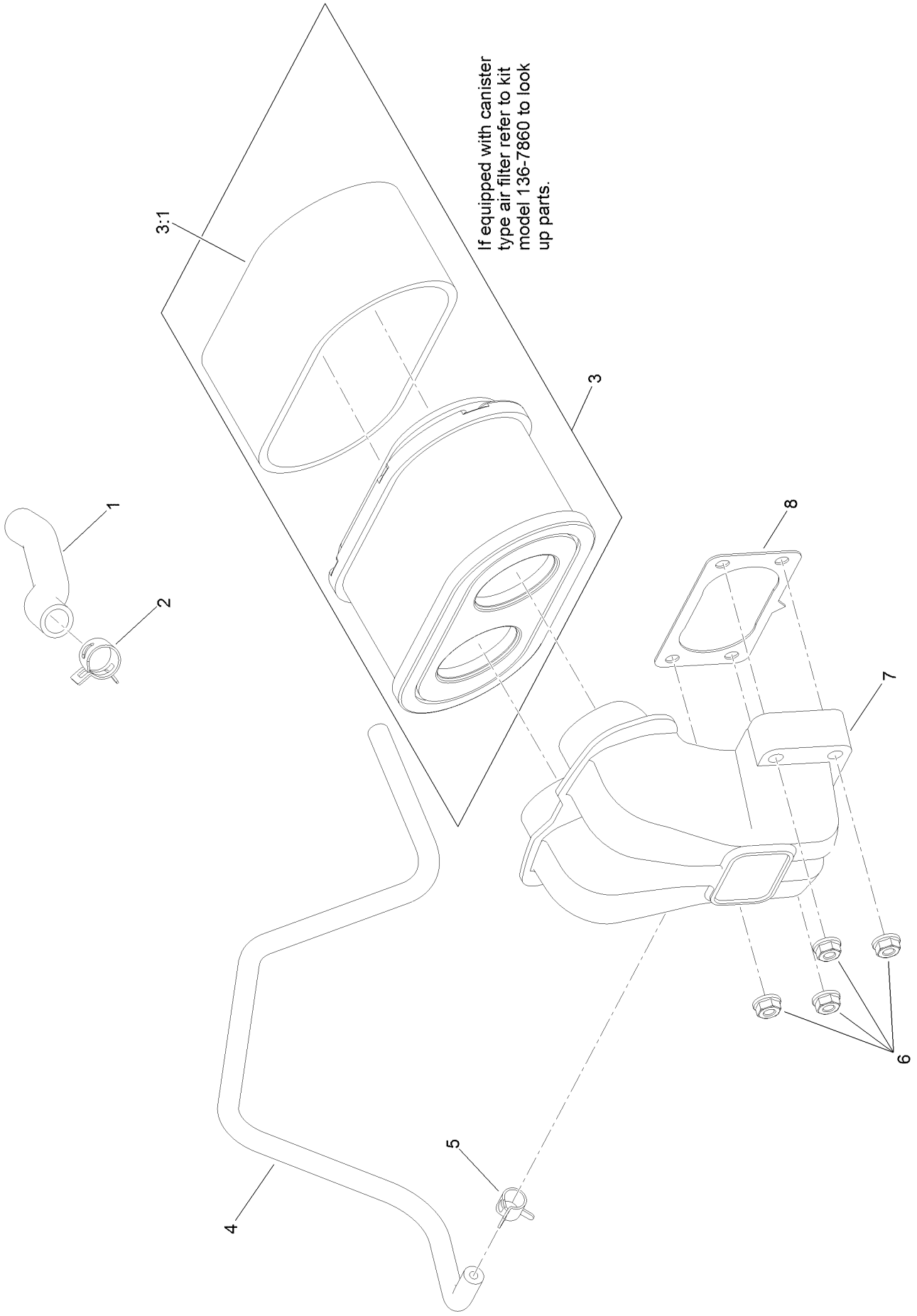

Air Intake and Filtration Assembly with Non-Canister Style Air Filter (continued)

Ref.	Part Number	Qty.	Description
1	127-9235	1	Tube-Breather
2	127-9234	2	Clamp-Hose
3	127-9252	1	Filter-Air, Complete
3:1	127-9288	1	Filter-Pre, Foam
4	127-9253	1	Hose-Fuel
5	127-9187	1	Clamp-Hose
6	120-4236	4	Nut-Flange
7	127-9047	1	Manifold-Filter, Air
8	127-9251	1	Gasket-Carburetor

Ignition and Electrical Assembly

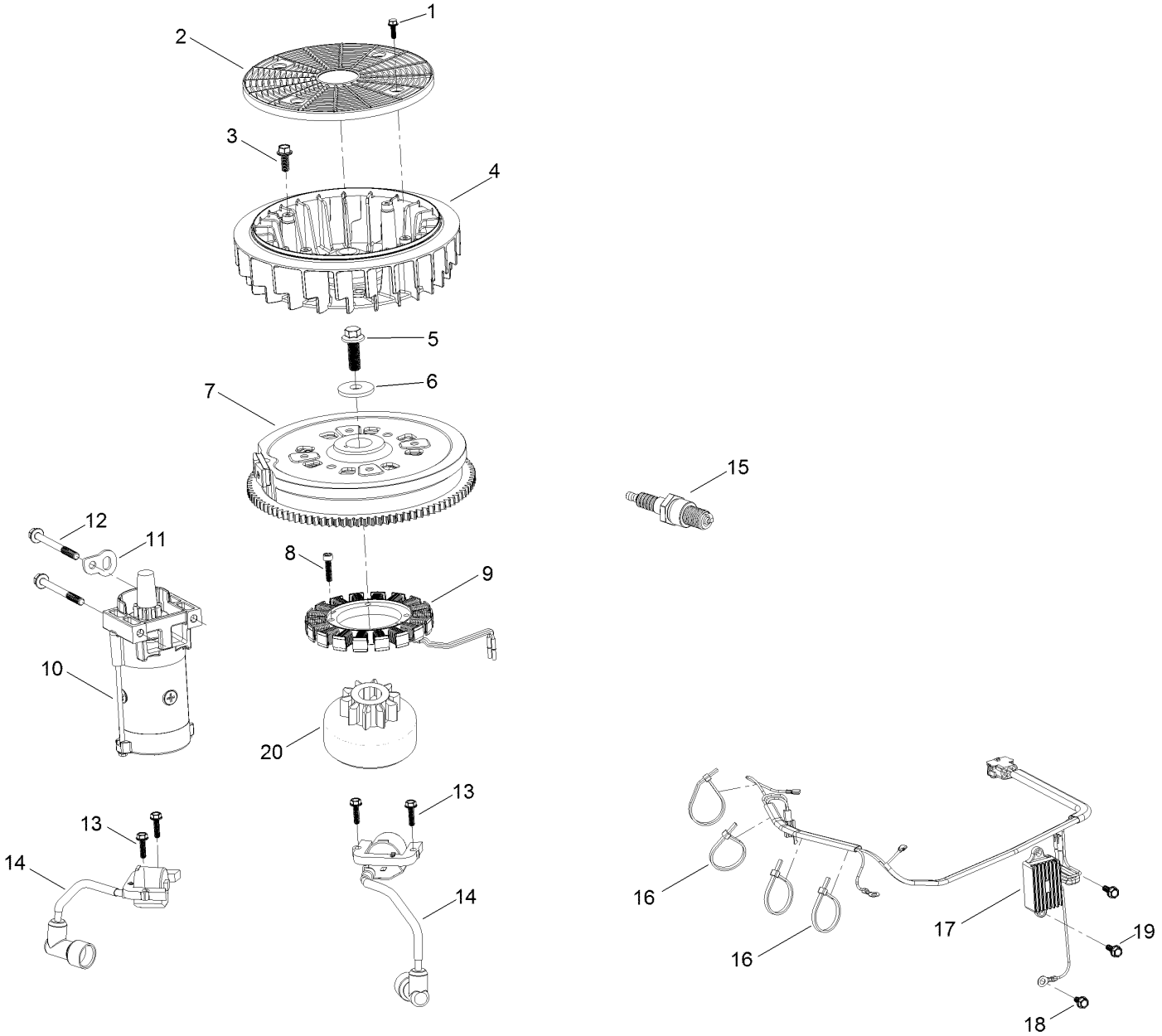

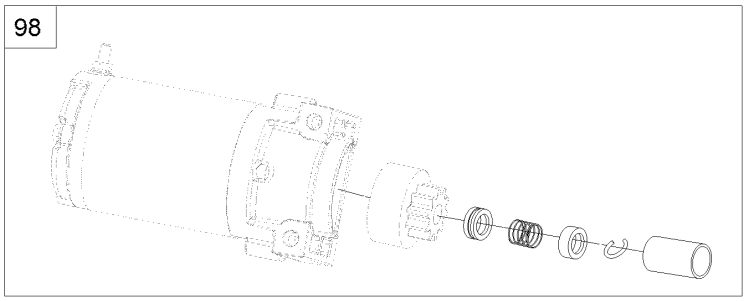

Ignition and Electrical Assembly (continued)

Ref.	Part Number	Qty.	Description
1	127-9197	4	Screw-HWH
2	127-9198	1	Screen-Rotating
3	127-9199	4	Screw-HWH
4	127-9200	1	Fan-Cooling
5	127-9201	1	Screw-HWH
6	127-9202	1	Washer-Spring
7	127-9306	1	Flywheel
8	127-9210	4	Screw-HSH
9	127-9211	1	Alternator
10	133-9828	1	Motor-Starter
11	127-9208	1	Bracket-Lift
12	120-4231	2	Screw-HHF
13	121-0007	4	Bolt-Flange
14	127-9216	2	Ignition Coil ASM
15	81-3250	2	Spark Plug
16	127-9220	4	Tie-Zip
17	127-9219	1	Regulator-Voltage W/Harness
18	120-4216	1	Screw-HHF
19	120-4232	2	Screw-HHF
20	133-1562	1	Pinion-Starter
98	133-1566	1	Starter Repair Kit

Crankcase and Crankshaft Assembly

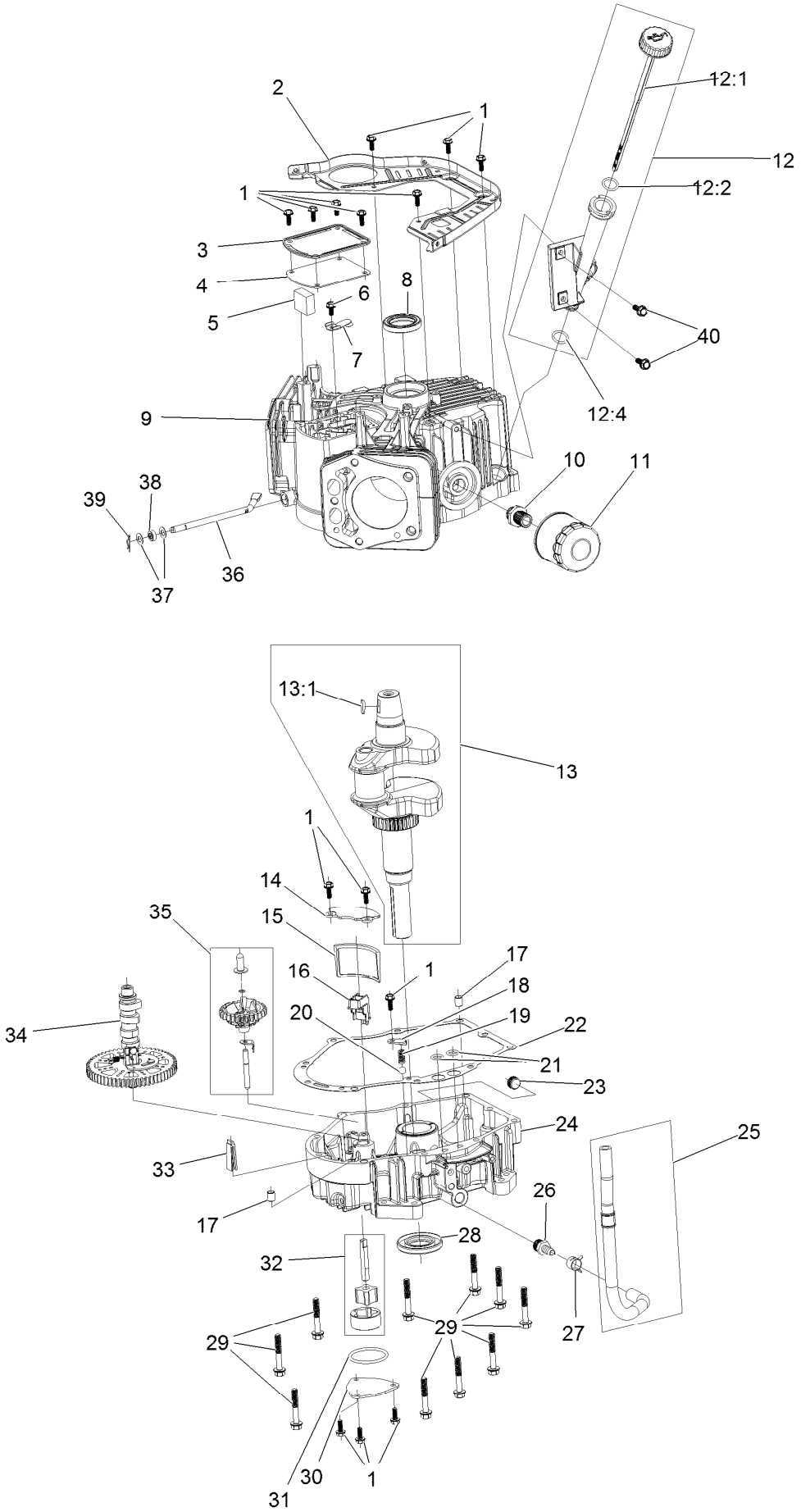

Crankcase and Crankshaft Assembly (continued)

Ref.	Part Number	Qty.	Description
1	120-4232	14	Screw-HHF
2	127-9212	1	Baffle
3	127-9213	1	Cover-Breather
4	127-9214	1	Gasket-Breather
5	127-9215	1	Filter-Breather
6	120-4216	1	Screw-HHF
7	127-9217	1	Valve-Breather
8	120-4267	1	Seal-Oil
9	127-9223	1	Crankcase
10	120-4346	1	Adaptor-Filter, Oil
11	120-4276	1	Filter-Oil
12	127-9218	1	Oil Tube ASM
12:1	127-9283	1	Dipstick
12:2	127-9284	1	O-Ring
12:4	127-9286	1	O-Ring
13	127-9255	1	Crankshaft
13:1	120-4320	1	Key-Woodruff
14	127-9261	1	Cover-Screen, Oil
15	127-9262	1	Screen-Oil
16	127-9263	1	Retainer-Screen
17	120-4274	2	Pin-Dowel
18	127-9264	1	Plate-Retainer
19	127-9265	1	Spring
20	127-9266	1	Valve-Ball
21	120-4262	2	O-Ring
22	127-9267	1	Gasket-Cover, Crankcase
23	133-9805	1	Plug-Drain
24	133-9806	1	Cover-Crankcase
25	127-9293	1	Oil Drain Hose ASM
26	127-9275	1	Fitting-Hose
27	127-9276	1	Clamp-Hose
28	127-9271	1	Seal
29	121-0473	10	Screw-HHF
30	127-9274	1	Cover-Oil Pump
31	127-9273	1	O-Ring
32	127-9272	1	Oil Pump ASM
33	120-4275	1	Deflector-Oil, Rubber
34	133-1568	1	Camshaft
35	133-9807	1	Governor ASM
36	127-9238	1	Shaft-Governor
37	120-4258	2	Washer-Plain
38	120-4257	1	Seal-Oil
39	120-4256	1	Pin-Hair
40	120-4232	2	Screw-HHF

Governor Control Assembly

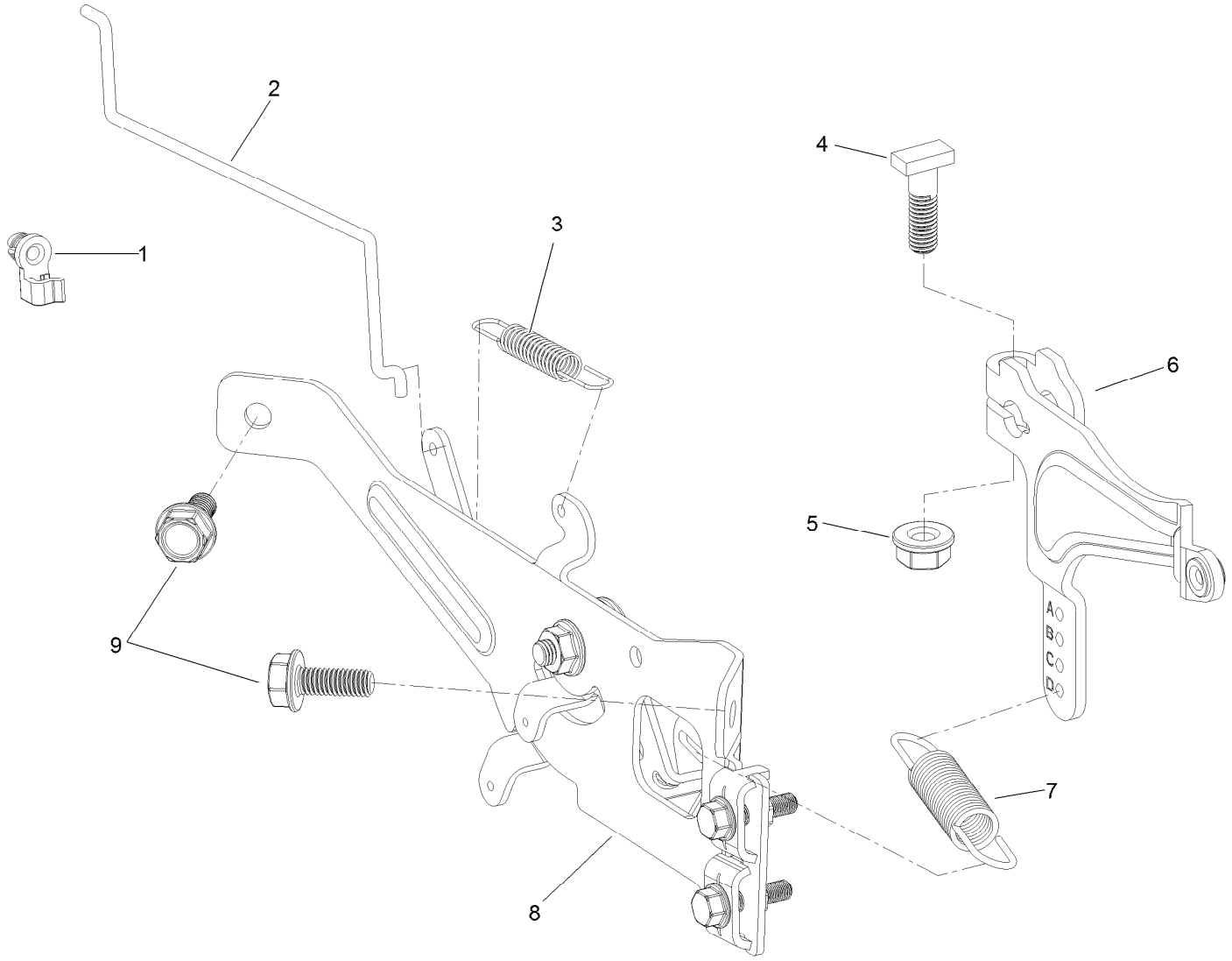

Governor Control Assembly (continued)

Ref.	Part Number	Qty.	Description
1	127-9250	1	Clip-Linkage
2	127-9242	1	Linkage-Choke
3	127-9241	1	Spring-Governor
4	120-4238	1	Bolt-Arm, Governor
5	120-4236	1	Nut-Flange
6	127-9239	1	Arm-Governor
7	133-9809	1	Spring-Governor
8	133-1570	1	Control Plate ASM
9	120-4232	2	Screw-HHF

Piston and Cylinder Head Assembly

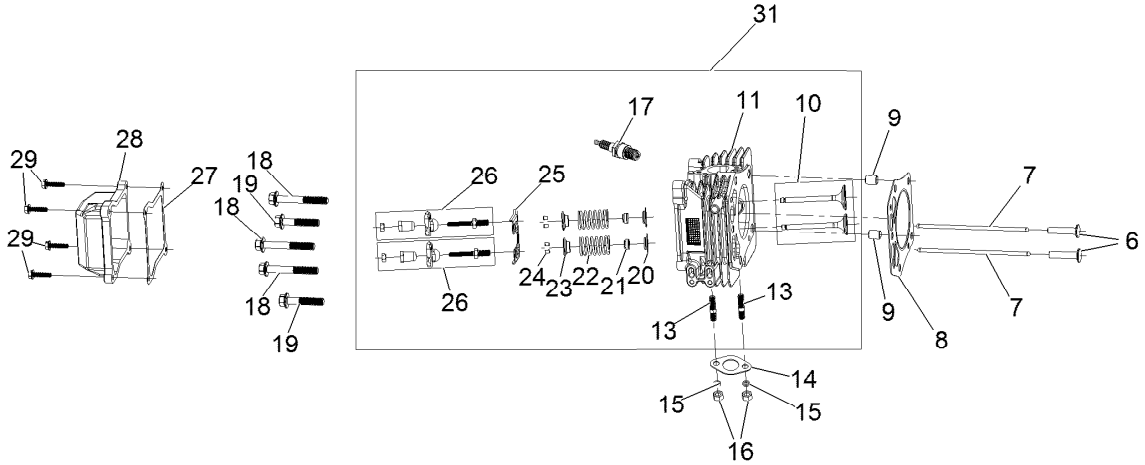

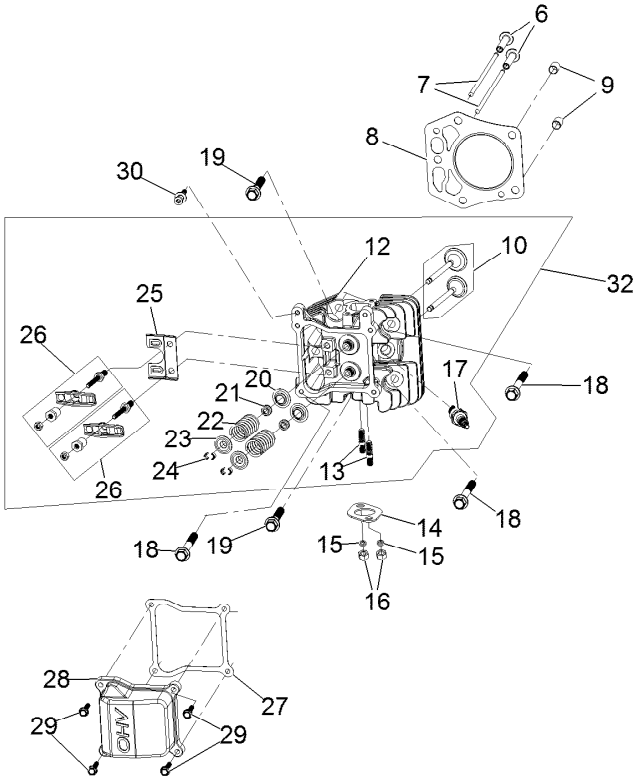

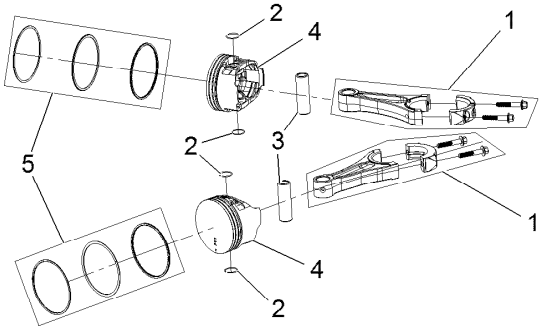

Piston and Cylinder Head Assembly (continued)

Ref.	Part Number	Qty.	Description
1	127-9256	2	Connecting Rod ASM
2	127-9258	4	Clip-Pin, Piston
3	127-9257	2	Pin-Piston
4	127-9259	2	Piston
5	127-9260	2	Piston Ring Set
6	127-9224	4	Lifter-Valve
7	127-9225	4	Rod-Push
8	127-9226	2	Gasket-Head, Cylinder
9	127-9227	4	Pin-Dowel
10	127-9228	2	Valve Set
11	133-9802	1	Head-Cylinder, Right
12	133-9804	1	Head-Cylinder, Left
13	121-0464	4	Stud-Exhaust
14	120-4317	2	Gasket-Exhaust
15	127-9279	4	Washer-Lock, Split
16	121-0199	4	Nut-HH
17	81-3250	2	Spark Plug
18	127-9231	6	Screw-HWH
19	127-9232	4	Screw-HWH
20	120-4303	4	Seat-Spring, Valve
21	120-4304	4	Seal-Stem, Valve
22	120-4305	4	Spring-Valve
23	120-4306	4	Retainer-Spring, Valve
24	120-4307	8	Keeper-Valve
25	127-9233	2	Plate-Guide, Push Rod
26	127-9294	4	Rocker Arm ASM
27	127-9295	2	Gasket-Valve Cover
28	127-9050	2	Cover-Valve
29	120-4225	8	Screw-HHF
30	120-4214	1	Screw-Shoulder, HH
31	133-9819	1	Right Head ASM
32	133-9820	1	Left Head ASM

Blower Housing Assembly

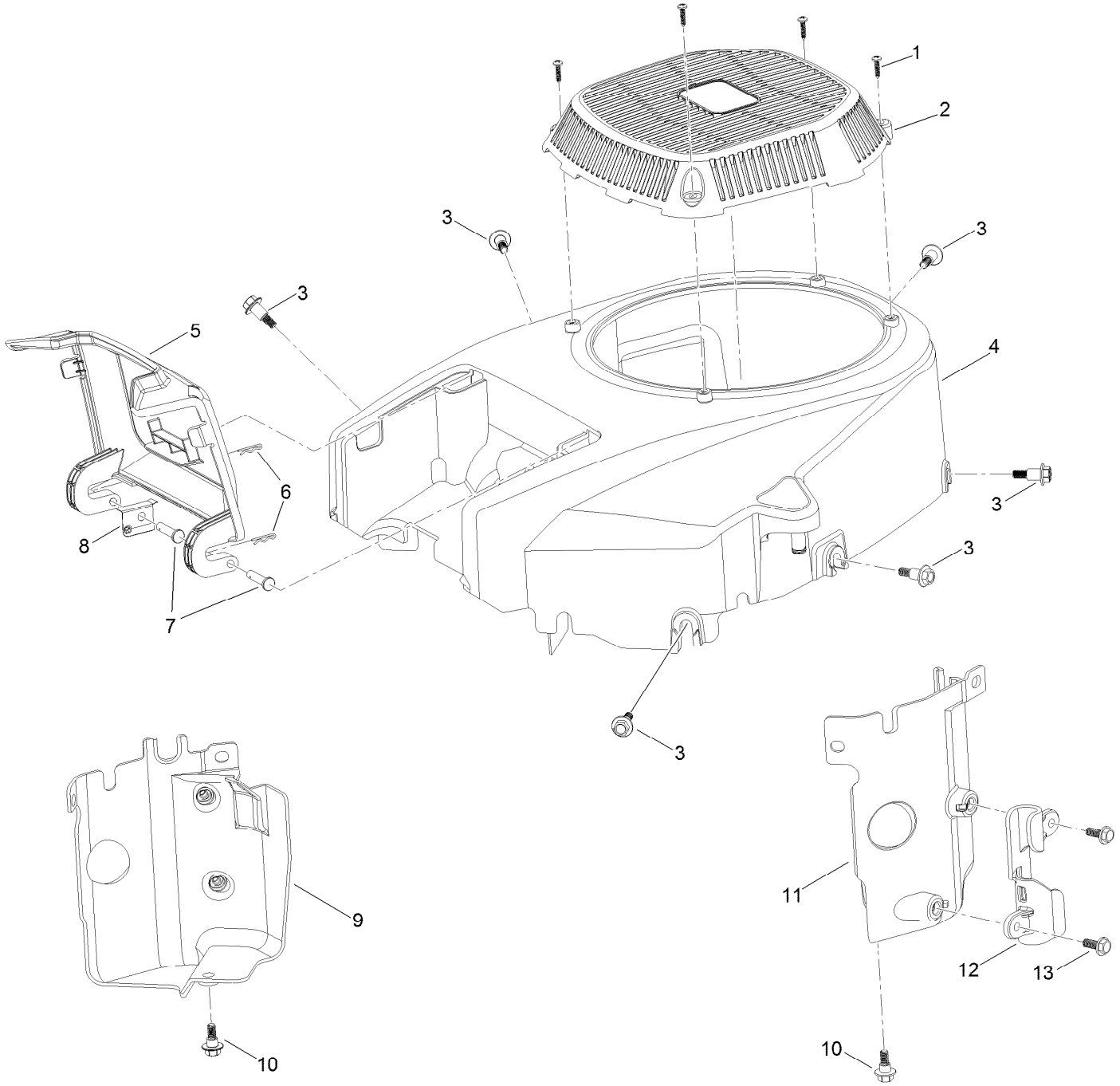

Blower Housing Assembly (continued)

Ref.	Part Number	Qty.	Description
1	133-1571	4	Screw-PPH, Plastic
2	127-9045	1	Cover-Fan
3	127-9196	6	Screw-Shoulder, HWH
4	133-1572	1	Shroud-Engine
5	127-9046	1	Door-Filter, Air
6	127-9280	2	Pin-Hair
7	127-9282	2	Pin
8	127-9281	1	Plate-Spring
9	127-9049	1	Baffle-Air, Left
10	120-4210	2	Screw-Shoulder, HHF
11	127-9048	1	Baffle-Air, Right
12	127-9287	1	Cleat-Hose
13	120-4232	2	Screw-HHF

Gasket and Seal Kit

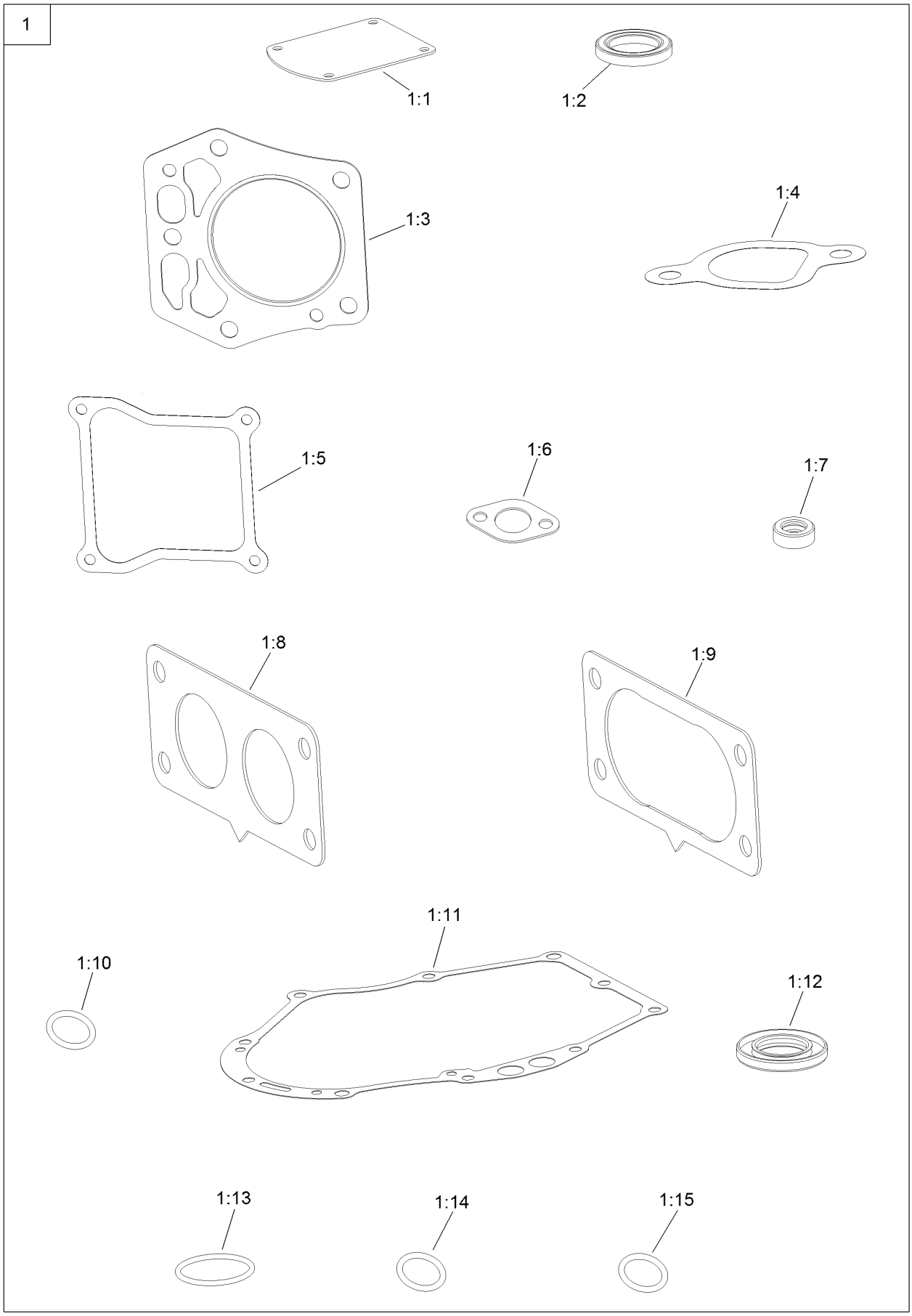

Gasket and Seal Kit (continued)

Ref.	Part Number	Qty.	Description
1	127-9296	1	Gasket And Seal Kit
1:1	127-9214	1	Gasket-Breather
1:2	120-4267	1	Seal-Oil
1:3	127-9226	2	Gasket-Head, Cylinder
1:4	127-9230	2	Gasket-Intake
1:5	127-9295	2	Gasket-Valve Cover
1:6	120-4317	2	Gasket-Exhaust
1:7	120-4257	1	Seal-Oil

Ref.	Part Number	Qty.	Description
1:8	127-9246	2	Gasket-Carburetor
1:9	127-9251	1	Gasket-Carburetor
1:10	120-4262	2	O-Ring
1:11	127-9267	1	Gasket-Cover, Crankcase
1:12	127-9271	1	Seal
1:13	127-9273	1	O-Ring
1:14	127-9284	1	O-Ring
1:15	127-9286	1	O-Ring

Attachments and Accessories

For 74450 48in TITAN HD 1500 Series Riding Mower

Product Name	Model/Part
Hypr-Oil 500 (quart)	114-4713
Hypr-Oil 500 (gallon)	114-4714
Hypr-Oil 500-5 (5 gallon)	114-4715
Seat Cover w/Arm Rest	117-0097
Toro Hydro Kit	121-3783
LED Light Kit	126-5382
Front Bucket Bracket Kit	126-7011
Striper Kit	126-7882
Sunshade Kit	126-8077
Cover-Hitch	126-8299
Trash Container Kit	126-8379
Weight Caster Kit	126-8639
48in Recycler Kit	126-8701
Flat Free Wheel and Bearing Kit	126-9368
Jack Kit	127-6666
MVP Belt and Blade Kit	127-6795
Toro V-Twin Engine Maintenance Kit	132-4878
Blade-Rotary, 16.5in (hi Flow)	133-2137
Blade-Rotary, Atomic 16.5	133-2160
Blade-Rotary, Recycling 16.5in	133-2163
Blade (6 Pack) 16.5in Hi Flow	133-2176
Blade (6 Pack) 16.5in Recycle	133-2179
Blade (6 Pack) 16.5in Atomic	133-2182
5 Gallon Bucket	133-2533
High Altitude Kit	133-9833
Trimmer Mount Kit	136-1682
ROPS Pin Kit	136-1683
High Altitude Kit	136-7837
HD Air Cleaner Kit	136-7860
Bucket Mount Kit	136-9045
Universal Mount Kit Mower	136-9046
Titan HD Triple Threat Attachment Kit	136-9047
Toro Deluxe Rider Cover	490-7319
Heavy Duty Bagger Kit	78431
48in Completion Kit (Heavy Duty Bagger)	78433
Standard EZ Vac Bagger	78481
48in Completion Kit (Standard Bagger)	78483

Notes:

TORO®

Count on it.