Form No. 3323-560

TORO®

CCR Powerlite®

Snowthrower

Model No. 38173—200000001 and Up

Model No. 38183—200000001 and Up

Operator’s Manual

CE

International English (GB)

Contents

	Page
Introduction	2
Safety	2
General Snowthrower Safety	3
Toro Snowthrower Safety	4
Sound Pressure Level	5
Sound Power Level	5
Vibration Level	5
Symbol Glossary	5
Assembly	9
Loose Parts	9
Installing the Discharge Chute	9
Installing the Handle	10
Installing the Control Cable	10
Before Starting	11
Mixing Gasoline and Oil	11
Operation	12
Operating Controls	12
Starting the Engine	12
Stopping the Engine	13
Starting the Rotor Blades	13
Stopping the Rotor Blades	13
Adjusting the Discharge Chute	13
Throwing Snow	13
Folding the Snowthrower	14
Maintenance	14
Recommended Maintenance Schedule	14
Adjusting the Control Cable	15
Emptying the Fuel Tank	15
Replacing the Scraper	15
Replacing the Drive Belt	16
Replacing the Spark Plug	16
Replacing the Rotor Blades	17
Storage	18
Preparing the Engine	18
Tightening the Fasteners and Cleaning the Snowthrower	18
Covering and Storing the Snowthrower	19

Introduction

Thank you for choosing a Toro product. We want you to be completely satisfied with your new purchase.

Read this manual carefully to learn how to operate and maintain your product properly. The information in this manual can help you and others avoid injury and product damage. Although Toro designs and produces safe products, you are responsible for operating the product properly and safely.

Whenever you contact your Authorized Service Dealer or the factory for help with service, genuine Toro parts, or additional information, have the model number and the serial number of your product handy. You will find the model number and serial number decal on the product as illustrated in Figure 1.

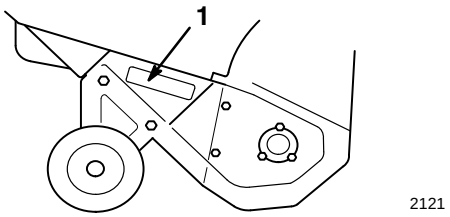

Figure 1

1. Model number and serial number decal

Write the product model number and serial number in the space below:

Model No. _____

Serial No. _____

This manual identifies potential hazards and has special safety messages that help you and others avoid personal injury and even death. DANGER, WARNING, and CAUTION are words used to identify the level of hazard.

DANGER signals an extreme hazard that will cause serious injury or death if you do not follow the recommended precautions.

WARNING signals a hazard that may cause serious injury or death if you do not follow the recommended precautions.

CAUTION signals a hazard that may cause minor or moderate injury if you do not follow the recommended precautions.

This manual uses two other words to highlight information. **Important** calls attention to special mechanical information and **Note** emphasizes general information worthy of special attention.

Safety

To ensure maximum safety, best performance, and to gain knowledge of the product, it is essential that you and any other operator of the snowthrower read and

©**The Toro Company – 1999**
8111 Lyndale Ave. South
Bloomington, MN 55420–1196

Printed in USA

understand the contents of this manual before the motor is ever started. Pay particular attention to the safety alert symbol ⚠ which means CAUTION, WARNING, OR DANGER — "personal safety instruction." Read and understand the instruction because it has to do with safety. Failure to comply with instruction may result in personal injury.

The snowthrower is designed and tested to offer reasonably safe service; however, **failure to comply with the following instructions may result in personal injury.**

General Snowthrower Safety

The following instructions have been adapted from the ANSI/OPEI standard B71.3—1995 and ISO standard 8437:1989. Information or terminology specific to Toro snowthrowers is enclosed in parenthesis.

Training

- Read the operator's manual carefully. Be thoroughly familiar with the controls and the proper use of the equipment. Know how to stop the unit and disengage the controls quickly.
- Never allow children to operate the equipment. Never allow adults to operate the equipment without proper instruction.
- Keep the area of operation clear of all persons, particularly small children and pets.
- Exercise caution to avoid slipping or falling, especially when operating in reverse.

Preparation

- Thoroughly inspect the area where the equipment is to be used and remove all doormats, sleds, boards, wires, and other foreign objects.
- Disengage all clutches and shift into neutral before starting the engine.
- Do not operate the equipment without wearing adequate winter garments. Wear footwear which will improve footing on slippery surfaces.
- Handle fuel with care; it is highly flammable.
  - Use an approved fuel container.
  - Never add fuel to a running or hot engine.
  - Fill fuel tank outdoors with extreme care. Never fill fuel tank indoors.
  - Replace gasoline caps securely and wipe up spilled fuel.
- Use only the power cord supplied with the snowthrower and a receptacle appropriate for use with the cord for electric starting motors.
- Adjust the collector (auger) housing height to clear gravel or crushed rock surface. (This is not necessary on single-stage snowthrowers.)
- Never attempt to make any adjustments while the engine is running, except where specifically recommended by manufacturer (Toro).
- Let engine and machine adjust to outdoor temperatures before starting to clear snow.
- The operation of any powered machine can result in foreign objects being thrown into the eyes. Always wear safety glasses or eye shields during operation or while performing an adjustment or repair.

Operation

- Do not put hands or feet near or under rotating parts. Keep clear of the discharge opening at all times.
- Exercise extreme caution when operating on or crossing gravel drives, walks, or roads. Stay alert for hidden hazards or traffic.
- After striking a foreign object, stop the engine, remove the wire from the spark plug, thoroughly inspect the snowthrower for any damage, and repair the damage before restarting and operating the snowthrower.
- If the unit should start to vibrate abnormally, stop the engine and check immediately for the cause. Vibration is generally a warning of trouble.
- Stop the engine whenever you leave the operating position, before unclogging the collector/impeller (auger/impeller) housing or discharge guide (chute), and when making any repairs, adjustments, or inspections.
- When cleaning, repairing, or inspecting, make certain the collector/impeller (auger/impeller or rotor blades) and all moving parts have stopped. Disconnect the spark-plug wire, and keep the wire away from the plug to prevent someone from accidentally starting the engine. Disconnect the cable on electric motors.
- Do not run the engine indoors, except when starting it and for moving the snowthrower in or out of the building. Open the outside doors; exhaust fumes are dangerous.
- Do not clear snow across the face of slopes. Exercise extreme caution when changing direction on slopes. Do not attempt to clear steep slopes.
- Never operate the snowthrower without proper guards. plates or other safety protective devices in place.

- Never operate the snowthrower near glass enclosures, automobiles, window wells, drop-offs, etc. without proper adjustment of the snow discharge angle. Keep children and pets away.
- Do not overload the machine capacity by attempting to clear snow at too fast a rate.
- Never operate the machine at high transport speeds on slippery surfaces. Look behind and use care when moving in reverse.
- Never direct discharge at bystanders or allow anyone in front of the unit.
- Disengage power to the collector/impeller (auger/impeller or rotor blades) when snowthrower is transported or not in use.
- Use only attachments and accessories approved by the manufacturer of snowthrower (Toro), such as wheel weights, counterweights, cabs, etc. (Refer to your Authorized Service Dealer for accessories available for your snowthrower.)
- Never operate the snowthrower without good visibility or light. Always be sure of your footing, and keep a firm hold on the handles. Walk; never run.

Maintenance and storage

- Check all fasteners at frequent intervals for proper tightness to be sure the equipment is in safe working condition.
- Never store the machine with fuel in the fuel tank inside a building where ignition sources are present such as hot water and space heaters, clothes dryers, etc. Allow the engine to cool before storing in any enclosure.
- Always refer to this operator's manual for important details if the snowthrower is to be stored for an extended period.
- Maintain or replace safety and instruction labels, as necessary.
- Run the machine a few minutes after throwing snow to prevent freeze-up of the collector (auger)/impeller. (With the engine running, pull the recoil starter handle several times.)

Toro Snowthrower Safety

The following list contains safety information specific to Toro products or other safety information that you must know that is not included in the ANSI or ISO standards.

- **The rotating impeller/auger or rotor blades can cut off or injure fingers or hands.** Stay behind the handles and away from the discharge opening while operating the snowthrower. **Keep your face hands, feet, and any other part of your body or clothing away from concealed, moving, or rotating parts.**
- Before adjusting, cleaning, repairing, and inspecting the snowthrower, and before unclogging the discharge chute, **stop the engine, remove the key, and wait for all moving parts to stop**. Also, pull the wire off of the spark plug and keep it away from the plug to prevent someone from accidentally starting the engine.
- Use a stick, **not your hands** to remove obstructions from the discharge chute.
- **Before** leaving the operator's position behind the handles, stop the engine, remove the key, and wait for all moving parts to stop.
- Do not wear loose fitting clothing that could possibly get caught in moving parts.
- If a shield, safely device, or decal is damaged, illegible, or lost, repair or replace it before beginning operation. Also, tighten any loose fasteners.
- **Do not** smoke while handling gasoline.
- For two-stage snowthrowers, use the lower gear and, for Power Shift snowthrowers, the rear wheel position when operating on slopes.
- **Do not** use the snowthrower on a roof.
- Do not touch the engine while it is running or soon after it is stopped because the engine will be hot enough to cause a burn. Do not add oil or check the oil level in the crankcase when the engine is running.
- Perform only those maintenance instructions described in this manual. Before performing any maintenance, service, or adjustment, stop the engine, remove the key and pull the wire from the spark plug, keeping it away from the plug to prevent someone from accidentally starting the engine. If major repairs are ever needed, contact your Authorized Toro Service Dealer.
- Do not over speed the engine by changing the governor settings.
- When storing the snowthrower for more than 30 days, drain the gasoline from the fuel tank to prevent a potential hazard. Store gasoline in a safety approved, red container. Remove the key from the ignition switch before storing the snowthrower.
- To ensure the best performance and safety, purchase only genuine Toro replacement parts and accessories to keep the Toro all Toro. **Do not use "Will Fit" replacement parts and accessories as they could cause a safety hazard.**

Sound Pressure Level

This unit has a sound pressure at the operator's ear of 90 dB(A), based on measurements of identical machines per Directive 81/1051/EEC.

Sound Power Level

This unit has a sound power level of 103 LwA, based on measurements of identical machines per Directive 79/113/EEC.

Vibration Level

This unit has a maximum hand-arm vibration level of 11.4 m/s^2, based on measurements of identical machines per EN 1033.

Symbol Glossary

Safety alert triangle – symbol within triangle indicates a hazard

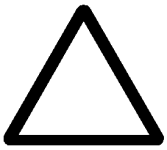

Safety alert symbol



Read operator's manual



Consult technical manual for proper service procedures



Shut off engine and remove key before performing maintenance or repair work

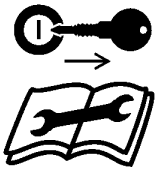

Shut off engine and remove key before leaving operator position – single stage snowthrower



Do not open or remove safety shields while engine is running

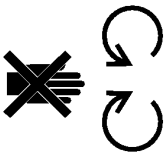

Stay a safe distance from the machine

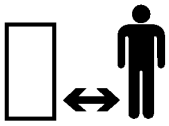

Stay a safe distance from the machine – single stage snowthrower



Stay a safe distance from the machine – two stage snowthrower

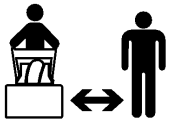

Thrown or flying objects – Whole body exposure



Electrical shock – electrocution



Shut off engine and remove key before leaving operator position – two stage snowthrower



Severing of fingers or hand – impeller blade



Hot surfaces – burns to fingers or hands



Caustic liquids – chemical burns to fingers or hands



Do not tip battery

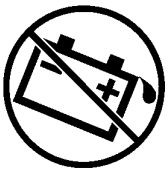

Keep dry



Machine travel direction – forward



Machine travel direction – rearward



Cutting or entanglement of foot – rotating auger



Electric start

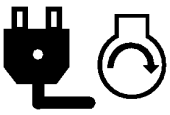

Machine loss of control – uphill slope



Machine loss of control – downhill slope



Traction drive



Snowthrower collector auger



Engage

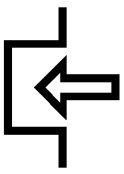

Disengage

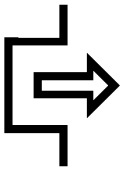

On/start



Off/stop

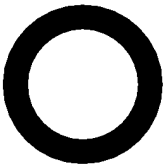

Fast



Slow



Decreasing/Increasing



Engine start

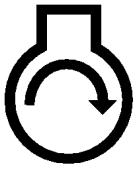

Engine stop



Snowthrower chute direction



Choke

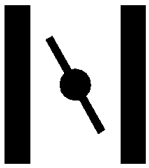

Engine speed (Throttle)



Neutral



Snowthrower collector auger/impeller



Lock



Unlock



Lever operation



Lever operation



Primer (start aid)



Primer operation

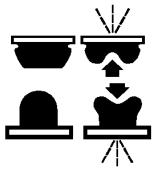

Throttle operation

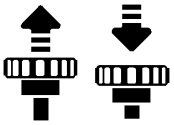

PowerShift operation

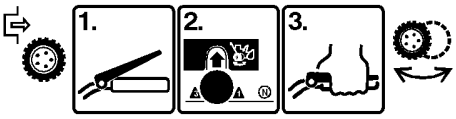

Belt routing

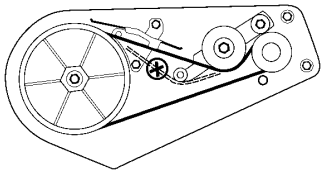

Unleaded fuel



Cutting of fingers or hand



Cutting of foot



Assembly

Note: Determine the left and right sides of the snowthrower by standing in the normal operating position.

Loose Parts

DESCRIPTION	QTY.	USE
Hex bolts	2	Installing the discharge chute
Locknuts	2	
Washers	2	
Discharge chute	1	
Upper handle	1	Installing the handle
Knobs	2	
Oval head bolts	2	
Curved washers	2	
Spring	1	Installing the control cable
Spring cover	1	
Cable adjuster	1	
Control cable	1	

Installing the Discharge Chute

1. Position the holes on the discharge chute over the hex bolts on the sides of the chute handle (Fig. 2).
2. Secure the discharge chute onto the hex bolts with two washers and two locknuts (Fig. 2).
3. While holding the hex bolt heads with a 7/16-inch (11 mm) wrench, tighten the locknuts securely.
4. Rotate the discharge chute to the upright position.
5. Install the locknut and washer **tightly** onto the screw at the rear of the discharge chute (Fig. 2).

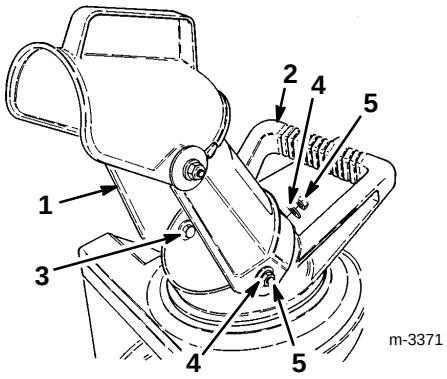

Figure 2

1. Discharge chute
2. Chute handle
3. Hex bolt
4. Washer
5. Locknut

Installing the Handle

1. Position the ends of the upper handle on the inside of the lower handles and align the holes (Fig. 3). Ensure that the handle is positioned so that the control bar is on the upper side of the handle.
2. Secure the upper handle to the lower handle using oval head bolts, curved washers, and knobs (Fig. 3).
3. Position the knobs and curved washers on the inside of the handle and **tighten the knobs securely**.

Note: Ensure that you properly align the oval head bolts and the curved washers (See inset in Fig. 3).

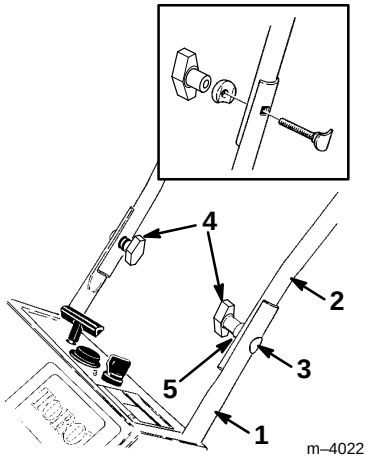

Figure 3

1. Lower handle
2. Upper handle
3. Oval head bolt
4. Knob
5. Curved washers

Installing the Control Cable

1. Route the control cable through the loop on the left side of the snowthrower (Fig. 4).

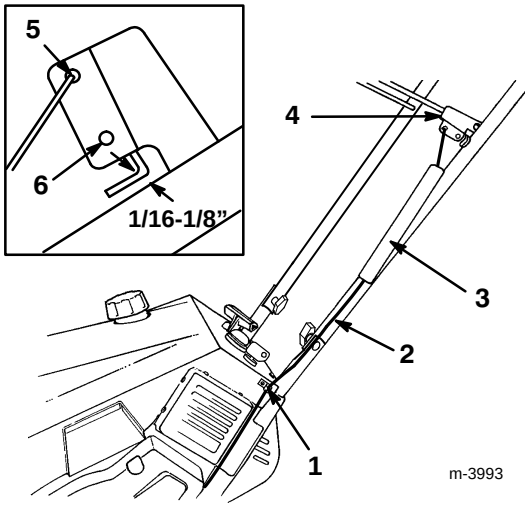

Figure 4

1. Loop
2. Control cable
3. Spring cover
4. Control bar bracket
5. Top hole
6. Bottom hole

2. Hook the spring to the round hole at the end of the cable adjuster (Fig. 5).
3. Secure the end of the cable to the cable adjuster as illustrated in Figure 5.

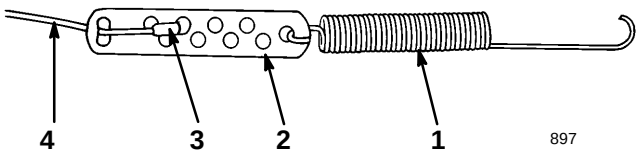

Figure 5

1. Spring
2. Cable adjuster
3. Z fitting
4. Cable

4. Slide the spring cover over the spring and the cable adjuster and push the spring end through the hole at the end of the spring cover (Fig. 4).
5. Hook the spring into the top hole of the control bar bracket (Fig. 4).
6. Move the control bar back toward the handle to remove the slack in the cable.

7. Ensure that a 1/16 to 1/8 inch (0.16 to 0.32 cm) gap exists between the control bar and the handle (Refer to the inset in Fig. 4). To adjust this gap, refer to *Adjusting the Control Cable* on page 15.

IMPORTANT: The control cable must contain slack when it is in the disengaged position.

Before Starting

DANGER

POTENTIAL HAZARD
- **In certain conditions, gasoline is extremely flammable and highly explosive.**

WHAT CAN HAPPEN
- **A fire or explosion from gasoline can burn you and others and cause property damage.**

HOW TO AVOID THE HAZARD
- **Use a funnel and fill the fuel tank in an open, outdoor area and when the engine is cold. Wipe up any gasoline that spills.**
- **Do not fill the fuel tank completely full. Add gasoline to the fuel tank until the level is 1/4 to 1/2 in. (6 mm to 13 mm) below the bottom of the filler neck. This empty space in the tank allows the gasoline to expand.**
- **Never smoke when handling gasoline, and stay away from an open flame or where gasoline fumes may be ignited by a spark.**
- **Store gasoline in an approved container and keep it out of the reach of children.**
- **Never buy more than a 30-day supply of gasoline.**

DANGER

POTENTIAL HAZARD
- **When fueling, under certain circumstances, a static charge can develop, igniting the gasoline.**

WHAT CAN HAPPEN
- **A fire or explosion from gasoline can burn you and others and cause property damage.**

HOW TO AVOID THE HAZARD
- **Always place gasoline containers on the ground away from your vehicle before filling.**
- **Do not fill gasoline containers inside a vehicle or on a truck or trailer bed because interior carpets or plastic truck bed liners may insulate the container and slow the loss of any static charge.**
- **When practical, remove gas-powered equipment from the truck or trailer and refuel the equipment with its wheels on the ground.**
- **If this is not possible, then refuel such equipment on a truck or trailer from a portable container, rather than from a gasoline dispenser nozzle.**
- **If a gasoline dispenser nozzle must be used, keep the nozzle in contact with the rim of the fuel tank or container opening at all times until fueling is complete.**

Mixing Gasoline and Oil

Use only clean, fresh, unleaded gasoline (including oxygenated or reformulated gasoline) with an octane rating of 87 or higher. To ensure freshness, purchase only the amount of gasoline you expect to use in 30 days. Using unleaded gasoline results in fewer combustion chamber deposits and longer spark plug life.

IMPORTANT: Do not use an automotive oil (i.e. SAE 30, 10W30 etc.), a two-cycle oil that is not NMMA- or TCW-certified, or a fuel mixed at the wrong gasoline/oil ratio. This can cause engine damage not covered under the Toro warranty.

1. Pour a half gallon (1.9 liters) of gasoline into an approved gasoline container (preferably plastic, not metal).
2. Add the proper amount of a high grade, NMMA- or TCW-certified two-cycle oil.

   For best results, use *Toro Heavy Duty 50:1 All Season 2-Cycle Engine Oil with Fuel Stabilizer.*
3. Install the cap on the gasoline container and shake the container to mix the gasoline and oil thoroughly.
4. Remove the cap and add the remaining gasoline.

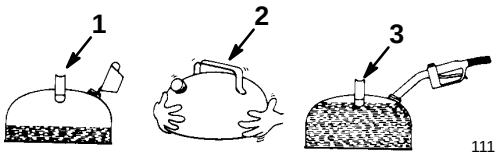

Figure 6

1. Add oil to small amount of gasoline
2. Install cap and shake can to mix
3. Add remaining amount of gasoline

We recommend using a fuel stabilizer/conditioner for all Toro gasoline-powered products during operation and storage. A fuel stabilizer/conditioner cleans the engine during operation and prevents gum-like varnish deposits from forming in the engine during storage. A fuel stabilizer/conditioner works best when you mix it with fresh gasoline.

Note: If you use *Toro Heavy Duty 50:1 All Season 2-Cycle Engine Oil with Fuel Stabilizer*, you do not need to add a fuel stabilizer/conditioner.

IMPORTANT: Never use methanol, gasoline containing methanol, gasohol containing more than 10% ethanol, premium gasoline, or white gas. Using these fuels can damage the engine's fuel system.

IMPORTANT: Do not use fuel additives except a fuel stabilizer during storage. We recommend that you do not use fuel stabilizers with an alcohol base such as ethanol, methanol, or isopropanol.

Note: Do not mix gasoline and oil in the fuel tank. Oil at room temperature mixes easier and more thoroughly than cold oil. Oil below 32°F (0°C) requires additional mixing.

Operation

Operating Controls

The snowthrower control panel contains a key switch, a primer, an electric start button (if applicable), and a recoil starter. The choke lever is just below the lower left corner of the control panel (Fig. 7).

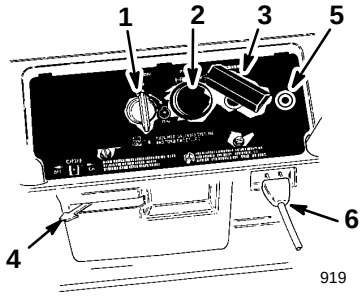

Figure 7

1. Key switch
2. Primer
3. Recoil start
4. Choke lever
5. Elec. start button*
6. Cord connection*

* ELEC. START MODEL

Starting the Engine

1. Turn the key to the On position.

2. Turn the choke level to the On (far right) position.

3. Cover the hole in the center of the primer button with your thumb and slowly push the primer button in twice. In extremely cold temperatures, repeat this step as necessary.

Note: Do not use the choke and the primer when starting a warm engine.

Note: When you start the engine for the first time or after running out of fuel, you may need to use the primer more.

4. For a recoil starter: Hold the snowthrower with one hand and pull the recoil starter vigorously with the other hand.

For an electric starter:

A. Connect the power cord to the snowthrower and to a standard household power outlet.

CAUTION

POTENTIAL HAZARD
- **If the snowthrower is left plugged in to a power outlet, it can be inadvertently started.**

WHAT CAN HAPPEN
- **Someone could become injured or property damage could occur.**

HOW TO AVOID THE HAZARD
- **Unplug the cord whenever the snowthrower is not in use.**

B. Push the starter button.

Run the electric starter no more than 10 times at intervals of 5 seconds on, then 5 seconds off. If the engine does not start after this attempt, wait at least 40 minutes to allow the starter to cool before attempting to start it again.

IMPORTANT: Running the electric starter extensively can overheat and damage the starter.

If the engine does not start after the second attempt, bring the snowthrower to an Authorized Service Dealer for service.

C. When the engine starts, disconnect the power cord from the snowthrower and the outlet.

5. When the engine is warmed up, move the choke lever to the Off position.

Stopping the Engine

Turn the key to the Off position, and wait for all moving parts to stop before leaving the operating position.

Starting the Rotor Blades

To start the rotor blades, squeeze the control bar and handle together.

Stopping the Rotor Blades

Release the control bar to stop the rotor blades.

Note: When you release the control bar, the rotor blades stop, but the engine continues to run.

Adjusting the Discharge Chute

Move the chute handle left and right to adjust the direction of the snow stream (Fig. 8). The chute deflector handle on top of the discharge chute controls the height of the snow stream. **Do not overtighten the chute deflector mounting nuts.**

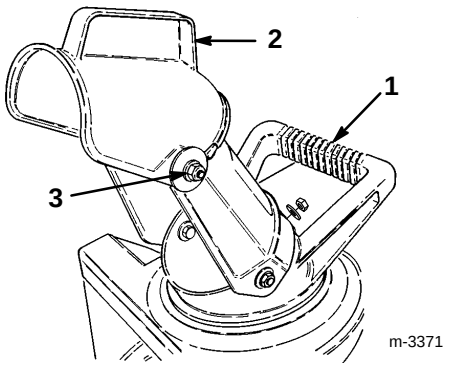

Figure 8

1. Chute handle
2. Chute deflector handle
3. Deflector mounting nuts

Throwing Snow

WARNING

POTENTIAL HAZARD
- **Stones, toys and other foreign objects may be picked up and thrown by the rotor blades.**

WHAT CAN HAPPEN
- **Thrown objects can cause serious personal injury to operator or bystanders.**

HOW TO AVOID THE HAZARD
- **Keep the area to be cleared free of all objects that could be picked up and thrown by rotor blades.**
- **Keep all children and pets away from area of operation.**

- The snowthrower clears down to the ground and propels itself forward when you raise the handle. The snowthrower tilts **slightly** forward so that rotor blades strike the ground. The wheels do not need to touch the ground to self-propel. The more you tilt the handle forward, the faster the snowthrower self-propels.
- Always overlap each swath and discharge the snow downwind whenever possible.
- To clear snow from crushed rock or gravel, push down on the handle to raise the rotor blades clear of the loose material and push the snowthrower forward.

- In snowy and cold conditions, some controls and moving parts may freeze solid. **Do not use excessive force when trying to operate frozen controls.** If you have difficulty operating any control or part, start the engine and let it run for a few minutes.
- After clearing the snow, let the engine run for a few minutes to prevent moving parts from freezing. Shut off the engine and remove all ice and snow from the snowthrower.

IMPORTANT: Store the snowthrower in its operating position and on its wheels or hang it on a wall by its handle. Storing the snowthrower on its front housing may cause hard starting.

Folding the Snowthrower

DANGER

POTENTIAL HAZARD
- **Gasoline and its fumes are highly flammable, explosive, and dangerous if inhaled.**

WHAT CAN HAPPEN
- **If gasoline contacts a flame or is inhaled, serious personal injury an occur.**

HOW TO AVOID THE HAZARD
- **Always remove gasoline from snowthrower fuel tank before transporting in a closed car trunk or vehicle; refer to *Emptying the Fuel Tank* on page 15.**

1. Remove the locknut and washer from the rear of the discharge chute (Fig. 2).
2. Fold the chute down and install the locknut and washer tightly onto the bolt at the rear of the discharge chute handle (Fig. 9).
3. Loosen the knobs on the handle and fold the handle down over the snowthrower, ensuring that you do not kink the control cable (Fig. 9).
4. Carry the snowthrower by its discharge chute handle.
5. Tighten all the knobs **securely** after unfolding the handle and the chute.

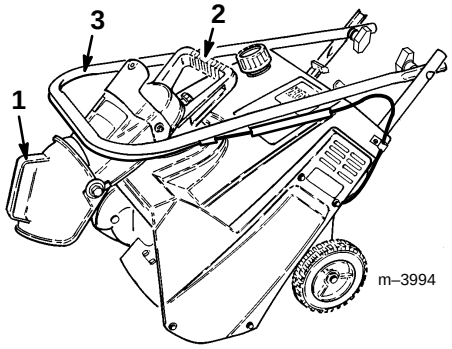

Figure 9

1. Discharge chute
2. Discharge chute handle
3. Handle

Maintenance

Recommended Maintenance Schedule

Service Item	Service Operation	Initial	At Storage	Comments
Control cable	Check the control cable. Adjust if necessary.	X	X	Check and adjust as needed.
Fuel tank	Drain the fuel and run the engine until the fuel tank and the carburetor are dry.		X	
Scraper	Check the scraper. Replace if necessary.		X	
Drive belt	Inspect the drive belt. Replace if necessary.		X	
Spark plug	Clean, inspect, and gap. Replace if necessary.		X	
Rotor blades	Inspect the rotor blades. Replace if necessary.		X	
Tighten fasteners	Check for loose fasteners and tighten them if necessary.	X	X	Tighten fasteners as needed.

CAUTION

POTENTIAL HAZARD
- **If you leave the wire on the spark plug, someone could start the engine.**

WHAT CAN HAPPEN
- **Accidental starting of engine could seriously injure you or other bystanders.**

HOW TO AVOID THE HAZARD
- **Pull the wire off of the spark plug before you do any maintenance. Also, push it aside so it does not accidentally contact the spark plug.**

Adjusting the Control Cable

Periodically check the control cable for proper adjustment.

1. Stop the engine and wait for all moving parts to stop.
2. Move the control bar back toward the handle to remove the slack in the cable (Fig. 4).
3. Ensure that a 1/16 to 1/8 in. (0.16 to 0.32 cm) gap exists between the control bar and the handle (Refer to the inset in Fig. 4). To adjust the cable, go to step 4.

Note: The control cable must have slack in the disengaged position.

4. Unhook the spring end from the top hole in the control bar bracket (Fig. 4).
5. Slide the spring cover off the spring and the cable adjuster.
6. Unhook the Z fitting from the cable adjuster and reposition the Z fitting in the top or bottom hole on the adjuster to obtain a proper gap of 1/16 to 1/8 in. (0.16 to 0.32 cm) between the control bar bracket and the handle (Fig. 5).
7. Install the spring cover over the cable adjuster and the spring.
8. Hook the spring into the top hole of the control bar bracket (Fig. 4).
9. Check the adjustment (refer to steps 2 and 3 above).

After extended use, the drive belt may wear and lose its proper belt tension. Improper belt tension causes belt slippage and decreases the performance under a heavy load. Belt slippage may occur after two or three seasons of normal usage (10 to 15 hours). If the drive belt slips (continuously squeals) under a heavy load, increase the belt tension by repositioning the spring end in the bottom hole of the control bar bracket (Fig. 4).

Using the incorrect adjusting hole in the control bar bracket can reduce the drive belt life. Occasional belt slippage (squealing) may occur in extremely wet conditions due to moisture in the drive system. To remove moisture, start the rotor and operate it without a load for 30 seconds. Once you remove the moisture, the drive belt should not slip.

Emptying the Fuel Tank

1. Stop the engine and remove the key from the switch.
2. Remove the fuel tank cap and use a pump-type syphon to drain the fuel into a clean and approved gasoline container.
3. Start the engine and allow it to run until all the engine consumes all the fuel in the fuel tank and the engine stops. Repeat this step two more times to remove all the fuel in both the fuel tank and the carburetor.

Replacing the Scraper

Before each season, inspect the scraper for wear. If the thickness of the scraper's bottom is less than 1/16 in. (1.6 mm), replace the scraper (Fig. 10).

1. Stop the engine and remove the key from the switch.
2. Pull the wire off the spark plug.
3. Remove the three screws holding the scraper in place.

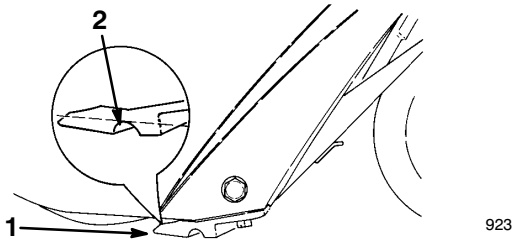

Figure 10

1. Scraper
2. Wear indicator groove

4. Remove the scraper.
5. Secure the new scraper to the housing with the three screws.

Replacing the Drive Belt

Inspect the drive belt before each season, and replace it if it is worn or damaged.

1. Stop the engine and remove the key from the switch.
2. Pull the wire off the spark plug.
3. Remove three self-tapping screws, one capscrew, one washer, and one nut that secures the left side cover to the snowthrower frame (Fig. 11).

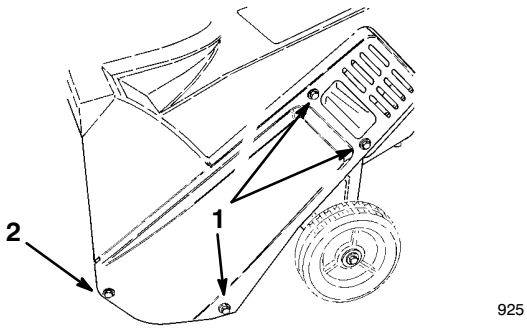

Figure 11

1. Self tapping screws
2. Capscrew, nut, washer

4. Remove the cover.
5. Loosen the four engine mounting nuts enough to allow the belt guide to rotate away from the drive pulley to remove the belt (Fig. 12).

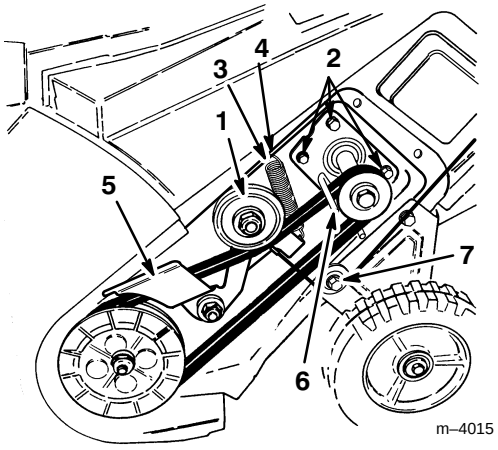

Figure 12

1. Idler pulley
2. Engine mounting nuts (3 of 4 shown)
3. Idler spring
4. Hole
5. Brake arm
6. Belt guide
7. Cable pulley

IMPORTANT: Removing the nuts will cause the engine to become loose.

6. Loosen the idler pivot nut (Fig. 13).

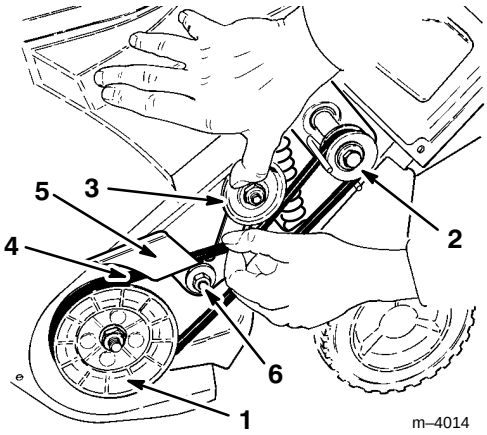

Figure 13

1. Rotor pulley
2. Drive pulley
3. Idler pulley
4. Drive belt
5. Brake arm
6. Idler pivot nut

7. Remove the drive belt from the rotor pulley (Fig. 13).
8. Push down on the idler pulley to release the brake arm and pull the drive belt from behind the brake arm (Fig. 13).
9. Slide the drive belt off of the drive pulley (Fig. 13).
10. Loop the new drive belt around the drive pulley and behind the brake arm (Fig. 13).
11. While holding the drive belt, slip the belt onto the rotor pulley and rotate the rotor with the other hand until the drive belt is completely on the rotor pulley (Fig. 13).
12. Ensure that the long end of the idler spring is hooked in the housing hole and the round end of the spring is hooked in the brake arm (Fig. 12).
13. Lift up the brake arm assembly, squeeze the drive belt together, and route the drive belt under the idler pulley (Fig. 12).
14. Torque the engine mounting nuts and the idler pivot nut (Fig. 13) to 170 to 200 in–lbs (19.2 to N·m).

IMPORTANT: Ensure that the drive cable is on the cable pulley before you install the left side cover (Fig. 12)

15. Install the left side cover and tighten fasteners securely, **but do not overtighten.**

Replacing the Spark Plug

Before each season, check the spark plug. If the electrodes in the center of the plug are dark or have deteriorated, install a new NGK BPMR4A spark plug.

1. Remove the two screws that secure the control panel to the housing (Fig. 14).

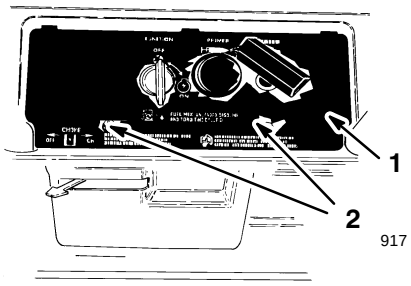

Figure 14

1. Control panel
2. Screws

2. Remove the ignition key and lift off the panel, allowing it to hang on the recoil rope.

3. Pull the wire off the spark plug and remove the spark plug (Fig. 15)

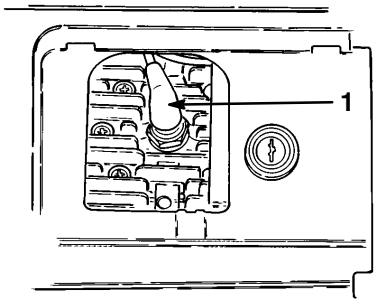

Figure 15

1. Spark plug wire

4. Examine the spark plug and replace it if it is cracked, fouled, or dirty.

IMPORTANT: Do not sandblast, scrape, or the clean spark plug. Dirt may fall into the cylinder and cause engine damage.

5. Set the gap between the electrodes at .030 in. (.76 mm). Install the plug and tighten to 15 ft-lb (20.4 N·m). If the torque wrench is not used, tighten the plug firmly by hand; do not overtighten.

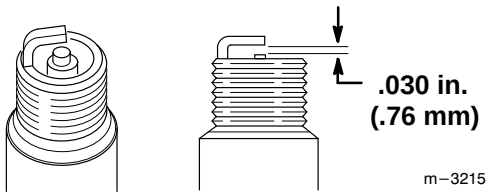

6. Push the wire onto the spark plug and install the control panel.

Replacing the Rotor Blades

Before each snowy season, inspect the rotor blades for wear. When a rotor blade edge has worn to the wear indicator hole (Fig. 16), replace **both** rotor blades to ensure proper performance and to prevent damage to the underside of the snowthrower.

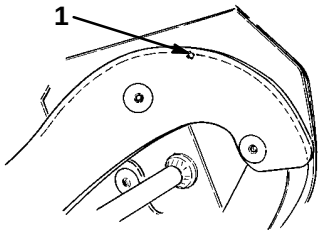

Figure 16

1. Wear indicator hole

Note: Replace the scraper whenever you replace the rotor blades. This ensures proper snowthrower operation and performance.

Note: The running time and the roughness of the driveway or the sidewalk determines the wear rate of the rotor blades.

Before replacing the rotor blades, stop the engine, remove the key from the switch, and pull the wire off from the spark plug.

Removing the Old Blade

Note: You will need a T27 torx driver to complete this procedure.

1. Remove four torx screws, two caps screws, and six locknuts that secure the blade to the rotor shaft assembly.

2. Slide the blade out from between the blade supports (Fig. 17).

Installing a New Blade

1. Examine a new rotor blade edge for the difference in layer thickness (Fig. 17). Some rotor blades have a part number on the thick side of the blade.

Install the rotor blades with the thick layer on the **inside** of the curve. (Fig. 17). If you do not install the blades properly, the blades may be out of balance and cause the snowthrower to “hop” or “bounce.”

2. Insert the new blade between the blade supports.

3. Secure the center of the blade to the blade supports with two capscrews and two locknuts.

4. Position the screw heads on the thick layer side of the blade (Fig. 17).
5. Curve the blade and secure it with the remaining four torx screws and locknuts, positioning the screw heads on the thick layer side of the blade (Fig. 17).
6. Tighten all screws and nuts securely.
7. Repeat steps 1 through 6 above to replace the other blade.

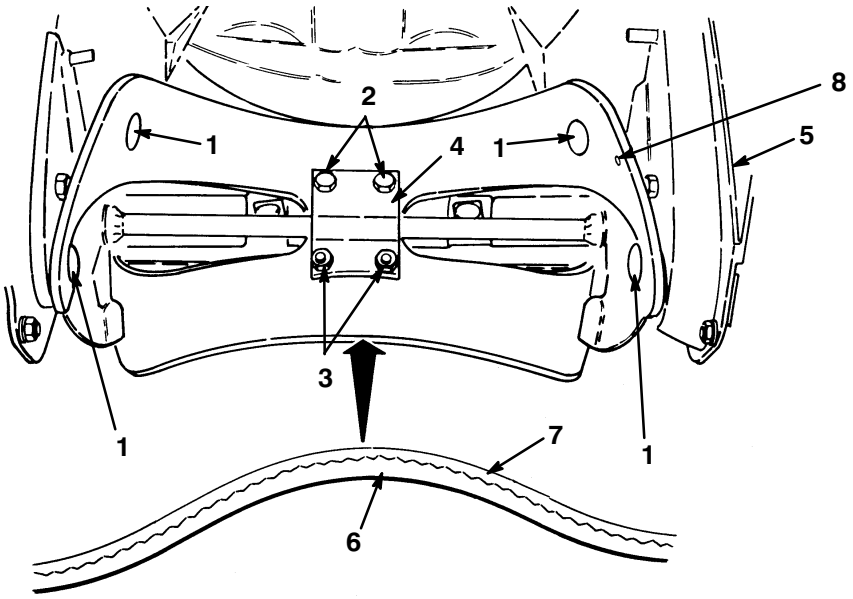

Figure 17

1. Torx screw
2. Capscrew
3. Locknut
4. Blade support
5. Drive belt cover
6. Thick layer
7. Thin layer
8. Wear indicator hole

Storage

1. Add a fuel stabilizer/conditioner to the fuel in the fuel tank as directed.

Note: A fuel stabilizer/conditioner works best when you mix it it with fresh gasoline.

Note: If you use *Toro Heavy Duty 50:1 All Season 2-Cycle Engine Oil with Fuel Stabilizer*, you do not need to add a fuel stabilizer/conditioner.

2. Run the engine for five minutes to distribute the conditioned fuel through the fuel system.
3. Stop the engine, allow it to cool, and drain the fuel tank.
4. Start the engine again and run it until it stops.
5. Either choke or prime the engine, start it a third time, and run it until it will not restart.
6. Recycle the fuel according to local codes.

Preparing the Engine

1. Slowly pull the recoil starter until you feel resistance due to compression pressure, then stop.
2. Release the starter tension slowly to prevent the engine from reversing due to compression pressure. This position closes both the intake and exhaust ports, preventing cylinder bore corrosion.

Tightening the Fasteners and Cleaning the Snowthrower

1. Tighten screws, bolts, and nuts if necessary. Repair or replace damaged parts.
2. Clean the snowthrower thoroughly.

Covering and Storing the Snowthrower

WARNING

POTENTIAL HAZARD
- **Gasoline is highly flammable, explosive, and dangerous if inhaled.**

WHAT CAN HAPPEN
- **If gasoline contacts a flame or is inhaled, serious personal injury an occur.**

HOW TO AVOID THE HAZARD
- **Never store the snowthrower in a house (living area) or a basement where ignition sources may be present, such as hot water and space heaters, clothes dryers.**
- **Allow the engine to cool before storing the snowthrower in an enclosure.**

Cover the snowthrower and store it in a clean, dry place out of the reach of children.


TORO®