FORM NO. 3323–570

TORO®

MODEL N0. 30551TE–200000001 & UP

PARTS CATALOG

62” SIDE DISCHARGE DECK
For Groundsmaster® 200 Series

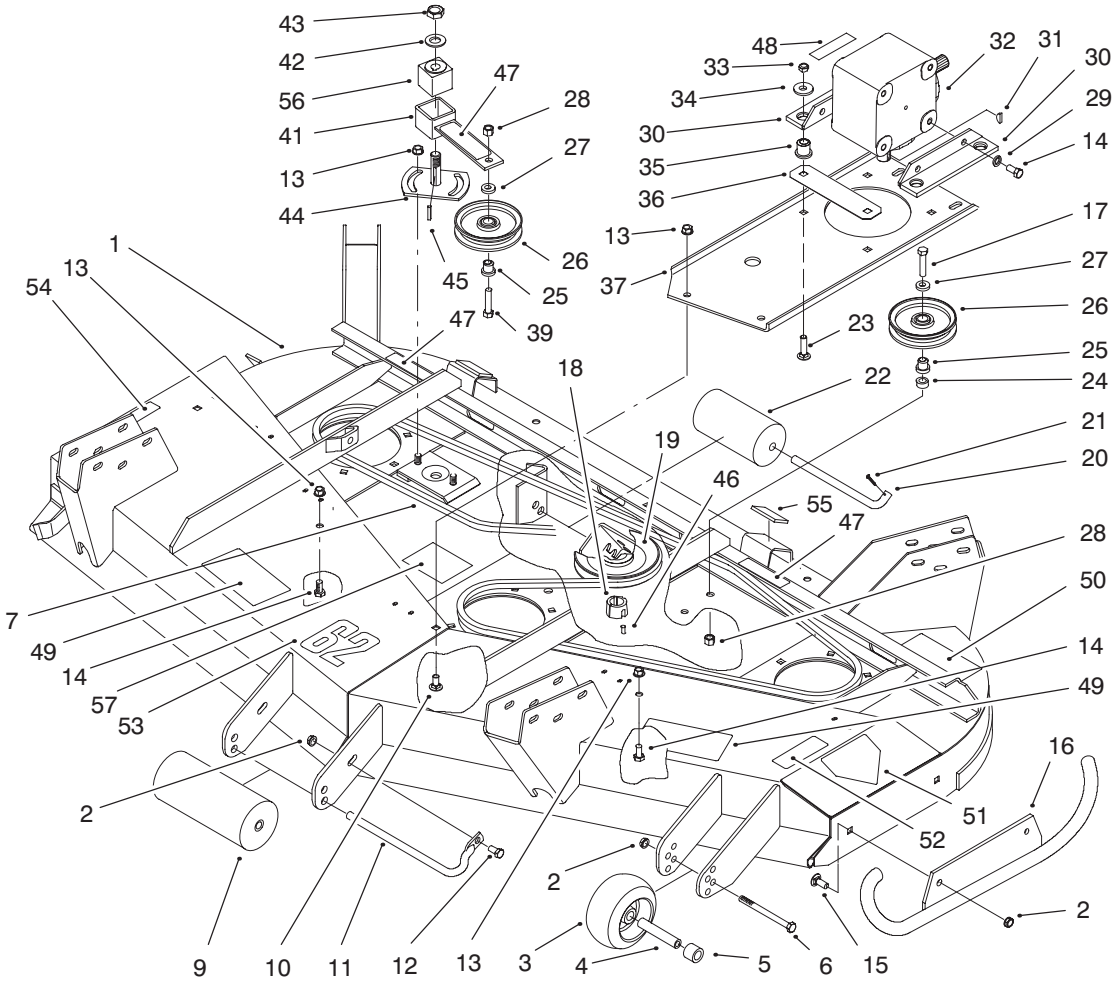

T–3060–2

ROLLER & DRIVE ASSEMBLY

Ref. No.	Part No.	Description	No. Used
1	99–1287	Deck Assembly (Incl. Ref. #47, 49–55 & 57)	1
2	32128–19	Nut–Hex. Flange	4
3	68–2730	Wheel–Gage	1
4	98–7912	Spanner	1
5	98–7913	Spacer	1
6	323–23	Screw–HH	1
7	44–6260	V–Belt	1
9	68–6710	Roller–Deck	1
10	3231–27	Screw–Carriage	4
11	68–6840	Shaft–Roller	1
12	3234–11	Screw–HHF	1
13	3290–357	Nut–Flange	8
14	323–4	Screw–HH	6
15	3231–22	Bolt–Carriage	2
16	99–1252	Skid Assembly	1
17	3211–9	Screw–HH	1

Ref. No.	Part No.	Description	No. Used
18	27–6140	Bushing–Taperlock (Incl. Ref. #46)	1
19	63–9900	Pulley Assembly–Gearbox	1
20	40–0340	Shaft–Roller, Rear	2
21	3272–11	Pin–Cotter	2
22	36–1740	Roller–Deck	2
23	3231–26	Bolt–Carriage	4
24	44–6390	Spacer	1
25	65–5950	Bushing–Pulley	2
26	65–5940	Bushing–Pulley	2
27	7–0081	Washer–Special	2
28	3296–5	Nut–Lock	2
29	3253–21	Washer–Lock	4
30	68–8560	Gearbox Bracket Assembly	2
31	3257–5	Key–Woodruff	1
32	68–6810	Gearbox	1
33	32153–2	Nut–Lock	4

© The TORO Company – 1999
All Rights Reserved

TPS

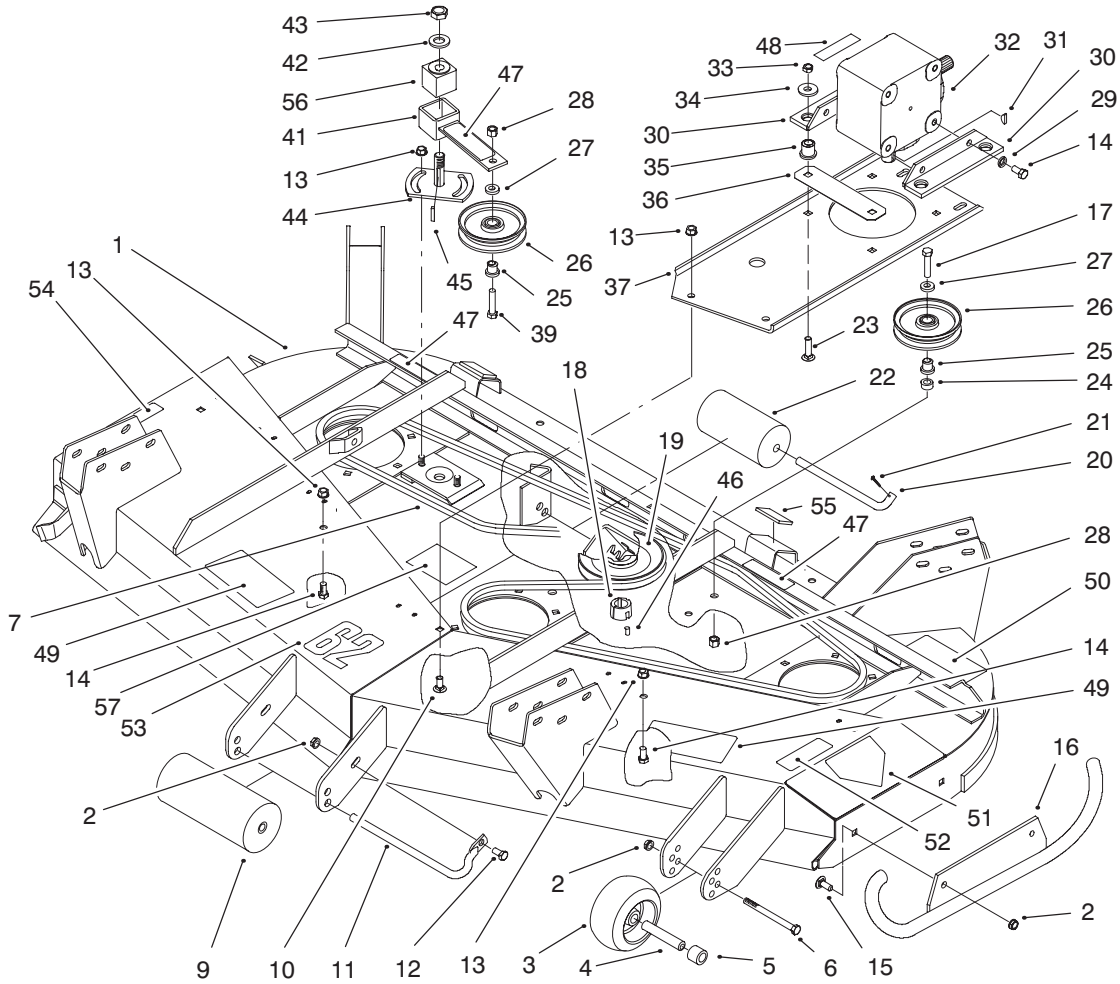

ROLLERS & DRIVE ASSEMBLY (Continued)

Ref. No.	Part No.	Description	No. Used
34	63−8410	Washer−Flat	4
35	63−9750	Mount−Rubber	4
36	68−9890	Cover−Gearbox Front	1
37	72−9310	Base−Gearbox	1
39	3211−8	Screw−HH	1
41	99−1297	Idler Socket & Bushing Asm (Incl. Ref. #47 & 56)	1
42	3256−27	Washer−Flat	1
43	3296−33	Nut−Lock	1
44	44−6300	Idler Plate Assembly	1
45	5−1077	Key−Square	1
46	3245−9	Screw−Set	2
47	67−5360	Decal−Danger	3
47	93−7273	Decal−Danger (Europe)	3
48	70−2560	Decal−Lube	1

Ref. No.	Part No.	Description	No. Used
48	93−6697	Decal−Lube (Europe)	1
49	66−1340	Decal−Discharge	2
49	93−7824	Decal−Discharge (Europe)	2
50	92−8761	Decal−Warning	1
50	93−7811	Decal−Warning (Europe)	1
51	43−8480	Decal−Danger	1
51	93−7815	Decal−Danger (Europe)	1
52	68−8340	Decal−Torque	1
52	93−7818	Decal−Torque (Europe)	1
53	66−1630	Decal−62”	1
54	66−6380	Decal−Danger	
54	93−7828	Decal−Danger (Europe)	1
55	74−0340	Cushion−Rubber	2
56	27−8490	Bushing	1
57	99−5172	Decal−Belt Routing	1

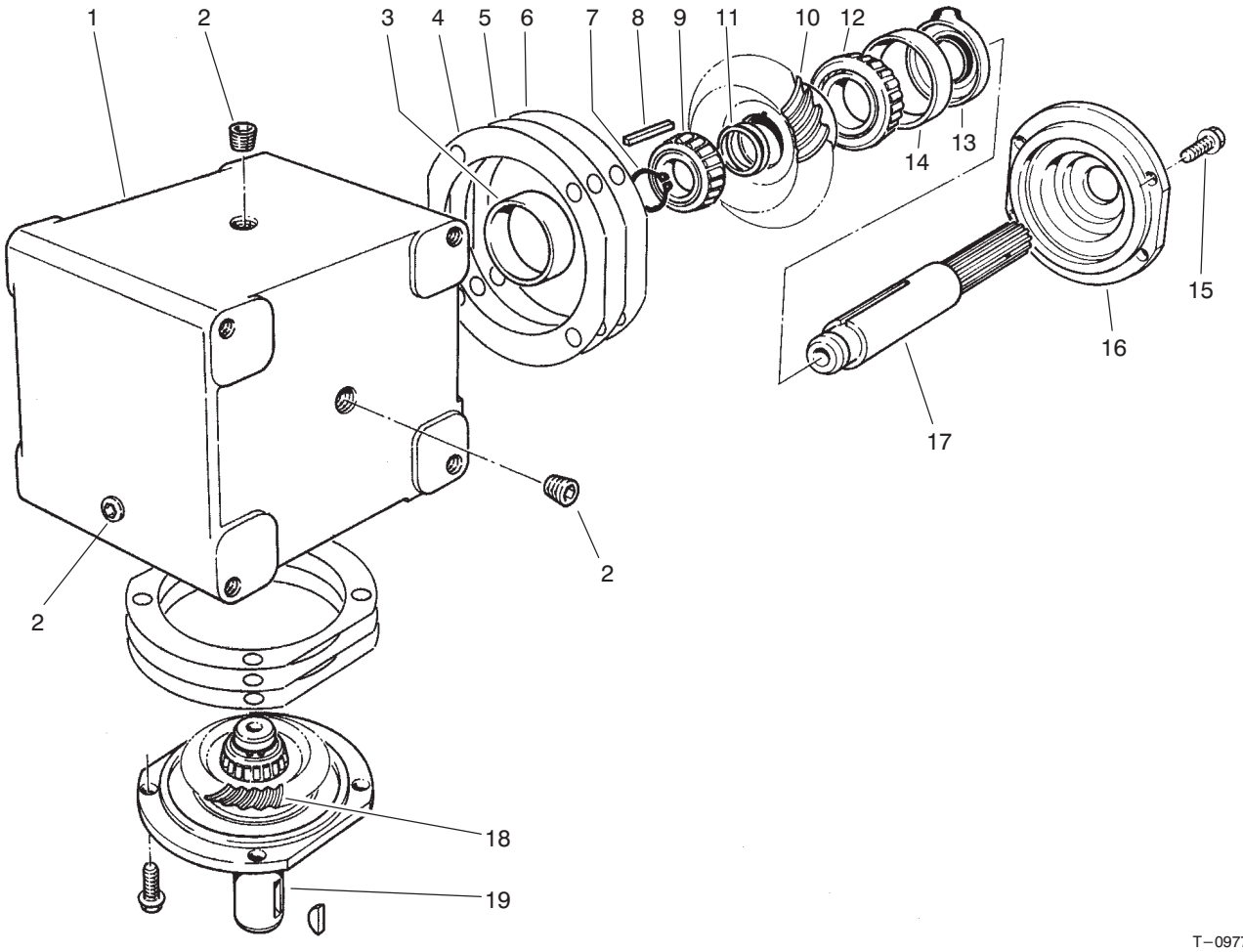

T−0977−2

GEAR BOX ASSEMBLY NO. 68−6810

Ref. No.	Part No.	Description	No. Used
1	68−7030	Housing	1
2	62−3490	Plug−Pipe (Solid)	4
3	62−3360	Cup−Bearing	2
4	62−3420	Gasket (.015 in.)	A/R
5	62−3430	Gasket (.005 in.)	A/R
6	62−3440	Gasket (.003 in.)	A/R
7	68−7070	Ring−Retaining	2
8	62−3380	Key	2
9	62−3370	Cone−Bearing	2
10	68−7080	Gear	1

Ref. No.	Part No.	Description	No. Used
11	72−9370	Shim (.020 in.)	4
12	62−3330	Cone−Gear	1
13	62−3400	Seal	2
14	62−3340	Cup−Bearing	2
15	62−3310	Screw−Cap	8
16	62−3410	Cap	2
17	68−7040	Shaft	1
18	68−7060	Gear	1
19	68−7050	Shaft	1

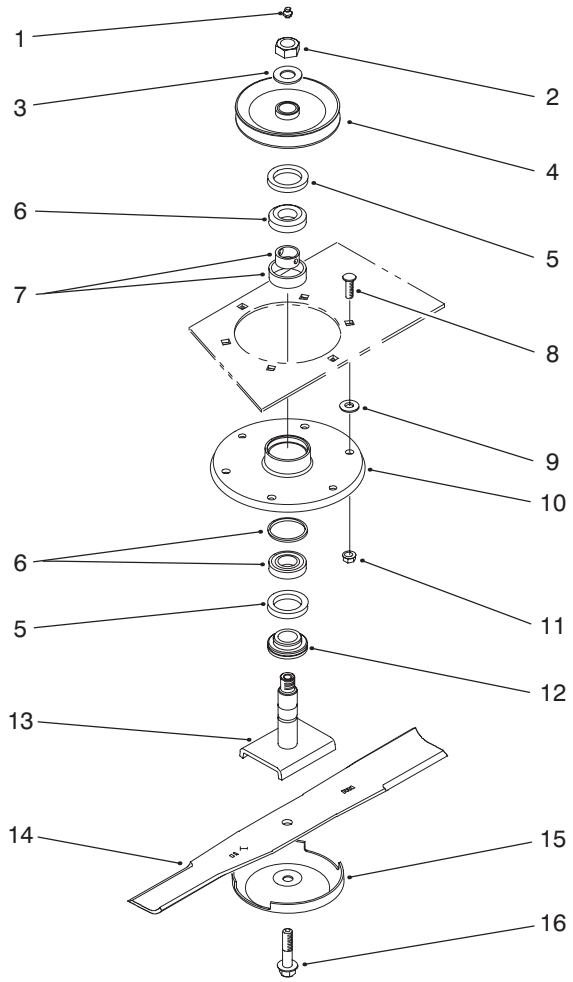

T−3061−1

SPINDLE & BLADE ASSEMBLY

Ref. No.	Part No.	Description	No. Used
1	302−2	Fitting−Grease	3
2	32146−20	Nut−Lock	3
3	7−4150	Washer	3
4	44−6340	Pulley & Hub Assembly	3
5	253−139	Seal−Oil	6
6	27−0960	Bearing Assembly	3
7	27−5970	Spacer−Matched Set	3
8	3231−22	Bolt−Carriage	18

Ref. No.	Part No.	Description	No. Used
9	3256−24	Washer−Flat	A/R
10	61−4160	Spindle	3
11	32128−21	Nut−Lock HFH	18
12	27−0950	Spacer−Bearing, Spindle	3
13	27−0920	Spindle Shaft Assembly	3
14	44−6250	Blade	3
15	72−9360	Cup−Anti Scalp	3
16	92−5816	Screw−Blade	3

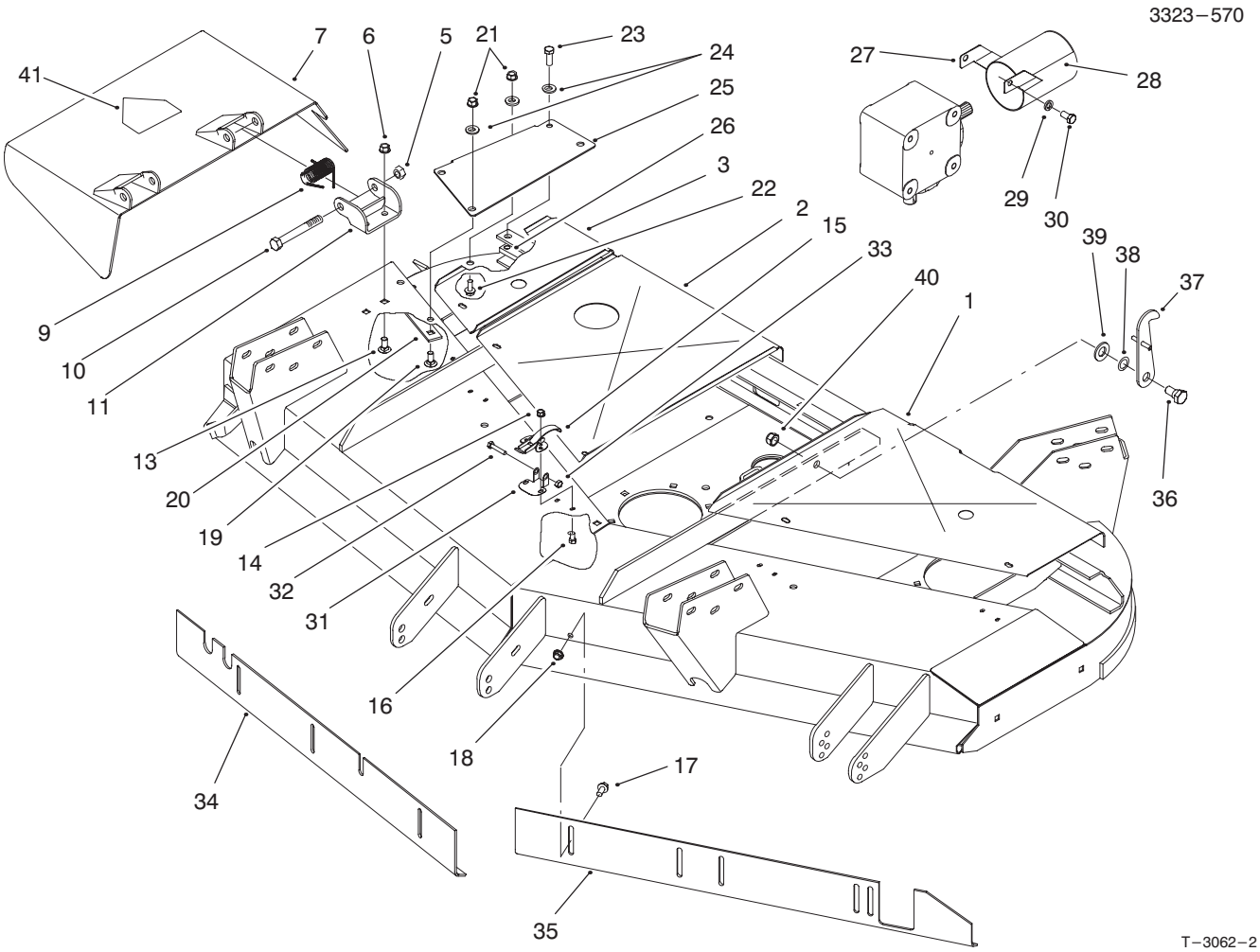

COVERS & DEFLECTOR ASSEMBLY

Ref. No.	Part No.	Description	No. Used
1	99−1294	Cover−Deck, LH	1
2	72−9320	Cover−Deck, Center	1
3	99−5163	Cover−Deck, RH	1
5	32153−5	Nut−Lock	2
6	3290−357	Nut−Flange	4
7	14−0909	Deflector Assembly (Incl. Ref. #41)	1
9	51−1550	Spring	2
10	325−17	Screw−HH	2
11	51−1530	Hinge Bracket Assembly	2
13	3231−27	Screw−Carriage	4
14	32128−17	Nut−Lock	10
15	249−21	Latch−Draw, Slotted	5
16	3290−321	Screw−HH	10
17	3234−5	Screw−HFH	6
18	32128−20	Nut−Lock Flange	6
19	3231−22	Screw−Carriage	2
20	99−5157	Plate−Reinforcement	1
21	3296−39	Nut−Lock NI	4
22	3234−11	Screw−HFH	2
23	323−6	Screw−HH	2

Ref. No.	Part No.	Description	No. Used
24	5−0838	Washer−Flat	6
25	99−5161	Plate−Stiffener	1
26	99−5158	Block−Tapped	1
27	99−8408	Guard−PTO Shaft (Europe) (Incl. Ref. #28)	1
28	93−7283	Decal−Danger (Europe)	1
29	3253−21	Washer−Lock (Europe)	2
30	323−2	Screw−HH (Europe)	2
31	93−7043	Retainer (Europe)	3
32	321−8	Screw−HH (Europe)	3
33	3296−56	Nut−Lock NI (Europe)	3
34	82−8820	Baffle−Front, RH (Europe)	1
35	99−5152	Baffle−Front, LH (Europe)	1
36	62−6080	Bolt−Shoulder (Europe)	2
37	99−5188	Deck Retainer Assembly (Europe)	2
38	3290−317	Washer−Wave (Europe)	2
39	3256−27	Washer−Flat (Europe)	2
40	3296−28	Nut−Lock NI (Europe)	2
41	54−9220	Decal−Danger	1
41	93−7316	Decal−Danger (Europe)	1

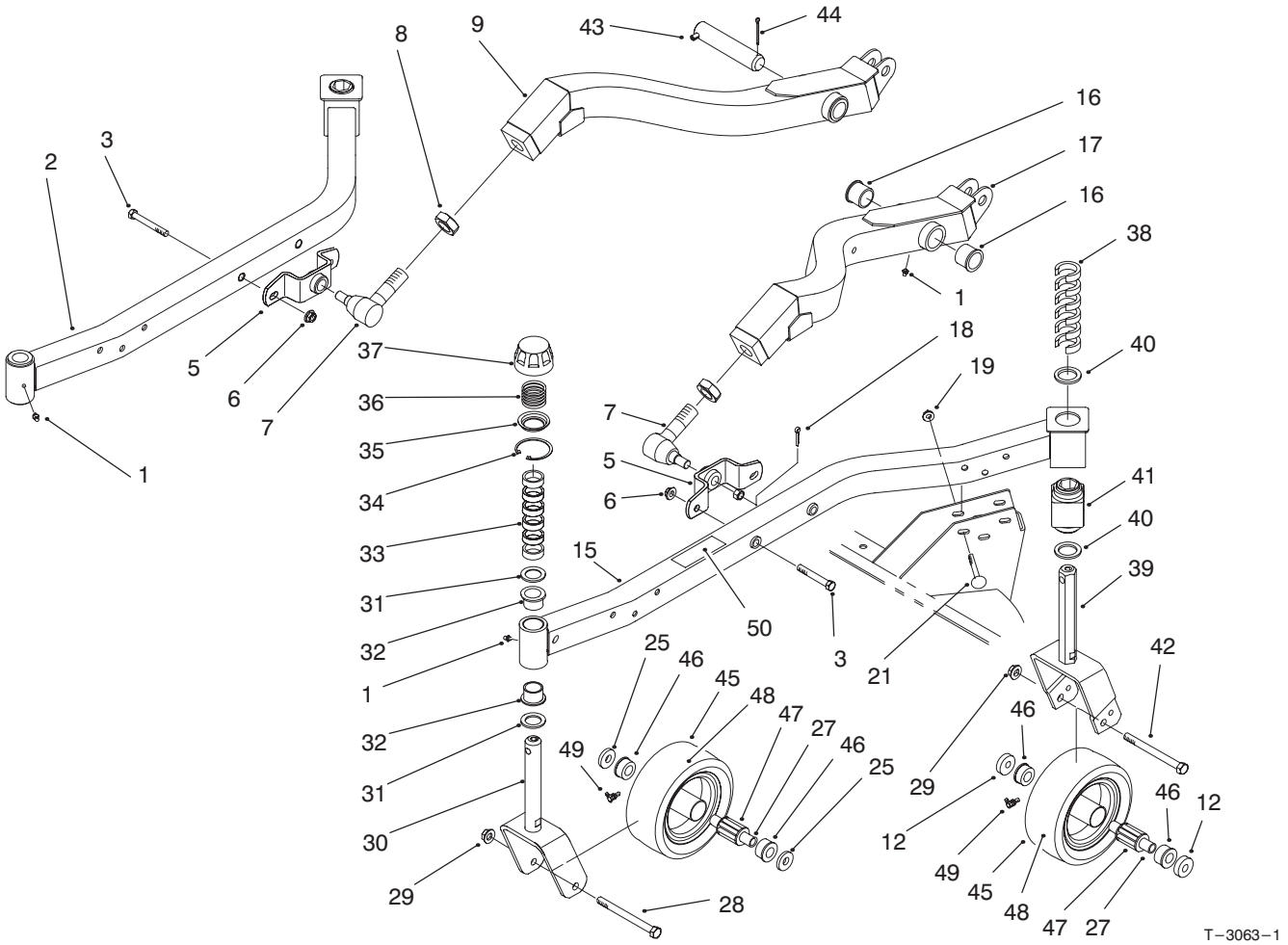

LIFT ARM & CASTOR ARM ASSEMBLY

Ref. No.	Part No.	Description	No. Used
1	302–5	Fitting–Grease	4
2	99–1263	RH Castor Arm Assembly	1
3	324–12	Screw–HH	4
5	98–7944	Mount–Ball Joint	2
6	32128–42	Nut–Lock	4
7	86–8100	Ball Joint	2
8	21–3000	Nut–Jam	2
9	99–1255	RH Lift Arm Assembly	1
12	99–1291	Spacer	4
15	99–1266	LH Castor Arm Assembly	1
16	256–268	Bushing–Flange	4
17	99–1258	LH Lift Arm Assembly	1
18	3272–12	Pin–Cotter	2
19	32128–19	Nut–Hex. Flange	12
21	3231–10	Bolt–Carriage	12
25	70–8040	Washer–Flat	4
27	68–8980	Bushing–Spanner	4
28	325–19	Screw–HH	2
29	32128–23	Nut–Lock, Flange	4
30	98–7921	Castor Fork Assembly	2
31	3–6781	Washer–Thrust	4

Ref. No.	Part No.	Description	No. Used
32	94–1291	Bushing–Special	4
33	63–0070	Spacer	12
34	92–5581	Ring–Retaining, Internal	4
35	92–5583	Washer–Cap	4
36	92–5584	Spring–Compression	4
37	92–8861	Cap–HOC	4
38	92–8866	Spacer	12
39	92–5578	Rear Castor Fork Assembly	2
40	92–1765	Washer–Thrust	4
41	93–8471	Bushing–Square, Rubber	2
42	325–22	Screw–HH	2
43	98–2330	Pivot Pin Assembly	2
44	3272–19	Pin–Cotter	2
45	93–9939	Tire–8”	4
46	62–5580	Bearing–Outside	8
47	62–5570	Bearing–Roller	4
48	68–8950	Tube w/Valve	4
49	302–11	Fitting–Grease	1
50	92–3035	Decal–Low HOC	1
*	99–1268	Wheel & Tire Assembly (Incl. Ref. #45–49)	4

*Not Illustrated

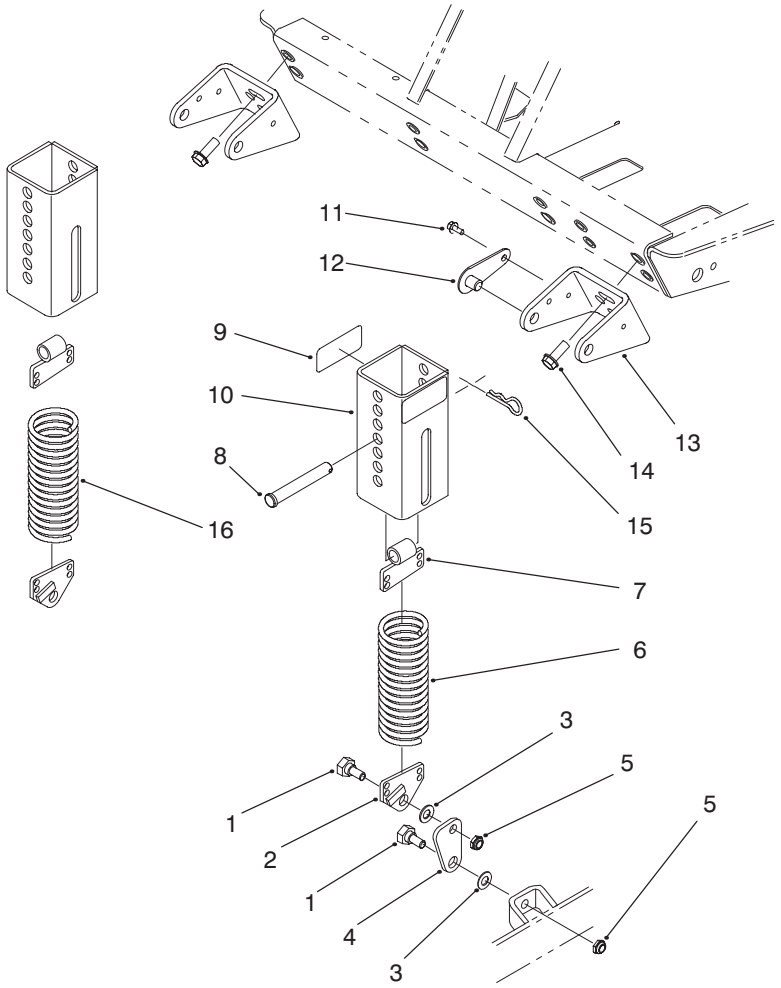

T−3064−1

COUNTERBALANCE ASSEMBLY

Ref. No.	Part No.	Description	No. Used
1	46−3380	Bolt−Shoulder	4
2	66−8420	Spring End Assembly	2
3	3256−24	Washer−Flat	4
4	66−8440	Link	2
5	3296−44	Nut−Lock	4
6	66−8390	Spring−Extension	1
7	99−1298	Spring Cover Assembly (Incl. Ref. #9)	2
8	283−69	Pin−Clevis	2
9	55−4300	Decal−Warning	4
9	93−6696	Decal−Warning (Europe)	4

Ref. No.	Part No.	Description	No. Used
10	70−7970	Spring Cover Assembly	2
11	12−3270	Screw−HH	4
12	70−7920	Lock Pin Assembly	4
13	66−8230	Bracket−Support	2
14	3234−11	Screw−Flange	4
15	3290−355	Pin−Hair	2
16	66−8410	Spring−Extension	1
*	70−8101	Counterbalance Assembly (Incl. Ref. #1−16)	1

*Not Illustrated

TORO PART NUMBER INDEX

Part No.	Description	Pg. No.	Ref. No.	Qty.
3–6781	Washer–Thrust	6	31	4
5–0838	Washer–Flat	5	24	6
5–1077	Key–Square	2	45	1
7–0081	Washer–Special	1	27	2
7–4150	Washer	4	3	3
12–3270	Screw–HH	7	11	4
14–0909	Deflector Assembly	5	7	1
21–3000	Nut–Jam	6	8	2
27–0920	Spindle Shaft Assembly	4	13	3
27–0950	Spacer–Bearing, Spindle	4	12	3
27–0960	Bearing Assembly	4	6	3
27–5970	Spacer–Matched Set	4	7	3
27–6140	Bushing–Taperlock	1	18	1
27–8490	Bushing	2	56	1
36–1740	Roller–Deck	1	22	2
40–0340	Shaft–Roller, Rear	1	20	2
43–8480	Decal–Danger	2	51	1
44–6250	Blade	4	14	3
44–6260	V–Belt	1	7	1
44–6300	Idler Plate Assembly	2	44	1
44–6340	Pulley & Hub Assembly	4	4	3
44–6390	Spacer	1	24	1
46–3380	Bolt–Shoulder	7	1	4
51–1530	Hinge Bracket Assembly	5	11	2
51–1550	Spring	5	9	2
54–9220	Decal–Danger	5	41	1
55–4300	Decal–Warning	7	9	4
61–4160	Spindle	4	10	3
62–3310	Screw–Cap	3	15	8
62–3330	Cone–Gear	3	12	1
62–3340	Cup–Bearing	3	14	2
62–3360	Cup–Bearing	3	3	2
62–3370	Cone–Bearing	3	9	2
62–3380	Key	3	8	2
62–3400	Seal	3	13	2
62–3410	Cap	3	16	2
62–3420	Gasket (.015 in.)	3	4	A/R
62–3430	Gasket (.005 in.)	3	5	A/R
62–3440	Gasket (.003 in.)	3	6	A/R
62–3490	Plug–Pipe (Solid)	3	2	4
62–5570	Bearing–Roller	6	47	4
62–5580	Bearing–Outside	6	46	8
62–6080	Bolt–Shoulder(Europe)	5	36	2
63–0070	Spacer	6	33	12
63–8410	Washer–Flat	2	34	4
63–9750	Mount–Rubber	2	35	4
63–9900	Pulley Assembly–Gearbox	1	19	1
65–5940	Bushing–Pulley	1	26	2
65–5950	Bushing–Pulley	1	25	2
66–1340	Decal–Discharge	2	49	2
66–1630	Decal–62	2	53	1
66–6380	Decal–Danger	2	54	
66–8230	Bracket–Support	7	13	2
66–8390	Spring–Extension	7	6	1
66–8410	Spring–Extension	7	16	1
66–8420	Spring End Assembly	7	2	2
66–8440	Link	7	4	2
67–5360	Decal–Danger	2	47	3
68–2730	Wheel–Gage	1	3	1
68–6710	Roller–Deck	1	9	1
68–6810	Gearbox	1	32	1
68–6840	Shaft–Roller	1	11	1
68–7030	Housing	3	1	1
68–7040	Shaft	3	17	1
68–7050	Shaft	3	19	1
68–7060	Gear	3	18	1
68–7070	Ring–Retaining	3	7	2
68–7080	Gear	3	10	1
68–8340	Decal–Torque	2	52	1
68–8560	Gearbox Bracket Assembly	1	30	2
68–8950	Tube w/Valve	6	48	4
68–8980	Bushing–Spanner	6	27	4
68–9890	Cover–Gearbox Front	2	36	1
70–2560	Decal–Lube	2	48	1
70–7920	Lock Pin Assembly	7	12	4
70–7970	Spring Cover Assembly	7	10	2
70–8040	Washer–Flat	6	25	4
70–8101	Counterbalance Assembly	7	*	1
72–9310	Base–Gearbox	2	37	1
72–9320	Cover–Deck, Center	5	2	1
72–9360	Cup–Anti Scalp	4	15	3
72–9370	Shim (.020 in.)	3	11	4
74–0340	Cushion–Rubber	2	55	2
82–8820	Baffle–Front, RH (Europe)	5	34	1
86–8100	Ball Joint	6	7	2
92–1765	Washer–Thrust	6	40	4
92–3035	Decal–Low HOC	6	50	1
92–5578	Rear Castor Fork Assembly	6	39	2
92–5581	Ring–Retaining, Internal	6	34	4
92–5583	Washer–Cap	6	35	4
92–5584	Spring–Compression	6	36	4
92–5816	Screw–Blade	4	16	3
92–8761	Decal–Warning	2	50	1
92–8861	Cap–HOC	6	37	4
92–8866	Spacer	6	38	12
93–6696	Decal–Warning (Europe)	7	9	4
93–6697	Decal–Lube (Europe)	2	48	1
93–7043	Retainer (Europe)	5	31	3
93–7273	Decal–Danger (Europe)	2	47	3
93–7283	Decal–Danger (Europe)	5	28	1
93–7316	Decal–Danger (Europe)	5	41	1
93–7811	Decal–Warning (Europe)	2	50	1
93–7815	Decal–Danger (Europe)	2	51	1
93–7818	Decal–Torque (Europe)	2	52	1
93–7824	Decal–Discharge (Europe)	2	49	2
93–7828	Decal–Danger (Europe)	2	54	1
93–8471	Bushing–Square, Rubber	6	41	2
93–9939	Tire–8	6	45	4
94–1291	Bushing–Special	6	32	4
98–2330	Pivot Pin Assembly	6	43	2
98–7912	Spanner	1	4	1
98–7913	Spacer	1	5	1
98–7921	Castor Fork Assembly	6	30	2
98–7944	Mount–Ball Joint	6	5	2
99–1252	Skid Assembly	1	16	1
99–1255	RH Lift Arm Assembly	6	9	1
99–1258	LH Lift Arm Assembly	6	17	1
99–1263	RH Castor Arm Assembly	6	2	1
99–1266	LH Castor Arm Assembly	6	15	1
99–1268	Wheel & Tire Assembly	6	*	4
99–1287	Deck Assembly	1	1	1
99–1291	Spacer	6	12	4
99–1294	Cover–Deck, LH	5	1	1
99–1297	Idler Socket & Bushing Asm	2	41	1
99–1298	Spring Cover Assembly	7	7	2
99–5152	Baffle–Front, LH (Europe)	5	35	1
99–5157	Plate–Reinforcement	5	20	1
99–5158	Block–Tapped	5	26	1
99–5161	Plate–Stiffener	5	25	1
99–5163	Cover–Deck, RH	5	3	1

*Not Illustrated

TORO PART NUMBER INDEX (Cont.)

Part No.	Description	Pg. No.	Ref. No.	Qty.
99–5172	Decal–Belt Routing	2	57	1
99–5188	Deck Retainer Assembly	5	37	2
99–8408	Guard–PTO Shaft (Europe)	5	27	1
249–21	Latch–Draw, Slotted	5	15	5
253–139	Seal–Oil	4	5	6
256–268	Bushing–Flange	6	16	4
283–69	Pin–Clevis	7	8	2
302–2	Fitting–Grease	4	1	3
302–5	Fitting–Grease	6	1	4
302–11	Fitting–Grease	6	49	1
321–8	Screw–HH (Europe)	5	32	3
323–2	Screw–HH (Europe)	5	30	2
323–4	Screw–HH	1	14	6
323–6	Screw–HH	5	23	2
323–23	Screw–HH	1	6	1
324–12	Screw–HH	6	3	4
325–17	Screw–HH	5	10	2
325–19	Screw–HH	6	28	2
325–22	Screw–HH	6	42	2
3211–8	Screw–HH	2	39	1
3211–9	Screw–HH	1	17	1
3231–10	Bolt–Carriage	6	21	12
3231–22	Bolt–Carriage	4	8	18
3231–22	Bolt–Carriage	1	15	2
3231–22	Screw–Carriage	5	19	2
3231–26	Bolt–Carriage	1	23	4
3231–27	Screw–Carriage	1	10	4
3231–27	Screw–Carriage	5	13	4
3234–5	Screw–HFH	5	17	6
3234–11	Screw–Flange	7	14	4
3234–11	Screw–HFH	5	22	2
3234–11	Screw–HHF	1	12	1
3245–9	Screw–Set	2	46	2
3253–21	Washer–Lock	1	29	4
3253–21	Washer–Lock (Europe)	5	29	2
3256–24	Washer–Flat	7	3	4
3256–24	Washer–Flat	4	9	A/R
3256–27	Washer–Flat	2	42	1
3256–27	Washer–Flat (Europe)	5	39	2
3257–5	Key–Woodruff	1	31	1
3272–11	Pin–Cotter	1	21	2
3272–12	Pin–Cotter	6	18	2
3272–19	Pin–Cotter	6	44	2
3290–317	Washer–Wave (Europe)	5	38	2
3290–321	Screw–HH	5	16	10
3290–355	Pin–Hair	7	15	2
3290–357	Nut–Flange	5	6	4
3290–357	Nut–Flange	1	13	8
3296–5	Nut–Lock	1	28	2
3296–28	Nut–Lock NI (Europe)	5	40	2
3296–33	Nut–Lock	2	43	1
3296–39	Nut–Lock NI	5	21	4
3296–44	Nut–Lock	7	5	4
3296–56	Nut–Lock NI (Europe)	5	33	3
32128–17	Nut–Lock	5	14	10
32128–19	Nut–Hex. Flange	1	2	4
32128–19	Nut–Hex. Flange	6	19	12
32128–20	Nut–Lock Flange	5	18	6
32128–21	Nut–Lock HFH	4	11	18
32128–23	Nut–Lock, Flange	6	29	4
32128–42	Nut–Lock	6	6	4
32146–20	Nut–Lock	4	2	3
32153–2	Nut–Lock	1	33	4
32153–5	Nut–Lock	5	5	2

*Not Illustrated

PRODUCT CHANGES

In an effort to make improvements available to TORO owners as quickly as possible, minor changes are incorporated into Toro's products from time to time that do not become immediately shown in the Parts Catalog. If such a change has been made in your unit, which is not reflected in your manual, see your TORO Distributor or his Authorized TORO Service Dealer for information and part numbers.

IDENTIFICATION AND ORDERING

MODEL AND SERIAL NUMBERS

The 62" Side Discharge Deck has two identification numbers; a model number and a serial number. The two numbers are stamped on a plate which is located on the left rear of the deck. In any correspondence concerning the 62" Side Discharge Deck, supply model and serial numbers to assure that correct information and replacement parts are obtained.

To order replacement parts from an Authorized TORO Service Dealer, supply the following information:

1. Model and serial number of the 62" Side Discharge Deck.
2. Part number, description, and the quantity of part(s) desired.

NOTE: Do not order by reference number if a parts catalog is being used; use the PART NUMBER.

TABLE OF CONTENTS

Description	Page	Description	Page
Roller & Drive Assembly	1–2	Lift Arm & Castor Arm Assembly	6
Gear Box Assembly No. 68–6810	3	Counterbalance Assembly	7
Spindle & Blade Assembly	4	TORO Part Number Index	8–9
Covers & Deflector Assembly	5		

MAINTENANCE RECORD

Date								

MAINTENANCE RECORD

Date								