FORM NO. 3323-578

TORO®

MODEL NO. 30551—90001 & UP

OPERATOR'S MANUAL

62" SIDE DISCHARGE CUTTING DECK



© The Toro Company—2000

Forword

The 62” cutting deck has advanced concepts in engineering, design and safety; and if maintained properly, will give excellent service.



Certain information in this manual is emphasized. DANGER, WARNING and CAUTION identify personal safety related information. IMPORTANT identifies mechanical information demanding special attention. Be sure to read this directive because it deals with the possibility of damaging a part or parts of the machine. NOTE identifies general information worthy of special attention.

Table of Contents

Forword 2

Table of Contents 2

Safety 3

Symbol Glossary 6

Specifications 9

Adjusting Height-of-Cut 10

Before Operating 10
- Adjusting the Rollers & Gage Wheel 11
- Check the Lubricant in the Gear Box 11

Operating Instructions 13
- Grass Deflector 13
- Tension Spring Adjustment 13

Maintenance 14
- Grease Bearings, Bushings and Gear Box 14
- Troubleshooting 15
- Separating the Cutting Unit from the Traction Unit 16
- Mounting the Cutting Unit to the Traction Unit 16
- Servicing Castor Arm Bushings 17
- Servicing the Castor Wheels and Bearings 17
- Checking for a Bent Blade 18
- Replacing the Cutter Blade 18
- Checking the Sail and Sharpening the Cutter Blade 19
- Correcting Cutting Unit Mismatch 20
- Replacing the Grass Deflector 21
- Adjusting the Idler Pulley 21
- Adjusting Cover Latches 22
- Replacing the Drive Belt 22
- Model and Serial Numbers 23

Safety

Training

1. Read the instructions carefully. Be familiar with the controls and the proper use of the equipment.

2. Never allow children or people unfamiliar with these instructions to use the lawnmower. Local regulations may restrict the age of the operator.

3. Never mow while people, especially children, or pets are nearby.

4. Keep in mind that the operator or user is responsible for accidents or hazards occurring to other people or their property.

5. Do not carry passengers.

6. All drivers should seek and obtain professional and practical instruction. Such instruction should emphasize:
   - the need for care and concentration when working with ride-on machines;
   - control of a ride on machine sliding on a slope will not be regained by the application of the brake. The main reasons for loss of control are:
     – insufficient wheel grip;
     – being driven too fast;
     – inadequate braking;
     – the type of machine is unsuitable for its task;
     – lack of awareness of the effects of ground conditions, especially slopes;

Preparation

1. While mowing, always wear substantial footwear and long trousers. Do not operate the equipment when barefoot or wearing open sandals.

2. Thoroughly inspect the area where the equipment is to be used and remove all objects which may be thrown by the machine.

3. **WARNING—Petrol is highly flammable.**
   - Store fuel in containers specifically designed for this purpose.
   - Refuel outdoors only and do not smoke while refueling.
   - Add fuel before starting the engine. Never remove the cap of the fuel tank or add petrol while the engine is running or when the engine is hot.
   - If petrol is spilled, do not attempt to start the engine but move the machine away from the are of spillage and avoid creating any source of ignition until petrol vapors have dissipated.
   - Replace all fuel tanks and container caps securely.

4. Replace faulty silencers.

5. Before using, always visually inspect to see that the blades, blade bolts and cutter assembly are not worn or damaged. Replace worn or damaged blades and bolts in sets to preserve balance.

6. On multi-bladed machines, take care as rotating one blade can cause other blades to rotate.

Operation

1. Do not operate the engine in a confined space where dangerous carbon monoxide fumes can collect.

2. Mow only in daylight or in good artificial light.

3. Before attempting to start the engine, disengage all blade attachment clutches and shift into neutral.

4. Do not use on slopes of more than:
   - Never mow side hills over 5°
   - Never mow uphill over 10°
   - Never mow downhill over 15°

5. Remember there is no such thing as a “safe”

slope. Travel on grass slopes requires particular care. To guard against overturning:

- do not stop or start suddenly when going up or downhill;
- engage clutch slowly, always keep machine in gear, especially when travailing downhill;
- machine speeds should be kept low on slopes and during tight turns;
- stay alert for bumps and hollows and other hidden hazards;
- never mow across the face of the slope, unless the lawnmower is designed for this purpose.

6. Use care when pulling loads or using heavy equipment.

- Use only approved drawbar hitch points.
- Limit loads to those you can safely control.
- Do not turn sharply. Use care when reversing.
- Use counterweight(s) or wheel weights when suggested in the instruction handbook .

7. Watch out for traffic when crossing or near roadways.

8. Stop the blades rotating before crossing surfaces other than grass.

9. When using any attachments, never direct discharge of material toward bystanders nor allow anyone near the machine while in operation .

10. Never operate the lawnmower with defective guards, shields or without safety protective devices in place.

11. Do not change the engine governor settings or overspeed the engine. Operating the engine at excessive speeds may increase the hazard of personal injury.

12. Before leaving the operator's position:

- disengage the power take-off and lower the attachments;
- change into neutral and set the parking brake;
- stop the engine and remove the key.

13. Disengage drive to attachments, stop the engine, and disconnect the spark plug wire(s)or remove the ignition key

- before cleaning blockages or unclogging chute;
- before checking, cleaning or working on the lawnmower;
- after striking a foreign object. Inspect the lawnmower for damage and make repairs before restarting and operating the equipment;
- if the machine starts to vibrate abnormally (check immediately).

14. Disengage drive to attachments when transporting or not in use.

15. Stop the engine and disengage drive to attachment

- before refueling;
- before removing the grass catcher;
- before making height adjustment unless adjustment can be made from the operator's position.

16. Reduce the throttle setting during engine runout and, if the engine is provided with a shutoff valve, turn the fuel off at the conclusion of mowing.

Maintenance and Storage

1. Keep all nuts, bolts and screws tight to be sure the equipment is in safe working condition.

2. Never store the equipment with petrol in the tank inside a building where fumes may reach an open flame or spark.

3. Allow the engine to cool before storing in any enclosure.

4. To reduce the fire hazard, keep the engine, silencer, battery compartment and petrol storage area free of grass, leaves, or excessive grease.

5. Check the grass catcher frequently for wear or deterioration.

6. Replace worn or damaged parts for safety.

7. If the fuel tank has to be drained, this should be done outdoors

8. On multi-bladed machines, take care as rotating one blade can cause other blades to rotate.

9. When machine is to be parked, stored or left unattended, lower the cutting means unless a positive mechanical lock is used.

Symbol Glossary

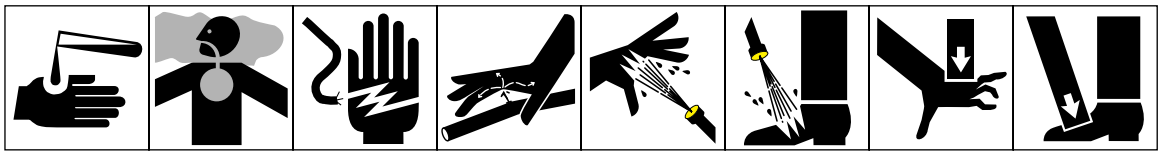

Caustic liquids, chemical burns to fingers or hand | Poisonous fumes or toxic gases, asphyxiation | Electrical shock, electrocution | High pressure fluid, injection into body | High pressure spray, erosion of flesh | High pressure spray, erosion of flesh | Crushing of fingers or hand, force applied from above | Crushing of toes or foot, force applied from above

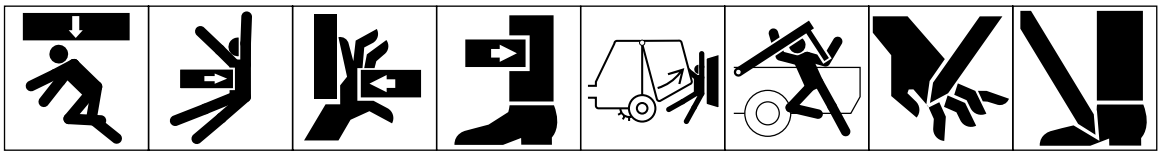

Crushing of whole body, applied from above | Crushing of torso, force applied from side | Crushing of fingers or hand, force applied from side | Crushing of leg, force applied from side | Crushing of whole body | Crushing of head, torso and arms | Cutting of fingers or hand | Cutting of foot

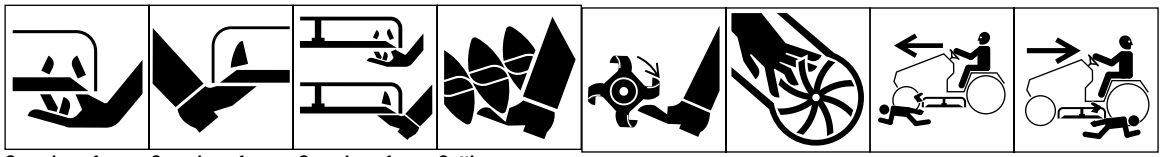

Severing of fingers or hand, mower blade | Severing of toes or foot, mower blade | Severing of toes or fingers, rotary mower blade | Cutting or entanglement of foot, rotating auger | Severing of foot, rotating knives | Severing of fingers or hand, impeller blade | Dismember-ment, front engine mower in forward motion | Dismember-ment, front engine mower in rearward motion

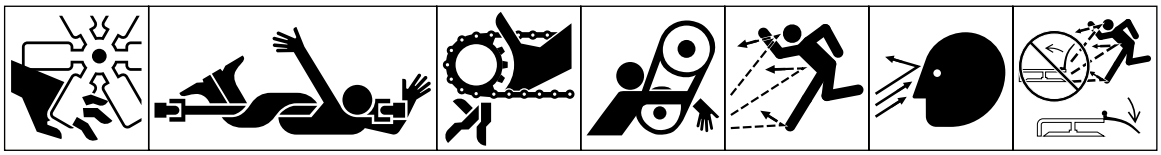

Severing of fingers or hand, engine fan | Whole body entanglement, implement input drive line | Fingers or hand entangle-ment, chain drive | Hand & arm entanglement, belt drive | Thrown or flying objects, whole body exposure | Thrown or flying objects, face exposure | Thrown or flying objects, rotary mover

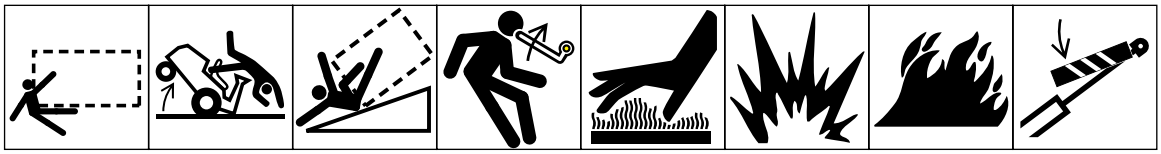

Runover/back-over, vehicle | Machine tipping, riding mower | Machine rollover, ROPS (rear engine mower) | Stored energy hazard, kickback or upward motion | Hot surfaces, burns to fingers or hands | Explosion | Fire or open flame | Secure lifting cylinder with locking device before getting in hazardous area

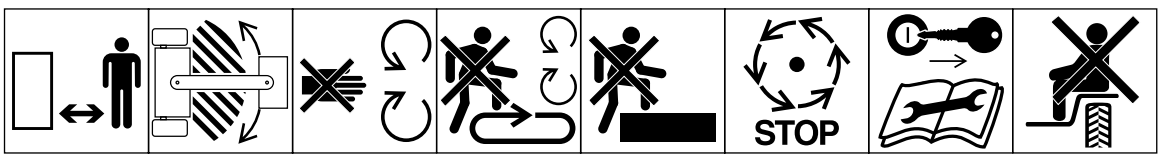

Stay a safe distance from the machine | Stay clear of articulation area while engine is running | Do not open or remove safety shields while engine is running | Do not step on loading platform if PTO is connect-ed to tractor & engine is running | Do not step | Wait until all machine comp-onents have completely stopped before touching them | Shut off engine & remove key before perform-ing maintenance or repair work | Riding on this machine is allowed only on a passen-ger seat & only if the driver's view is not hindered

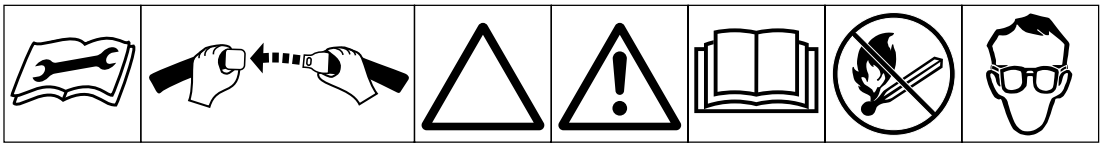

Consult technical manual for proper service procedures | Fasten seat belts | Safety alert triangle | Outline safety alert symbol | Read operator's manual | Fire, open light and smoking prohibited | Eye protection must be worn

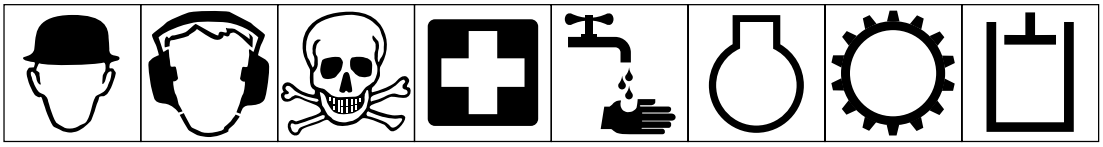

Head protection must be worn | Hearing protection must be worn | Caution, toxic risk | First aid | Flush with water | Engine | Transmission | Hydraulic system

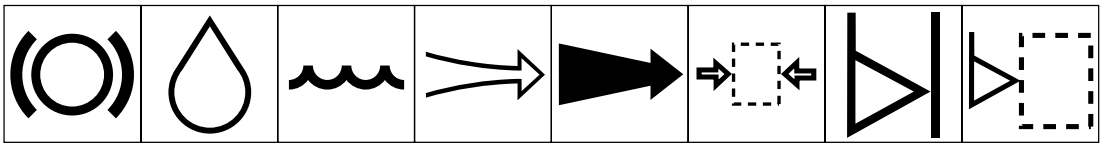

Brake system | Oil | Coolant (water) | Intake air | Exhaust gas | Pressure | Level indicator | Liquid level

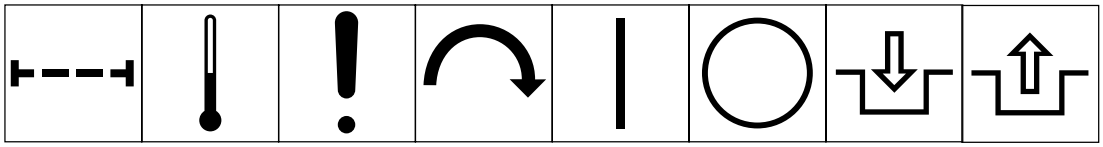

Filter | Temperature | Failure/ Malfunction | Start switch/ mechanism | On/start | Off/stop | Engage | Disengage

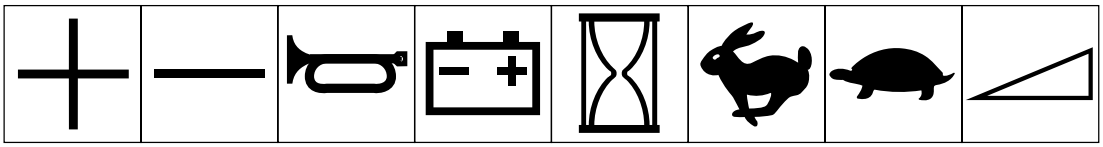

Plus/increase/ positive polarity | Minus/decrease/ negative polarity | Horn | Battery charging condition | Hourmeter/ elapsed operating hours | Fast | Slow | Continuous variable, linear

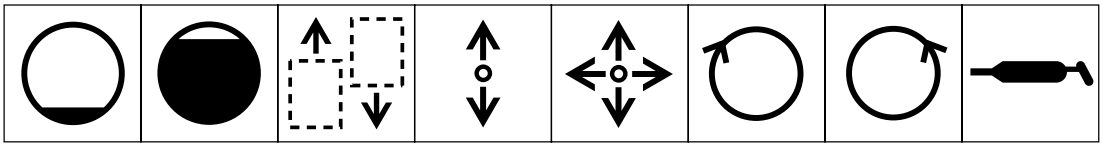

Volume empty | Volume full | Machine travel direction, forward/ rearward | Control lever operating direction, dual direction | Control lever operating direction, multiple direction | Clockwise rotation | Counter-clock-wise rotation | Grease lubrication point

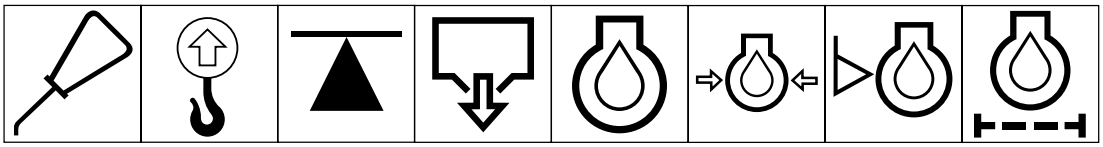

Oil lubrication point | Lift point | Jack or support point | Draining/ emptying | Engine lubricat-ing oil | Engine lubricating oil pressure | Engine lubricating oil level | Engine lubricating oil filter

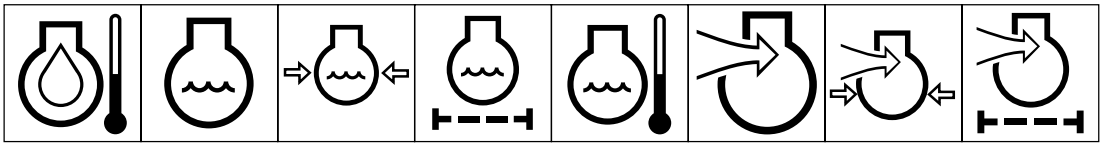

Engine lubricating oil temperature | Engine coolant | Engine coolant pressure | Engine coolant filter | Engine coolant temperature | Engine intake/ combustion air | Engine intake/com-bustion air pressure | Engine intake/air filter

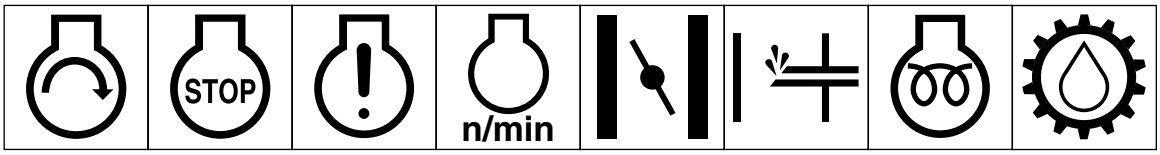

Engine start | Engine stop | Engine failure/ malfunction | Engine rotational speed/frequency | Choke | Primer (start aid) | Electrical preheat (low temperature start aid) | Transmission oil

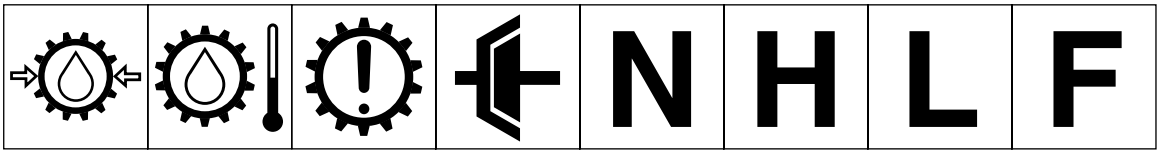

Transmission oil pressure | Transmission oil temperature | Transmission failure/malfunction | Clutch | Neutral | High | Low | Forward

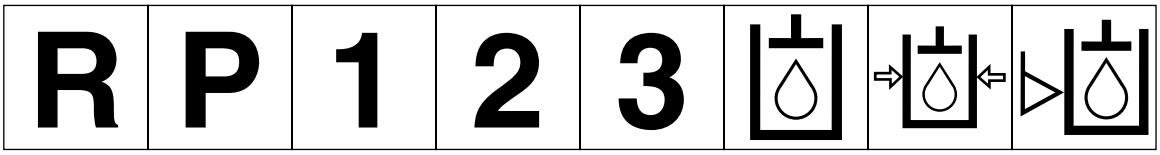

Reverse | Park | First gear | Second gear | Third gear (other #'s may be used until the maximum # of forward gears is reached.) | Hydraulic oil | Hydraulic oil pressure | Hydraulic oil level

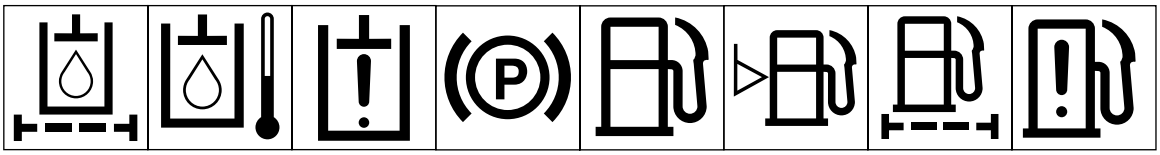

Hydraulic oil filter | Hydraulic oil temperature | Hydraulic oil failure/malfunction | Parking brake | Fuel | Fuel level | Fuel filter | Fuel system failure/malfunction

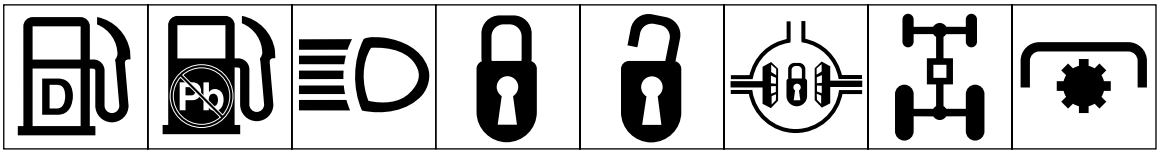

Diesel fuel | Unleaded fuel | Headlights | Lock | Unlock | Differential lock | 4-Wheel drive | Power Take-Off

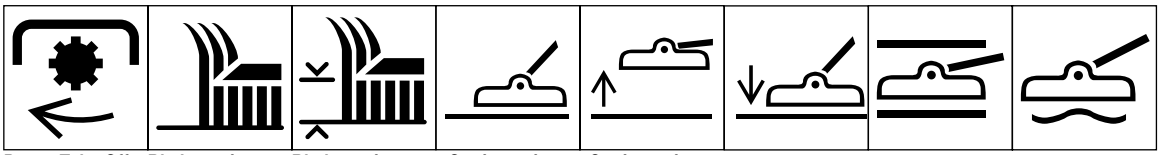

Power Take-Off, rotational speed | Blade cutting element | Blade cutting element, height adjustment | Cutting unit | Cutting unit, raise | Cutting unit, lower | Cutting unit, hold | Cutting unit, float

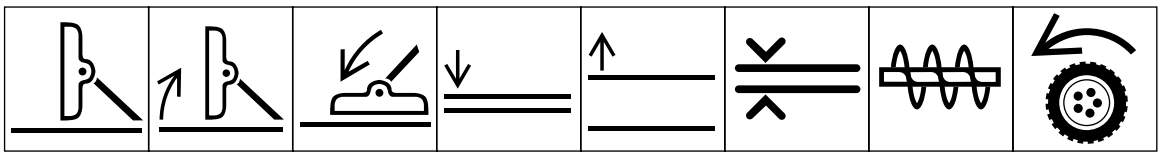

Cutting unit, transport position | Cutting unit, raise to transport position | Cutting unit, lower to transport position | Attachment lower | Attachment raise | Spacing distance | Snow thrower, collector auger | Traction

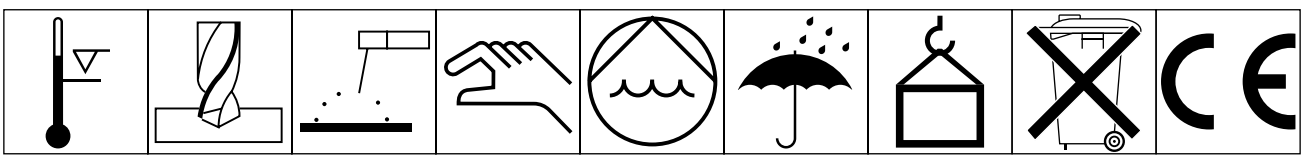

Above working temperature range | Drilling | Manual metal arc welding | Manual | Water pump | Keep dry | Weight | Do not dispose in the garbage | CE logo

Specifications

Width of Cut: 1.56 m.

Height of Cut: Adjustable from 25 to 102 mm) in 13 mm increments.

Blade Tip Speed: 4,718 m/min. @ 3250 engine rpm.

Cutter Blades: Three heat-treated steel blades, each 4.8 mm thick and 55 mm long.

Unit Drive System: PTO-driven gear box transmits power through a “AA” section belt to all blade spindles.

Castor Wheels:

Front—203 mm diameter pneumatic wheels with greaseable roller bearings. (Inflation 207–345 kPa)

Rear—152 mm diameter hard rubber wheels with greaseable roller bearings.

Optional Equipment:

62” Front Baffle Kit: Part No. 99-5151 (For Dry Conditions)

Leaf Mulcher: Model 30792

Leaf Mulcher Discharge Plate: Part No. 57-0700

High Lift Blades: Part No. 77-6710

Grass Collection System: Model 30506 Blower Kit used with Model 30504 Hopper Kit or Model 30505 Dump Kit.

Note: Model 30505 only fits Models 30223, 30224, 30225,30230 and 30243. Model 30504 only fits; Models 30223, 30230 and 30225.

Phenolic Caster Wheels: Part No. 27-1050 use with Spanner Part No. 69-8980 or order Part No. 40-0370 Caster Fork and 3/4” bolts Part No. 328-9.

Before Operating

Adjusting Height-of-Cut

The height of cut is adjustable from 2.5 to 10 cm in 1.25-cm increments, by adding or removing an equal number of spacers from the front and rear castor forks. The height-of-cut chart below gives the combinations of spacers to use for all height-of-cut settings.

Height-of-Cut Chart

Height-of-Cut Setting	Spacers Below Castor Arm	
	Front	Rear
2.5 cm	0	0
3.7 cm	1	1
5.0 cm	2	2
6,3 cm	3	3
7.5 cm	4	4
8.7 cm	5	5
10.0 cm	6	6

Start the engine and raise the cutting unit so the height of cut can be changed. Stop the engine after raising the cutting unit.

Front Castor Wheels

1. Remove the tensioning cap from the spindle shaft and slide the spindle out of the front castor arm. Remove the washer from the spindle shaft. Slide spacers onto the spindle shaft to get desired height of cut, then slide a washer onto the shaft.

2. Push castor spindle through front castor arm, install other thrust washer and remaining spacers onto spindle and install tensioning cap to secure assembly.

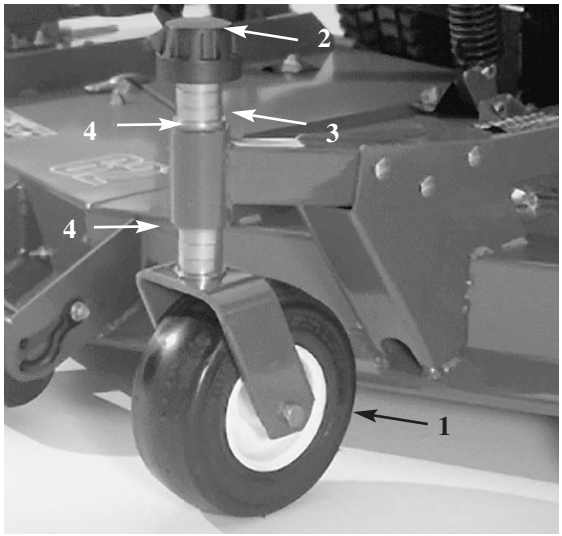

Figure 1

1. Front castor wheel
2. Tensioning cap
3. Spacers
4. Thrust washers

Rear Castor Wheels

1. Remove the tensioning cap from the spindle shaft.

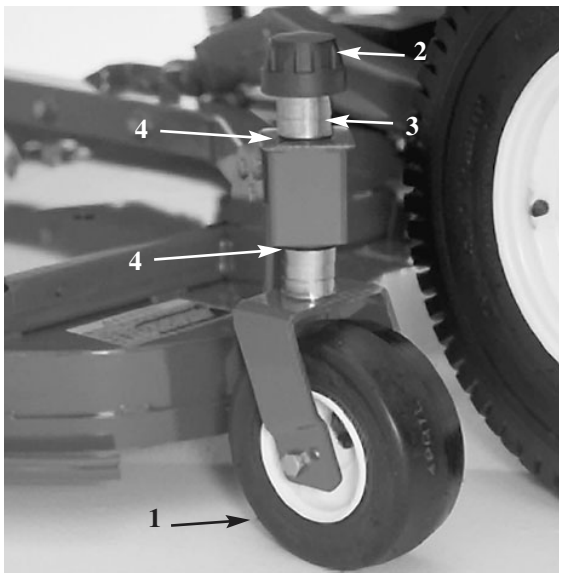

Figure 2

1. Rear castor wheel
2. Tensioning cap
3. Spacers
4. Thrust washers

Note: The rear castor fork assembly does not need to be removed from castor arm to change height of cut.

2. Remove or add “C”-shaped spacers at the narrow portion of the spindle shaft, below the castor arm, to get desired height of cut. Make sure thrust washers—not the spacers—contact the top and bottom of the castor arm.

3. Install the tensioning cap.

4. Assure all four castor wheels are set at same height of cut.

Adjusting the Rollers & Gage Wheel

Note: If the cutting unit is to be used in the 2.5- or 3.75 cm height-of-cut setting, cutting unit rollers must be repositioned in the top bracket holes.

To adjust front roller (Fig. 3):

1. Remove the capscrew and nut securing the roller shaft to the cutting unit bracket (Fig. 3).

2. Slide the shaft out of the lower bracket holes, align the roller with the top holes and install the shaft.

3. Secure the roller shaft to the cutting unit bracket with a capscrew and nut.

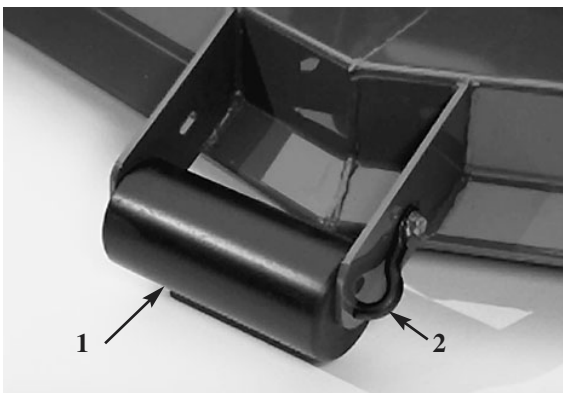

Figure 3

1. External roller
2. Roller shaft

To adjust the front gage wheel (Fig. 4):

1. Remove the capscrew and nut securing the gage wheel to the cutting unit brackets.

2. Align the roller and spacer with the top holes in the brackets and secure with a capscrew and nut.

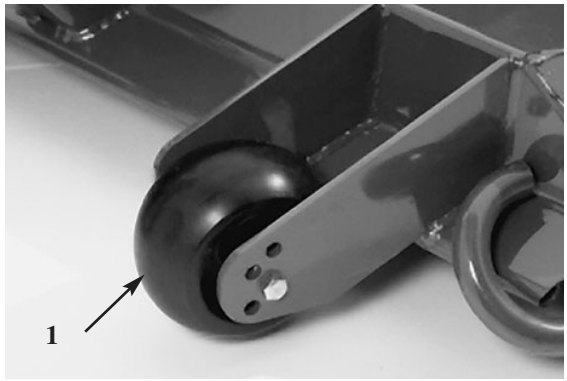

Figure 4

1. Gage wheel

To adjust the rear (internal) rollers (Fig. 5):

1. Remove the cotter pins securing the roller shafts to the brackets on the underside of the deck.

2. Slide the shafts out of the lower bracket holes, align the rollers with the top holes and install the shafts.

3. Install cotter pins to secure the assemblies.

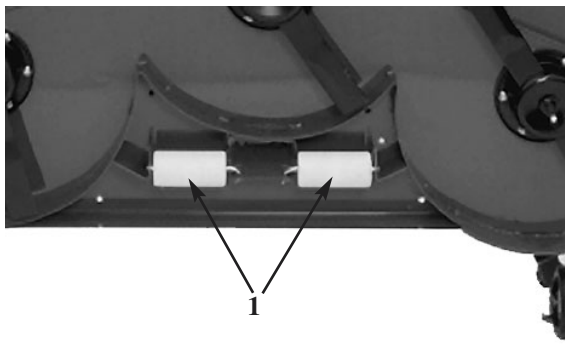

Figure 5

1. Internal rollers

Check the Lubricant in the Gear Box

The gearbox is designed to operate on SAE 80-90 wt. gear lube. Although the gear box is shipped with lubricant from the factory, check the level before

operating the cutting unit.

1. Position the machine and cutting unit on a level surface.

2. Remove the check plug from the side of the gear box and make sure lubricant is up to bottom of the hole (Fig. 6). If the level of lubricant is low, remove the fill plug on top of the gear case and add enough lubricant to bring it up to bottom of the hole in the side.

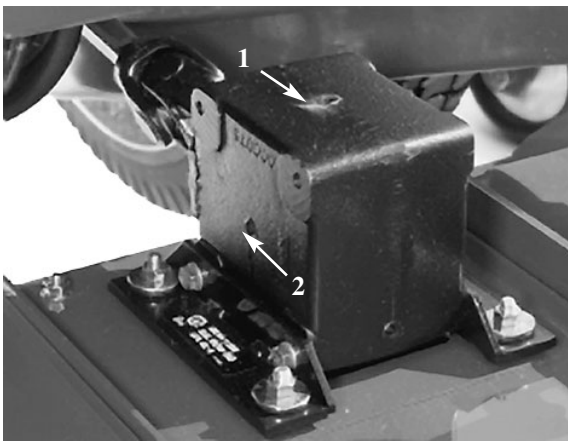

Figure 6

1. Filler plug
2. Check plug

Operating Instructions

Grass Deflector (Fig 7)

WARNING

The grass deflector is a safety device that diverts grass and other foreign objects being discharged downward. WE STRONGLY RECOMMEND THAT THE DEFLECTOR BE IN ITS NORMAL OPERATING POSITION WHENEVER THE CUTTING UNIT IS ENGAGED. NEVER OPERATE THE CUTTING UNIT WITH THE DEFLECTOR REMOVED FROM THE CUTTING UNIT OR WITH IT ITED/BLOCKED IN A RAISED POSITION. IF YOU DO, THE BLADES COULD THEN THROW DEBRIS A CONSIDERABLE DISTANCE WITH SUFFICIENT FORCE TO CAUSE PERSONAL INJURY OR DAMAGE PROPERTY. If the grass deflector is damaged, repair or replace the affected parts.

Note: The deflector is spring loaded into its downward normal operating position but the operator can temporarily swing it out of the way to facilitate loading in a trailer or other manuevers.

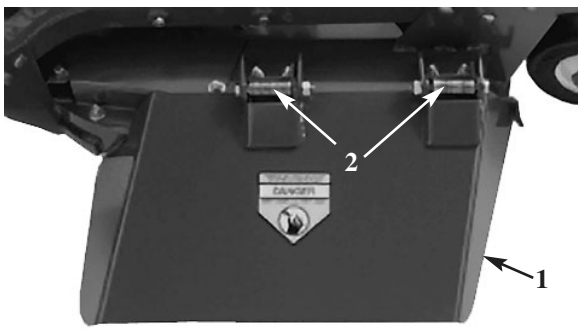

Figure 7

1. Grass deflector
2. Springs

Tension Spring Adjustment

For best performance, adjust spring tension so cutting unit bounce on uneven turf is minimal and the deck does not ride heavily over flat terrain. If scalping occurs or the cut is uneven from side to side, there may too much weight on the deck and weight may have to be transferred to the traction unit, i.e., increased spring tension.

By contrast, if too much weight is transferred to the traction unit, the deck will bounce excessively and the cut will be uneven. If the cutting unit does not perform properly, adjust as follows:

1. Stop the machine on a level surface, set the parking brake, fully raise the cutting unit, turn the ignition key to OFF and remove the key from the switch.

2. Remove the hair pin cotter from clevis pin securing spring end to spring cover and remove clevis pin. Align the top spring end hole with the new hole selected in the spring cover, insert the clevis pin and secure it with the hairpin cotter.

3. Resume operations. If further adjustments are required, repeat the procedure.

CAUTION

Counterbalance spring(s) are in tension when the deck is in the lowered position. Always raise the deck before adjusting or removing the springs.

Maintenance

Grease Bearings, Bushings and Gear Box (Fig. 8-10)

1. The cutting unit has bearings and bushings that must be lubricated, and these lubrication points are: front castor spindle bushings (Fig. 8); front and rear castor wheel bearings (Fig. 8); right and left lift arm pivot pins (Fig. 9); blade spindle bearings (Fig. 10) and right and left ball joints (Fig 10).

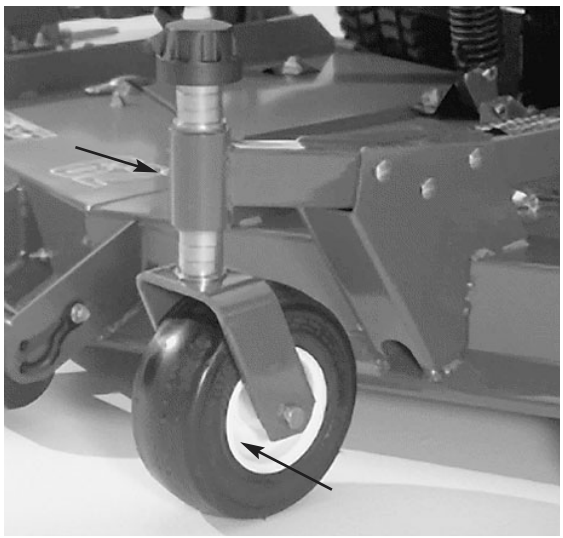

Figure 8

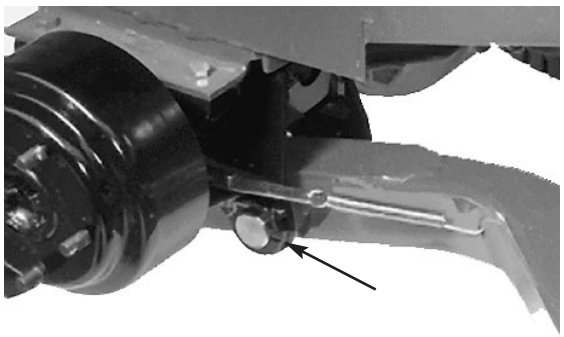

Figure 9

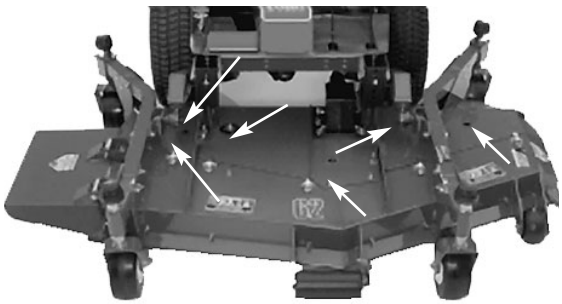

Figure 10

2. Position machine and cutting unit on a level surface and lower the cutting unit. Remove the check plug from the side of the gear box (Fig. 11) and make sure lubricant is up to the bottom of the hole. If the lubricant's level is low, remove the fill plug on top of the gear case and add SAE 80-90 weight gear lube until the level is up to the bottom of the hole.

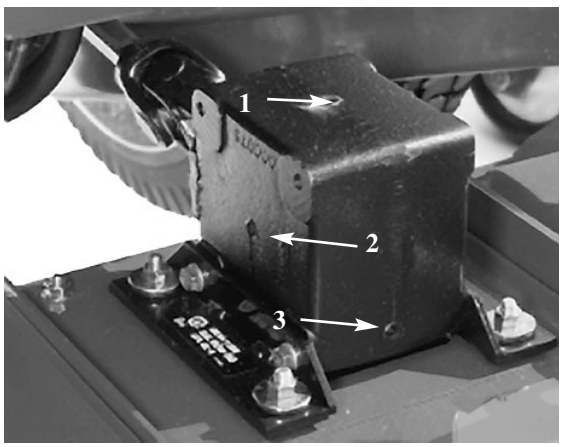

Figure 11

1. Filler plug
2. Check plug
3. Drain plug

Troubleshooting

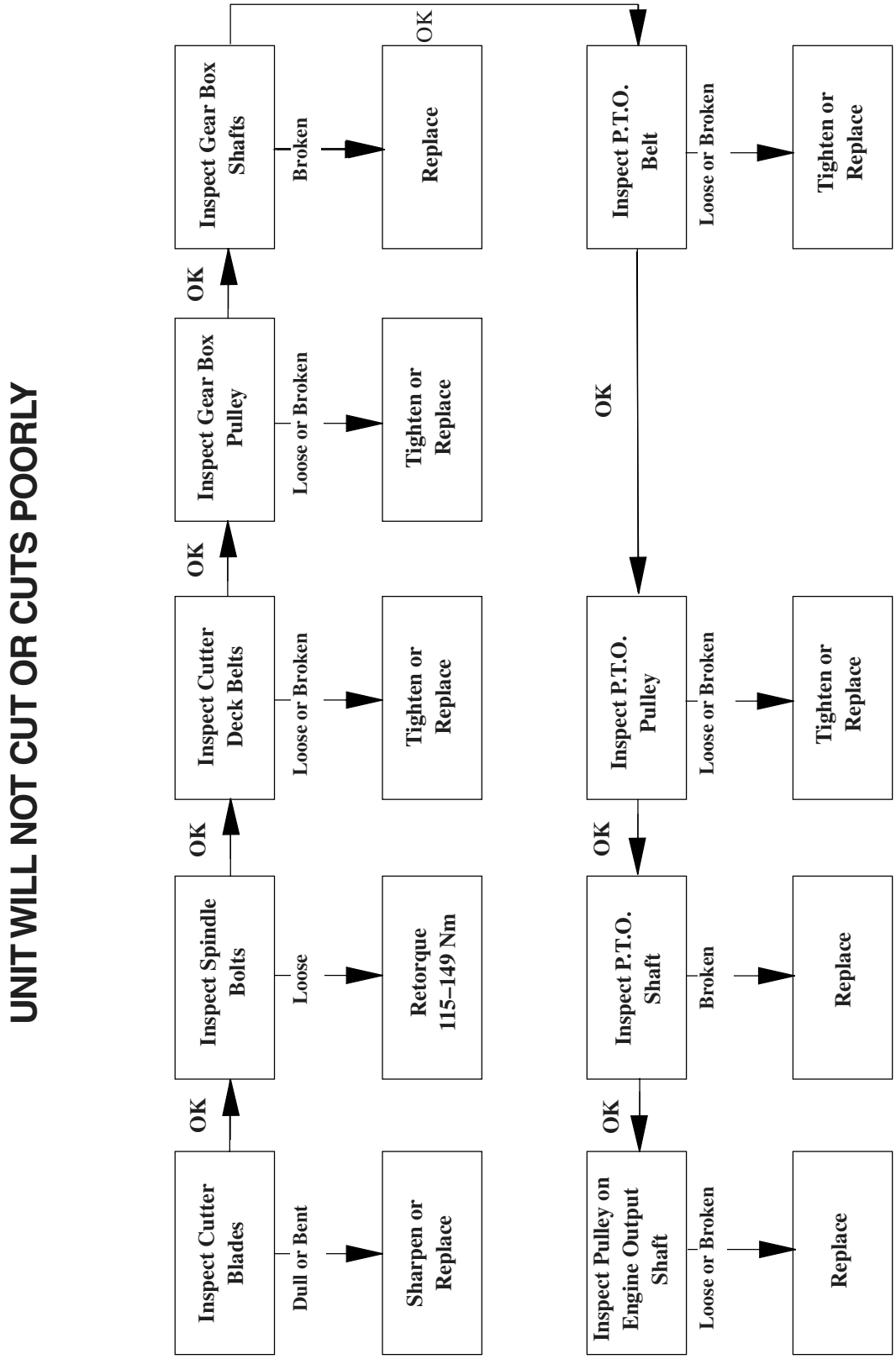

Separating the Cutting Unit from the Traction Unit

1. Position the machine on a level surface, raise the cutting unit, engage the parking brake, be sure the traction pedal is in neutral position, PTO lever in OFF position, shut engine OFF and remove the key from the switch.

CAUTION

Counterbalance springs are in dension when the deck is in its lowered position. Always raise the deck before adjusting or removing the springs.

2. Disconnect the counterbalance from the traction unit, remove the lockpins from the brackets, separate the spring tension assemblies from the brackets and lay them down on the deck. Loosely secure the lockpins to the brackets to prevent losing them (Fig. 12).

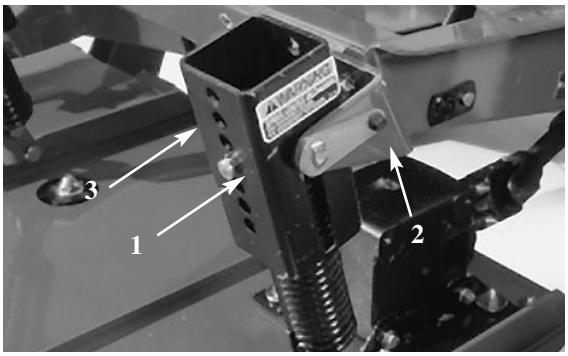

Figure 12

1. Lockpin
2. Bracket
3. Spring tension assembly

3. Position the machine on a level surface, lower the cutting unit to the floor, move the lift lever to the float position, shut the engine off and engage the parking brake.

4. Remove the capscrews and locknuts securing the ball joint mounts to the castor arms on the cutting unit.

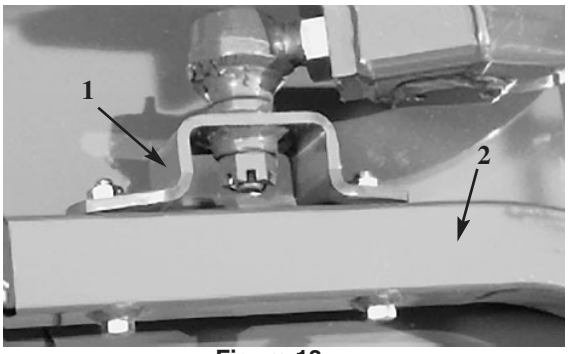

Figure 13

1. Castor arm
2. Ball joint mount

5. Roll the cutting unit away from the traction unit separating the male and female sections of the PTO shaft.

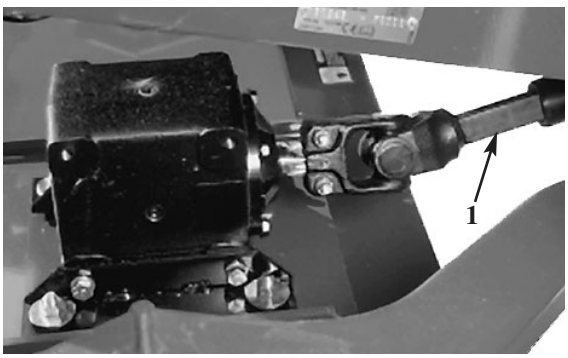

Figure 14

1. PTO shaft

DANGER

Do not start the engine and engage the PTO lever when the PTO shaft is not connected to the gear box on the cutting unit. If the engine is started and the PTO shaft is allowed to rotate, serious injury could result.

Mounting the Cutting Unit to the Traction Unit

1. Position the machine on a level surface and shut the engine off.

2. Move the cutting unit into position in front of the traction unit.

3. Slide the male PTO shaft into the female PTO shaft.

4. Move the lift lever to the FLOAT position. Push the lift arms down until the holes in the ball joint mounts line up with the holes in the castor arms.

5. Secure the ball joint mounts to the castor arms with capscrews and flange nuts.

6. Raise the cutting unit and place blocks under it to prevent it from failing during assembly.

7. Connect the counterbalance to the traction unit brackets with lock pins.

8. Remove the blocks from under the cutting unit. Make final counterbalance adjustments under actual cutting conditions; refer to *Tension Spring Adjustment, p 13.*

Servicing Castor Arm Bushings

The castor arms have bushings pressed into the top and bottom portion of the tube which, after many hours of operation, will wear. To check the bushings, move the castor fork back and forth and from side to-side. If the castor shaft is loose inside the bushings, bushings are worn and must be replaced.

1. Raise the cutting unit so its wheels are off the floor and block it so it cannot accidentally fall.

2. Remove the tensioning cap, spacers and thrust washers from the top of the castor spindle.

3. Pull the castor spindle out of the mounting tube. Allow the thrust washers and spacer to remain on the bottom of the spindle.

4. Insert the pin punch into the top or bottom of the mounting tube and drive the bushing out of the tube (Fig. 15). Also drive the other bushing out of the tube. Clean the inside of the mounting tube to remove any dirt.

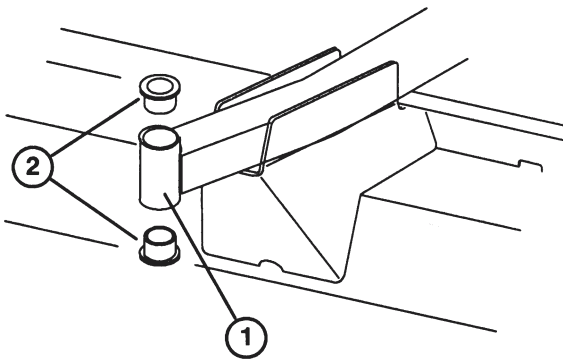

Figure 15

1. Front castor arm tube
2. Bushings

5. Apply grease to the inside and outside of new bushings. Using a hammer and flat plate, drive the bushings into the mounting tube.

6. Inspect the castor spindle for wear and replace it if it is damaged.

7. Push the castor spindle through the bushings and mounting tube. Slide the thrust washers and spacer(s) onto the spindle. Install the tensioning cap on the spindle to retain all parts in place.

Servicing the Castor Wheels and Bearings

The castor wheel rotates on a high-quality roller bearing and is supported by a spanner bushing. Even after many hours of use, if the bearing was kept well-lubricated, bearing wear will be minimal. However, failure to keep the bearing lubricated will cause rapid wear. A wobbly castor wheel usually indicates a worn bearing.

1. Remove the locknut from the capscrew holding the castor wheel assembly between the castor fork. Grasp the castor wheel and slide the capscrew out of the fork.

2. Pull the spanner busing out of the wheel hub.

3. Remove a bushing from the wheel hub and allow the bearing to fall out. Remove the

bushing from the opposite side of the wheel hub.

4. Inspect the bearing, spanner bushing and the inside of the wheel for wear. Replace defective parts.

5. To assemble the castor wheel, push a bushing into the wheel hub. Slide the bearing into the wheel hub. Push the other bushing into the open end of the wheel hub and captivate the bearing inside the wheel hub.

6. Carefully slide the spanner through the bushings and the wheel hub.

7. Install the castor wheel assembly between the castor fork and secure it in place with a capscrew, washers and a locknut.

8. Lubricate the castor wheel bearing through the grease fitting, using No. 2 general purpose lithium base grease.

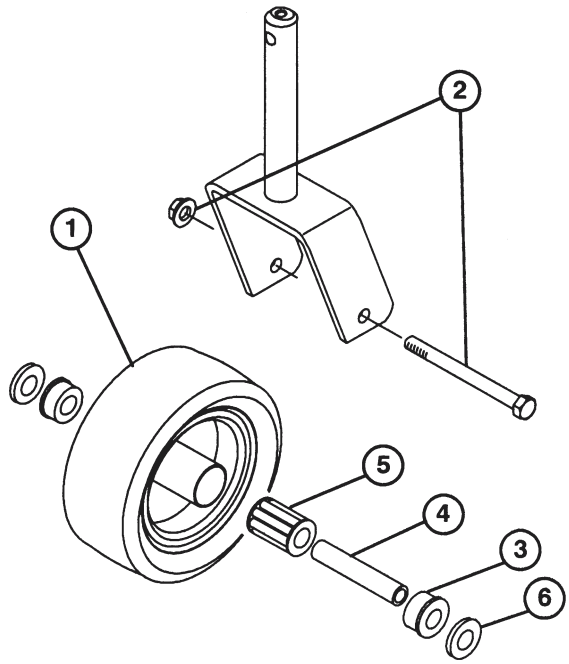

Figure 16

1. Castor wheel
2. Capscrew & locknut
3. Bushing (2)
4. Spanner bushing
5. Roller bearing
6. Washer (2)

Checking for a Bent Blade

1. Position the machine on a level surface, raise the cutting unit, engage the parking brake, be sure the traction pedal is in the neutral position, the PTO lever in the OFF position, shut off the engine, remove the key from the switch and disconnect the wires from the spark plugs. Block the cutting unit to prevent it from falling accidentally.

2. Rotate the blade until the ends face forward and backward. Measure from inside of the cutting unit to the cutting edge at front of blade (Fig. 17), and remember this dimension.



Figure 17

3. Rotate the opposite end of the blade forward. Measure between the cutting unit and the cutting edge of blade at the same position as in step 2. The difference between dimensions obtained in steps 2 and 3 must not exceed 32 mm. If dimension exceeds 32 mm, replace the blade because it is bent: refer to Removing Cutter Blade.

Replacing the Cutter Blade

The blade must be replaced if a solid object is hit, the blade is out-of-balance or if the blade is bent. Always use genuine TORO replacement blades to be sure of safety and optimum performance. Never use replacement blades made by other manufacturers because they could be dangerous.

WARNING

Do not try to starighten a blade that is bent, and never weld a broken or cracked blade. Always use a new blade to assure safety.

1. Position the machine on a level surface, raise the cutting unit, engage the parking brake, be

sure the traction pedal is in neutral position, the PTO lever in the OFF position, shut off the engine, remove the key from the switch and disconnect wires from spark plugs. Block the cutting unit to prevent it from falling accidentally.

2. Grasp the end of blade using a cloth or thickly padded glove. Remove the blade bolt, flatwasher, cup and blade from spindle shaft.

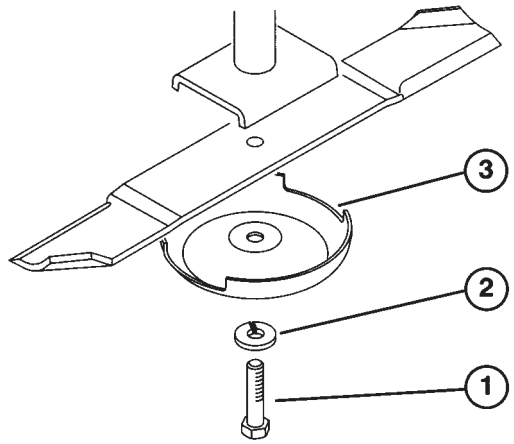

Figure 18

1. Blade bolt
2. Flatwasher
3. Cup

3. Install the blade-sail facing toward the cutting unit- with the cup, flatwasher and blade bolt. Tighten the blade bolt to 115–149 Nm

Checking the Sail and Sharpening the Cutter Blade

Two areas must be considered when checking and servicing the cutter blade: one area is the sail, the other is the cutting edge. Both the cutting edges and the sail, which is the turned up portion opposite the cutting edge, contribute to a good quality-of-cut. The sail is important because it pulls grass up straight, thereby producing an even cut. However, the sail will gradually wear down during operation, and this condition is normal. As the sail wears down, the quality-of-cut will degrade somewhat, although the cutting edges are sharp. The cutting edge of the blade must be sharp so the grass is cut rather than torn. A dull cutting edge is evident when tips of the grass appear brown and shredded. Sharpen the cutting edges to correct this condition.

1. Position the machine on a level surface, raise the cutting unit, engage the parking brake, be sure the traction pedal is in neutral position, the PTO lever in the OFF position, shut engine OFF, remove the key from the switch and disconnect wires from spark plugs. Block the cutting unit to prevent it from falling accidentally.

2. Examine the cutting ends of the blade carefully, especially where the flat and curved parts of the blade meet (Fig. 19 A). Since sand and abrasive material can wear away the metal that connects the flat and curved parts of the blade, check the blade before using the mower. If wear is noticed (Fig. 19 B), replace the blade.

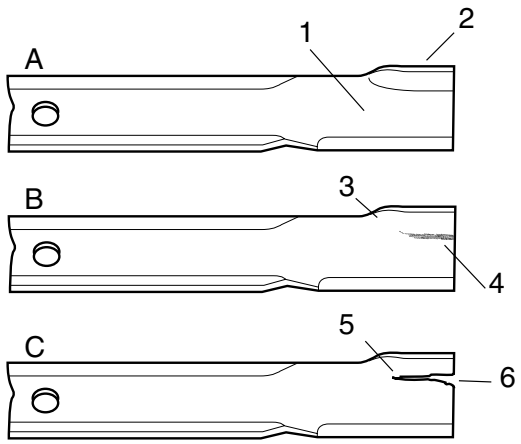

Figure 19

1. Flat part of blade
2. Sail
3. Sail
4. Wear
5. Wear
6. Slot formed

3. Examine the cutting edges of all blades. Sharpen the cutting edges if they are dull or nicked. Sharpen only the top of the cutting edge and maintain the original cutting angle to make sure of sharpness (Fig. 20). The blade will remain balanced if same amount of metal is removed from both cutting edges.

DANGER

If the blade is allowed to wear, a slot will form between the sail and the flat part of the blade (Fig. 19 C). Eventually a piece of the blade may break off and be thrown from under the housing, possibly resulting in serious injury to yourself or to bystanders.

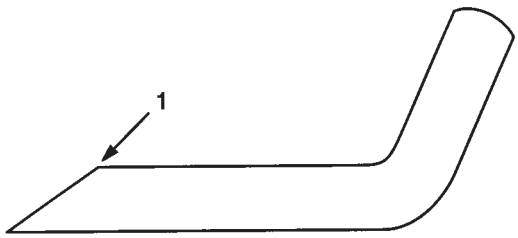

Figure 20

1. Sharpen at this angle only

Note: Remove the blades and sharpen them on a grinder: refer to *Removing Cutter Blades*, steps 2 and 3. After sharpening the cutting edges, reinstall the blade with the cup, flatwasher and blade bolt. Blade sails must be on top of blade. Tighten the blade bolt to 115–149 Nm.

Correcting Cutting Unit Mismatch

If one cutter blade cuts lower than the others, correct as follows:

1. Lower the cutting unit onto a level surface, engage the parking brake, be sure the traction pedal is in neutral position, the PTO lever in the OFF position, shut engine OFF, remove the key from the switch and disconnect wires from spark plugs. Make sure tire pressure is equal on all tires.

2. Raise the height-of-cut to the 4 in. position: refer to *Adjusting Height Of Cut, p 10.*

3. Rotate blades so the tips line up with one another. Tips of the adjacent blades must be within 3 mm If tips are not within 3 mm of each other, proceed to step 10 and add shims between spindle housing and bottom of the cutting unit.

4. Check to make sure front height-of-cut pins are resting properly on frame cushions. If pins are not resting properly, place a shim or shims under cushion to raise it for proper alignment.

5. Position all three blades in the “A” position (Fig. 21) and measure from level surface to the bottom of the tip end of each blade (Fig. 22).

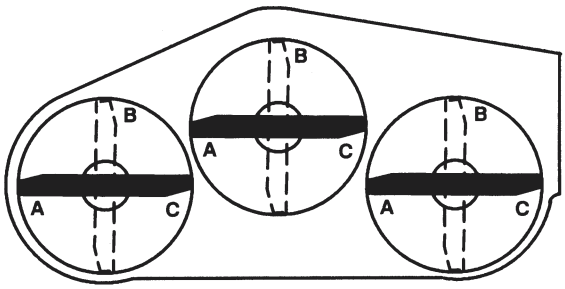

Figure 21

6. Note measurement attained at “A”, rotate blades to the“B” position (Fig. 21), measure distance of all blades to level surface and note dimensions (Fig. 22).

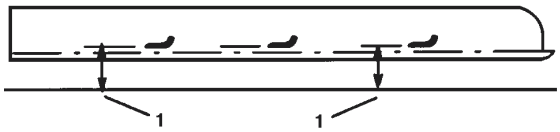

Figure 22

1. Measure from blade tip to level surface

7. Rotate blades to the “C” position, measure and note distance measured (Fig. 21, 22).

8. Compare measurements at various positions. All dimensions must be equal within 6 mm from any two adjacent blades. The difference between dimensions of all three blades must not exceed 9.5 mm. If difference exceeds specifications, go to step 9.

9. Remove the capscrews, flatwashers and locknuts from outer spindle in the area where shims must be added. To raise or lower the

blade, add a shim, Part No. 3256-24, between spindle housing and bottom of the cutting unit. Continue checking alignment of blades and adding shims until tips of blades are within the required dimension.

Replacing the Grass Deflector

1. Position the machine on a level surface, raise the cutting unit, engage the parking brake, be sure the traction pedal is in neutral position, the PTO lever in OFF position, shut engine OFF and remove the key from the switch. Block the cutting unit to prevent it from falling accidentally.

2. Remove two capscrews, locknuts and springs securing deflector mounts to pivot brackets.



Figure 23

1. Deflector mounts
2. Pivot brackets
3. Pivot springs

3. To remove the pivot brackets, remove carriage bolts and nuts.

4. Reinstall pivot brackets on top of discharge opening with carriage bolts and nuts. Head of carriage bolts must be on inside of the cutting unit.

5. Position deflector mounts on pivot brackets and secure parts together with capscrews, locknuts and springs. Both locknuts must face each other. Tighten the locknuts until they are flush against deflector pivots.

6. Lift deflector and allow it to drop to check spring tension. Deflector must be held firmly in full downward position by spring tension. Correct if necessary.

Adjusting the Idler Pulley

The idler pulley applies force against the belt so power can be transmitted to the blade pulleys. If the idler is not tensioned against the belt with sufficient force, maximum power will not be transmitted to the pulleys. Tension on the belt requires 54 to 68 Nm of torque on the large nut, which applies force against the belt If the idler is not adjusted to these specifications, adjustment is necessary.

1. Position the machine on a level surface, lower the cutting unit, engage the parking brake, be sure the traction pedal is in neutral position, the PTO lever in OFF position, shut engine OFF and remove the key from the switch.

2. Release and unhook latches securing center cover to top of the cutting unit. Remove cover from the cutting unit.

3. Loosen two nuts securing idler plate in place. Using a socket and torque wrench, tighten the idler adjusting nut to 47 N•m.

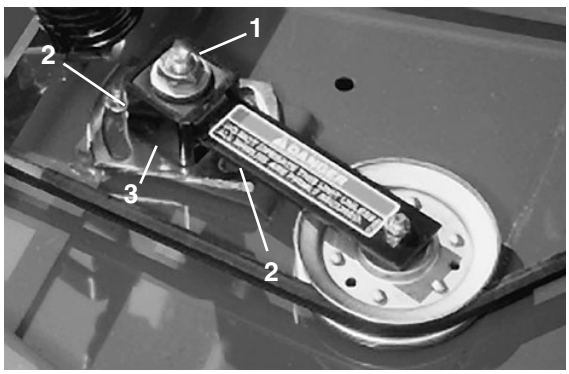

Figure 24

1. Idler adjusting nut
2. Nuts (2)
3. Idler plate

4. Hold the torque against the belt and tighten the two nuts so idler plate is held securely in place. Release the idler adjusting nut. Install the cover and secure the latches.

Adjusting Cover Latches

If the cutting unit covers fit loose, latch tension may be adjusted by loosening the latch mounting screws, and sliding the latches (slotted mounting holes in the cutting unit) to the proper position.

Replacing the Drive Belt

The blade drive belt, tensioned by the adjustable idler, is very durable. However, after many hours of use, the belt will show signs of wear. Signs of a worn belt are: squealing when the belt is rotating, blades slipping when cutting grass, frayed edges, burn marks and cracks. Replace the belt if any of these conditions are evident.

1. Position the machine on a level surface, lower the cutting unit, engage the parking brake, be sure the traction pedal is in neutral position, the PTO lever in the OFF position, shut off the engine and remove the key from the switch.

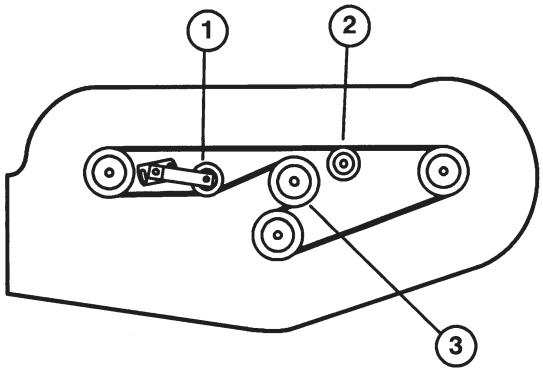

Figure 25

1. Adjustable idler pulley
2. Stationary idler pulley
3. Gear box pulley

2. Release and unhook the latches securing the covers to the top of the cutting unit. Remove the covers.

3. Loosen the two nuts securing the idler plate in place and remove the old belt fromthe pulleys.

4. To install a new belt, the gear box base must be removed. To do this, remove the four carriage bolts and locknuts holding the gear box base.

5. Install the new belt around the gear box pulley, spindle pulleys, stationary idler pulley and adjustable idler pulley.

6. Install the gear box base with carriage bolts and locknuts.

7. Using a torque wrench, adjust the tension of idler pulley against the belt: refer to *Adjusting The Idler Pulley, p 21*.

8. Reinstall covers and secure latches.

Model and Serial Numbers

The cutting deck has two identification numbers: a model number and a serial number. The two numbers are stamped into a plate which is located on carrier frame behind the right front castor wheel. In any correspondence concerning the mower, supply the model and serial numbers to assure that correct information and replacement parts are obtained.

To order repIacement parts from an authorized TORO Distributor, supply the foIlowing information:

1. Model and serial numbers of the machine.

2. Part number, description and quantity of parts desired.

Note: Do not order by reference number if a parts cataIog is being used; use the part number.