Form No. 3323–620

Tow Behind Trailer

For Trans Pro 100

Model No. 04240—200000001 and Up

Parts Catalog

Ordering Replacement Parts

To order replacement parts, please supply: the part number, the quantity, and the description of each part desired.

Understanding Reference Numbers

Each identified part in an illustration has a reference number. The reference number for a part also appears in the parts list, along with other information about the part.

This catalog uses two special reference number formats, one to indicate parts in a service assembly and another to indicate the quantity of a given part in an illustration.

Service Assembly Reference Numbers

Parts in service assemblies have reference numbers in the form **a:b.** The **a** represents the reference number of the entire service assembly and the **b** represents a sequential number unique to each part within the service assembly.

For example, a wheel assembly might be identified by reference number **6**, the tire by **6:1**, the valve by **6:2**, and the wheel by **6:3**. When you order the assembly identified by reference number 6, you receive all parts identified by reference numbers 6:1, 6:2, and 6:3. However, you may also order any part individually.

Reference numbers of this type appear in illustrations and in part lists.

Reference Numbers Indicating Quantity

In an illustration, if a reference number indicates more than one part, the reference number has the form **nX y.** The **n** represents the quantity of the part, the **X** is the multiplication symbol, and the **y** represents the reference number.

For example, in an illustration, the reference number **2X 37** means that two of the parts identified by reference number 37 are indicated.

© The TORO Company — 1999
All Rights Reserved

Contents

Description	Page
Trailer Bed Assembly	3
Tounge Assembly	4
Ramp Assembly	5
Hub and Wheel Assembly	6

Part Description Abbreviations

Part descriptions in this catalog may include the following abbreviations.

Abbreviation	Meaning
AR	as required
ASM	assembly
CARR	carriage
DEG	degrees
FH	flat head
GA	gauge
HF	hex flange
HH	hex head
HHF	hex head flange
HLH	hex lag head
HJ	hex jam
HOC	height-of-cut
HS	hex socket
HSBH	hex socket button head
HSFH	hex socket flat head
HSH	hex socket head
HWH	hex washer head
HWHTF	hex washer head thread forming
INC	incorporated
LH	left hand
NI	nylon insert
PPH	Phillips pan head
PTH	Phillips truss head
PTO	power take off
RH	right hand
SFH	slotted fillister head
SHH	slotted hex head
SQH	square head
SHWH	slotted hex washer head
SPH	slotted pan head
SRH	slotted round head
STD	standard
TAP	self tapping
TTH	Torx truss head
WH	wing head

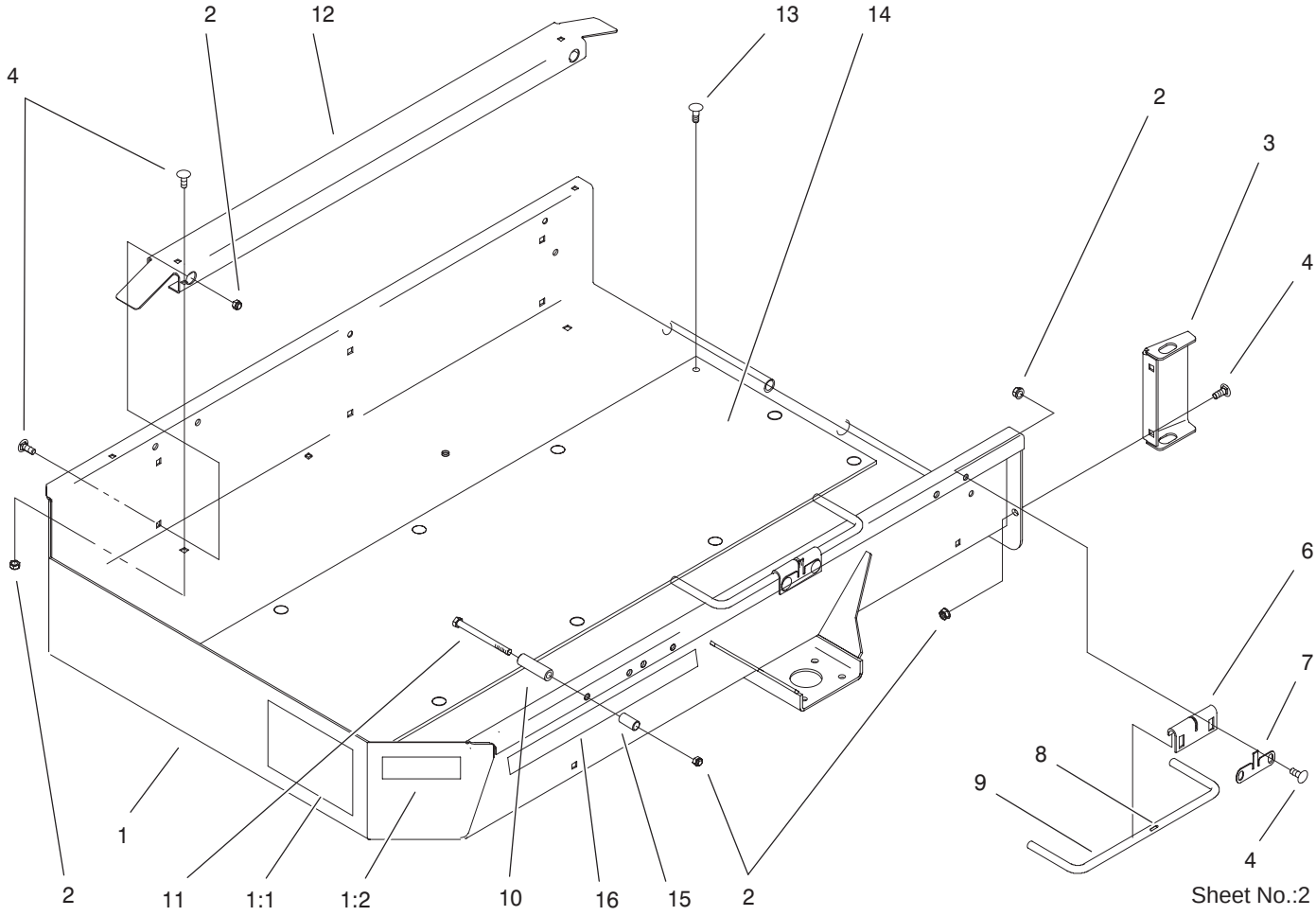

Sheet No.:2

Trailer Bed Assembly

Ref. No.	Part No.	Qty.	Description
1	104–0545	1	Bed Assembly
1:1	98–8688	1	Decal–Caution
1:2	98–8687	1	Decal–Caution, Air Pressure
2	32128–36	22	Nut–Hex Flange
3	98–8761–01	2	Guide – Wheel
4	3231–21	20	Screw–CARR
6	98–8755	4	Bracket – Rod
7	98–8697	4	Spring – Latch
8	99–4536	4	Pin–Grooved
9	98–8696	4	Rod – Large Wheel
10	98–8756	2	Spacer – Stop
11	323–38	2	Screw–HH
12	98–8677–01	2	Insert – Standard
13	99–4515	12	Panel – Fastener
14	98–8776	1	Mat – Bed
15	98–8777	2	Spacer
16	98–8694	2	Decal–Trans Pro 100

Ref. No.	Part No.	Qty.	Description

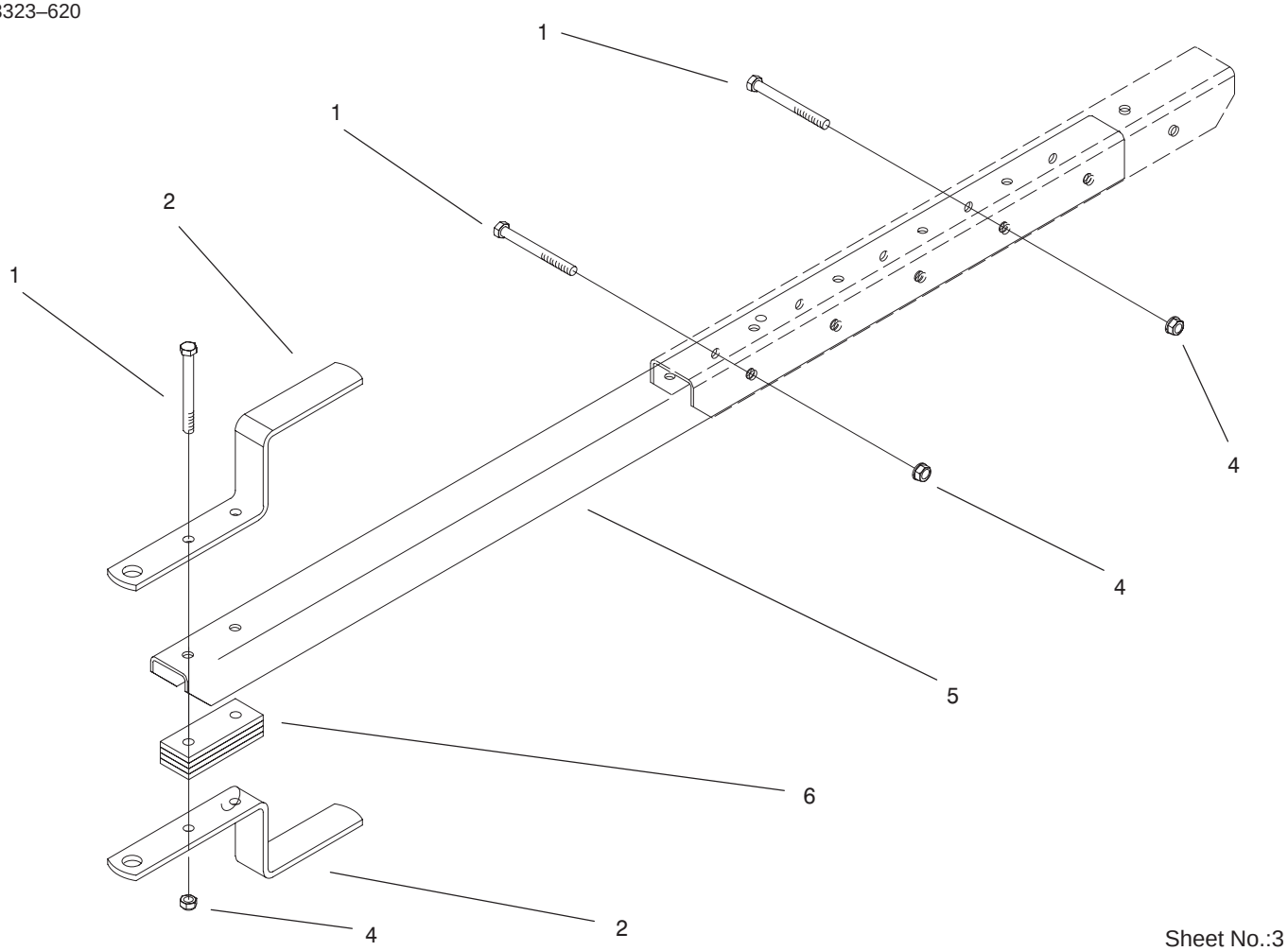

Sheet No.:3

Tounge Assembly

Ref. No.	Part No.	Qty.	Description
1	323–13	4	Screw–HH
2	98–8779–01	2	Hitch – Trailer
4	32128–36	4	Nut–Hex Flange
5	99–4543–01	1	Tongue – Trailer
6	98–8780	4	Spacer–Hitch

Ref. No.	Part No.	Qty.	Description

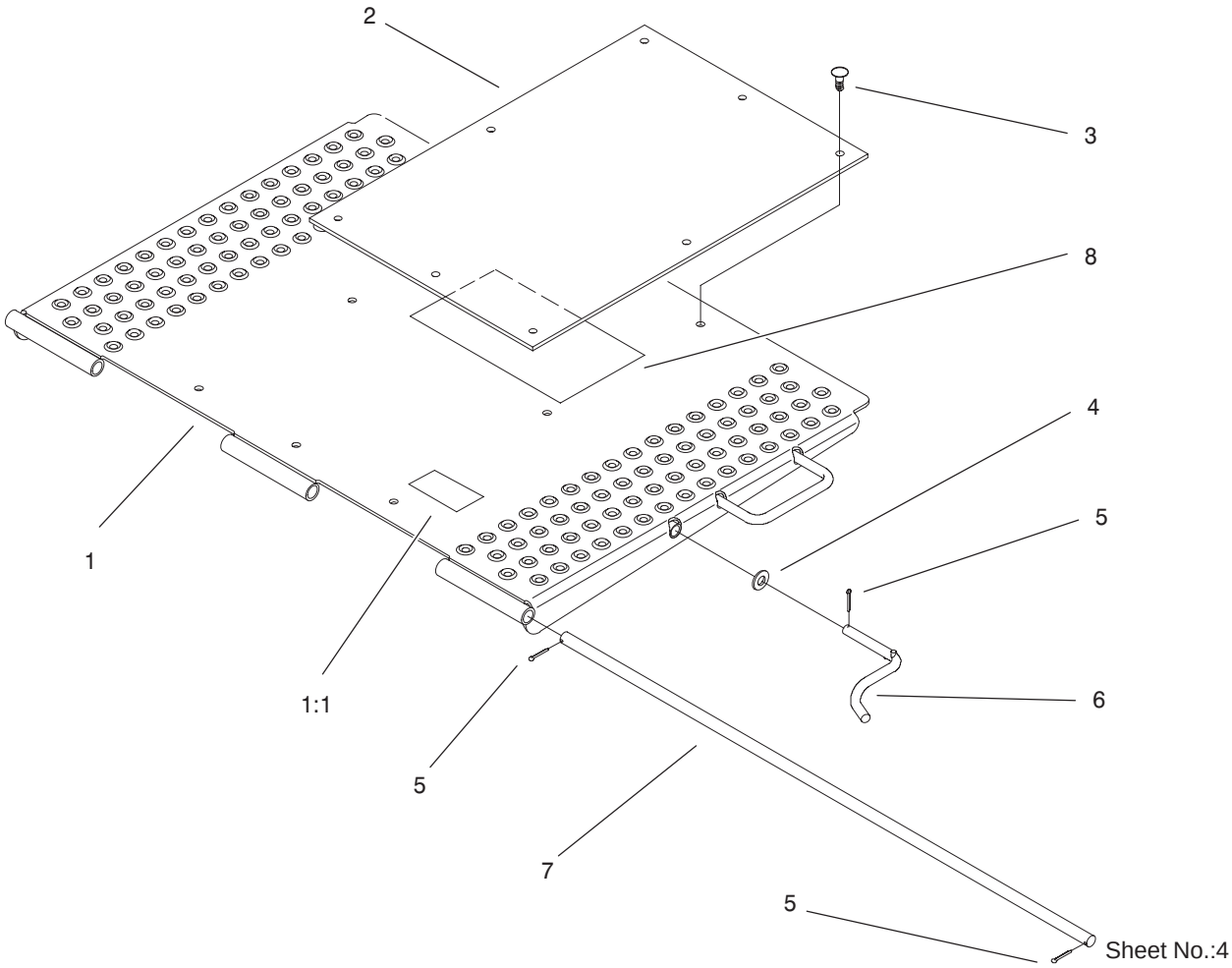

Ramp Assembly

Ref. No.	Part No.	Qty.	Description
1	104–0546	1	Trailer Ramp Asm
1:1	98–8676	1	Decal–Caution
2	98–8775	1	Mat – Ramp
3	99–4515	8	Panel – Fastener
4	3256–26	1	Washer–Flat
5	3272–7	3	Pin–Cotter
6	98–8754	1	Latch – Ramp
7	98–8759	1	Hinge – Rod
8	62–5550	1	Decal–Toro

Ref. No.	Part No.	Qty.	Description

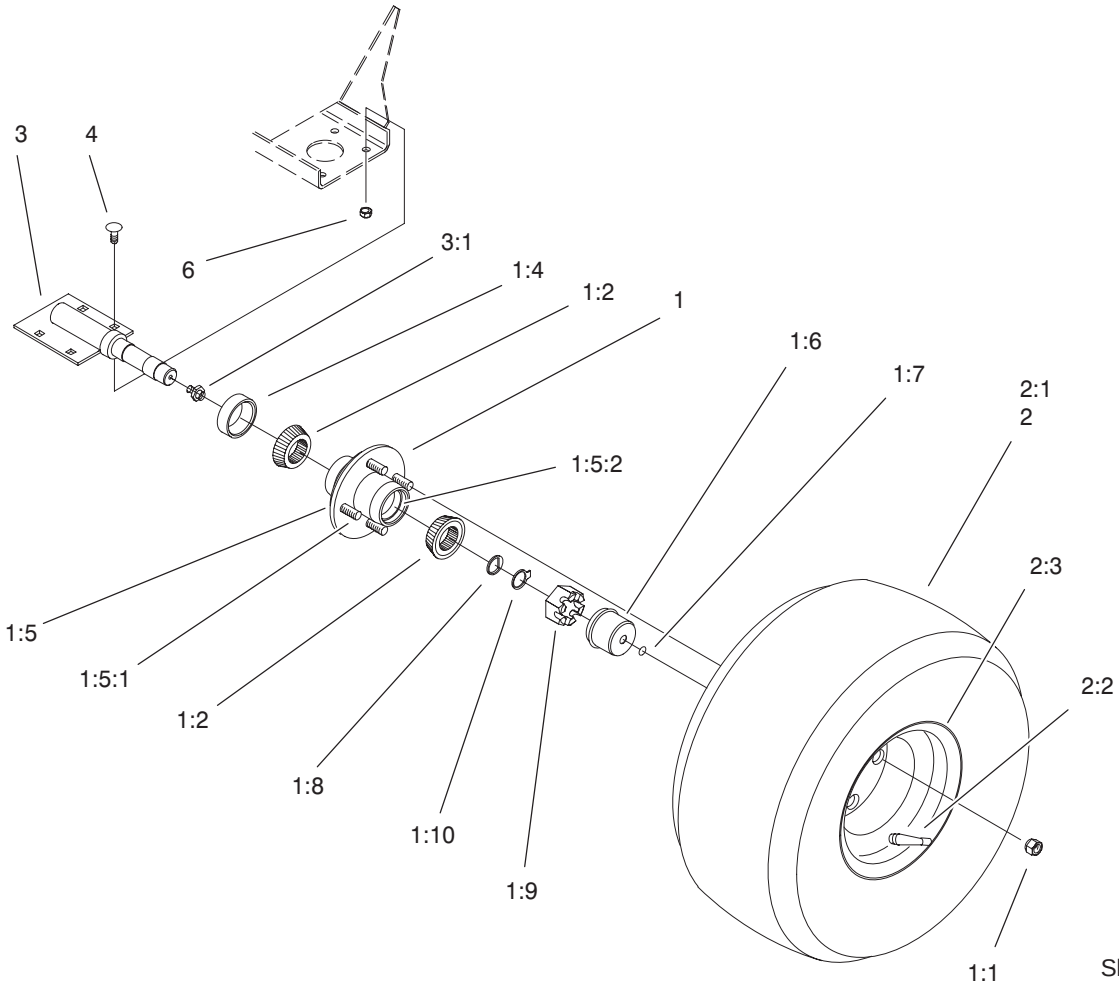

Sheet No.:5

Hub and Wheel Assembly

Ref. No.	Part No.	Qty.	Description
1	98–8690	2	Hub ASM
1:1	242–50	4	Nut–Lug
1:2	99–4501	2	Cone – Bearing
1:4	99–4500	1	Seal – Grease
1:5	99–4502	1	Hub
1:5:1	99–4512	4	Stud – Screw In
1:5:2	99–4511	2	Race – Bearing
1:6	99–4503	1	Cap – Grease
1:7	99–4504	1	Plug – Cap, Grease
1:8	99–4505	1	Washer
1:9	99–4508	1	Nut – Castle
1:10	99–4509	1	Washer – Tang
2	98–8691	2	Wheel ASM
2:1	232–27	1	Stem–Valve
2:2	99–4506	1	Tube
2:3	99–4507	1	Rim
3	98–8766–01	2	Axle
3:1	302–58	1	Zerk
4	3231–22	8	Screw–CARR
6	32128–36	8	Nut–Hex Flange

Ref. No.	Part No.	Qty.	Description

Maintenance Record

Date								


TORO®