FORM NO. 3323–631

TORO®

MODEL NO. 03803 – 200000001 & UP MODEL NO. 03804 – 200000001 & UP	OPERATOR'S MANUAL

REELMASTER® 6500–D

2 & 4 WHEEL DRIVE TRACTION UNITS

To understand this product, and for safety and optimum performance, read this manual before starting the engine. Pay special attention to SAFETY INSTRUCTIONS highlighted by this symbol.

It means CAUTION, WARNING or DANGER – personal safety instruction. Failure to comply with the instruction may result in personal injury.

TORO
THIS UNIT CONFORMS TO ANSI B71.4–1990

The REELMASTER 6500–D conforms to the B71.4-1990 specifications of the American National Standards Institute's safety standards for riding mowers when ballast is added (Refer to page 12 for ballast requirements.

© The TORO COMPANY – 1999

FOREWORD

This operator's manual has instructions on safety, proper set−up and operation, adjustments and maintenance. Therefore, anyone involved with the product, including the operator, should read and understand this manual. Major sections are:

- Safety Instructions
- Specifications
- Set−up Instructions
- Before Operating
- Know Your Controls
- Operating Instructions
- Maintenance
- Schematics

This manual emphasizes safety, mechanical and general product information. **DANGER**, **WARNING** and **CAUTION** identify safety messages. Whenever the triangular safety alert symbol appears, understand the safety message that follows. For complete safety instructions, read pages 4− 7. **IMPORTANT** highlights special mechanical information and **NOTE** emphasizes general product information worthy of special attention.

OPTIONAL SPARK ARRESTER

In some places a spark arrester muffler must be used because of local, state or federal regulations. The spark arrester available from your local Toro Distributor is approved by the United States Department of Agriculture and the United States Forest Service. Order the following parts from your local Toro Distributor:

Spark Arrester	Part No. 94−2849

When the mower is used or operated on any California forest, brush or grass covered land, a properly operating spark arrester must be attached to the muffler. The operator is violating state law, Section 442 Public Resources Code if a spark arrester is not used.

WARNING:

Diesel engine exhaust and some of its constituents are known to the State of California to cause cancer, birth defects, or other reproductive harm.

IDENTIFICATION AND ORDERING

MODEL AND SERIAL NUMBER

The model and serial number is on a plate that is mounted on the left side of frame above footrest (Fig. 1). Use model and serial number in all correspondence and when ordering parts.

To order replacement parts from an authorized TORO Distributor, supply the following information:

1. Model and serial numbers of the machine.

2. Part number, description and quantity of parts desired.

Note: Do not order by reference number if a parts catalog is being used; use the part number.

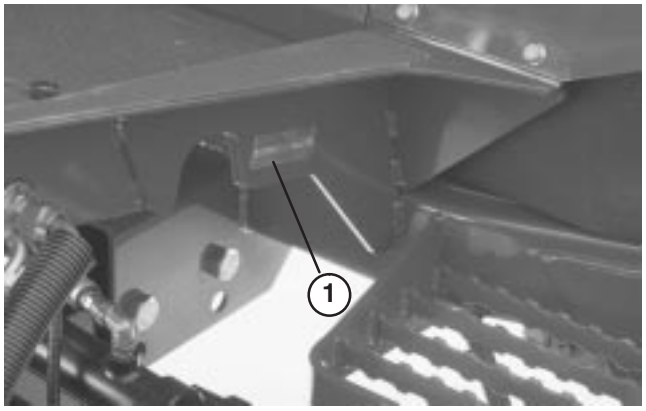

Figure 1
1. Model & serial plate

TABLE OF CONTENTS

	Page
IDENTIFICATION & ORDERING	2
Model And Serial Number	2
SAFETY INSTRUCTIONS	4–5
Safety Instructions	4
Before Operating	4
While Operating	4
Maintenance	5
SAFETY INSTRUCTIONS & DECALS	6–7
SPECIFICATIONS	8
LOOSE PARTS CHART	9
SET-UP INSTRUCTIONS	9–12
Install Cutting Units	9
Cutting Unit Selection	10
Rear Ballast	12
BEFORE OPERATING	13–15
Check Engine Oil	13
Check Cooling System	13
Fill Fuel Tank	13
Check Hydraulic Fluid	14
Check Planetary Gear Drive Oil	14
Check Rear Axle Lubricant (Model 03804)	15
Check Tire Pressure	15
Check Reel To Bedknife Contact	15
Check Torque Of Wheel Nuts	16
KNOW YOUR CONTROLS	16
OPERATING INSTRUCTIONS	18–23
Starting And Stopping	18
Priming Fuel System	18
Automatic Clip Control	18
Selecting Clip Rate (Reel Speed)	19
Reel Control Light	20
Pushing or Towing Machine	20
Diagnostic Light	20
Diagnostic ACE Display	21
Checking Interlock Switches	21
Fault Memory and Retrieval	22
Hydraulic Solenoid Valve Functions	23
H.O.C. Selection Potentiometer Replacement	23
LUBRICATION	24–25
Greasing Bearings And Bushings	24
SERVICE INTERVAL CHART	25
DAILY MAINTENANCE CHECKLIST	26
MAINTENANCE SCHEDULE	27
AIR CLEANER MAINTENANCE	28
General Air Cleaner Maintenance	28
Servicing Air Cleaner	28
ENGINE MAINTENANCE	30–32
Engine Oil And Filter	30
Fuel System	30
Engine Cooling System	31
Engine Fan Belt	32
HYDRAULIC MAINTENANCE	33–34
Changing Hydraulic Fluid	33
Replacing Hydraulic Filter	33
Checking Hydraulic Lines And Hoses	33
Hydraulic System Test Ports	34
Adjusting Traction Drive For Neutral	34
HYDRAULIC SCHEMATICS	35–36
BRAKE MAINTENANCE	37
Adjusting Service Brakes	37
AXLE MAINTENANCE	37–38
Changing Planetary Gear Drive Oil	37
Changing Rear Axle Lubricant	37
Rear Wheel Toe–in	38
ELECTRICAL MAINTENANCE	39
Battery Care	39
Fuses	39
Optional Lighting	39
ELECTRICAL SCHEMATICS	40
CUTTING UNIT MAINTENANCE	41
Backlapping	41
PREPARATION FOR SEASONAL STORAGE	42
NOTES	43
WARRANTY	Back Cover

SAFETY INSTRUCTIONS

The REELMASTER 6500-D was tested and certified by TORO for compliance with the B71.4-1990 specifications of the American National Standards Institute. Although hazard control and accident prevention partially are dependent upon the design and configuration of the machine, these factors are also dependent upon the awareness, concern, and proper training of the personnel involved in the operation, transport, maintenance, and storage of the machine. Improper use or maintenance of the machine can result in injury or death. To reduce the potential for injury or death, comply with the following safety instructions.

BEFORE OPERATING

1. Read and understand the contents of this manual before starting and operating the machine. Become familiar with the controls and know how to stop the machine and engine quickly. A free replacement manual is available by sending the complete model and serial number to:

The Toro Company
8111 Lyndale Avenue South
Bloomington, Minnesota 55420–1196.

2. Never allow children to operate the machine. Do not allow adults to operate machine without proper instruction. Only trained operators who have read this manual should operate this machine.

3. Never operate the machine when under the influence of drugs or alcohol.

4. Keep all shields, safety devices and decals in place. If a shield, safety device or decal is defective, illegible or damaged, repair or replace it before operating the machine. Also tighten any loose nuts, bolts or screws to ensure machine is in safe operating condition.

5. Always wear substantial shoes. Do not operate machine while wearing sandals, tennis shoes, sneakers or when barefoot. Do not wear loose fitting clothing that could get caught in moving parts and possibly cause personal injury. Wearing safety glasses, safety shoes, long pants and a helmet is advisable and required by some local ordinances and insurance regulations.

6. Assure interlock switches are adjusted correctly so engine cannot be started unless traction pedal is in NEUTRAL and cutting units are DISENGAGED.

7. Remove all debris or other objects that might be picked up and thrown by the reels or fast moving components from other attached implements. Keep all bystanders away from operating area.

8. Since diesel fuel is highly flammable, handle it carefully:

A. Use an approved fuel container.

B. Do not remove fuel tank cap while engine is hot or running.

C. Do not smoke while handling fuel.

D. Fill fuel tank outdoors and only to within an inch of the top of the tank, not the filler neck. Do not overfill.

E. Wipe up any spilled fuel.

WHILE OPERATING

9. Sit on the seat when starting and operating the machine.

10. Before starting the engine:

A. Engage the parking brake.

B. Make sure traction pedal is in NEUTRAL, throttle is in SLOW and the ENABLE / DISABLE switch is in DISABLE.

C. After engine is started, release parking brake and keep foot off traction pedal. Machine must not move. If movement is evident, the neutral return mechanism is adjusted incorrectly; therefore, shut engine off and adjust until machine does not move when traction pedal is released.

11. Seating capacity is one person. Therefore, never carry passengers.

12. Do not run engine in a confined area without adequate ventilation. Exhaust fumes are hazardous and could possibly be deadly.

13. Check interlock switches daily for proper operation. If a switch fails, replace it before operating the machine. The interlock system is for your protection, so do not bypass it. Replace all interlock switches every two years.

14. Using the machine demands attention and to prevent loss of control:

A. Operate only in daylight or when there is good artificial light.

B. Drive slowly

C. Watch for holes or other hidden hazards.

D. Look behind machine before backing up.

E. Do not drive close to a sand trap, ditch, creek or other hazard.

F. Reduce speed when making sharp turns and turning on a hillside.

G. Avoid sudden stops and starts.

15. Traverse slopes carefully. Do not start or stop suddenly when traveling uphill or downhill.

SAFETY INSTRUCTIONS

16. Operator must be skilled and trained in how to drive on hillsides. Failure to use caution on slopes or hills may cause loss of control and vehicle to tip or roll possibly resulting in personal injury or death. On 4 wheel drive model, always use the seat belt and ROPS together.

17. If engine stalls or loses power and cannot make it to the top of a slope, do not turn machine around. Always back slowly straight down the slope.

18. DON'T TAKE AN INJURY RISK! When a person or pet appears unexpectedly in or near the mowing area, **STOP MOWING**. Careless operation, combined with terrain angles, ricochets, or improperly positioned guards can lead to thrown object injuries. Do not resume mowing until area is cleared.

19. Do not touch engine, muffler or exhaust pipe while engine is running or soon after it is stopped. These areas could be hot enough to cause burns.

20. If cutting unit strikes a solid object or vibrates abnormally, stop cutting units immediately, turn engine off, set parking brake and wait for all motion to stop. Inspect for damage. If reel or bedknife is damaged, repair or replace it before operating. Do not attempt to free blocked cutting unit by reversing reel direction. Damage to reel may result.

21. Before getting off the seat:

A. Move traction pedal to neutral.

B. Set parking brake.

C. Disengage cutting units and wait for reels to stop.

D. Stop engine and remove key from switch.

E. Toro recommends that anytime the machine is parked (short or long term) the cutting units should be lowered to the ground. This relieves pressure from the lift circuit and eliminates the risk of the cutting units accidentally lowering to the ground.

F. Do not park on slopes unless wheels are chocked or blocked.

MAINTENANCE

22. Before servicing or making adjustments, stop engine and remove key from the switch.

23. Make sure machine is in safe operating condition by keeping all nuts, bolts and screws tight.

24. Make sure all hydraulic line connectors are tight, and all hydraulic hoses and lines are in good condition before applying pressure to the system.

25. Keep body and hands away from pin hole leaks in hydraulic lines that eject high pressure hydraulic fluid. Use cardboard or paper to find hydraulic leaks. Hydraulic fluid escaping under pressure can penetrate skin and cause injury. Fluid accidentally injected into the skin must be surgically removed within a few hours by a doctor familiar with this form of injury or gangrene may result.

26. Before disconnecting or performing any work on the hydraulic system, all pressure in system must be relieved by stopping engine and lowering cutting units to the ground.

27. If major repairs are ever needed or assistance is desired, contact an Authorized Toro Distributor.

28. To reduce potential fire hazard, keep engine area free of excessive grease, grass, leaves and dirt. Clean protective screen on front of engine frequently.

29. If engine must be running to perform maintenance or an adjustment, keep hands, feet, clothing and other parts of the body away from cutting units and other moving parts. Keep everyone away.

30. Do not overspeed the engine by changing governor setting. To assure safety and accuracy, have an Authorized Toro Distributor check maximum engine speed.

31. Shut engine off before checking or adding oil to the crankcase.

32. Disconnect battery before servicing the machine. If battery voltage is required for troubleshooting or test procedures, temporarily connect the battery.

33. At the time of manufacture, the machine conformed to the safety standards for riding mowers. To assure optimum performance and continued safety certification of the machine, use genuine Toro replacement parts and accessories. Replacement parts and accessories made by other manufacturers may result in non-conformance with the safety standards, and the warranty may be voided.

SOUND PRESSURE LEVEL

This unit has an equivalent continuous A-weighted sound pressure at the operator ear of: 82 dB(A), based on measurements of identical machines per Directive 84/538/EEC and amendments.

VIBRATION LEVEL

Hand-Arm

This unit does not exceed a vibration level of 2.5 m/s^2 at the hands based on measurements of identical machines per ISO 5349 procedures.

Whole Body

This unit does not exceed a vibration level of .5 m/s^2 at the posterior based on measurements of identical machines per ISO 2631 procedures.

SAFETY AND INSTRUCTION DECALS

The following safety and instruction decals are affixed to the traction unit. If any decal becomes illegible or damaged, install a new decal. Part numbers are listed below and in your Parts Catalog. **Note:** Book symbol means to refer to Operator's Manual for further information.

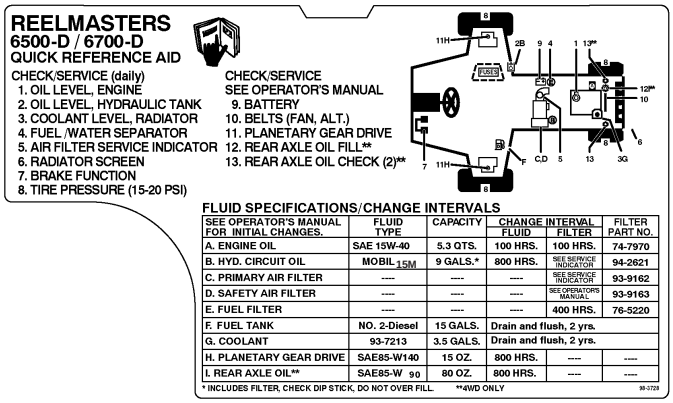

IN TOOL BOX
(Part No. 100–3738)
Quick Reference Aid

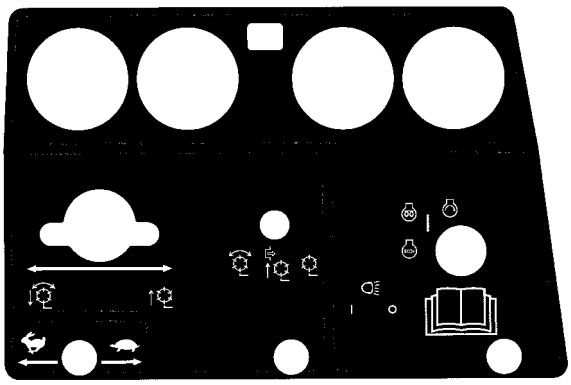

ON CONTROL PANEL
(Part No. 99–8967)
Operating Instructions
for Reels and Engine

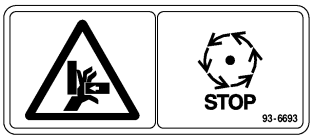

UNDER FLOOR PLATE
(Part No. 93–6693)
WARNING: Moving Parts
under floor plate

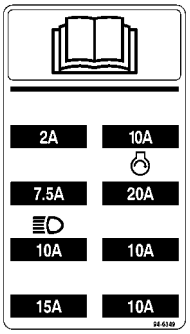

INSIDE CONTROL BOX
(Part No. 94–6349)
Fuse Locations

ON LEFT FENDER
(Part No. 93–6680)
Diesel Fuel Only

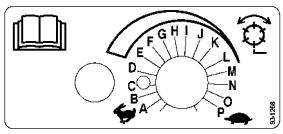

INSIDE CONTROL BOX
(Part No. 93–1268)
Operating Instructions
H.O.C. Selector

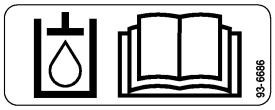

ON RIGHT FENDER
(Part No. 93–6686)
Hydraulic Oil Only

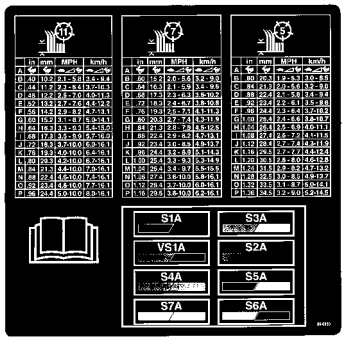

UNDER SEAT PLATE
(Part No. 98–8110)
Selecting Clip Rate & Solenoid
Wire Identification

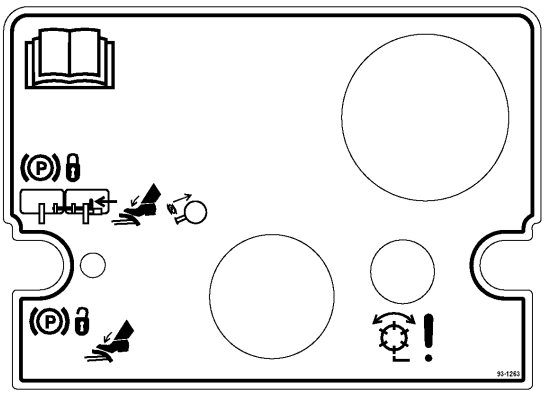

ON TOP OF STEERING TOWER
(Part No. 93–1263)
Brake Operation & reel Control Lamp

SAFETY AND INSTRUCTION DECALS

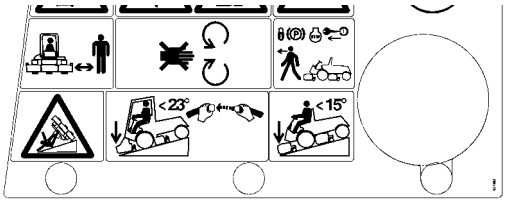

ON TOOL BOX
(Part No. 93−1262)
WARNING: Read Operating & Safety Instructions

ON REAR FOOT PANEL
(Part No. 93−6668)
WARNING: Read Safety Instructions

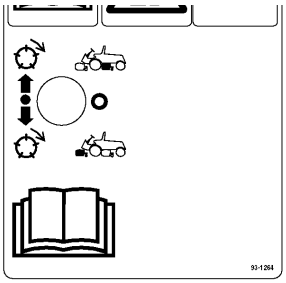

ON BACKLAP BRACKET
(Part No. 93−1264)
WARNING: Read Backlap, Op
& Safety Instructions

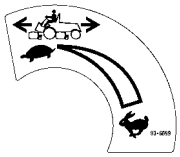

ON TOWER
(Part No. 93−6699)
Mowing Speed Control

ON FRONT PANEL BE-
LOW SEAT
(Part No. 93−9425)
High Pressure Hydraulic Hoses

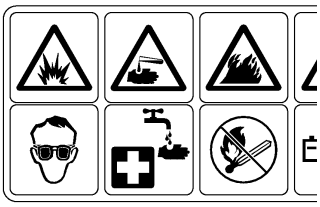

ON BATTERY
(Part No. 93−7276)
WARNING: Read Safety Instructions

ON LIFT ARMS
(Part No. 93−6687)
Do Not Step

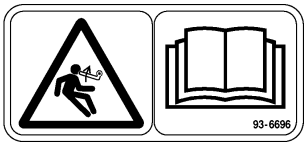

ON REAR LIFT ARMS
(Part No. 93−6696)
Rising Lift Arms

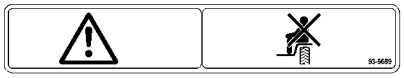

ON CONSOLES
(Part No. 93−6689)
WARNING: No Riders

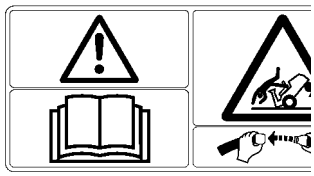

ON ROLL BAR ROO
(Part No. 93−8050)
(Model 03804 only)
WARNING: Fasten Seat

ON FAN SHROUD
(Part No. 93−6681)
Warning: Rotating Fan
Do Not Touch!

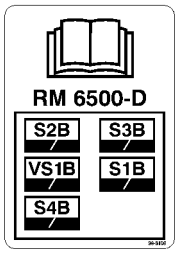

ON UNDERSIDE OF SEAT PLATE
(Part No. 98−8108)
Solenoid Wire Identification

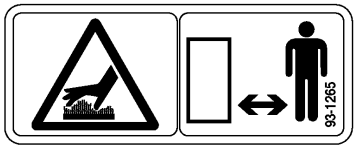

ON FRAME UNDER
MUFFLER
(Part No. 93−1265)
WARNING: Hot Surface
Do Not Touch!

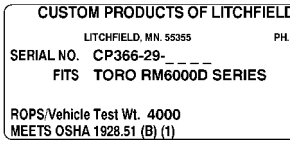

ON ROLL BAR
(Part No. 92−754
(Model 03804 only
ROPS Serial Tag

SPECIFICATIONS

Engine: Peugeot, 4 cylinder, 4 cycle, overhead cam, 116 cu. in (1.9 liter) displacement liquid cooled diesel engine. 38 hp (28 kW); governed to 2500 rpm high idle; 23.5:1 compression ratio, 3.27” (83 mm) bore x 3.46” (88 mm) stroke. Automatic glow plug/starter interlock system. Heavy duty, 2 stage, remote air cleaner.

Main Frame: All welded formed steel frame, includes tie−down loops.

Cooling System: Rear−mounted, cross−flow agricultural type radiator; 7 fins per inch. Approx. 7.5 quart (7.1 liter) capacity. Air to oil cooler mounted to rear of radiator tips outward for cleaning. Removable oil cooler/radiator screen.

Fuel System: Rotary fuel injection pump with energized−to−run (ETR) fuel flow solenoid. Replaceable spin−on fuel filter/water separator with water sensor. Fuel capacity: 15 gallon (64 liter).

Traction System: Servo−controlled hydrostatic system driving double planetary gear reduction front wheel drives. Foot pedal control of forward/reverse ground speed.
Toro 4−Matic® 4−Wheel Drive System only: Rear drive axle coupled to hydrostatic transmission via overrunning clutch for full time on−demand 4 wheel drive. A Roll Over Protective Structure (ROPS) and seat belt are standard.

Ground Speed: 0−10 mph forward; 0−4 mph reverse.

Cutting Unit Drive System: Reel motors feature quick disconnect for removal or installation onto cutting unit. Cutting units can be driven from either end.

Seat: Deluxe high back suspension seat with adjustable fore and aft travel, weight and height. Tool box at left side of seat.

Steering System: Power steering with dedicated power source.

Tires: Two rear steering tires: 20 x 10.00-10, tubeless, 6-ply rating. Two front traction drive tires: 29 x 14.00-15 tubeless, 6-ply rating. Recommended tire pressure for front and rear tires is 15−20 psi.

Brakes: Individual totally enclosed, multi−disc, wet brakes and parking brakes on front traction wheels. Hydrostatic braking through traction drive.

Electrical Features: 12 volt, 530 cold cranking amperes at 0° F (−18° C), 85 minute reserve capacity at 80° F (27° C), maintenance free battery. 55 amp alternator with I.C. regulator/rectifier. Automotive type electrical system. Seat switch, reel and traction interlock switches.

Controls: Foot operated traction and brake pedals. Hand operated throttle, speed control lever, parking brake lock, ignition switch with automatic preheat cycle, single joy stick control for cutting unit on/off and lift lower. Cutting unit backlap switch located under operator’s seat. Height−of−cut selector knob located under control panel.

Gauges: Hour meter, speedometer, fuel gauge, temperature gauge, 4 bank warning lamp: oil pressure, water temperature, amps, and glow plug. 2 bank warnlng lamp: water in fuel, water level.

Diagnostics; The Automatic Control Electronics, ACE™ system allows precise timing and control of machine functions for maximum reliability. Optional diagnostic display connects to an electronic control unit to pin point any electrical problems quickly and easily. Available DATA LOG™ system allows mechanic to find intermittent problems.

General Specifications (approx.):

Width−of−Cut:	96 in.
Overall Width:	
Transport	89 in.
Operational	110 in.
Overall Length:	120 in.
Height:	
Without ROPS installed:	60 in.
With ROPS installed:	84 in.
Weight:	
Model 03803	3200 lbs.*
Model 03804	3300 lbs.*

*With 5 Blade Cutting Units & full fluid levels

Optional Equipment

5 Blade Cutting Unit (7 in.)	Model No. 03860
7 Blade Cutting Unit (7 in.)	Model No. 03861
11 Blade Cutting Unit (7 in.)	Model No. 03862
Dethatching Cutting Unit	Model No. 03871
Grass Basket Kit	Model No. 03882
High Torque Reel Motor	Part No. 98−9998
Full Front Roller	Part No. 93−3040
Wiehle Roller Scraper	Part No. 95−7729
Rear Roller Scraper Kit	Part No. 100−4970
Shoulder Wiehle Scraper	Part No. 99−8670
Full Front Roller Scraper	Part No. 99−8668
Low Height−of−Cut Bedknife	Part No. 93−9774*
Gauge Bar Assembly	Part No. 98−1852
Angle Indicator	Part No. 99−3503
Backlapping Brush Assembly	Part No. TOR299100
Bedknife Screw Tool	Part No. TOR510880
Cutting Unit Tool Kit	Part No. TOR4070
Reel Drive Shaft	Part No. TOR4074

* For height−of−cut below .5” (13 mm)

Specifications and design subject to change without notice.

LOOSE PARTS CHART

Note: Use this chart as a checklist to assure all parts necessary for assembly have been received. Without these parts, total set-up cannot be completed. Some parts may have already been assembled at factory.

DESCRIPTION	QTY.	USE
Counterweight Counterweight w/speed sensor O–ring–large Speed Sensor O–ring–small Speed Sensor holder Capscrew M6 x 20 mm	3 2 10 2 2 2 2	Mount counterweights & motors to cutting units
Lynch Pin Steering Pin	5 5	Mount cutting units to traction unit
Diagnostic ACE Display Overlay (1)	1	Use for diagnosing machine malfunctions (Store in service shop until needed)
Key	1	Use with hood lock
Key Ring	1	Contain keys
Gauge Bar Screws Wing Nuts	1 2 2	Use to set cutting units
EEC Decals	2	
EEC Certificate	2	
Operator Video	1	View before operating machine
Operator's Manual (Traction Unit)	2	Read before operating machine.
Parts Catalog	1	
Registration Card	1	Fill out and return to Toro

SET–UP INSTRUCTIONS

IMPORTANT: All Reelmaster 6000 Series must have the on–board controller (ECU) configured for the installed cutting units, otherwise the cutting unit drive circuits will not function. Refer to configuration instructions in this manual.

INSTALL CUTTING UNITS (Fig. 2–5)

Cutting unit models 03860, 03861, and 03862 can be installed at any of the five mounting locations on the traction unit. Figure 1 shows the orientation of the hydraulic drive motor for each of the five locations. For any of the locations requiring the motor to be mounted on the right end of the cutting unit, install a counter weight on the left end of the cutting unit. For the locations requiring the motor to be mounted on the left end, install a counter weight on the right end of the cutting unit.

Two of the counter weights provided with the tractor include reel speed sensor assemblies. These need to be installed on cutting units to be mounted in the front center and left rear positions on the tractor.

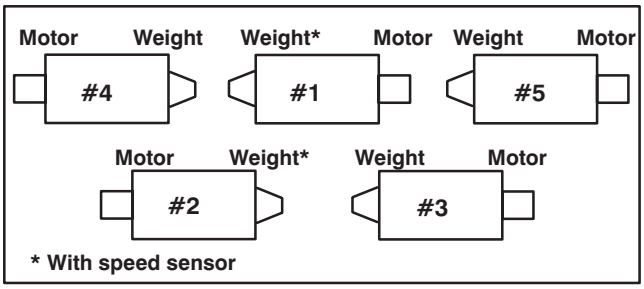

Figure 2

Note: Counter weight mounting capscrews are shipped installed on the right bearing housing of the cutting units. The capscrews on left bearing housing are to be used for securing the hydraulic motor.

1. Remove cutting units from cartons. Assemble and adjust per Cutting Unit Operator's Manual.

2. Remove protective plugs from each end of cutting unit.

3. Lubricate and install a large O−ring into bearing housing groove on each end of cutting unit (Fig. 3 & 5).

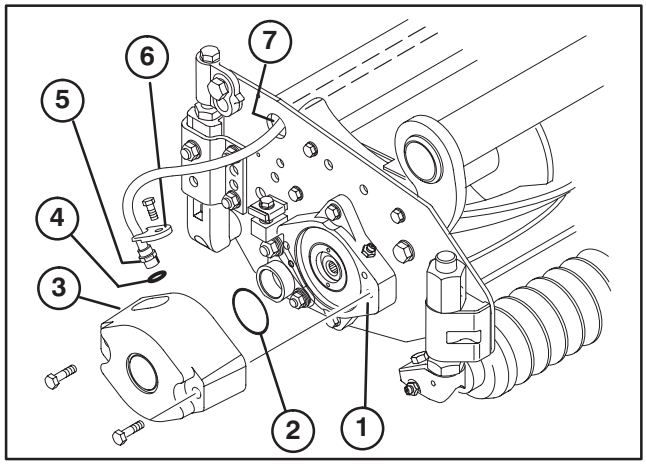

Figure 3

1. Bearing housing
2. O−ring−large
3. Counterweight
4. O−ring −small
5. Speed sensor
6. Speed sensor holder
7. Frame tube

Note: Before installing cutting unit motors or counterweights with speed sensors, lubricate internal splines of cutting unit reel shafts with grease.

4. Install a counter weight onto appropriate end of each cutting unit with capscrews provided (Fig. 3).

5. Thoroughly grease the cutting unit reel bearings prior to installation on the traction unit. Grease should be evident at the inboard reel seals. Refer to Cutting Unit Operator's Manual for greasing procedure.

6. Insert a thrust washer onto horizontal shaft of pivot knuckle as shown in figure 4.

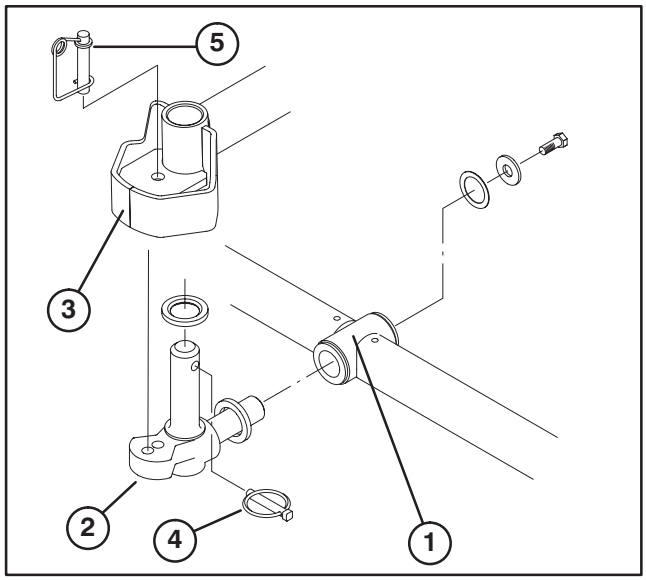

Figure 4

1. Carrier frame
2. Pivot knuckle
3. Lift arm steering plate
4. Lynch pin
5. Steering pin

7. Insert the horizontal shaft of the pivot knuckle into the mounting tube of the carrier frame (Fig. 4).

8. Secure pivot knuckle to carrier frame with a thrust washer, flat washer and a flange head capscrew (Fig. 4).

9. Insert a thrust washer onto vertical shaft of pivot knuckle (Fig. 4).

10. Insert the vertical shaft of the pivot knuckle into lift arm pivot hub (Fig. 4). Guide the pivot knuckle in place between the two rubber centering bumpers in the under side of the lift arm steering plate.

11. Insert the lynch pin into the cross hole on the pivot knuckle shaft (Fig. 4).

12. Mount the motor to the drive end of the cutting unit and secure with two capscrews provided (Fig. 5).

13. On front center and left rear cutting units, plug speed sensor wire harness connector into traction unit wire harness connector.

14. On motor side of cutting unit, insert speed sensor end of harness through cutting unit rear frame tube and route to counterweight.

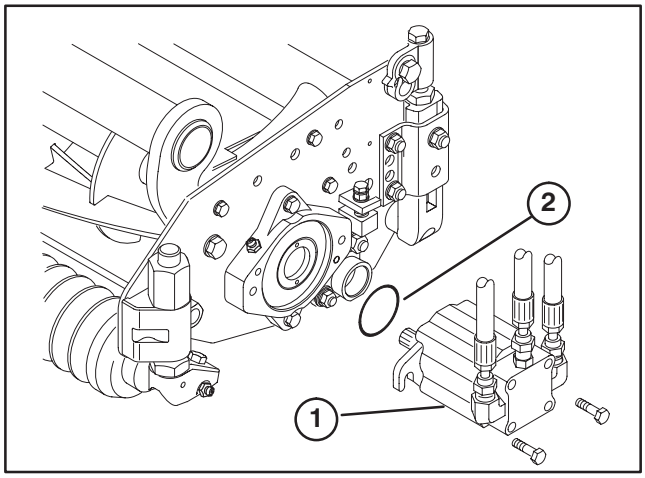

Figure 5

1. Motor
2. O−ring

15. Install small O−ring onto speed sensor and insert sensor into hole in counterweight (Fig. 3).

16. Secure sensor to counterweight with a sensor holder and a M6 x 20 mm capscrew (Fig. 3).

17. If fixed cutting unit position is required, insert steering pin into pivot knuckle mounting hole (Fig. 4)

18. Hook spring wire around bottom of steering pin (Fig. 4).

CUTTING UNIT SELECTION

The Controller must be programmed with the Blade configuration (number of Blades) on the installed cutting units in order for the ClipAce™ feature to operate properly. If the Blade configuration is not set, the cutting units will not operate in the mow position.

IMPORTANT: Do not sit in the seat. Closed Seat Switch will void this procedure!

1. Rotate ignition key to **Off** position.

2. Connect the Hand held Diagnostic Tool to the Controller Loopback Connector (remove overlays).

3. Turn the Reel Control Switch to **Enable** position.

4. Move the Joystick to the **Lower** position and hold.

5. Turn ignition key to **On** position and continue to hold the Joystick in the **Lower** position until the Reel Control Lamp starts to flash (2 seconds).

6. Release the Joystick to the center position. Reel Control Lamp will now be on steady.

7. Toggle Diagnostic Tool to display **Outputs**.

8. Cycle the Joystick to the **Lower** position once for each blade on the installed cutting units (e.g. 5 times for 5 blades, 8 times for 8 blades, etc..). **Wait for Reel Control Lamp to come back on before each cycle.** Hand held Diagnostic Tool will display the number of times the Joystick has been cycled.

9. Turn Reel Control Switch to the **Disable** position. Reel Control Lamp will now flash the number of blades the Controller has been programmed for, then go out. The Hand held Tool will also display the Blade configuration programmed.

10. Turn the key **Off** and disconnect Diagnostic Tool. Reconnect Loopback Connector. **Blade configuration is now set.**

Note: Skip step 8 when verifying Blade configuration in the field.

ALTERNATE ADJUSTMENTS

Tractors are setup at the factory appropriately for most fairway mowing applications.

The following adjustments are available for fine–tuning of the machine to the application:

Adjust Turf Compensation Spring

The Turf Compensation Spring (Fig. 6), connecting carrier frame to cutting unit, controls the amount of fore–aft rotation available, as well as the amount of ground clearance in transport and turn around.

The Turf Compensation Spring also transfers weight from the front to rear roller. This helps to reduce a wave pattern in the turf, also known as bobbing.

IMPORTANT: Make spring adjustments with cutting unit mounted to traction unit and lowered to shop floor. Refer to Traction Unit Operator's Manual for mounting instructions.

1. Tighten lock nut on rear of spring rod until the gap (C) between rear of spring bracket and front of washer is 1–1/2" (38 mm) (Fig. 6).

2. Tighten hex nuts on front end of spring rod until the compressed length (A) of spring is 8" (203 mm) (Fig. 6).

NOTE: When cutting rough or undulating turf, increase compressed length (A) of spring to 8–1/2" (216 mm) and gap (C) between rear of spring bracket and front of washer to 2" (51 mm) To attain this adjustment, spring rod must be unthreaded from rod end approximately 1/2" (Fig. 6).

NOTE: As compressed spring length (A) DECREASES, weight transfer from front roller to rear roller INCREASES and carrier frame/cutting unit rotation angle (B) DECREASES.

NOTE: As gap (C) between spring bracket and washer INCREASES, cutting unit ground clearance DECREASES and carrier frame/cutting unit rotation angle (B) INCREASES.

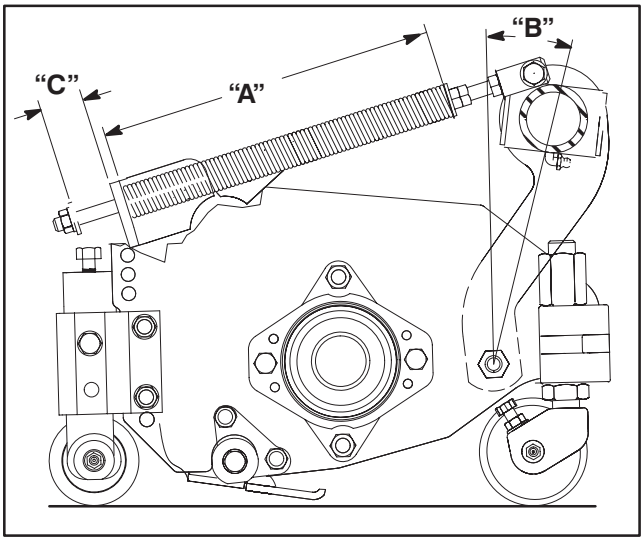

Figure 6

Adjusting Cutting Unit Lowering Rate (Outer front cutting units only– #4 & #5) (Fig. 7)

The cutting unit lift circuit is equipped with a adjustable valve to ensure the front cutting units lower evenly. Adjust as follows:

1. Run traction unit until operating temperature is reached.

2. Locate valve under seat.

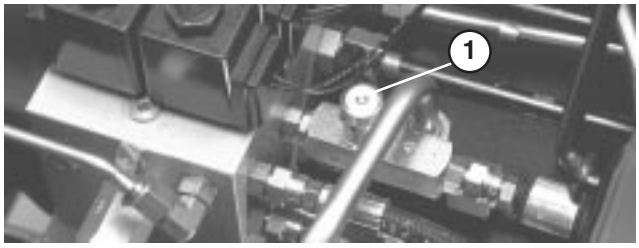

Figure 7
1. Cutting unit adjustment valve

2. Loosen setscrew on valve. Rotate valve clockwise to slow down drop rate of front outside cutting units.

3. Verify lift rate adjustment by raising and lowering cutting units several times. Readjust as required.

4. After desired lift rate is attained, tighten set screw to lock adjustment.

Lifted Height of Outer Front Cutting Units (Enable Position)

The turnaround height of the front outer cutting units (#4 & #5) may be increased to provide additional ground clearance on contoured fairways. Contact your distributor for assistance.

Adjusting the Travel of the Front Three Cutting Units

Additional downward travel of the front three cutting units may be desirable in highly contoured locations. If any of the front three cutting units lift off the ground when cresting a “hill”, the front carrier frame may be lowered by removing mounting bolts and repositioning frame in the bottom set of holes in the main frame (Fig. 8). Contact your distributor for assistance.

Note: Moving the carrier frame down will decrease the amount of clearance between the cutting units and the ground in turnaround and transport positions and may require adjusting the lift chain length on the cutting unit.

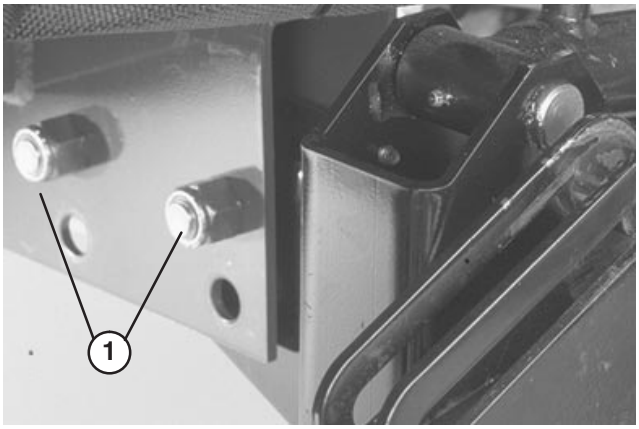

Figure 8

1. Carrier frame mounting bolts

REAR BALLAST

Model 03803 (2 Wheel Drive) complies with the ANSI B71.4–1990 Standard when 100 lbs. of calcium chloride ballast is added to rear wheels and rear weight kit (Part No. 94–2836) is installed.

Model 03804 (4 Wheel Drive) complies with the ANSI B71.4–1990 Standard when 100 lbs. of calcium chloride ballast is added to rear wheels.

IMPORTANT: If a puncture occurs in a tire with calcium chloride, remove unit from turf area as quickly as possible. To prevent possible damage to turf, immediately soak affected area with water.

CAUTION

Before servicing or making adjustments to the machine, stop engine and remove key from the switch.

CHECK ENGINE OIL (Fig. 9 & 10)

Crankcase capacity is 5.3 qt. with filter.

1. Park machine on a level surface. Release hood latch and open hood.

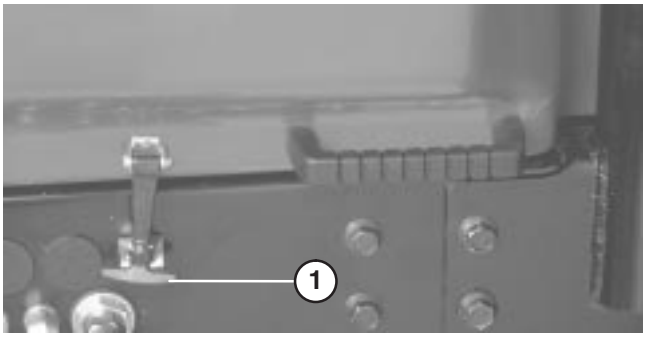

Figure 9
1. Hood Latch

2. Remove dipstick from tube cap, wipe clean and reinstall dipstick into tube cap. Pull it out again and check oil level on dipstick: Oil level must always be in notch area on dipstick.

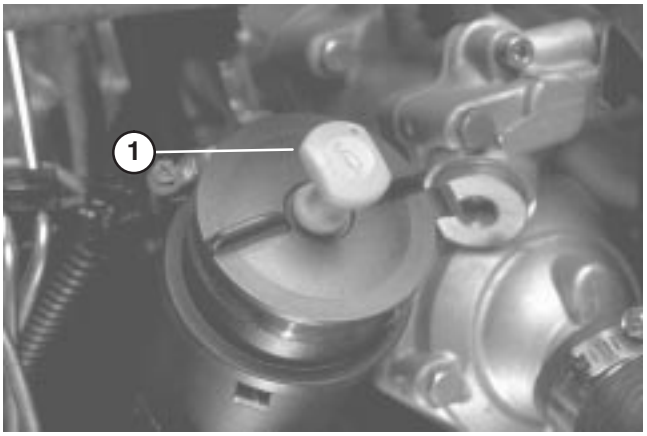

Figure 10
1. Dipstick / Tube Cap

3. If oil level is low, remove tube cap and add SAE 15W−40 CD, CE, CF, CF−4 or CG−4 oil until level reaches top of notch on dipstick. DO NOT OVERFILL.

4. Install oil tube cap.

5. Close hood and secure latch.

CHECK COOLING SYSTEM (Fig. 11)

Capacity of system is 3.5 gal.

Check cooling system if low water level light illuminates.

1. Park machine on a level surface. Release hood latch and open hood.

2. Remove degasser tank cap and check coolant level. **Coolant level should be up to or above tabs In degasser tank, when engine is cold.**

CAUTION

If engine has been running, pressurized hot coolant can escape if degasser cap is removed and cause burns. Allow engine to cool at least 15 minutes or until the degasser cap is cool enough to touch without burning hand.

Figure 11
1. Degasser Tank

3. If coolant is low, remove degasser tank cap and add a 50/50 mixture of water and Peugeot recommended anti−freeze (Toro Part No. 93−7213). **DO NOT USE WATER ONLY OR ALCOHOL/METHANOL BASE COOLANTS.**

4. Install degasser tank cap.

5. Close hood and secure latch.

FILL FUEL TANK (Fig. 12)

Capacity of fuel tank is 15 gal.

1. Remove fuel tank cap.

2. Fill tank to about one inch below top tank, not filler neck with No. 2 diesel fuel. Then install cap.

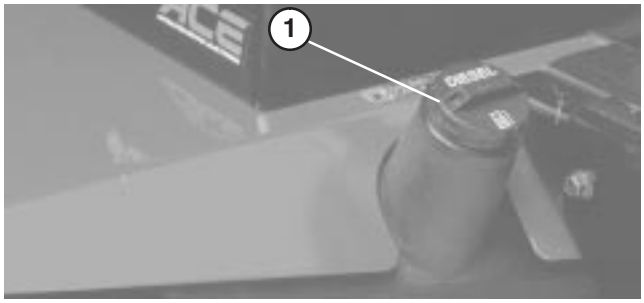

Figure 12
1. Fuel Tank Cap

DANGER

Because diesel fuel is flammable, use caution when storing or handling it. Do not smoke while filling the fuel tank. Do not fill fuel tank while engine is running, hot, or when machine is in an enclosed area. Always fill fuel tank outside and wipe up any spilled diesel fuel before starting the engine. Store fuel in a clean, safety−approved container and keep cap in place. Use diesel fuel for the engine only; not for any other purpose.

CHECK HYDRAULIC FLUID (Fig. 13)

The hydraulic system is designed to operate on anti−wear hydraulic fluid. The machines reservoir is filled at the factory with approximately 8.5 gallons of Mobil 15M hydraulic fluid. **Check level of hydraulic fluid before engine is first started and daily thereafter.** Appropriate hydraulic oils are listed below.

Group 1 Hydraulic Fluid (Moderate climate− average duty)

Note: The fluids within this group are interchangeable.

ISO VG 46/68 multi-viscosity anti-wear hydraulic fluid

Mobil	DTE 15M
Amoco	Rykon Premium ISO 46
Castrol	AWH 46
Conoco	Hydroclear AW MV46
Gulf	Harmony HVI 46 AW
Kendall	Hyken Golden MV SAE 5W-20
Pennzbell	AWX MV46
Phillips	Magnus A KV 5W-20
Shell	Tellus T 46
Sunoco	Sun Hyd. Oil 2105
Texaco	Rando HDZ 46

Universal Tractor Hydraulic Fluid

Mobil	Mobilfluid 424
Amoco	1000 Fluid
Chevron	Tractor Hydraulic Fluid
Conoco	Hydroclear Powertran
Esso	Hydraul
Gulf	Universal Tractor Fluid
Kendall	Hyken 052
Marathon	Marafluid Super HT
Pennzoil	Hydra-trans
Phillips	HG Fluid
Shell	Donax TD
76 Lubricants	Hydraulic/Tractor Fluid
Sunoco	TH Fluid
Texaco	TDH

Group 2 Hydraulic Fluid (Hot Climate− Heavy Duty)

Note: The fluids within this group are interchangeable.

ISO VG 68 anti-wear hydraulic fluid

Mobil	DTE 26
Amoco	Rykon AW No. 68
Castrol	AWS 68
Chevron	Hydraulic Oil AW ISO 68
Conoco	Hydroclear AW 68
Exxon	Nuto H 68
Gulf	Harmony 68AW
Kendall	Four Seasons AW 68
Marathon	ISO 68
Pennzbell	AW Hydraulic Oil 68
Phillips	Magnus A ISO 68
Shell	Tellus 68
76 Lubricants	AW 68
Sunoco	SunVis 868
Texaco	Rando HD 68

IMPORTANT: Group 1 fluids are recommended for use at typical ambient temperatures of 32°F (0°C) to 105°F (41°C). The ISO Type 46/48 fluid has been found to offer optimal performance in a wide range of temperature conditions for the average user. The Universal Tractor Fluids offer similar performance for those who prefer them, with perhaps some slight loss of efficiency at high ambient temperatures compared to the Type 46/48 fluids.

Group 2 fluids are recommended for heavy-duty use in hot climates where ambient temperatures range from about 70°F (20°C) to 120°F (49°C). Use at lower ambient temperatures may result in hard starting, increased engine laboring while cold, sluggish or non-operating spool valves while cold and high filter back-pressure due to the higher viscosity of these fluids.

Note: When changing from one type of hydraulic fluid to another, be certain to remove all the old fluid from the system, as some fluids are incompatible with others.

Group 3 Hydraulic Fluid (Biodegradable)

ISO VG 32/46 anti-wear hydraulic fluid

Mobil	EAL 224H

Note: This biodegradable hydraulic fluid is not compatible with the fluids in Group 1 and 2.

Note: When changing from standard fluid to the biodegradable type, be certain to follow approved flushing procedures as published by Mobil. Contact your local Toro Distributor for details.

IMPORTANT: Use only types of hydraulic fluids specified. Other fluids could cause system damage.

Note: A red dye additive for the hydraulic system fluid is available in 2/3 oz. bottles. One bottle is sufficient for 4−6 gal. of hydraulic fluid. Order Part No. 44−2500 from your Authorized Toro Distributor

1. Position machine on a level surface, lower the cutting units and stop the engine.

2. Clean area around filler neck and cap of hydraulic tank. Remove cap from filler neck.

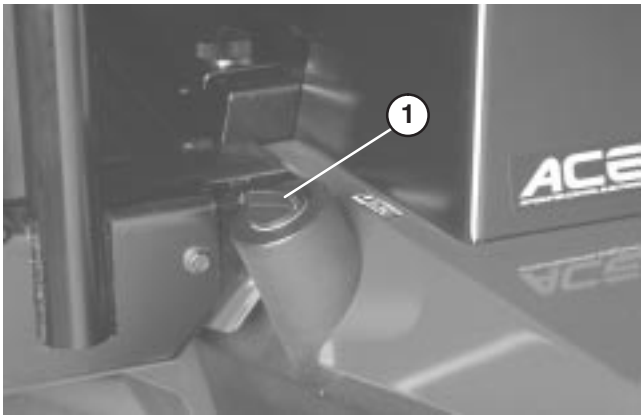

Figure 13
1. Hydraulic Tank Cap

3. Remove dipstick from filler neck and wipe it with a clean rag. Insert dipstick into filler neck; then remove it and check level of fluid. Fluid level should be within 1/4 inch of mark on dipstick.

4. If level is low, add appropriate fluid to raise level to full mark.

5. Install dipstick and cap onto filler neck.

CHECK PLANETARY GEAR DRIVE OIL (Fig. 14)

Check oil if external leakage is noted. Use high quality SAE 85W−140 wt. gear lube as replacement.

Capacity of system is 16 oz.

1. With machine on level surface, position wheel so the check/drain plug is at either three or nine o'clock position.

2. Remove plug. Oil should be at the bottom of the hole.

3. Add gear oil, if necessary, to bring up to proper level and install plug.

4. Repeat steps 1−3 on the opposite gear assembly.

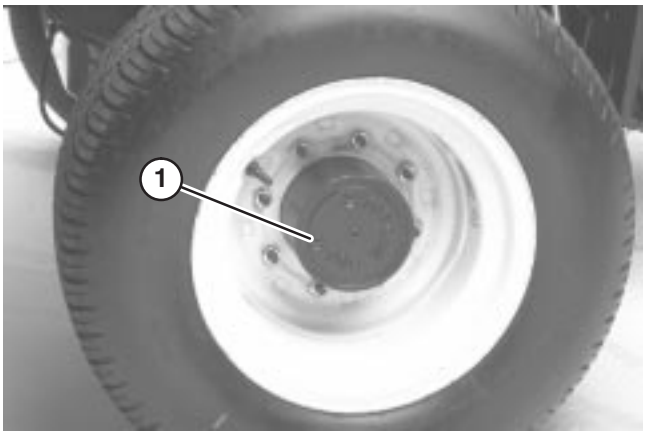

Figure 14
1. Check/Drain Plug

CHECK REAR AXLE LUBRICANT (Model 03804 Only) (Fig. 15)

The rear axle is shipped from the factory filled with SAE 85W−90 wt. gear lube. Check level before engine is first started and every 400 hours thereafter. Capacity is 80 oz. Visually inspect for leaks daily.

1. Position the machine on a level surface.

2. Remove a check plug from one end of axle and make sure lubricant is up to bottom of hole. If level is low, remove the fill plug and add enough lubricant to bring the level up to the bottom of the check plug holes.

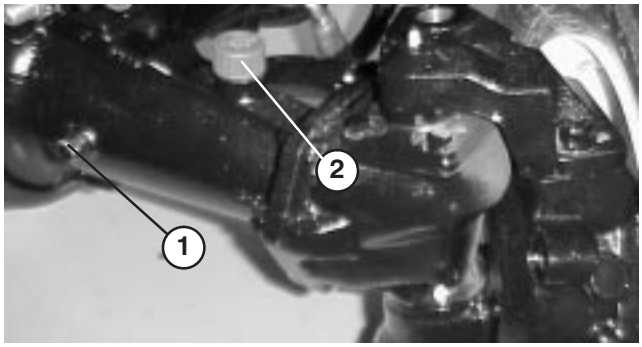

Figure 15
1. Check Plug 2. Fill Plug

CHECK TIRE PRESSURE

The tires are over−inflated for shipping. Therefore, release some of the air to reduce the pressure. Correct air pressure in the front and rear tires is 15 −20 psi.

IMPORTANT: Maintain even pressure in all tires to assure a good quality−of−cut and proper machine performance. DO NOT UNDER INFLATE.

CHECK REEL TO BEDKNIFE CONTACT

Each day before operating, check reel to bedknife contact, regardless if quality of cut had previously been acceptable. There must be light contact across the full length of the reel and bedknife (refer to Adjusting Reel to Bedknife in Cutting Unit Operator's Manual).

CHECK TORQUE OF WHEEL NUTS OR BOLTS

WARNING

Torque front wheel nuts and rear wheel bolts to 85-100 ft−lb after 1-4 hours of operation and again after 10 hours of operation and every 200 hours thereafter. Failure to maintain proper torque could result in failure or loss of wheel and may result in personal injury.

KNOW YOUR CONTROLS

Traction Pedal (Fig. 16) – Controls forward and reverse operation. Depress top of pedal to move forward and bottom to move backward. Ground speed depends on how far pedal is depressed. For no load, maximum ground speed, fully depress pedal while throttle is in FAST.
To stop, reduce foot pressure on traction pedal and allow it to return to center position.

Forward Speed Limiter (Fig. 16) – Preset this lever to limit the amount the traction pedal can be depressed in the forward direction to maintain a constant mowing speed.

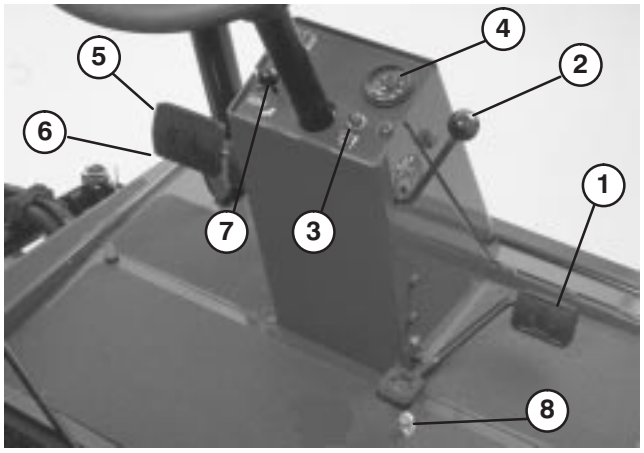

Figure 16

1. Traction Pedal
2. Forward Speed Limiter
3. Reel Control Light
4. Speedometer
5. Brake Pedals
6. Parking Brake Latch
7. Locking Pin
8. Reverse Speed Limiter

Reel Control Light (Fig. 16) – When lit steady, it indicates machine is being operated in a way in which the automatic reel speed control cannot obtain the desired clip.

Speedometer (Fig. 16) – Indicates ground speed at which machine is traveling.

Brake Pedals (Fig. 16) – Two foot pedals operate individual wheel brakes for turning assistance, parking and to aid in obtaining better sidehill traction. Locking pin connects the pedals for parking brake operation and transport.

Parking Brake Latch (Fig. 16) – A knob on the left side of console actuates parking brake lock. To engage parking brake, connect pedals with locking pin, push down on both pedals and pull parking brake latch out. To release parking brake, depress both pedals until parking brake latch retracts.

Reverse Speed Limiter (Fig. 16) –Adjust screw to limit the amount the traction pedal can be depressed in the rearward direction to limit speed.

Lower Mow / Raise Control Lever (Joystick) (Fig. 17) – The lever raises and lowers the cutting units and also starts and stops the reels.

Fuel Gauge (Fig. 17) – Indicates level of fuel in tank.

Engine Oil Pressure Warning Light (Fig. 17) – Indicates dangerously low engine oil pressure.

Key Switch (Fig. 17) – Three positions: OFF, ON / Preheat and START.

WARNING

Engine will not crank over until Glow Plug lamp goes out (Delay Interlock). Glow plugs must complete cycle before controller will allow engine to crank.

Throttle Control (Fig. 17) – Move control forward to increase engine speed, rearward to decrease speed.

Engine Coolant Temperature Warning Light (Fig. 17) – The light illuminates and engine shuts down when coolant reaches a dangerously high temperature.

Glow Plug Indicator Light (Fig. 17)– When lit, indicates glow plugs are on.

Charge Indicator (Fig. 17) – Illuminates when system charging circuit malfunctions.

Enable / Disable Switch (Fig. 17) – Used in conjunction with lower mow / raise control lever (Joystick) to operate reels. Reels can be raised but not lowered when in mid position.

Water in Fuel Light (Fig. 17) – Indicates water in fuel system.

Low Water Level Light (Fig. 17) – Indicates coolant water level is low.

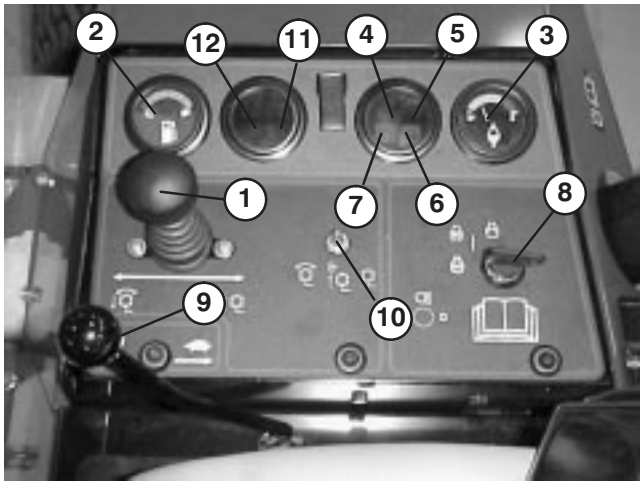

Figure 17

1. Lower Mow / Raise Control Lever
2. Fuel Gauge
3. Engine Coolant Temperature Gauge
4. Engine Oil Pressure Warning Light
5. Engine Coolant Temperature Warning Light
6. Glow Plug Indicator Light
7. Charge Indicator
8. Key Switch
9. Throttle Control
10. Enable / Disable switch
11. Water in Fuel Light
12. Low Water Level Light

KNOW YOUR CONTROLS

HOC Selector Knob (Fig. 18) – Rotating knob to appropriate setting informs the electronic controller at what height–of–cut the cutting units are set at so the desired clip may be obtained. See Automatic Clip Control section in manual for additional information. Knob is located under control panel.

Hour Meter (Fig. 18) – Shows total hours that machine has been operated.

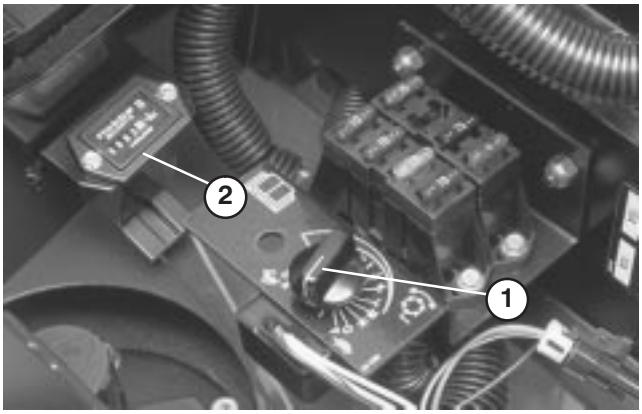

Figure 18
1. HOC Selector Knob
2. Hour Meter

Backlap Switch (Fig. 19) – Used in conjunction with lower mow / raise control lever for backlapping operation. Switch is located under seat plate. Refer to Cutting Unit Maintenance, Backlapping.

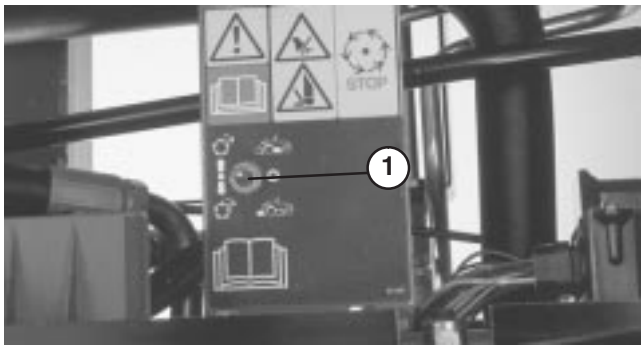

Figure 19
1. Backlap Switch

Seat (Fig. 20) – Seat adjusting lever allows 4 inch fore and aft adjustment. Seat adjusting knob adjusts seat for operators weight. To adjust seat fore and aft, pull lever on left side of seat assembly outward. After moving seat to desired location, release lever to lock seat into position. To adjust for operators weight, turn spring tension knob; clockwise to increase tension, counterclockwise to decrease spring tension

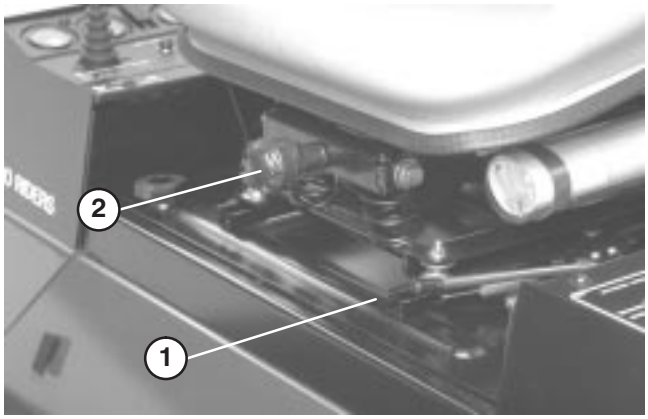

Figure 20
1. Seat Adjusting Lever
2. Seat Adjusting Knob

CAUTION

Before servicing or making adjustments to the machine, stop engine and remove key from the switch.

STARTING AND STOPPING

1. Sit on the seat, keep foot off traction pedal. Assure parking brake is engaged, traction pedal is in NEUTRAL, throttle is in SLOW position and the ENABLE / DISABLE switch is in the DISABLE position.

WARNING

Engine will not crank over until Glow Plug Lamp goes out (Delay in Interlock). Glow plugs must complete cycle before controller will allow engine to crank.

2. Turn ignition switch to ON / Preheat position. An automatic timer will control preheat for approximately 6 seconds. **Engine will not crank over until preheat light goes off.** After preheat, turn key to START position. CRANK ENGINE FOR NO LONGER THAN 15 SECONDS. Release key when engine starts. If additional preheat is required, turn key to OFF position then to ON / preheat position. Repeat process as required.

3. Run engine at idle speed or partial throttle until engine warms up.

4. To stop, move all controls to NEUTRAL and set parking brake. Return throttle to the idle position, turn key to OFF and remove it from switch.

Note: Toro recommends that anytime the machine is parked (short or long term) the cutting units should be lowered to the ground. This relieves pressure from the lift circuit and eliminates the risk of the cutting units accidentally lowering to the ground.

PRIMING FUEL SYSTEM (Fig. 21 & 22)

IMPORTANT: The fuel system may need to be primed when a new engine is started for the first time, if it runs out of fuel or if maintenance is performed on the fuel system.

1. Unlatch and raise hood.

2. Insert a 3/16” hose over bleed screw and run other end into a container to catch fuel.

3. Loosen fuel filter / water separator bleed screw (Fig. 21) a few turns. Pump priming plunger until a steady stream of fuel comes out of hole in bleed screw. When fuel stops foaming, tighten the bleed screw during the downstroke of the priming plunger. Wipe up any spilled fuel.

4. Pump priming plunger until resistance is felt. Try to start engine. If engine does not start repeat step 3.

Note: It may be necessary to bleed the air out of the fuel line between the fuel filter / water separator and the injection pump. To do this, loosen the fitting on the injection pump (Fig. 22) and repeat bleeding procedure.

Figure 21
1. Primer Plunger 2. Bleed Screw

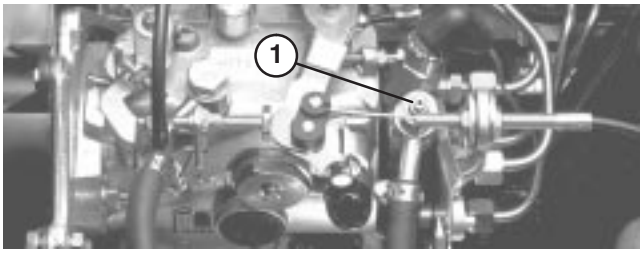

Figure 22
1. Injection Pump Fitting

AUTOMATIC CLIP CONTROL

The RM 6500–D is equipped with an electronic controller which is programmed to achieve automatic clip control. The machine will automatically adjust the reel speed to attain the desired clip as the traction speed changes. In order for the controller to know what clip is desired, the on–board controller needs to know what cutting units have been installed (5, 7 or 11 blade) and the height–of–cut.

By programming the controller (Refer to Cutting Unit Selection in Set Up Instructions) and adjusting the H.O.C. Selector Knob (under console), the machine will be able to adjust the clip rate to the traction speed automatically.

The range of possible reel speeds is a minimum of about 500 RPM and a maximum of about 1400 RPM. As long as the desired clip requires a reel speed within this range, the machine will maintain the desired clip. If the traction speed is too slow or too fast to allow the desired clip, the Reel Control light (on the front steering tower) will illuminate, indicating that the desired clip is not being maintained. For example, if the traction speed is zero, the reels will still run at the minimum speed of about 500 RPM, which will result in a clip smaller than desired and cause the Reel Control light to illuminate. The approximate ranges of traction speed which will result in the desired clip are as follows for the listed possible heights of cut:

	in	mm	MPH	km/h
A				
B	.40	10.2	2.1 - 5.8	3.4 - 9.4
C	.44	11.2	2.3 - 6.4	3.7-10.3
D	.48	12.2	2.5 - 7.0	4.0-11.3
E	.52	13.2	2.7 - 7.6	4.4-12.2
F	.56	14.2	2.9 - 8.2	4.7-13.1
G	.60	15.2	3.1 - 8.7	5.0-14.1
H	.64	16.3	3.3 - 9.3	5.4-15.0
I	.68	17.3	3.5 - 9.9	5.7-16.0
J	.72	18.3	3.7-10.0	6.0-16.1
K	.76	19.3	4.0-10.0	6.4-16.1
L	.80	20.3	4.2-10.0	6.7-16.1
M	.84	21.3	4.4-10.0	7.0-16.1
N	.88	22.4	4.6-10.0	7.4-16.1
O	.92	23.4	4.8-10.0	7.7-16.1
P	.96	24.4	5.0-10.0	8.0-16.1

	in	mm	MPH	km/h
A				
B	.60	15.2	2.0 - 5.6	3.2 - 9.0
C	.64	16.3	2.1 - 5.9	3.4 - 9.6
D	.68	17.3	2.3 - 6.3	3.6-10.2
E	.72	18.3	2.4 - 6.7	3.8-10.8
F	.76	19.3	2.5 - 7.1	4.1-11.3
G	.80	20.3	2.7 - 7.4	4.3-11.9
H	.84	21.3	2.8 - 7.8	4.5-12.5
I	.88	22.4	2.9 - 8.2	4.7-13.1
J	.92	23.4	3.0 - 8.5	4.9-13.7
K	.96	24.4	3.2 - 8.9	5.1-14.3
L	1.00	25.4	3.3 - 9.3	5.3-14.9
M	1.04	26.4	3.4 - 9.7	5.5-15.5
N	1.08	27.4	3.6-10.0	5.8-16.1
O	1.12	28.4	3.7-10.0	6.0-16.1
P	1.16	29.5	3.8-10.0	6.2-16.1

	in	mm	MPH	km/h
A				
B	.80	20.3	1.9 - 5.3	3.0 - 8.5
C	.84	21.3	2.0 - 5.6	3.2 - 9.0
D	.88	22.4	2.1 - 5.8	3.4 - 9.4
E	.92	23.4	2.2 - 6.1	3.5 - 9.8
F	.96	24.4	2.3 - 6.4	3.7-10.2
G	1.00	25.4	2.4 - 6.6	3.8-10.7
H	1.04	26.4	2.5 - 6.9	4.0-11.1
I	1.08	27.4	2.6 - 7.2	4.1-11.5
J	1.12	28.4	2.7 - 7.4	4.3-11.9
K	1.16	29.5	2.7 - 7.7	4.4-12.4
L	1.20	30.5	2.8 - 8.0	4.6-12.8
M	1.24	31.5	2.9 - 8.2	4.7-13.2
N	1.28	32.5	3.0 - 8.5	4.9-13.7
O	1.32	33.5	3.1 - 8.7	5.0-14.1
P	1.36	34.5	3.2 - 9.0	5.2-14.5

*** Procedure for maintaining proper clip rate:**

1. **Set HOC selector knob to correct letter setting (Per chart located under seat plate).**
2. **Maintain ground speed which prevents reel control light from illuminating**

SELECTING CLIP RATE (REEL SPEED)

To achieve a consistent, high quality of cut, and a uniform after cut appearance, it is important that the reel speed be matched to the height of cut. The machine controller is programmed to automatically control the reel speed to give the correct clip, even as the traction speed changes. In order to control the reel speed as desired, the controller must know the height of cut of the cutting units, and whether the machine is equipped with 5, 7 or 11 blade reels.

To set the HOC selector knob:

1. Verify the height–of–cut setting on the cutting units. Using the column of the chart on page 19 or chart under the seat plate (listing either 5, 7 or 11 blade reels) find the height of cut listing nearest the actual height–of–cut setting. Look across the chart to find the letter corresponding to that height of cut.

2. Turn the HOC selector knob to the letter setting determined in step 1.

3. Operate the machine for several days, then examine the cut to ensure satisfaction with the quality of cut. The height of cut knob may be set one position on either side of the position indicated on the chart to account for differences in grass condition, grass length removed, and personal preference of the superintendent. For a cut with more grass removed but slightly more clip visibility, move the HOC selector knob one position higher than specified. For a cut with less grass removed and slightly less clip visibility, move the HOC selector knob one position lower than specified.

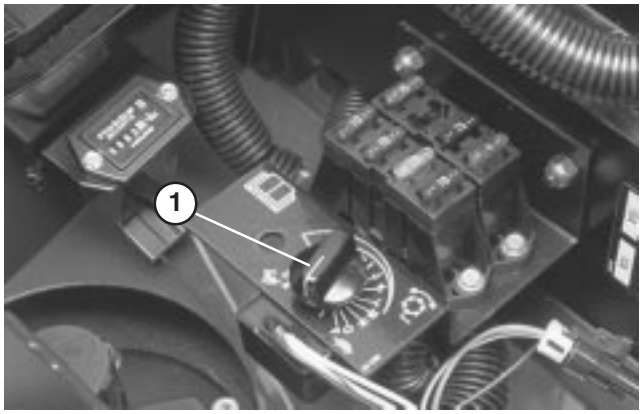

Figure 23

1. H.O.C. Selector Knob

Full Speed – There may be times when it is desirable for the reels to run at full speed regardless of the traction speed of the machine. Examples of this are vertical cutting or heavy scalping. In such cases, the HOC selector knob may be set to position ”A” which will indicate to the machine controller to run the reels at full speed at all times.

REEL CONTROL LIGHT

The Reel Control light (Fig. 25), located on the front steering tower, is used to give feedback to the operator that the machine controller is able to achieve the desired clip. If the machine is operated at a traction speed which is too low or too high, the machine may not be able to match the reel speed at the required value to achieve the desired clip. If this occurs, the Reel Control light will illuminate.

If the Reel Control light illuminates, it means one of the following things:

1. The machine is being operated at a traction speed too slow to allow desired clip.

or

2. The machine is being operated at a traction speed too fast to allow desired clip. To correct the situation, change the traction speed until the light goes out.

or

3. A foreign object, such as a stick, piece of turf, etc. is restricting reel rotation.

If changing the traction speed or removing the foreign object does not cause the light to go out, and the Reel Control light remains illuminated regardless of traction speed, then a service issue is indicated. In this case, refer to the Diagnostic Display section of this manual, check service manual or contact your local authorized Toro Distributor.

PUSHING OR TOWING MACHINE

In an emergency, the Reelmaster 6500−D can be moved by actuating the by−pass valve in the variable displacement hydraulic pump and pushing or towing the machine.

IMPORTANT: Do not push or tow the machine faster than 2−3 mph (3−4.8 km/hr) because internal transmission damage may occur. The by−pass valve must be open whenever the machine is pushed or towed.

1. By−pass valve is located on top of variable displacement pump (Fig. 24). Rotate the valve 90°, in either direction, to open and allow oil to by−pass internally. Because fluid is by−passed, the machine can be moved − slowly − without damaging the transmission.

2. Close by−pass valve before starting the engine. However, do not exceed 5−8 ft−lb (7−11 N m) torque to close the valve.

IMPORTANT: Running the engine with the by−pass valve open will cause the transmission to overheat.

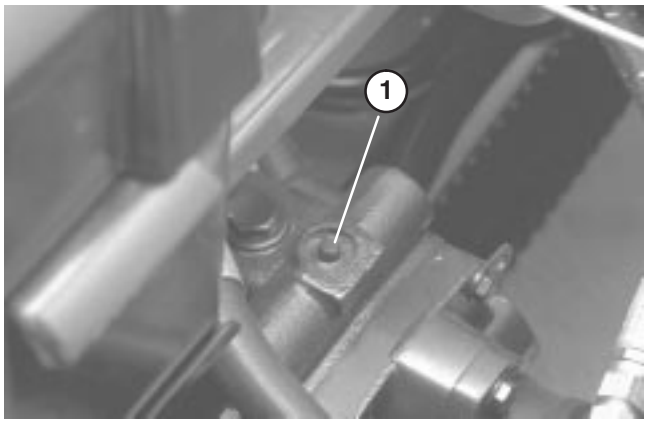

Figure 24
1. By−Pass Valve

DIAGNOSTIC LIGHT (Reel Control Lamp) (Fig. 25)

The RM 6500−D is equipped with a diagnostic light which indicates if the electronic controller is functioning correctly. The diagnostic light is located on the steering tower panel. When the electronic controller is functioning correctly and the key switch is moved to the ON position, the controller diagnostic light will be illuminated for approximately 6 seconds. The light will flash if the controller detects a malfunction in the electrical system.

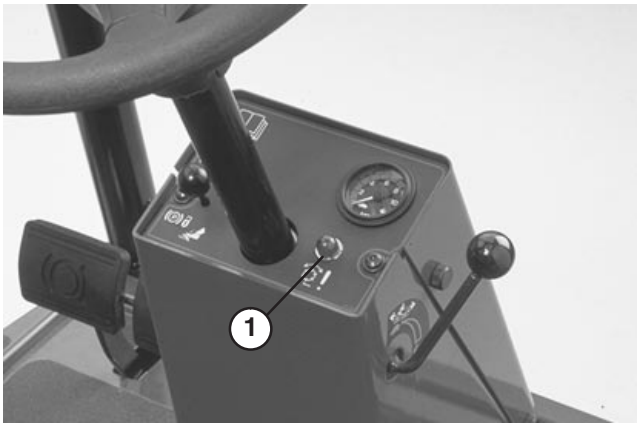

Figure 25
1. Electronic Controller Light

If the diagnostic light is not illuminated when the key switch is in the ON position, this indicates that the electronic controller is not operating. Possible causes are:

1. Loopback connector (under control panel cover) is not connected.
2. The electronic controller light is burned out.
3. Fuses are blown.

Check electrical connections, input fuses and diagnostic light bulb to determine malfunction. Make sure loopback connector is secured to wire harness connector.

DIAGNOSTIC ACE DISPLAY (Optional)

The RM 6500−D is equipped with an electronic controller which controls most machine functions. The controller determines what function is required for various input switches (i.e. seat switch, key switch, etc.) and turns on the outputs to actuate solenoids or relays for the requested machine function.

For the electronic controller to control the machine as desired, each of the input switches, output solenoids and relays must be connected and functioning properly.

The Diagnostic ACE display is a tool to help the user verify correct electrical functions of the machine.

CHECKING INTERLOCK SWITCHES

The purpose of the interlock switches are to prevent the engine from cranking or starting unless the traction pedal is in NEUTRAL, the Enable / Disable switch is in DISABLE and the Lower Mow / Raise control is in the neutral position. In addition, the engine will stop when the traction pedal is depressed with operator off the seat.

CAUTION

THE INTERLOCK SWITCHES ARE FOR THE PROTECTION OF THE OPERATOR AND BYSTANDERS, AND TO ENSURE CORRECT OPERATION OF THE MACHINE, SO DO NOT BYPASS OR DISCONNECT THEM. CHECK OPERATION OF THE SWITCHES DAILY TO ASSURE INTERLOCK SYSTEM IS OPERATING. IF A SWITCH IS DEFECTIVE, REPLACE IT BEFORE OPERATING. DO NOT RELY ENTIRELY ON SAFETY SWITCHES – USE COMMON SENSE!

To verify interlock switch function:

1. Park machine on a level surface, lower the cutting units, stop the engine and engage the parking brake.

2. Open control panel cover. Locate wire harness and loopback connector. Carefully unplug loopback connector from harness connector (Fig. 26).

3. Connect the Diagnostic ACE display connector to the harness connector. Make sure correct overlay decal is positioned on Diagnostic ACE display.

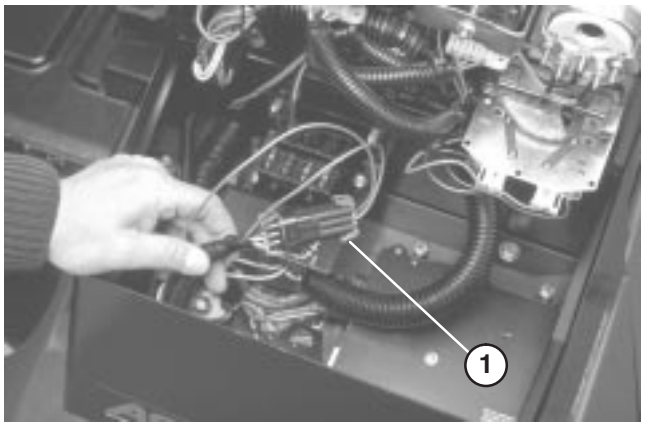

Figure 26
1. Wire Harness and Connectors

4. Turn the key switch to the ON position, but do not start machine.

Note: The red text on the overlay decal refers to input switches and the green text refers to outputs.

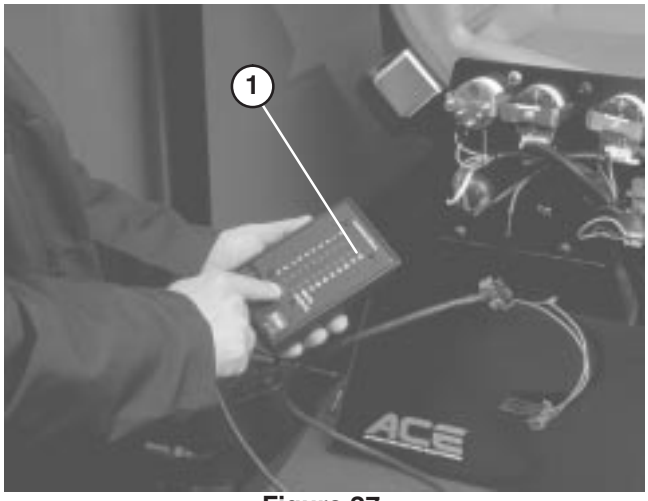

Figure 27
1. Diagnostic ACE

5. The "inputs displayed" LED, on lower right column of the Diagnostic ACE, should be illuminated. If "outputs displayed" LED is illuminated, press and release the toggle button, on Diagnostic ACE, to change LED to "inputs displayed". Do not hold button down.

6. The Diagnostic ACE will illuminate the LED associated with each of the inputs when that input switch is closed.

Individually, change each of the switches from open to closed (i.e., sit on seat, engage traction pedal, etc.), and note that the appropriate LED on Diagnostic ACE will blink on and off when corresponding switch is closed. Repeat on each switch that is possible to be changed by hand.

7. If switch is closed and appropriate LED does not turn on, check all wiring and connections to switch and/or check switches with an ohm meter. Replace any defective switches and repair any defective wiring.

The Diagnostic ACE also has the ability to detect which output solenoids or relays are turned on. This is a quick way to determine if a machine malfunction is electrical or hydraulic.

To verify output function:

1. Park machine on a level surface, lower the cutting units, stop the engine and engage the parking brake.

2. Open control panel cover. Locate wire harness and connectors near controller. Carefully unplug loopback connector from harness connector. Set HOC selector knob to position ”A”.

3. Connect the Diagnostic ACE connector to the harness connector. Make sure correct overlay decal is positioned on Diagnostic ACE.

4. Turn the key switch to the ON position, but do not start machine.

Note: The red text on the overlay decal refers to input switches and the green text refers to outputs.

5. The “outputs displayed” LED, on lower right column of Diagnostic ACE, should be illuminated. If “inputs displayed” LED is illuminated, press the toggle button, on Diagnostic ACE, to change LED to “outputs displayed”.

Note: It may be necessary to toggle between “inputs displayed” and “outputs displayed” several times to do the following step. To toggle back and forth, press toggle button once. This may be done as often as required. DO NOT HOLD BUTTON.

6. Sit on the seat and attempt to operate the desired function of the machine. The appropriate output LED’s should illuminate to indicate that the ECU is turning on that function. (Refer to the list on page 23 to be certain of the specified output LED’s.

Note: If any output LED is blinking, this indicates an electrical problem with that OUTPUT. Repair / replace defective electrical parts immediately. To reset a blinking LED, turn the key switch “OFF”, then back “ON” and clear the controllers fault memory (Refer to Clearing the Fault Memory).

If no output LED’s are blinking, but the correct output LED’s do not illuminate, verify that the required input switches are in the necessary positions to allow that function to occur. Verify correct switch function.

If the output LED’s are on as specified, but the machine does not function properly, this indicates a non–electrical problem. Repair as necessary.

Note: Due to electrical system constraints, the output LED’s for “START”, “PREHEAT” and “ETR/ALT” may not blink even though an electrical problem may exist for those functions. If the machine problem appears to be with one of these functions, be certain to check the electrical circuit with a volt / ohm meter to verify that no electrical problem exists to these functions.

If each input switch is in the correct position and functioning correctly, but the output LED’s are not correctly illuminated, this indicates an ECU problem. If this occurs, contact your Toro Distributor for assistance.

FAULT MEMORY AND RETRIEVAL

If the Controller senses a **fault** on one of the **output solenoids**, it will flash the machines diagnostic Lamp (Reel Control lamp or green Diagnostic lamp under console) and store the fault into the Controllers (ECU) memory. The fault can then be retrieved and viewed with the Diagnostic ACE hand held tool or a lap top/PC at anytime. The Controller will store one (1) fault at a time and will not store another different fault until the first fault is cleared.

Retrieving Fault Information

Retrieving Stored Faults

1. Rotate ignition key to **Off** position.

2. Connect the Hand held Diagnostic Tool to the desired Controller Loopback Connector (use the proper overlay).

3. Move the Joystick to the **Raise** position and hold.

4. Rotate ignition key to **On** position, and continue to hold the Joystick in **Raise** position until the top left Diagnostic Tool light comes on (approx. 2 seconds).

5. Release the Joystick to the center position.

6. Hand held Tool will now playback the fault retained in the Controller memory.

IMPORTANT: The display will show eight (8) individual records with the fault displayed on the 8th record. Each record will be displayed for 10 seconds. **Be sure to have the Diagnostic Tool display on Outputs** to see fault. The Problem circuit will be flashing. Records will repeat until key is turned off. Unit will not start in this mode.

Clearing the Fault Memory
(Diagnostic Tool not required)

1. Rotate ignition key to **Off** position.

2. Turn Backlap Switch to the **Front** or **Rear** Backlap position.

3. Turn the Reel Control Switch to **Enable** position.

4. Move the Joystick to the **Raise** position and hold.

5. Turn the ignition key to **On**, and continue to hold the Joystick in the **Raise** position until the Reel Control Lamp starts to flash (approx. 2 seconds).

6. Release the Joystick and turn the Key **Off**. **Memory is now cleared.**

7. Turn the Backlap Switch to **Off** and Enable Switch to **Disable** position.

OPERATING INSTRUCTIONS

IMPORTANT: The Diagnostic ACE display must not be left connected to the machine. It is not designed to withstand the environment of the machine's every day use. When done using Diagnostic ACE, disconnect it from the machine and reconnect loopback connector to harness connector. Machine will not operate without loopback connector installed on harness. Store Diagnostic ACE in dry, secure location in shop, not on machine.

HYDRAULIC SOLENOID VALVE FUNCTIONS

Use the list below to identify and describe the different functions of the solenoids in the hydraulic manifold. Each solenoid must be energized to allow function to occur.

Solenoid	Function
VS1A,S1A,S2A	Front reel circuit
VS1B,S1B,S2B	Rear reel circuit
VS1A,S1A,S4A,S6A	Lift front wing cutting units
VS1A,S1A,S4A,S7A	Lift center cutting unit
VS1A,S1A,S4A,S4B	Lift rear cutting unit
S5A,S7A	Lower center cutting unit
S5A,S4B	lower rear cutting unit
S54,S6A	Lower front wing cutting units
VS1A,S3A	Backlap front cutting units
VSIB,S3B	Backlap rear cutting units

HEIGHT OF CUT (HOC) SELECTION POTENTIOMETER REPLACEMENT

The HOC selection potentiometer is factory calibrated. If the HOC selection potentiometer must be replaced for any reason, the new potentiometer will need to be calibrated in order to assure the correct clip is delivered. If the potentiometer is not calibrated correctly, the delivered clip may be as much as 2 or 3 settings different from the desired setting. This calibration must be done by your Toro distributor.

OPERATING CHARACTERISTICS

Familiarization – Before mowing grass, practice operating machine in an open area. Start and stop the engine. Operate in forward and reverse. Lower and raise cutting units and engage and disengage reels. When you feel familiar with the machine, practice operating up and down slopes at different speeds.

The brakes can be used to assist in turning the machine. However, use them carefully, especially on soft or wet grass conditions because the turf may be torn accidentally. Individual turning brakes may also be used to help maintain traction. For example, in some slope conditions, the uphill wheel slips and loses traction. If this situation occurs, depress uphill turn pedal gradually and intermittently until the uphill wheel stops slipping, thus, increasing traction on the downhill wheel.

IMPORTANT: Before mowing grass, practice operating the machine in turns. Turf damage in turns may occur especially under soft or wet grass conditions if the turn is completed at a high speed or at a small turning radius. Maintain a speed below 3mph during a turn and a turning radius greater than 8 feet to minimize turf damage from tires or cutting units. Mounting the cutting units with the steering pin in the front mounting hole (see page 10) will allow the cutting unit to steer itself as the traction unit turns providing optimum maneuverability and cutting performance in turns. During cross–cutting of fairways, a "tear drop" shape turn is recommended to increase cutting productivity and minimize turf damage.

WARNING: When operating machine, always use the seat belt and ROPS together.

Warning System – If a warning light comes on during operation, stop the machine immediately and correct the problem before continuing operation. Serious damage could occur if the machine is operated with a malfunction.

WARNING

Engine will not crank over until Glow Plug Lamp goes out (Delay in Interlock). Glow plugs must complete cycle before controller will allow engine to crank.

Mowing –Start engine and move throttle to FAST so engine is running at maximum speed. Move the ENABLE / DISABLE switch to ENABLE and use the LOWER MOW / RAISE lever to control the cutting units (front cutting units are timed to lower before the rear cutting units). To move forward and cut grass, press traction pedal forward. Maintain a speed which does not result in the Reel Control LIght being illuminated. Gradually increase or decrease traction speed to ensure proper clip is maintained.

Transport – Move the ENABLE / DISABLE switch to Joy Stick DISABLE (mid position), lock brake pedals together and raise the cutting units to the transport position. Be careful when driving between objects so you do not accidentally damage the machine or cutting units. Use extra care when operating machine on slopes. Drive slowly and avoid sharp turns on slopes to prevent roll overs. The cutting units should be lowered when going downhill for steering control.

Selecting Clip Rate (Reel Speed) – The automatic clip control programmed in the machine controller requires that it be told at what height of cut the machine is being operated and whether the machine is equipped with 5, 7 or 11 blade reels. Refer to Selecting Clip Rate (Reel Speed), page 19.

When the machine is being operated in such a way as to allow the machine to control the reel speed to achieve the desired clip, the Reel Control light will not light. If the Reel Control light is illuminated, this indicates that the traction speed is too low or too high to allow the machine to achieve the desired clip.

LUBRICATION

CAUTION

Before servicing or making adjustments to the machine, stop engine and remove key from the switch.

GREASING BEARINGS AND BUSHINGS

(Fig. 28 – 36)

The machine has grease fittings that must be lubricated regularly with No. 2 General Purpose Lithium Base Grease. If machine is operated under normal conditions, lubricate all bearings and bushings after every 50 hours of operation or immediately after every washing.

1. The grease fitting locations and quantities are: Cutting unit carrier frame and pivot (2 ea.) (Fig. 28); Rear axle tie rod (2), Steering cylinder ball joints (2), (Fig. 30); Front lift cylinders (3), (Fig. 31 and 35); Rear lift cylinder pivot (2), (Fig. 32); Lift arm pivot (3), (Fig. 33); Rear axle pivot (Fig. 34) Rear lift arm pivots (2) (Fig. 29) and Brake pedal shaft (1) (Fig. 36).

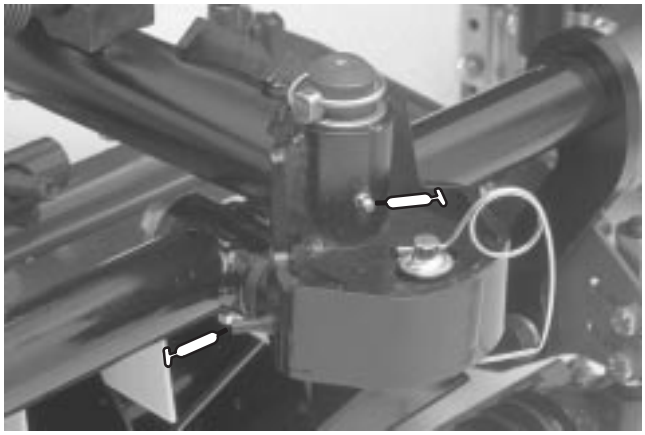

Figure 28

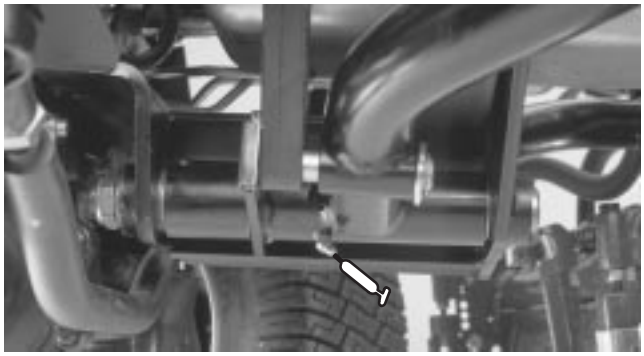

Figure 29

Figure 30

Figure 31

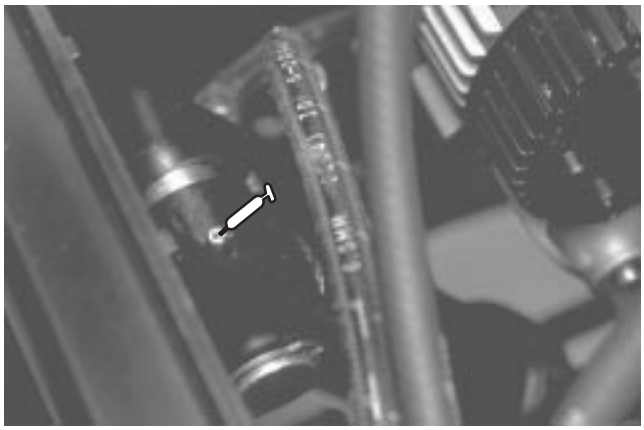

Figure 32

LUBRICATION

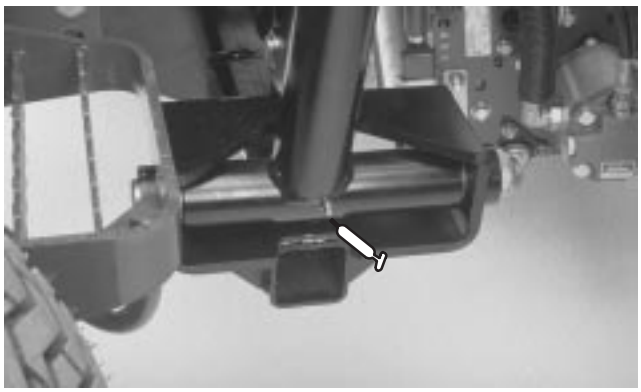

Figure 33

Figure 35

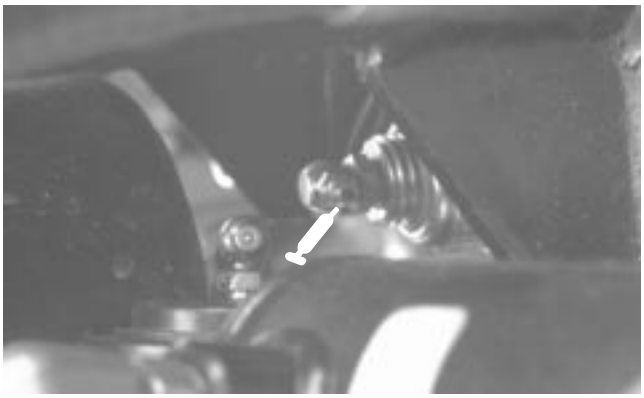

Figure 34

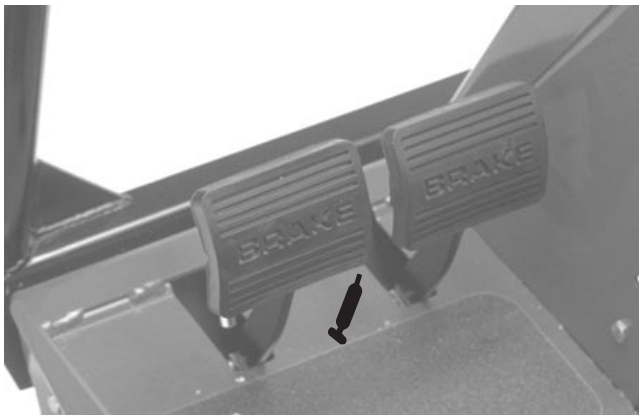

Figure 36

SERVICE INTERVAL CHART

REELMASTERS
6500-D / 6700-D
QUICK REFERENCE AID

CHECK/SERVICE (daily)
1. OIL LEVEL, ENGINE
2. OIL LEVEL, HYDRAULIC TANK
3. COOLANT LEVEL, RADIATOR
4. FUEL /WATER SEPARATOR
5. AIR FILTER SERVICE INDICATOR
6. RADIATOR SCREEN
7. BRAKE FUNCTION
8. TIRE PRESSURE (15-20 PSI)

CHECK/SERVICE
SEE OPERATOR'S MANUAL
9. BATTERY
10. BELTS (FAN, ALT.)
11. PLANETARY GEAR DRIVE
12. REAR AXLE OIL FILL**
13. REAR AXLE OIL CHECK (2)**

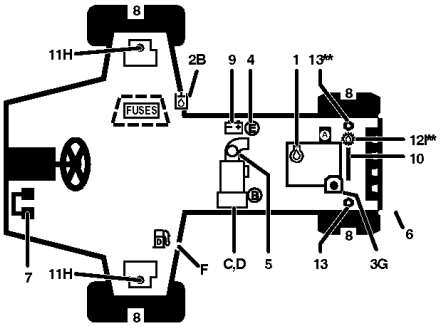

FLUID SPECIFICATIONS/CHANGE INTERVALS

SEE OPERATOR'S MANUAL FOR INITIAL CHANGES.	FLUID TYPE	CAPACITY	CHANGE INTERVAL FLUID	CHANGE INTERVAL FILTER	FILTER PART NO.
A. ENGINE OIL	SAE 15W-40	5.3 QTS.	100 HRS.	100 HRS.	74-7970
B. HYD. CIRCUIT OIL	MOBIL	9 GALS.*	800 HRS.	SEE SERVICE INDICATOR	94-2621
C. PRIMARY AIR FILTER	----	----	----	SEE SERVICE INDICATOR	93-9162
D. SAFETY AIR FILTER	----	----	----	SEE OPERATOR'S MANUAL	93-9163
E. FUEL FILTER	----	----	----	400 HRS.	76-5220
F. FUEL TANK	NO. 2-Diesel	15 GALS.	Drain and flush, 2 yrs.		
G. COOLANT	93-7213	3.5 GALS.	Drain and flush, 2 yrs.		
H. PLANETARY GEAR DRIVE	SAE85-W140	15 OZ.	800 HRS.	----	----
I. REAR AXLE OIL**	SAE85-W90	80 OZ.	800 HRS.	----	----

* INCLUDES FILTER, CHECK DIP STICK, DO NOT OVER FILL. **4WD ONLY

98-3728

DAILY MAINTENANCE CHECKLIST

Daily Maintenance: (duplicate this page for routine use)
Check proper section of Operator's Manual for fluid specifications

Maintenance Check Item ➜	Daily Maintenance Check For Week Of _____						
	MON	TUES	WED	THURS	FRI	SAT	SUN
✓ Safety Interlock Operation							
✓ Brake Operation							
✓ Engine Oil & Fuel Level							
✓ Cooling System Fluid Level							
Drain Water/Fuel Separator							
✓ Air Filter Restriction Indicator							
✓ Radiator & Screen for Debris							
✓ Unusual Engine Noises[1]							
✓ Unusual Operating Noises							
✓ Hydraulic System Oil Level							
✓ Hydraulic Filter Indicator[2]							
✓ Hydraulic Hoses for Damage							
✓ Fluid Leaks							
✓ Tire Pressure							
✓ Instrument Operation							
✓ Reel–to–Bedknife Adjustment							
✓ Height–of–Cut Adjustment							
Lubricate All Grease Fittings[3]							
Touch–up Damaged Paint							

[1]= Check glow plug and injector nozzles, if hard starting, excess smoke or rough running is noted.
[2]= Check with engine running and oil at operating temperature.
[3]= Immediately after every washing, regardless of the interval listed.

Notation for areas of concern: Inspection performed by_____

Item	Date	Information
1		
2		
3		
4		
5		
6		
7		
8		

MAINTENANCE SCHEDULE

Minimum Recommended Maintenance Intervals

Maintenance Procedure	Every 50hrs	Every 100hrs	Every 200hrs	Every 400hrs	Every 800hrs
Lubricate All Grease Fittings					
Inspect Air Filter, Dust Cup, and Baffle					
Check Battery Level/Cable Connections					
‡ Change Engine Oil and Filter					
Inspect Cooling System Hoses					
† Check Fan and Alternator Belt Tension					
† Torque Wheel Lug Nuts					
◐ Service Air Filter					
Change Fuel Filter					
Inspect Fuel Lines and Connections					
‡ Check Engine RPM (idle and full throttle)					
Check Rear Axle Oil Level (4wd)					
Check Front Planetary Gear Lube					
Inspect Engine Timing Belt (see note below)					
Drain and Clean Fuel Tank					
Change Hydraulic Oil					
Change Hydraulic Oil Filter					
❑ Change Front Planetary Gear Lube					
Pack 2WD Rear Axle Bearings					
Change Rear Axle Oil Level (4wd)					
Check Rear Wheel Toe–In					

† Initial break in at 10 hours
‡ Initial break in at 50 hours
❑ Initial break in at 200 hours
◐ If indicator shows red

Replace Moving Hoses
Replace Safety Switches
Cooling System Flush/Replace Fluid

Annual Recommendations:
Items listed are recommended every 1500 hours or 2 years, whichever occurs first.

NOTE: Replace Timing Belt if worn, cracked or oil soaked. A new Timing Belt should be installed any time the Belt is removed or loosened.

AIR CLEANER MAINTENANCE

CAUTION

Before servicing or making adjustments to the machine, stop engine and remove key from the switch.

GENERAL AIR CLEANER MAINTENANCE

1. Check air cleaner body for damage which could possibly cause an air leak. Replace a damaged air cleaner body.

2. Service the air cleaner filters when ever air cleaner indicator (Fig. 37) shows red or every 400 hours (more frequently in extreme dusty or dirty conditions). Do not over service air filter.

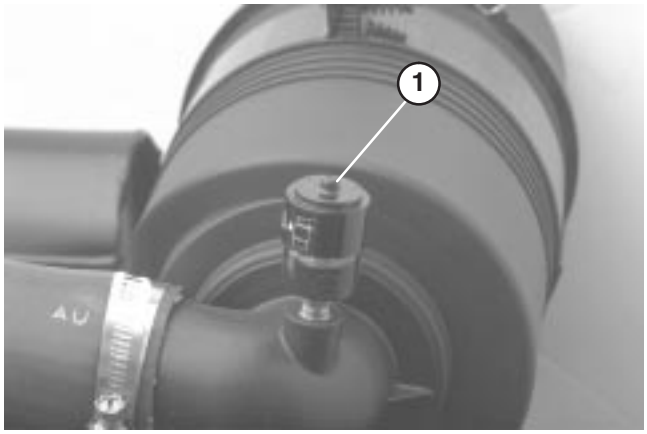

Figure 37
1. Air cleaner indicator

3. Be sure cover is sealing around air cleaner body.

SERVICING AIR CLEANER

1. Release latches securing air cleaner cover to air cleaner body. Separate cover from body. Clean inside of air cleaner cover.

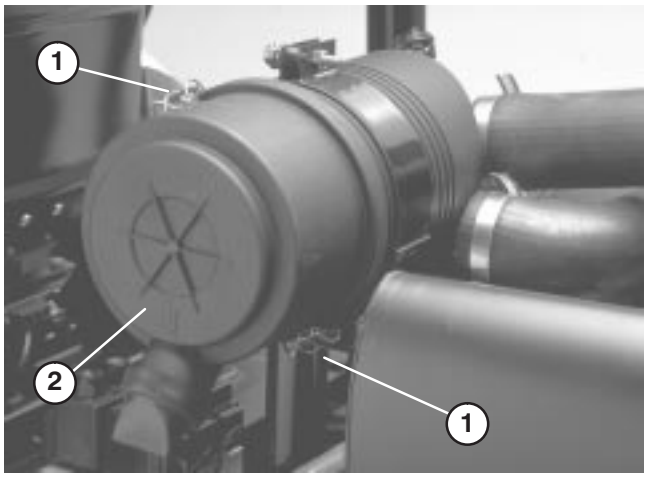

Figure 38
1. Air cleaner latches
2. Dust cup

2. Gently slide primary filter (Fig. 39) out of air cleaner body to reduce the amount of dust dislodged. Avoid knocking filter against air cleaner body. **Do not remove safety filter.**

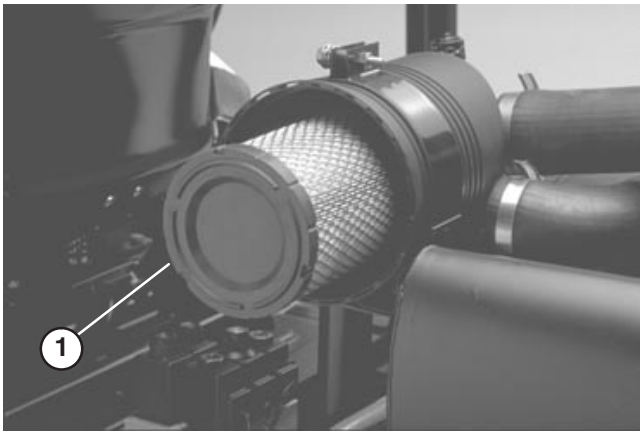

Figure 39
1. Air cleaner primary filter

3. Inspect primary filter and discard if damaged. Do not wash or reuse a damaged filter.

IMPORTANT: Never attempt to clean a safety filter. Replace the safety filter with a new one after every three primary filter services.

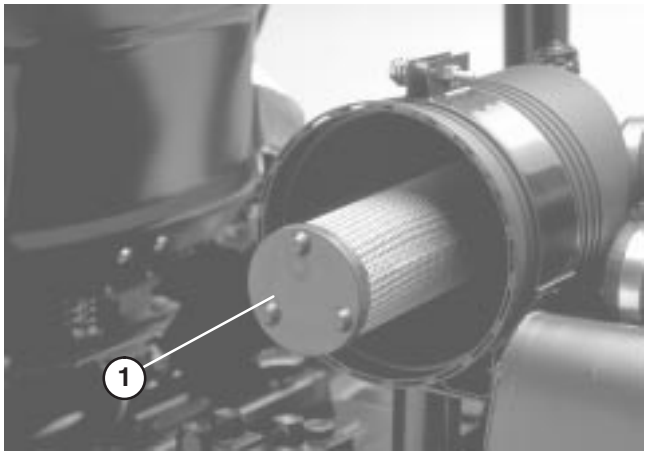

Figure 40
1. Air cleaner safety filter

Washing Method

A. Prepare a solution of filter cleaner and water and soak filter element about 15 minutes. Refer to directions on filter cleaner carton for complete information.

B. After soaking filter for 15 minutes, rinse it with clear water. Maximum water pressure must not exceed 40 psi to prevent damage to the filter element. Rinse filter from clean side to dirty to side.

C. Dry filter element using warm, flowing air (160°F) max), or allow element to air−dry. Do not use a light bulb to dry the filter element because damage could result.

AIR CLEANER MAINTENANCE

Compressed Air Method

A. Blow compressed air from inside to the outside of dry filter element. Do not exceed 100 psi to prevent damage to the element.

B. Keep air hose nozzle at least 2” from filter and move nozzle up and down while rotating the filter element. Inspect for holes and tears by looking through the filter toward a bright light.

4. Inspect new filter for shipping damage. Check sealing end of filter. Do not install a damaged filter.

5. Insert new filter properly into air cleaner body. Make sure filter is sealed properly by applying pressure to outer rim of filter when installing. Do not press on flexible center of filter.

6. Reinstall cover and secure latches. Make sure cover is positioned with TOP side up.

7. Reset indicator (Fig. 37) if showing red.

CAUTION

Before servicing or making adjustments to the machine, stop engine and remove key from the switch.

ENGINE OIL AND FILTER (Fig. 41–42)

Change oil and filter initially after the first 50 hours of operation, thereafter change oil and filter every 100 hours.

1. Remove drain plug (Fig. 41) and let oil flow into drain pan. When oil stops, install drain plug and new plug seal, Part No. 74–7850.

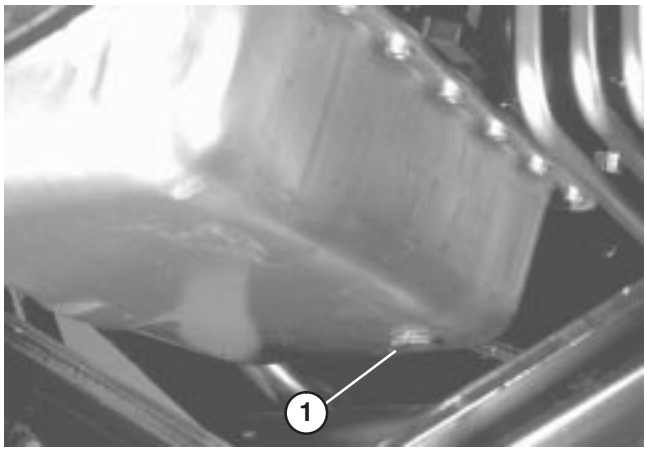

Figure 41
1. Drain Plug

2. Remove oil filter (Fig. 42). Apply a light coat of clean oil to the new filter seal before screwing it on. DO NOT OVER–TIGHTEN.

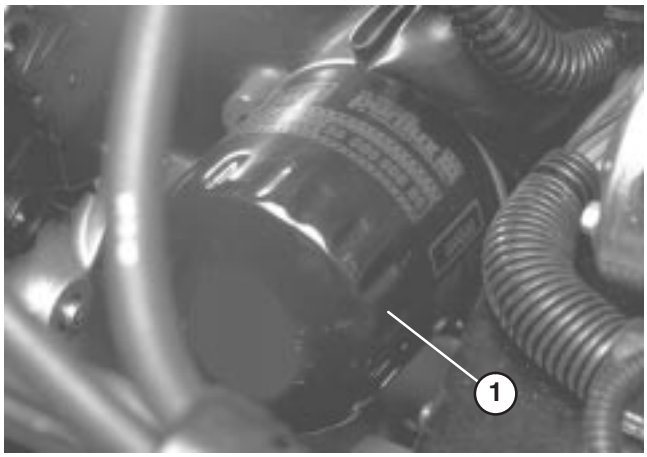

Figure 42
1. Oil Filter

3. Add 15W–40 CD, CE, CF, CF–4 or CG–4 oil to crankcase. Capacity is 5.3 quarts with filter.

FUEL SYSTEM (Fig. 43 & 44)

Fuel Tank

Drain and clean fuel tank every 800 hours of operation or yearly, whichever comes first. Also, drain and clean tank if fuel system becomes contaminated or if machine is to be stored for an extended period. Use clean fuel to flush out the tank.

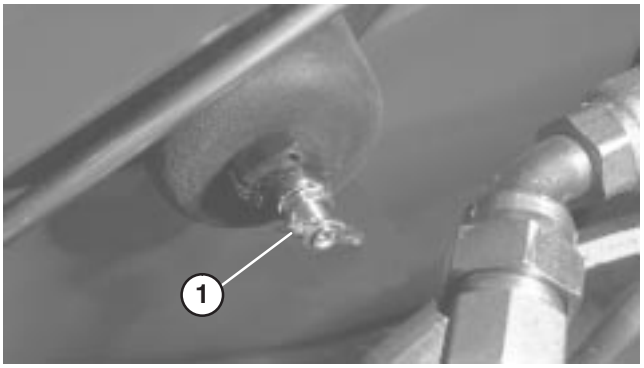

Figure 43
1. Fuel Tank Drain

DANGER

Because diesel fuel is highly flammable, use caution when storing or handling it. Do not smoke while filling the fuel tank. Do not fill fuel tank while engine is running, hot, or when machine is in an enclosed area. Always fill fuel tank outside and wipe up any spilled diesel fuel before starting the engine. Store fuel in a clean, safety–approved container and keep cap in place. Use diesel fuel for the engine only; not for any other purpose.

Fuel Lines and Connections

Check lines and connections every 400 hours or yearly, whichever comes first. Inspect for deterioration, damage, or loose connections.

Draining Fuel Filter / Water Separator

Drain water or other contaminants from fuel filter / water separator daily.

1. Place a clean container under fuel filter.

2. Loosen drain screw on bottom of fuel filter and press primer plunger until only fuel is evident draining into container.

3. Tighten drain screw.

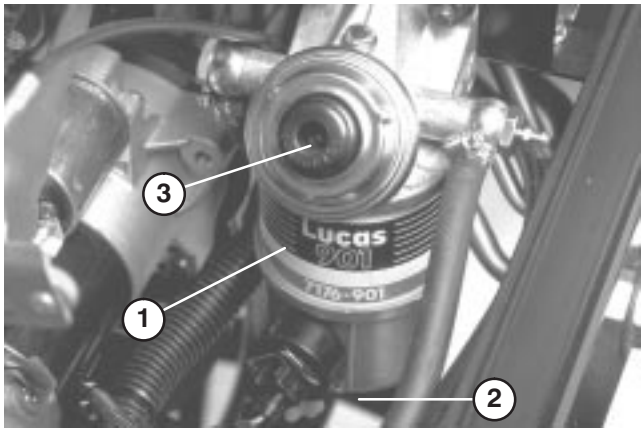

Figure 44
1. Fuel Filter / Water Separator
2. Drain Screw
3. Primer Plunger

Changing Fuel Filter

Replace fuel filter if fuel flow becomes restricted, after every 400 hours of operation or annually, whichever comes first.

1. Loosen bolt and unscrew bottom filter cap from filter assembly. Remove cap, gaskets, o-ring and filter from assembly. Note position of gaskets and o-ring when disassembling from filter.

2. Install new filter, gaskets, o-ring with filter assembly cap.

3. Prime fuel system, refer to Priming Fuel System.

ENGINE COOLING SYSTEM (Fig. 45–46)

1. Removing Debris – Remove debris from rear screen, oil cooler and radiator daily, clean more frequently in dirty conditions.

IMPORTANT: Never spray water onto a hot engine as damage to engine may occur.

A. Turn engine off, release hood latch and raise hood. Clean engine area thoroughly of all debris. Close hood.

B. Unlatch and remove rear screen (Fig. 45). Clean screen thoroughly.

Figure 45
1. Rear Screen

C. Unscrew knobs and pivot oil cooler rearward. Clean both sides of oil cooler and radiator area thoroughly with compressed air. **Do not use water.** Open hood and blow debris out toward back of machine. Pivot oil cooler back into position and tighten knobs.

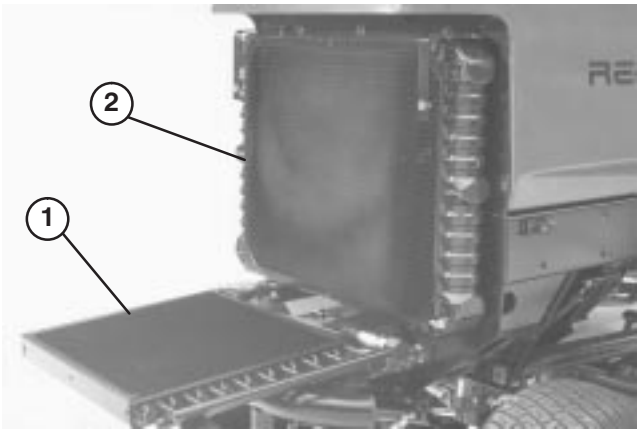

Figure 46
1. Oil Cooler
2. Radiator

Note: Fan shroud may be easily unbolted from machine to simplify cleaning.

D. Install rear screen and secure latches.

Note: Do not use water to clean engine, as damage may occur.

2. Maintaining Cooling System – Capacity of the system is 3.5 gal. Always protect cooling system with a 50/50 solution of water and Peugeot recommended anti–freeze (Part No. 93–7213) or equivalent . DO NOT USE WATER ONLY IN COOLING SYSTEM.

A. After every 100 operating hours, inspect and tighten hose connections. Replace any deteriorated hoses.

B. After every 2 years, drain and flush the cooling system. Add anti–freeze (refer to Check Cooling System).

ENGINE FAN BELT (Fig. 47)

Check condition and tension of fan belt after every 100 hours of operation (Fig. 47). Replace belt as required.

1. Using a Universal Belt Tension Gauge (OTC model 1036, 1294 or Toro/Peugeot Digital Belt Tension Tool (TOR4075), check the belt tension between the fan pulley and the Alternator pulley on the right side of the engine.

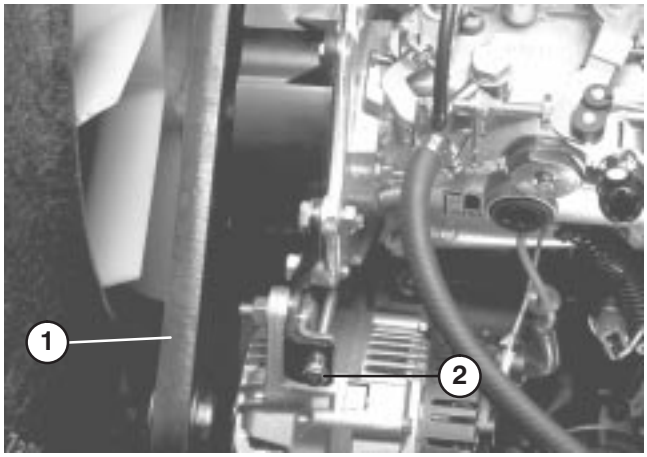

Figure 47
1. Fan Belt 2. Adjusting Screw

2. To adjust belt tension, loosen alternator mounting bolts and adjust tension screw to attain the following specifications:

Universal Belt Tension gauge
80 to 90 lbs. (35 to 40 daN)

Digital Belt TensionTool
70 to 75 Seems

3. Tighten alternator bolts and check belt deflection again to assure tension is correct.

HYDRAULIC MAINTENANCE

CAUTION

Before servicing or making adjustments to the machine, stop engine and remove key from the switch.

CHANGING HYDRAULIC FLUID (Fig. 48)

Change hydraulic fluid after every 800 operating hours, in normal conditions. If fluid becomes contaminated, contact your local TORO distributor because the system must be flushed. Contaminated fluid looks milky or black when compared to clean oil.

1. Turn engine off and raise hood.

2. Remove drain plug from bottom of reservoir and let hydraulic fluid flow into drain pan. Reinstall and tighten plug when hydraulic fluid stops draining.

3. Fill reservoir with approximately 8.5 gallons of hydraulic fluid. Refer to Checking Hydraulic Fluid.

IMPORTANT: Use only hydraulic fluids specified. Other fluids could cause system damage.

4. Install reservoir cap. Start engine and use all hydraulic controls to distribute hydraulic fluid throughout the system. Also check for leaks. Then stop the engine.

5. Check level of fluid and add enough to raise level to FULL mark on dipstick. DO NOT OVER FILL.

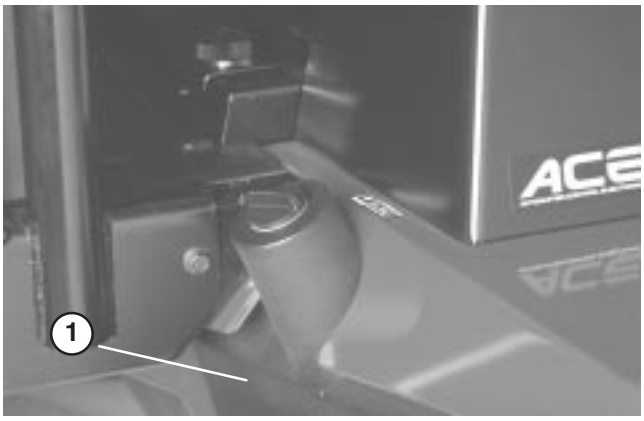

Figure 48
1. Hydraulic Reservoir

REPLACING HYDRAULIC FILTER (Fig. 49)

The hydraulic system filter head is equipped with a service interval indicator. With the engine running, view the indicator, it should be in the GREEN zone. When the indicator is in the RED zone, the filter element should be changed.

Use the Toro replacement filter (Part No. 94–2621).

IMPORTANT: Use of any other filter may void the warranty on some components.

1. Position machine on a level surface, lower the cutting units, stop the engine, engage the parking brakes and remove key from ignition switch.

2. Clean area around filter mounting area. Place drain pan under filter and remove filter.

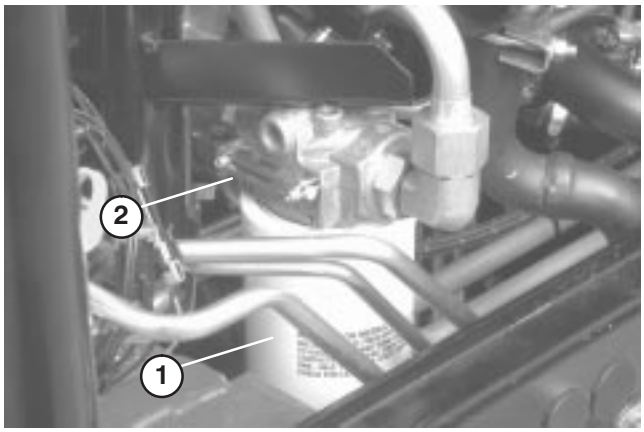

Figure 49
1. Hydraulic Filter
2. Service interval indicator

3. Lubricate new filter gasket and fill the filter with hydraulic fluid.

4. Assure filter mounting area is clean. Screw filter on until gasket contacts mounting plate. Then tighten filter one–half turn.

5. Start engine and let run for about two minutes to purge air from the system. Stop the engine and check for leaks.

CHECKING HYDRAULIC LINES AND HOSES

Inspect hydraulic lines and hoses daily for leaks, kinked lines, loose mounting supports, wear, loose fittings, weather deterioration and chemical deterioration. Make all necessary repairs before operating.

WARNING

Keep body and hands away from pin hole leaks or nozzles that eject high pressure hydraulic fluid. Use cardboard or paper to find hydraulic leaks. Hydraulic fluid escaping under pressure can penetrate skin and cause injury. Fluid accidentally injected into the skin must be surgically removed within a few hours by a doctor familiar with this form of injury or gangrene may result.

HYDRAULIC SYSTEM TEST PORTS (Fig. 50 – 52)

The test ports are used to test pressure in the hydraulic circuits. Contact your local Toro distributor for assistance.

1. Test Port "A" (Fig. 50) is used to assist in trouble shooting the hydraulic circuit for the front cutting units and lift cylinders.

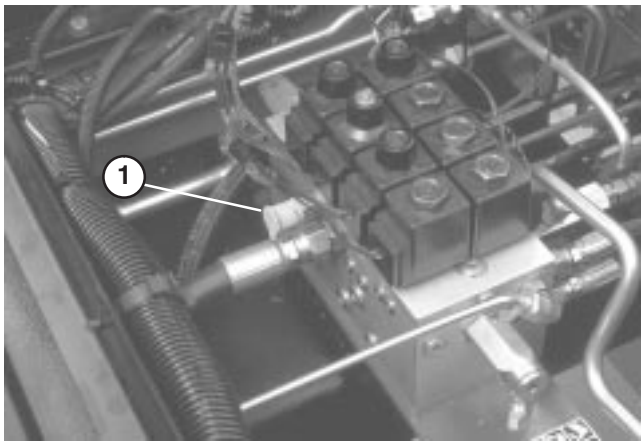

Figure 50
1. Test Port "A"

2. Test Port "B" (Fig. 51) is used to assist in trouble shooting the hydraulic circuit for the rear cutting units.

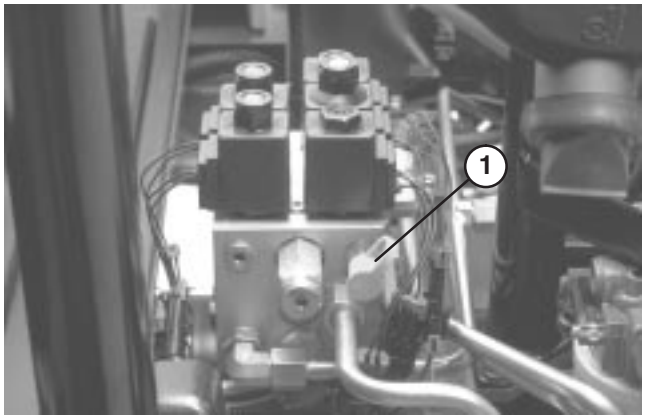

Figure 51
1. Test Port "B"

3. Test Port "C" is located on the bottom of the hydrostatic transmission and is used to measure the charge pressure of the transmission.

4. Test Port "D" is used to measure traction forward pressure.

5. Test Port "E" is used to measure traction reverse pressure.

6. Test Port "F" is used to measure steering circuit pressure.

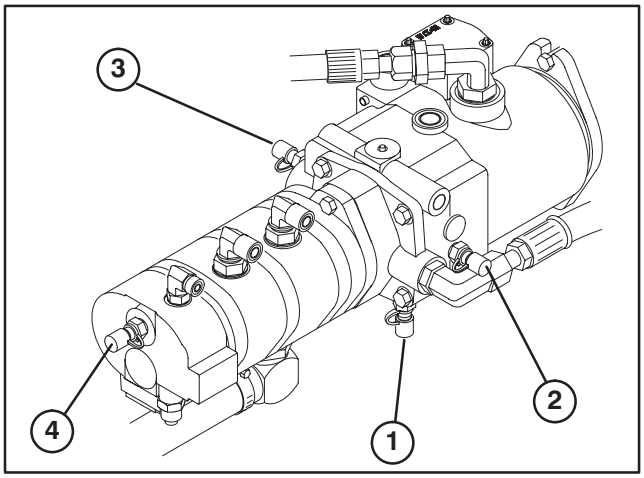

Figure 52
1. Test Port "C"
2. Test Port "D"
3. Test Port "E"
4. Test Port "F"

ADJUSTING TRACTION DRIVE FOR NEUTRAL (Fig. 53)

The machine must not creep when traction pedal is released. If it does creep, an adjustment is required.

1. Park machine on a level surface, shut engine off and lower cutting units to the floor. Depress only the right brake pedal and engage the parking brake.

2. Jack up left side of machine until front tire is off the shop floor. Support machine with jack stands to prevent it from falling accidentally.

NOTE: On 4 wheel drive models, left rear tire must also be off the shop floor.

3. Start engine and allow run at low idle.

4. Adjust jam nuts on pump rod end to move pump control tube forward to eliminate forward creep or rearward to eliminate rearward creep.

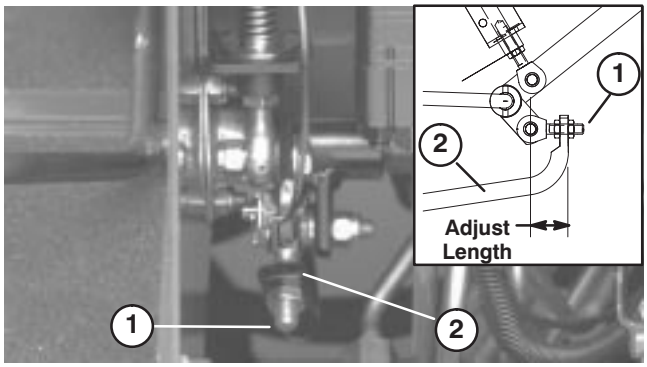

Figure 53
1. Pump rod
2. Pump control tube

5. After wheel rotation ceases, Tighten jam nuts to secure adjustment.

6. Stop the engine and release the right brake. Remove jack stands and lower the machine to the shop floor. Test drive the machine to make sure it does not creep.

HYDRAULIC SCHEMATIC

2 WHEEL DRIVE

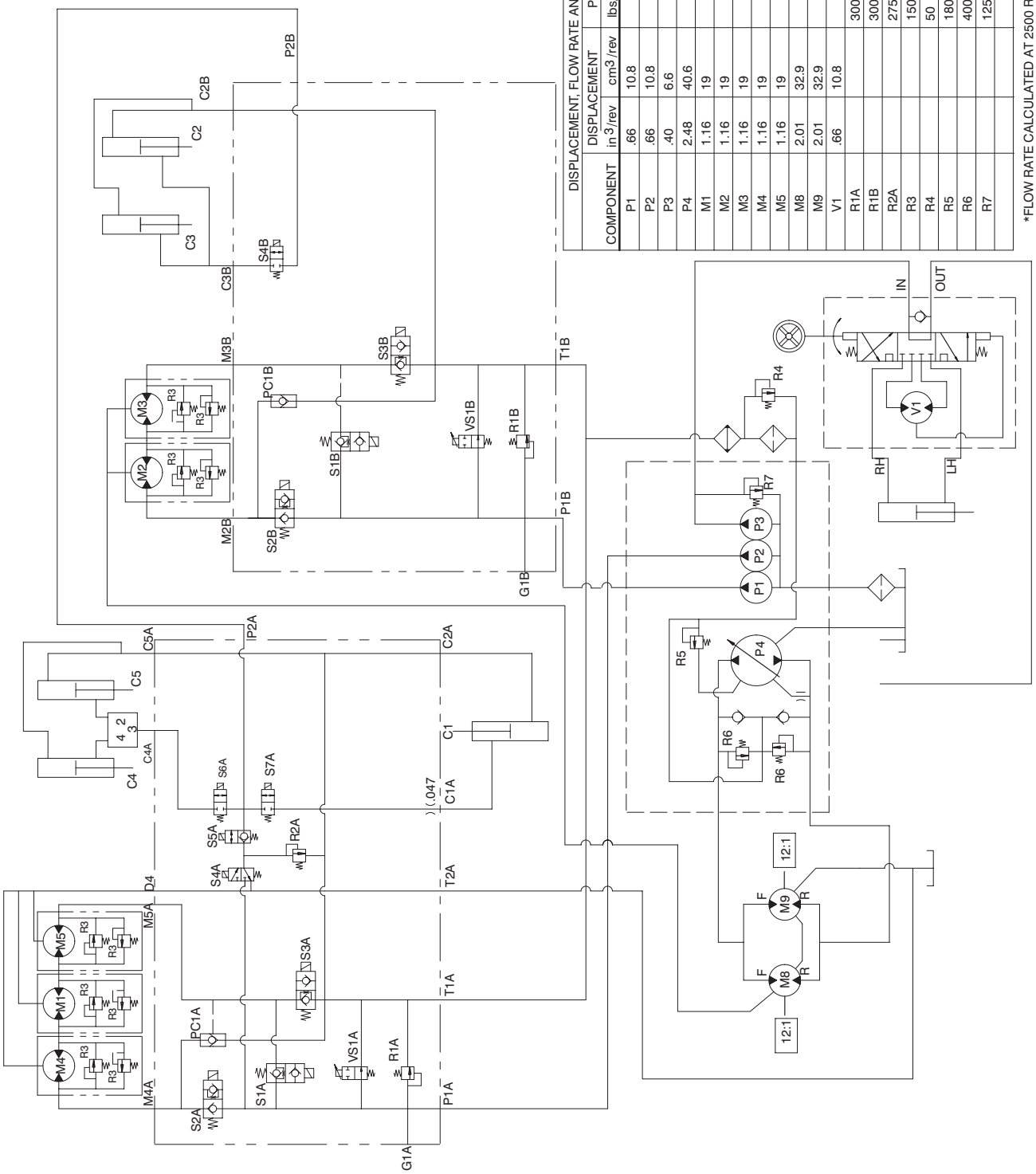

DISPLACEMENT, FLOW RATE AND PRESSURE CHART					
COMPONENT	DISPLACEMENT		PRESSURE		*FLOW RATE
	in^3/rev	cm^3/rev	lbs/in 2	BARS	GPM	LPM
P1	.66	10.8			7.0	26.5
P2	.66	10.8			7.0	26.5
P3	.40	6.6			4.2	15.9
P4	2.48	40.6			26.3	99.5
M1	1.16	19				
M2	1.16	19				
M3	1.16	19				
M4	1.16	19				
M5	1.16	19				
M8	2.01	32.9				
M9	2.01	32.9				
V1	.66	10.8				
R1A			3000	207		
R1B			3000	207		
R2A			2750	190		
R3			1500	103		
R4			50	3		
R5			180	12		
R6			4000	276		
R7			1250	86		

*FLOW RATE CALCULATED AT 2500 RPM AND 98% EFFICIENCY.

T–3505

HYDRAULIC SCHEMATIC
4 WHEEL DRIVE

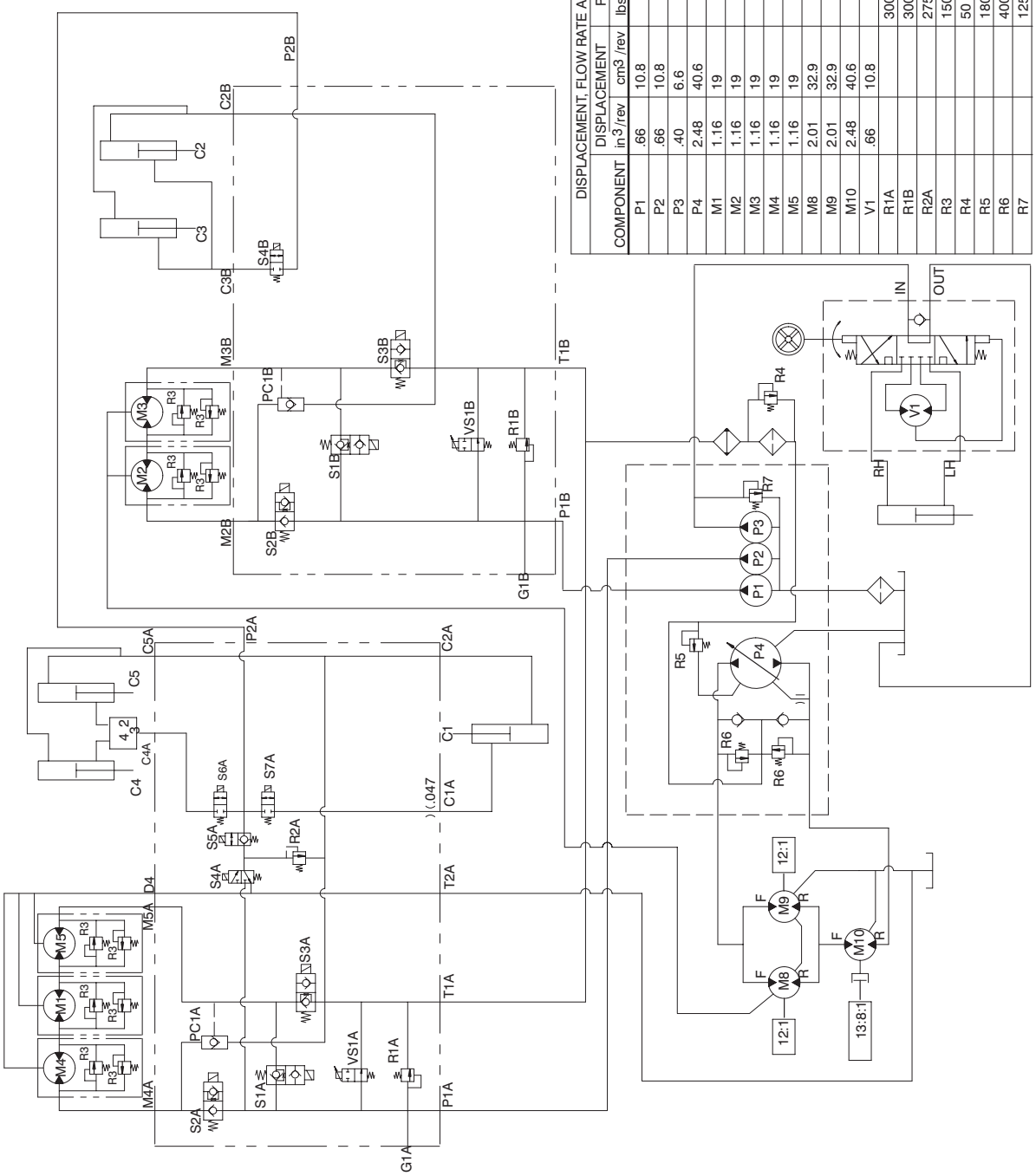

DISPLACEMENT, FLOW RATE AND PRESSURE CHART						
COMPONENT	DISPLACEMENT		PRESSURE		*FLOW RATE	
	in3/rev	cm3 /rev	lbs/in2	BARS	GPM	LPM
P1	.66	10.8			7.0	26.5
P2	.66	10.8			7.0	26.5
P3	.40	6.6			4.2	15.9
P4	2.48	40.6			26.3	99.5
M1	1.16	19				
M2	1.16	19				
M3	1.16	19				
M4	1.16	19				
M5	1.16	19				
M8	2.01	32.9				
M9	2.01	32.9				
M10	2.48	40.6				
V1	.66	10.8				
R1A			3000	207		
R1B			3000	207		
R2A			2750	190		
R3			1500	103		
R4			50	3		
R5			180	12		
R6			4000	276		
R7			1250	86		

*FLOW RATE CALCULATED AT 2500 RPM AND 98% EFFICIENCY.

T–3506

BRAKE MAINTENANCE

ADJUSTING SERVICE BRAKES (Fig. 54)

Adjust the service brakes when there is more than 1 inch of "free travel" of the brake pedal, or when the brakes do not work effectively. Free travel is the distance the brake pedal moves before braking resistance is felt.

1. Disengage locking pin from brake pedals so both pedals work independently of each other.

2. To reduce free travel of brake pedals, tighten the brakes – loosen front nut on threaded end of brake cable. Then tighten rear nut to move cable backward until brake pedals have 1/2 to 1 inch of free travel. Tighten front nuts after brakes are adjusted correctly.

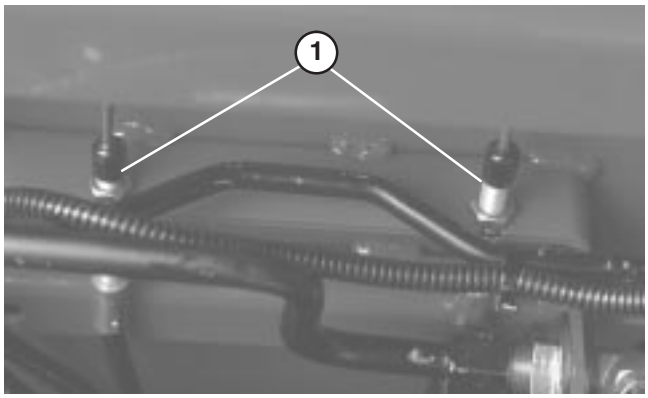

Figure 54
1. Brake Cables

AXLE MAINTENANCE

CAUTION

Before servicing or making adjustments to the machine, stop engine and remove key from the switch.

CHANGING PLANETARY GEAR DRIVE OIL (Fig. 55)

Change oil initially after 200 hours operation and every 800 hours, or yearly. Use high quality SAE 85W–140 wt. gear lube as replacement.

1. With machine on level surface, position wheel so the check/drain plug is at lowest position.

2. Place drain pan under hub, remove plug and allow oil to drain.

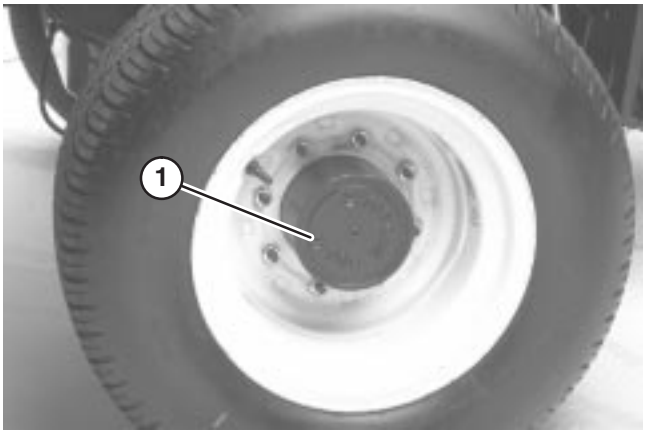

Figure 55
1. Drain/Check Plug

3. When all oil has been drained, position wheel so plug hole is at three or nine o'clock position.

4. Place drain pan under brake hub on other side of wheel.

5. Remove plug from bottom of hub and allow oil to drain.

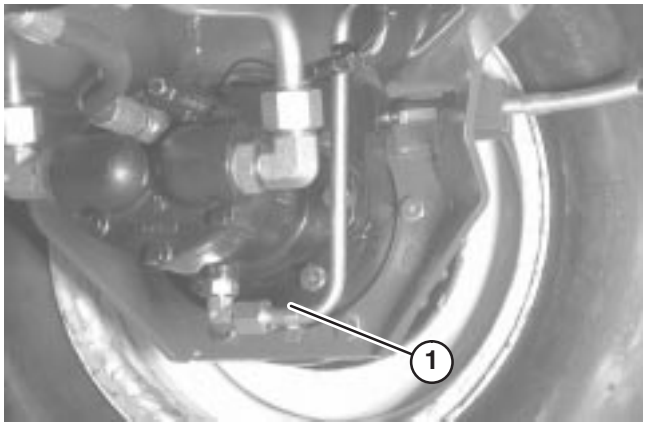

Figure 56
1. Drain Plug Location

6. When all oil has been drained, re–install plug in hub.

7. Add approximately 32 oz. high quality SAE 85W–140 wt. gear lube to bring level up to bottom of hole and install plug.

8. Repeat procedure on the opposite gear assembly.

CHANGING REAR AXLE LUBRICANT (Model 03804 only) (Fig. 57)

After every 800 hours of operation the oil in the rear axle must be changed.

1. Position machine on a level surface.

2. Clean area around the (3) drain plugs, (1) on each end and (1) in the center.

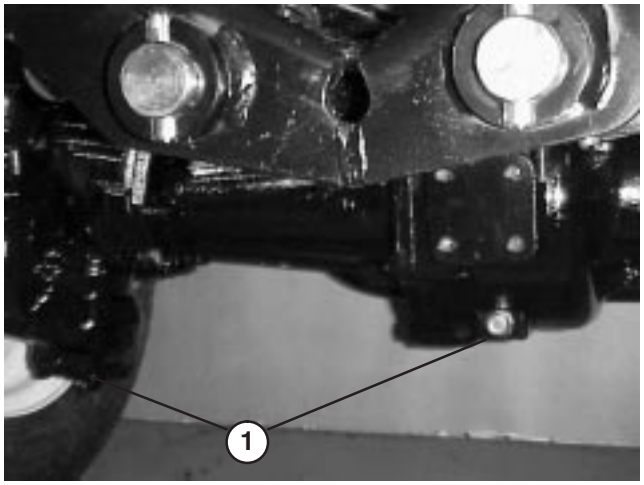

Figure 57
1. Drain Plug Location

3. Remove check plugs to ease draining of oil.

4. Remove drain plugs allowing oil to drain into pans.

5. Remove a check plug and fill axle with approximately 80 oz. of 85W–90 wt. gear lube or until lubricant is up to bottom of hole.

REAR WHEEL TOE–IN

After every 800 operating hours or annually, check rear wheel toe–in.

1. Measure center–to–center distance (at axle height) at front and rear of steering tires. Front measurement must be 1/4 in. less than rear measurement.

2. To adjust**,** loosen clamps at both ends of tie rods.

3. Rotate tie rod end to move front of tire inward or outward.

4. Tighten tie rod clamps when adjustment is correct.

ELECTRICAL MAINTENANCE

BATTERY CARE

IMPORTANT: Before welding on a machine, disconnect both cables from the battery, disconnect both wire harness plugs from the electronic control unit and the terminal connector from the alternator to prevent damage to the electrical system.

CAUTION

Wear safety goggles and rubber gloves when working with electrolyte. Charge the battery in a well ventilated so gases produced while charging can dissipate. Since the gases are explosive, keep open flame and electrical spark away from the battery; do not smoke. Nausea may result if the gases are inhaled. Unplug charger from electrical outlet before connecting to, or disconnecting charger leads from battery posts.

Note: Check battery condition weekly or after every 50 hours of operation. Keep terminals and entire battery case clean because a dirty battery will discharge slowly. To clean the battery, wash the entire case with solution of baking soda and water. Rinse with clear water. Coat the battery posts and cable connectors with Grafo 112X (skin−over) grease (Toro Part No. 505-47) or petroleum jelly to prevent corrosion.

FUSES (Fig. 58)

There are 7 fuses in the machines electrical system. They are located below the operators control panel.

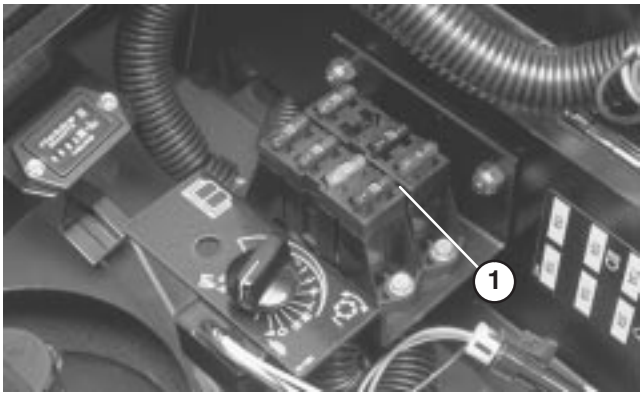

Figure 58
1. Fuses

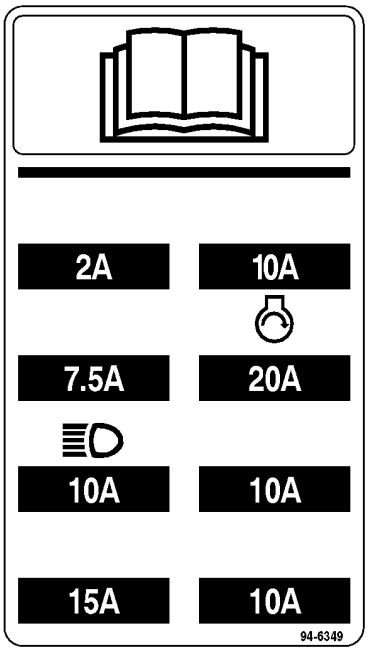

OPTIONAL LIGHTING

IMPORTANT: If optional lighting is be added to the traction unit, use the following schematic and part numbers to prevent damage to the traction units electrical system.

SCHEMATIC FOR OPTIONAL LIGHTING

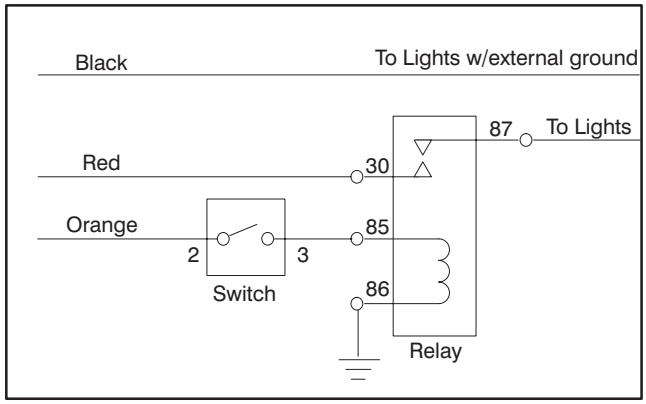

Switch*	Relay
Toro Part No. 75−1010	Toro Part No. 70−1480
Honeywell Part No. 1TL1−2	Bosch Part No. 0−332−204

A Relay Wire Harness (Toro Part No. 77−4200) is available for use when adding electrical accessories such as lights.

Note: When adding a Relay Wire Harness, connect wires as follows:

- **Blue wire to accessory**
- **Red wire to power source**
- **Black wire to ground**
- **Gray wire to on/off switch**

Black, red and orange wires are located in control console.

Add 10 Amp fuse to fuse block at location shown. Do not exceed fuse rating.

*** Punch out in control panel provided for switch installation**

ELECTRICAL SCHEMATIC

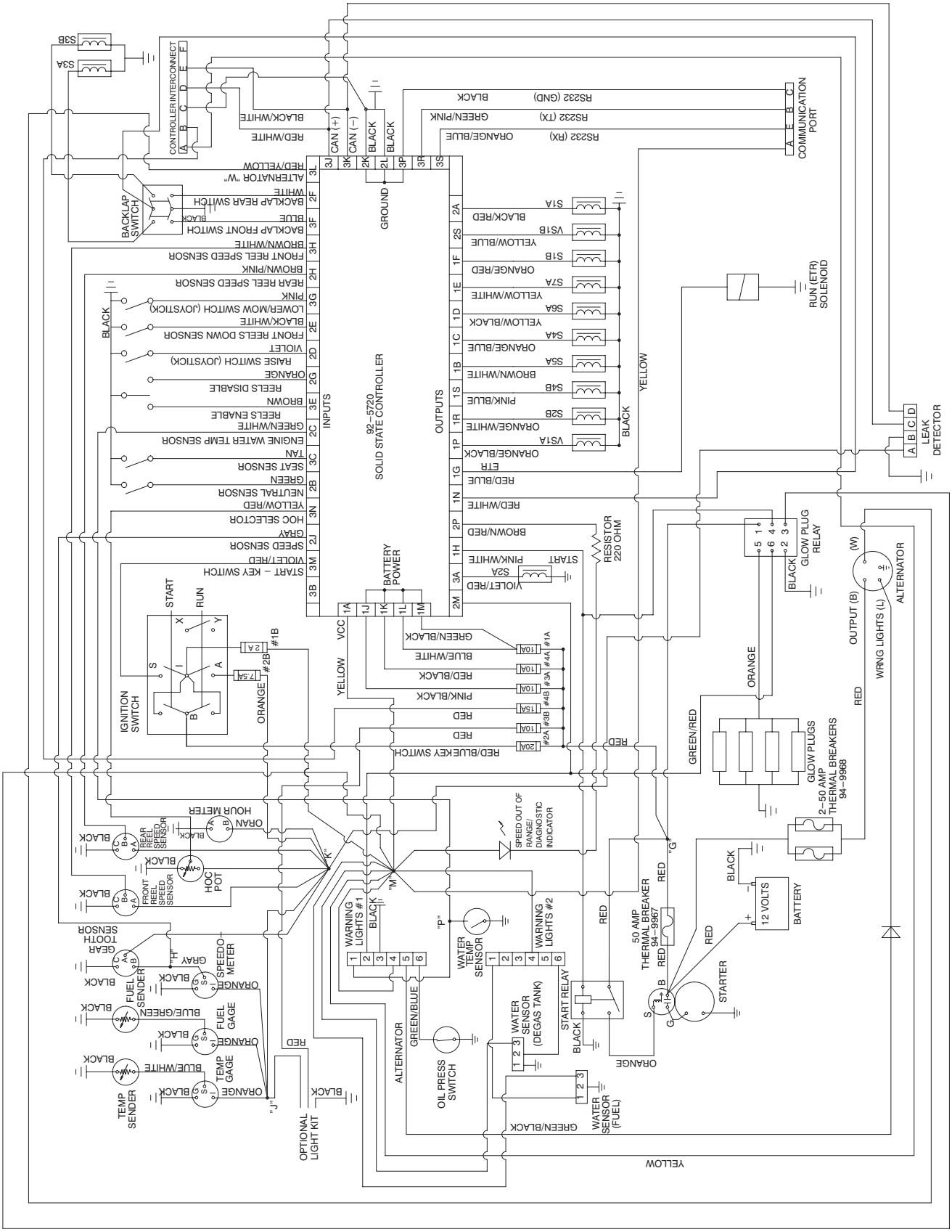

T–2379–7

BACKLAPPING

DANGER

REELS MAY STALL WHILE BACKLAPPING. DO NOT ATTEMPT TO RESTART REELS BY HAND OR TOUCH REELS WHILE BACKLAPPING. STOP ENGINE AND TURN H.O.C. KNOB ONE POSITION TOWARD ”A”.

NOTE: When backlapping, the front units all operate together, and the rear units operate together.

1. Position the machine on a level surface, lower the cutting units, stop the engine, engage the parking brake, and move the Enable/Disable switch to disable position.

2. Unlock and raise the seat to expose controls.

3. Open control cover and turn the H.O.C. selection knob to position “P” (Fig. 59).

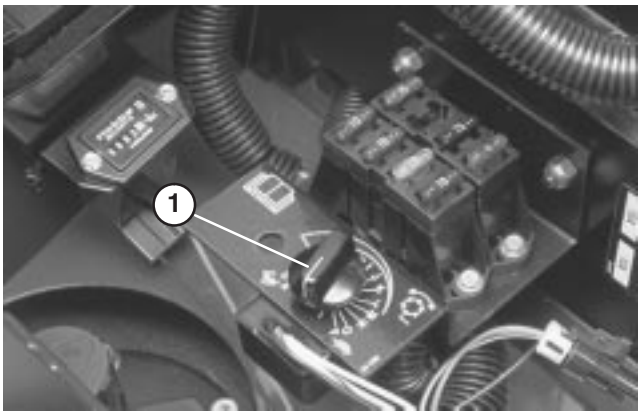

Figure 59

1. H.O.C. Selector Knob

NOTE: Backlapping speed may be increased by moving the H.O.C. selection knob toward “A”. Each position will increase speed approximately 60 rpm. After changing selector, wait 30 seconds for the system to respond to the new speed target.

4. Make initial reel to bedknife adjustments appropriate for backlapping on all cutting units which are to be backlapped.

5. Start engine and run at idle speed.

DANGER: To avoid personal injury, never place hands or feet in reel area while engine is running. Changing engine speed while backlapping may cause reels to stall. Never change engine speed while backlapping. Only backlap at idle engine speed. Never attempt to turn reels by hand or foot while engine is running.

6. Select either front or rear on the backlap switch to determine whether front or rear reels will be backlapped.

DANGER: To avoid personal injury, be certain that you are clear of the cutting units before proceeding.

7. Move Enable/Disable switch to Enable position. Move Lower Mow / Lift control forward to start back−lapping operation on designated reels.

8. Apply lapping compound with a long handle brush (Toro Part No. 29−9100). Never use a short handled brush (Fig. 60).

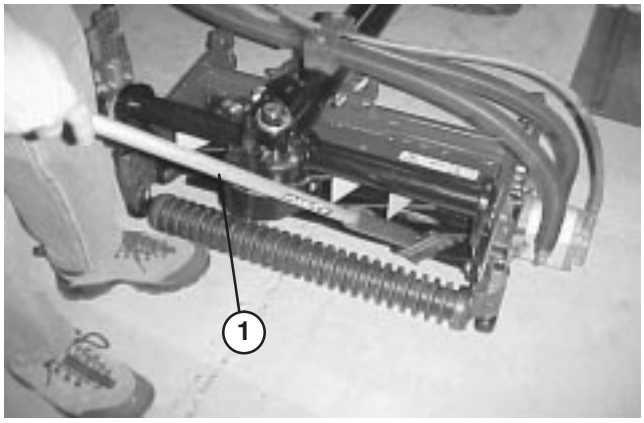

Figure 60

1. Long handle brush

9. If reels stall or become erratic while backlapping, the reel control light will begin to blink and the reels will turn off. If this occurs, turn the H.O.C. selection knob one position closer to “A”. Then, toggle the Enable/Disable switch to the disable position followed by the enable position. To resume backlapping, move the Lower Mow / Lift control lever forward.

10. To make an adjustment to the cutting units while backlapping, turn reels OFF by moving the Lower Mow/Raise lever rearward; move the Enable/Disable switch to Disable and turn the engine OFF. After adjustments have been completed, repeat steps 5 − 9.

11. Backlap until a small burr develops across the entire front edge of the bedknife.

12. Repeat procedure for all cutting units to be backlapped.

13. When backlap operation has been completed, return the backlap switch to OFF, lower seat and wash all lapping compound off cutting units. Adjust cutting unit reel to bedknife as needed.

IMPORTANT: If the backlap switch is not returned to OFF position after backlapping, the cutting units will not raise or function properly.

PREPARATION FOR SEASONAL STORAGE

Traction Unit

1. Thoroughly clean the traction unit, cutting units and the engine.

2. Check the tire pressure. Inflate all tires to 15−20 psi.

3. Check all fasteners for looseness; tighten as necessary.

4. Grease or oil all grease fittings and pivot points. Wipe up any excess lubricant.

5. Lightly sand and use touch−up paint on painted areas that are scratched, chipped, or rusted. Repair any dents in the metal body.

6. Service the battery and cables as follows:

a. Remove the battery terminals from the battery posts.

b. Clean the battery, terminals, and posts with a wire brush and baking soda solution.

c. Coat the cable terminals and battery posts with Grafo 112X skin−over grease (Toro Part No. 505-47) or petroleum jelly to prevent corrosion.

d. Slowly recharge the battery every 60 days for 24 hours to prevent lead sulfation of the battery.

Engine

1. Drain the engine oil from the oil pan and replace the drain plug.

2. Remove and discard the oil filter. Install a new oil filter.

3. Refill oil pan with 5.3 quarts of SAE15W-40 CD, CE, CF, CF−4 or CG−4 motor oil.

4. Start the engine and run at idle speed for approximately two minutes.

5. Stop the engine.

6. Flush the fuel tank with fresh, clean diesel fuel.

7. Re−secure all fuel system fittings.

8. Thoroughly clean and service the air cleaner assembly.

9. Seal the air cleaner inlet and the exhaust outlet with weatherproof tape.

10. Check anti freeze protection and add a 50/50 solution of water and Peugeot recommended anti freeze (Part No. 93−7213) or equivalent as needed for expected minimum temperature in your area.

NOTES

The Toro General Commercial Products Warranty

A Two-Year Limited Warranty

Conditions and Products Covered

The Toro Company and its affiliate, Toro Warranty Company, pursuant to an agreement between them, jointly warrant your 1996 or newer Toro Commercial Product ("Product") purchased after January 1, 1997, to be free from defects in materials or workmanship for two years or 1500 operational hours*, whichever occurs first. Where a warrantable condition exists, we will repair the Product at no cost to you including diagnosis, labor, parts, and transportation. This warranty begins on the date the Product is delivered to the original retail purchaser.

* Product equipped with hour meter

Instructions for Obtaining Warranty Service

You are responsible for notifying the Commercial Products Distributor or Authorized Commercial Products Dealer from whom you purchased the Product as soon as you believe a warrantable condition exists.

If you need help locating a Commercial Products Distributor or Authorized Dealer, or if you have questions regarding your warranty rights or responsibilities, you may contact us at:

Toro Commercial Products Service Department
Toro Warranty Company
8111 Lyndale Avenue South
Bloomington, MN 55420-1196
612-888-8801
800-982-2740
E–mail: commercial.service@toro.com

Owner Responsibilities

As the Product owner, you are responsible for required maintenance and adjustments stated in your operator's manual. Failure to perform required maintenance and adjustments can be grounds for disallowing a warranty claim.

Items and Conditions Not Covered

Not all product failures or malfunctions that occur during the warranty period are defects in materials or workmanship. This express warranty does not cover:

- Product failures which result from the use of non-Toro replacement parts, or from installation and use of add-on, modified, or unapproved accessories.
- Product failures which result from failure to perform required maintenance and/or adjustments.
- Product failures which result from operating the Product in an abusive, negligent or reckless manner.
- Parts subject to consumption through use unless found to be defective. Examples of parts which are consumed, or used up, during normal Product operation include, but are not limited to, blades, reels, bedknives, tines, spark plugs, castor wheels, tires, filters, belts, etc.
- Failures caused by outside influence. Items considered to be outside influence include, but are not limited to, weather, storage practices, contamination, use of unapproved coolants, lubricants, additives, or chemicals, etc.
- Normal "wear and tear" items. Normal "wear and tear" includes, but is not limited to, damage to seats due to wear or abrasion, worn painted surfaces, scratched decals or windows, etc.

Parts

Parts scheduled for replacement as required maintenance are warranted for the period of time up to the scheduled replacement time for that part.

Parts replaced under this warranty become the property of Toro. Toro will make the final decision whether to repair any existing part or assembly or replace it. Toro may use factory remanufactured parts rather than new parts for some warranty repairs.

General Conditions

Repair by an Authorized Toro Distributor or Dealer is your sole remedy under this warranty.

Neither The Toro Company nor Toro Warranty Company is liable for indirect, incidental or consequential damages in connection with the use of the Toro Products covered by this warranty, including any cost or expense of providing substitute equipment or service during reasonable periods of malfunction or non-use pending completion of repairs under this warranty. Except for the Emissions warranty referenced below, if applicable, there is no other express warranty. All implied warranties of merchantability and fitness for use are limited to the duration of this express warranty.

Some states do not allow exclusions of incidental or consequential damages, or limitations on how long an implied warranty lasts, so the above exclusions and limitations may not apply to you.

This warranty gives you specific legal rights, and you may also have other rights which vary from state to state.

Note regarding engine warranty: The Emissions Control System on your Product may be covered by a separate warranty meeting requirements established by the U.S. Environmental Protection Agency (EPA) and/or the California Air Resources Board (CARB). The hour limitations set forth above do not apply to the Emissions Control System Warranty. Refer to the Engine Emission Control Warranty Statement printed in your operator's manual or contained in the engine manufacturer's documentation for details.

Countries Other than the United States or Canada

Customers who have purchased Toro products exported from the United States or Canada should contact their Toro Distributor (Dealer) to obtain guarantee policies for your country, province, or state. If for any reason you are dissatisfied with your Distributor's service or have difficulty obtaining guarantee information, contact the Toro importer. If all other remedies fail, you may contact us at Toro Warranty Company.

Rev. 12/09/1999