Form No. 3323–692

Proline 12.5 HP

Mid–Size Traction Unit

Model No. 30193–200000001 and Up

Parts Catalog

Ordering Replacement Parts

To order replacement parts, please supply: the part number, the quantity, and the description of each part desired.

Understanding Reference Numbers

Each identified part in an illustration has a reference number. The reference number for a part also appears in the parts list, along with other information about the part.

This catalog uses two special reference number formats, one to indicate parts in a service assembly and another to indicate the quantity of a given part in an illustration.

Service Assembly Reference Numbers

Parts in service assemblies have reference numbers in the form **a:b.** The **a** represents the reference number of the entire service assembly and the **b** represents a sequential number unique to each part within the service assembly.

For example, a wheel assembly might be identified by reference number **6**, the tire by **6:1**, the valve by **6:2**, and the wheel by **6:3**. When you order the assembly identified by reference number 6, you receive all parts identified by reference numbers 6:1, 6:2, and 6:3. However, you may also order any part individually.

Reference numbers of this type appear in illustrations and in part lists.

Reference Numbers Indicating Quantity

In an illustration, if a reference number indicates more than one part, the reference number has the form **nX y.** The **n** represents the quantity of the part, the **X** is the multiplication symbol, and the **y** represents the reference number.

For example, in an illustration, the reference number **2X 37** means that two of the parts identified by reference number 37 are indicated.

© The TORO Company — 1999
All Rights Reserved

Contents

Description	Page
Engine & Fuel System Assembly	3
Transmission & Drive Pulley Assembly	4
Wheel Drive Assembly	5
Upper Handle Assembly	6
36” Deck Assembly	7
Front Casters, & Blade Brake Assembly	8
Front Casters, & Blade Brake Assembly (cont.)	9
Spindle Assembly	10
Schematic	11
Crankcase	12
Piston / Crankshaft	13
Valve / Camshaft	14
Lubrication Equipment	15
Cooling Equipment	16
Electric Equipment	17
Control Equipment	18
Carburetor	19
Air Filter	20
Starter	21
Starter	22
Muffler	23
Peerless Transmission Model 700–070A	24
Peerless Transmission Model 700–070A (cont.)	25
Maintenance	26–27

Accessories

Description	Model / Part No.
Recycler Kit	Model No. 30142
Bagging Kit	Model No. 30198
Low Sail Blade	Part No. E633485

Part Description Abbreviations

Part descriptions in this catalog may include the following abbreviations.

Abbreviation	Meaning
AR	as required
ASM	assembly
CARR	carriage
DEG	degrees
FH	flat head
GA	gauge
HF	hex flange
HH	hex head
HHF	hex head flange
HLH	hex lag head
HJ	hex jam
HOC	height-of-cut
HS	hex socket
HSBH	hex socket button head
HSFH	hex socket flat head
HSH	hex socket head
HWH	hex washer head
HWHTF	hex washer head thread forming
INC	incorporated
LH	left hand
NI	nylon insert
PPH	Phillips pan head
PTH	Phillips truss head
PTO	power take off
RH	right hand
SFH	slotted fillister head
SHH	slotted hex head
SQH	square head
SHWH	slotted hex washer head
SPH	slotted pan head
SRH	slotted round head
STD	standard
TAP	self tapping
TTH	Torx truss head
WH	wing head

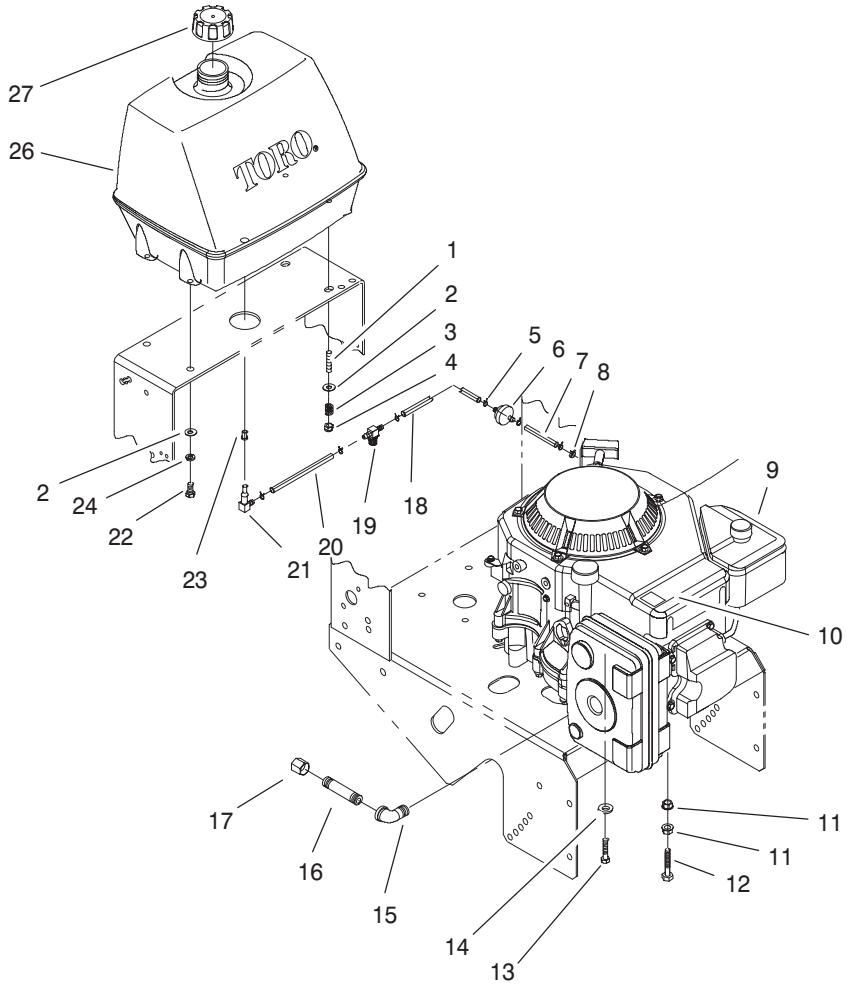

Sheet No.:2

Engine & Fuel System Assembly

Ref. No.	Part No.	Qty.	Description
1	E633023	2	Stud
2	3256–23	4	Washer–Flat
3	E633349	2	Spring–Tank, Fuel
4	3296–47	2	Nut–Lock, NI
5	E303077	5	Clamp – Gas Line
6	E303197	1	Filter – Gas
7	E303022	1	Fuel Line – 8.5 Inch
8	E303308	1	Clamp – Fuel Line
9	E303476	1	Engine – 12.5 Kaw
10	63–8440	1	Decal – Hot Surface
11	3290–357	2	Nut–Flange, Lock
12	323–13	1	Screw–HH
13	33114–025	4	Screw–HH
14	E303334	4	Washer–Disc Spring
15	E303431	1	Elbow–90° St Brass
16	E323326	1	Nipple – 3/8 Npt Sch40
17	E543233	1	Nut–Cap
18	E603776	1	Fuel Line – 2.5 Inch
19	E603770	1	Valve – Gas
20	E603955	1	Fuel Line – 6 Inch
21	E543277	1	Elbow–Tank, Fuel
22	322–3	2	Screw–HH
23	E513645	1	Bushing–Valve, Fuel
24	3253–4	2	Washer–Lock/Sp

Ref. No.	Part No.	Qty.	Description
26	E323551	1	Tank – Fuel
27	E513508	1	Cap – Tank, Fuel
*99	E303335	1	Tie–Plastic
*99	E303287	1	Tie–Plastic

* Not illustrated

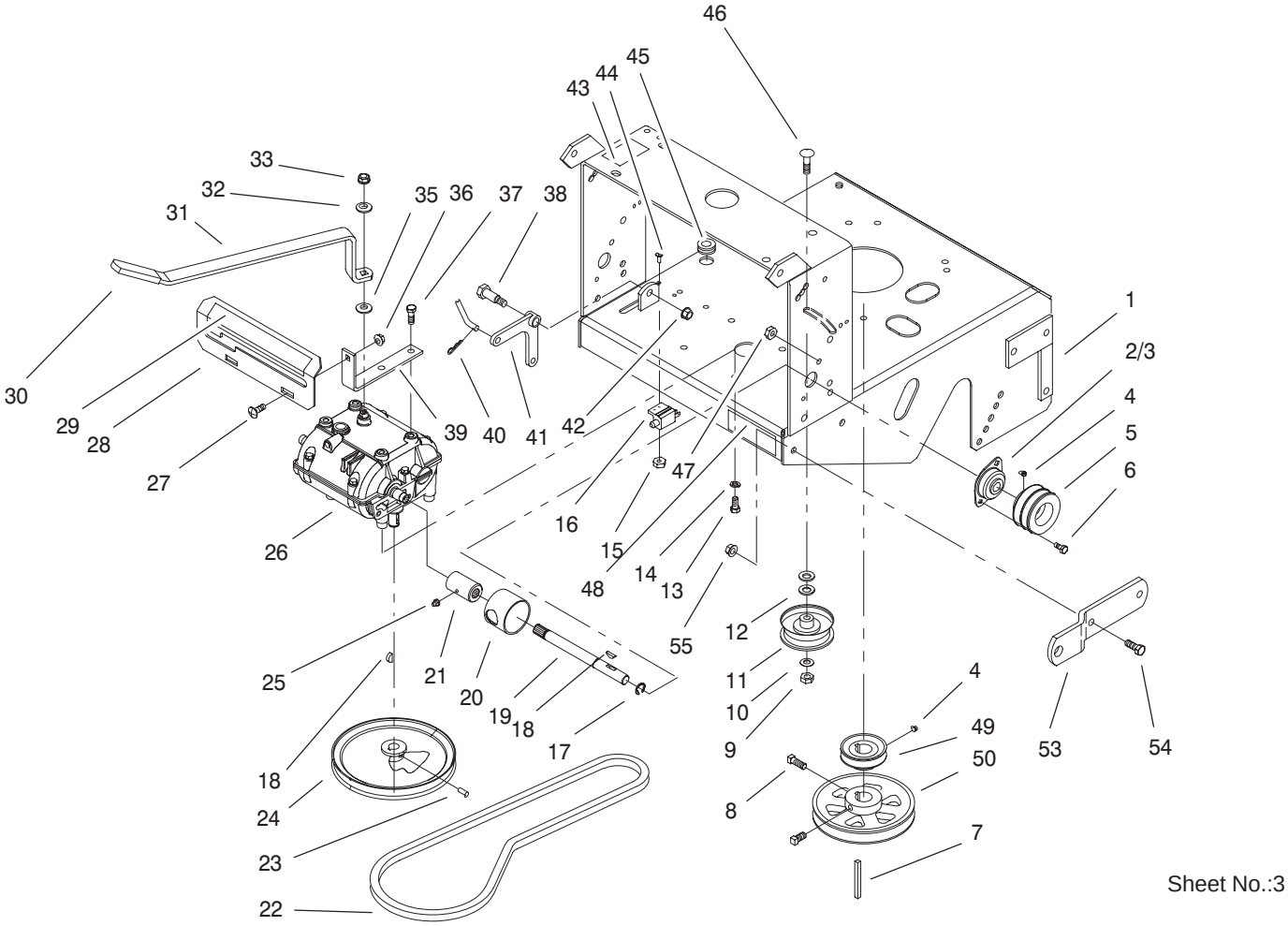

Transmission & Drive Pulley Assembly

Ref. No.	Part No.	Qty.	Description
1	E402112	1	Rear Deck Weldment
2	E323252	2	Bearing Trans Shaft
3	E323254	2	Flange, Output
4	E803310	3	Screw–Set
5	E323257	2	Sheave,Wheel Drive
6	321–3	4	Screw–HH
7	E807264	1	Key–Mach
8	3242–4	2	Screw–Set,SQH
9	3296–39	1	Nut–Lock, NI
10	3256–24	1	Washer–Flat
11	E323285	1	Idler Pulley, Trans
12	3256–5	2	Washer–Flat
13	322–3	4	Screw–HH
14	3253–4	4	Washer–Lock/Sp
15	3296–2	2	Nut–Lock
16	E513152	1	Switch–Seat
17	E808523	2	Ring,Retng Ext Wlds
18	E807009	3	Key–Woodruff
19	E323502	2	Output Shaft, Trans
20	51–4220	2	Guard–Coupler
21	E323680	2	Coupling
22	E323630	1	Belt–Trans Drive
23	E803293	2	Screw–Set
24	E323278	1	Sheave, Trans Drive
25	302–19	2	Fitting – Grease
26	E323500	1	Transmission

Ref. No.	Part No.	Qty.	Description
27	3230–1	2	Screw–CARR
28	E323387	1	Shifter Plate
29	E323560	1	Decal–Ground Speed
30	E303020	1	Grip
31	E323570	1	Lever–Shift
32	E303327	1	Washer–Spring, Disc
33	3296–6	1	Nut–Lock, NI
35	E323379	1	Washer, Shifter Lever
36	32128–20	2	Nut–HF
37	32104–32	4	Screw–HH
38	E603403	1	Bolt–Shoulder
39	E323389	2	Leg – Shifter Lever
40	3290–307	1	Hairpin
41	E303186	1	Bell Crank
42	3290–357	1	Nut–Flange, Lock
43	95–2814	1	Decal – Fuel Shut Off
44	E803028	2	Screw
45	E543296	1	Grommet–Line, Fuel
46	E807511	1	Bolt–Carriage
47	3296–42	4	Nut–Lock
48	E323562	1	Decal – Caution
49	E323256	1	Sheave,Trans Drive
50	E303555	1	Pulley–Blade Drive
53	E323318	2	Hitch – Bracket
54	323–6	4	Screw–HH
55	3290–357	4	Nut–Flange, Lock

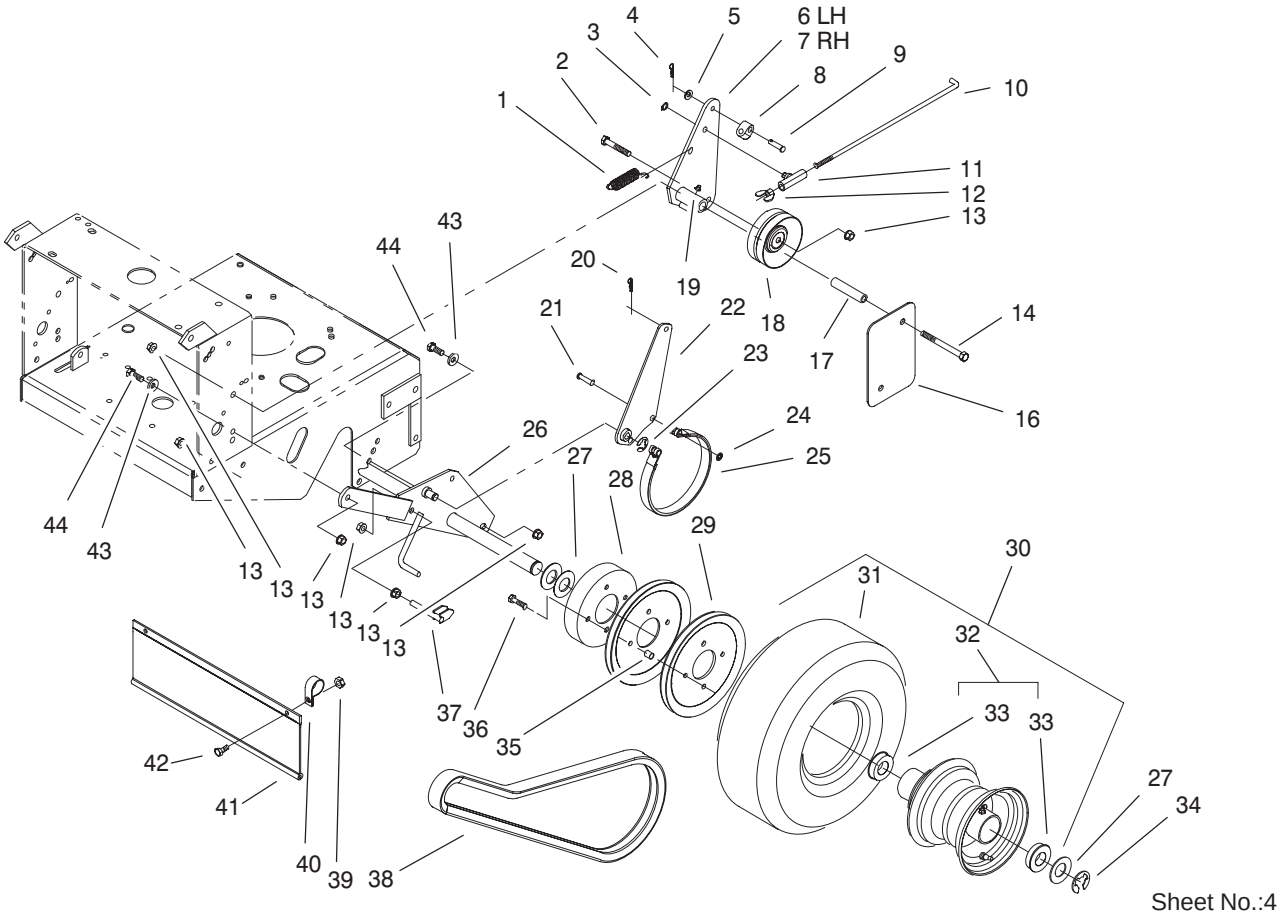

Sheet No.:4

Wheel Drive Assembly

Ref. No.	Part No.	Qty.	Description
1	E323574	2	Spring–Extension
2	323–10	2	Screw–HH
3	E808522	2	Ring,Klip
4	3290–307	2	Hairpin
5	3256–23	2	Washer–Flat
6	E322205	1	LH Idler Arm ASM
7	E322206	1	RH Idler Arm ASM
8	74–0521	2	Fitting–Rod
9	283–6	2	Pin–Clevis
10	E323296	2	Brake Rod
11	E322125	2	Swivel–Brake
12	E513959	2	Wingnut–Nylok
13	3290–357	14	Nut–Flange, Lock
14	323–16	4	Screw–HH
16	E323632	2	Shield, Whl Dr Pntd
17	E323694	4	Idler
18	E323634	2	Idler Pulley,Wheel Drive
19	302–19	2	Fitting – Grease
20	3290–307	2	Hairpin
21	E323307	4	Pin, Clevis
22	E322209	2	Brake Arm ASM,Welded
23	E808501	2	Ring,Snap E
24	E803051	4	Nut–Push
25	E323595	2	Band–Brake

Ref. No.	Part No.	Qty.	Description
26	E322212	1	Axle ASM, Welded
27	E543436	8	Spacer–18 GA
27	E523157	6	Spacer
28	E323261	2	Drum–Brake
29	E323253	4	Sheave
30	E323276	2	Wheel/Tire ASM
31	E303125	2	Tire
32	E323328	2	Rim Only w/Bearings
33	E323329	4	Bearing
34	E808519	2	Ring,Snap E
35	E323260	8	Spacer
36	E803054	8	Bolt–Whiz Lock
37	E412358	2	Scraper
38	E323631	2	Belt–Driver
39	3296–29	2	Nut–Lock,NI
40	2412–104	2	R Clamp
41	E323607	1	Shield–Trailing
42	322–3	2	Screw–HH
43	E303327	4	Washer–Spring, Disc
44	323–6	4	Screw–HH

3323–692

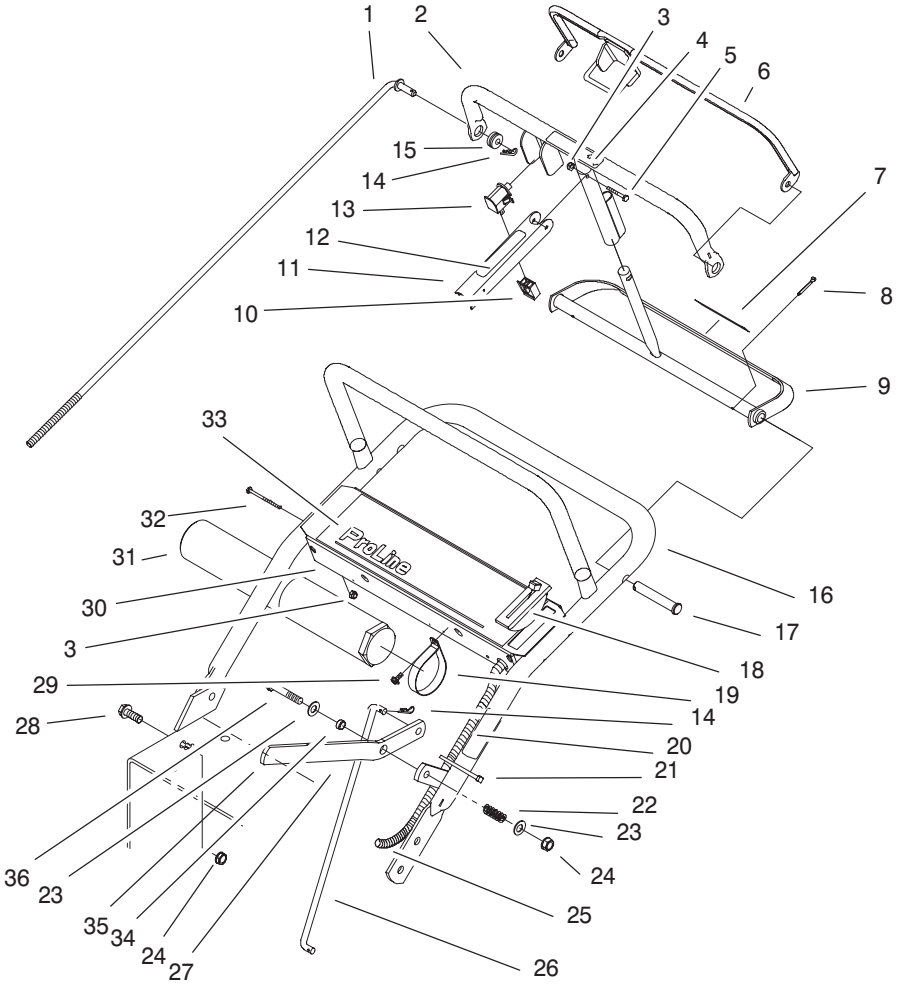

Sheet No.:5

Upper Handle Assembly

Ref. No.	Part No.	Qty.	Description
1	E323569	2	Rod–Control
2	E322215	1	Control Bar
3	3296–2	5	Nut–Lock
4	82–2290	1	Decal – Control Bar
5	32105–1	1	Screw–Srh
6	E322208	1	Bail ASM
7	82–2280	1	Decal–Reverse Handle
8	3272–11	2	Pin–Cotter
9	99–8501	1	Pivot–Control
10	218–595	1	Connector–Body
11	E323614	1	Lever–Parking Brake
12	E323558	1	Decal–Parking Brake
13	740275	1	Switch,Seat
14	3290–307	3	Hairpin
15	237–141	2	Grommet–Rubber
16	E322216	1	Upper Handle ASM
17	283–55	2	Pin–Clevis
18	E323637	1	Throttle Control
19	2412–120	2	R–Clamp
20	E323563	1	Decal–Blade Engagement
21	3290–378	1	Tie–Cable
22	E303160	1	Spring
23	3256–24	2	Washer–Flat
24	3296–39	5	Nut–Lock, NI

Ref. No.	Part No.	Qty.	Description
25	98–3257	1	Wire Harness–Kawasaki
26	E323576	1	Linkage–Blade Drive
27	E323573	1	Lever–Blade Engagement
28	323–6	4	Screw–HH
29	32104–76	2	Screw–Acorn Slot
30	E304259	1	Panel–Control w/Decal
31	74–0720	1	Tube–Manual
32	32105–14	4	Screw–Slotted Hd
33	E323564	1	Decal–Panel
34	99–8509	1	Spacer
35	E303020	1	Grip
36	323–10	1	Screw–HH

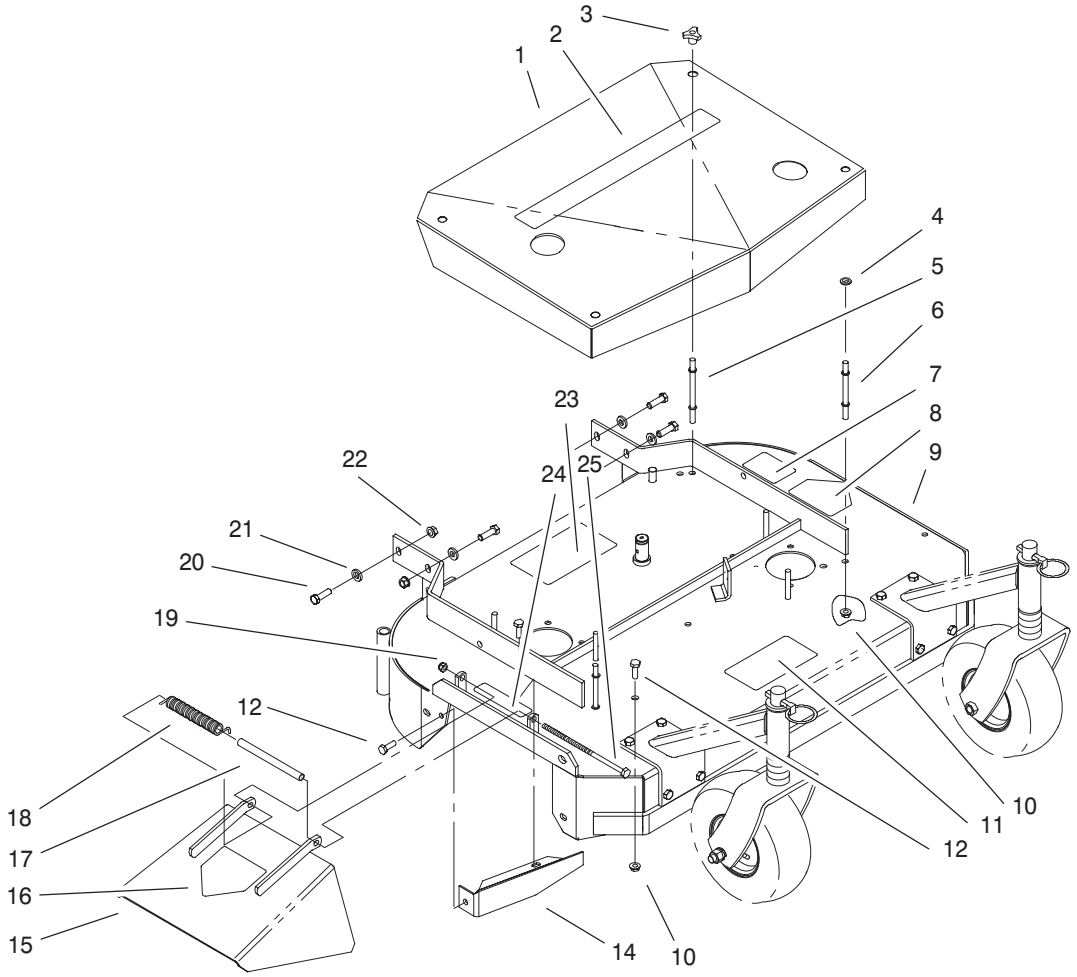

Sheet No.:6

36” Deck Assembly

Ref. No.	Part No.	Qty.	Description
1	E304258	1	Belt Cover w/Decal
2	E323566	1	Decal–Proline 36
3	E323385	4	Knob,Belt Cover
4	E323417	4	Washer,Belt Cover Mount
5	E303536	2	Stud–Belt Shield (Long)
6	E303537	2	Stud–Belt Shield(Short)
7	E323659	1	Torque Decal
8	43–8480	1	Decal–Danger
9	E304273	1	36” Deck w/Decals
10	32128–20	12	Nut–HF
11	66–1340	1	Decal–Danger
12	322–2	8	Screw–HH
14	E302189	1	Baffle Weldment,Dogleg
15	E304256	1	Discharge Chute w/Decal
16	54–9220	1	Decal–Danger
17	E323572	1	Spacer
18	E323575	1	Spring–Deflector
19	3296–29	1	Nut–Lock,NI
20	323–8	6	Screw–HH
21	E303327	6	Washer–Spring, Disc
22	3290–357	6	Nut–Flange, Lock

Ref. No.	Part No.	Qty.	Description
23	98–3296	1	Decal–Belt Routing
24	67–5360	1	Decal–Danger
25	E800289	1	Screw–Cap HH

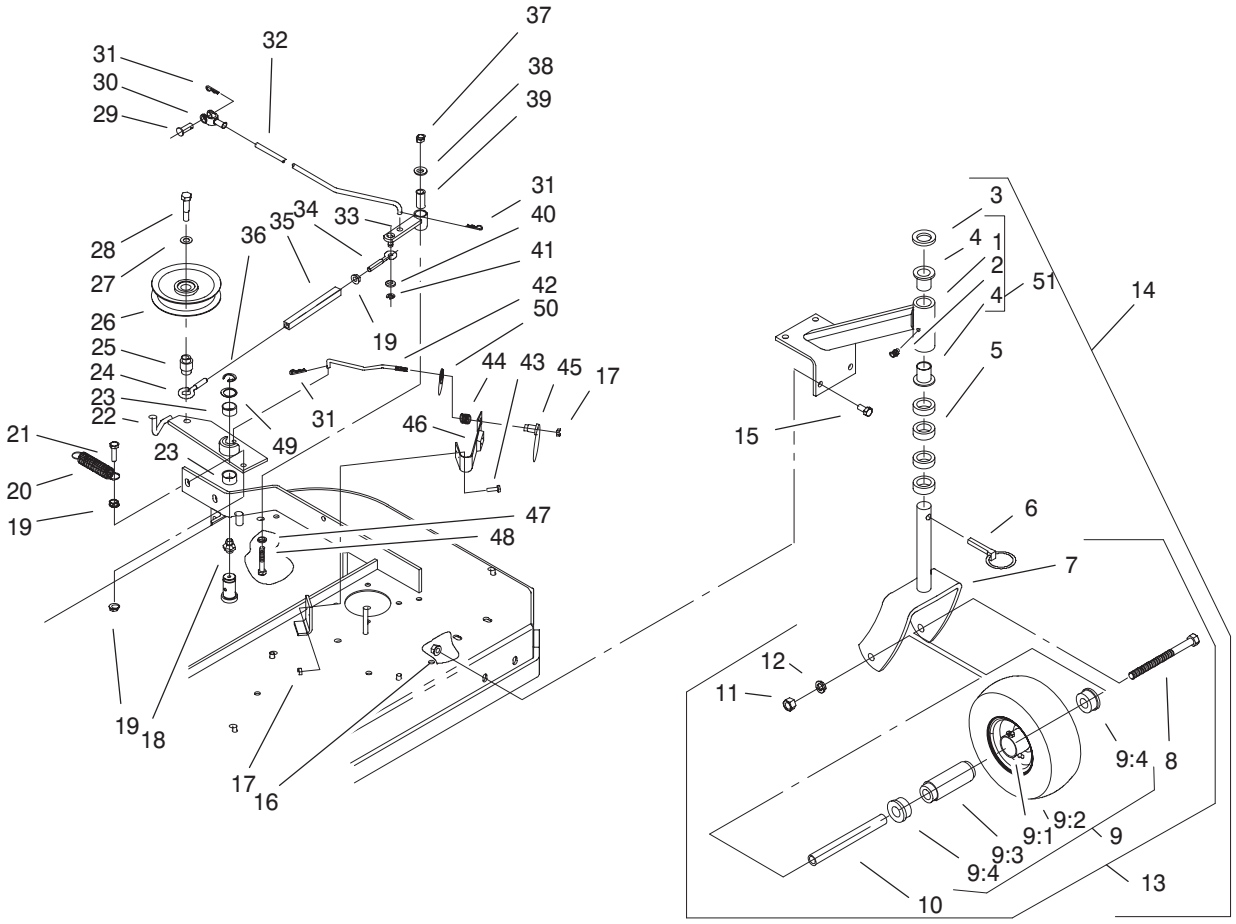

Sheet No.:7

Front Casters, & Blade Brake Assembly

Ref. No.	Part No.	Qty.	Description
1	E302194	2	Support Weldment,Caster
2	302–52	2	Grease Fitting 1/8–27
3	E513338	2	Wshr–Pltd
4	E303514	4	Bearing–Flanged
5	E303314	8	Spacer,10’ Caster
6	E809020	2	Ring–Retaining
7	E322145	2	Fork Wldmnt, Pntd
8	325–20	2	Screw–HH
9	E513648	2	Wheel/Tire ASM
9:1	E513807	1	Assmbly – Wheel Hub
9:2	E513808	1	Tire–9 X 3.50–4 4 Ply
9:3	E513809	1	Bearing
9:4	E513810	2	Bushing
10	E513547	2	Spacer,Front Caster
11	3217–9	2	Nut–Hex
12	3253–7	2	Washer–Lock/Sp
13	E322154	2	Caster/Wheel Assy
14	E322153	2	Caster/Mount ASM
15	323–4	8	Screw–HH
16	3290–357	8	Nut–Flange, Lock
17	3296–42	3	Nut–Lock
18	302–19	1	Fitting – Grease
19	32128–20	3	Nut–HF
20	E323071	1	Spring
21	322–6	1	Screw–HH

Ref. No.	Part No.	Qty.	Description
22	E324408	1	Engagement Arm w/Bushings
23	E323729	2	Bearing–Sleeve
24	E303348	1	Eye Bolt, LH Thread
25	E303434	1	Bushing
26	E603843	1	Pulley–Idler
27	E303327	1	Washer–Spring, Disc
28	323–10	1	Screw–HH
29	E808280	1	Pin–Clevis
30	E303105	1	Yoke–Adjustable
31	3290–307	3	Hairpin
32	E323303	1	Linkage–Assist Arm,Pltd
33	E322235	1	Assist Arm ASM (Welded)
34	E303238	1	Eye Bolt,RH Thread
35	E303236	1	Turnbuckle Body
36	32151–103	1	Ring–Snap
37	3296–29	1	Nut–Lock,NI
38	3256–3	1	Washer–Flat
39	E403179	1	Tube–Pivot
40	3256–23	1	Washer–Flat
41	E808512	1	E–Ring
42	E323715	1	Rod–Brake
43	321–4	2	Screw–HH
44	E323747	1	Spring–Compression

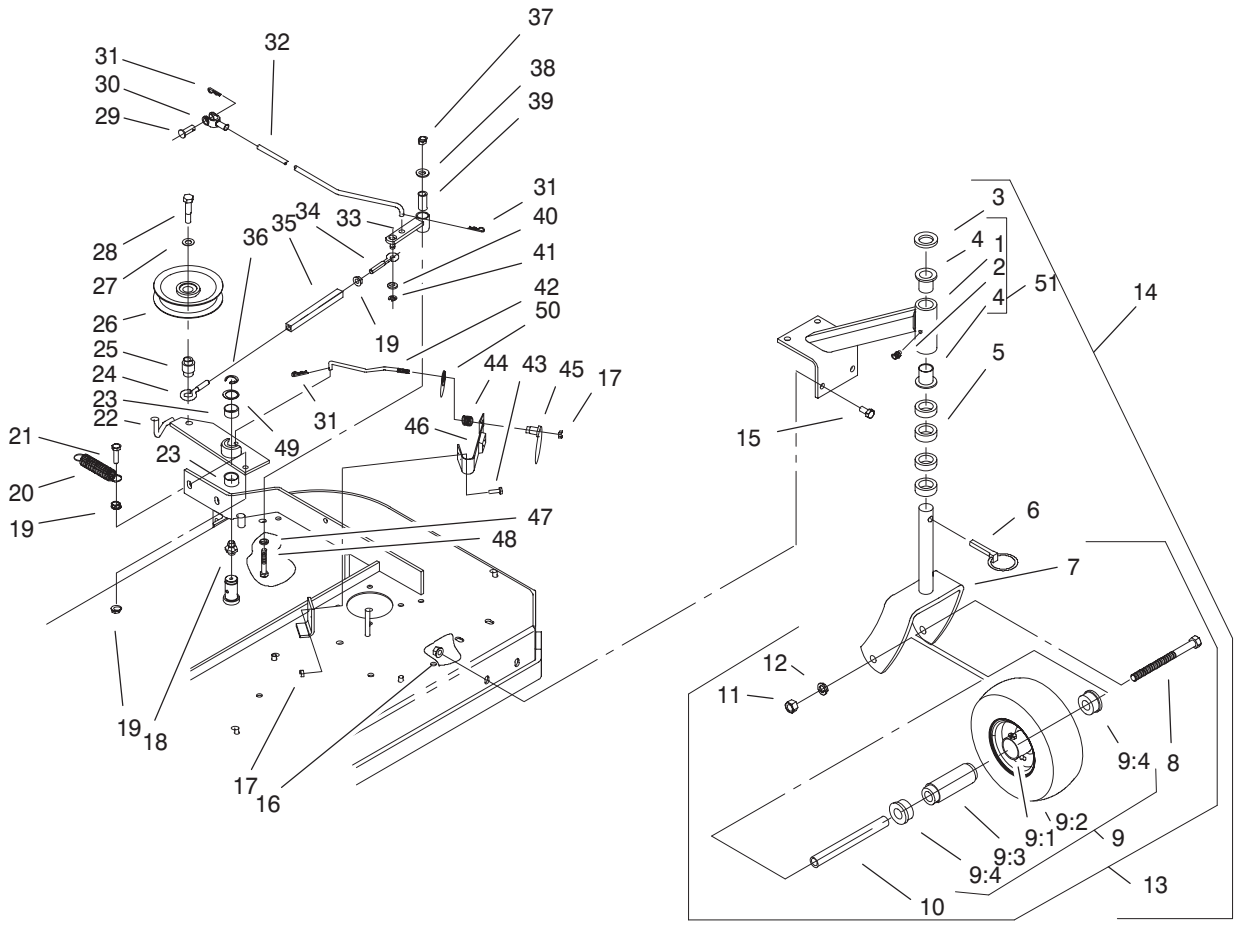

Sheet No.:7

Front Casters, & Blade Brake Assembly (cont.)

Ref. No.	Part No.	Qty.	Description
45	E323746	1	Spacer–Flanged
46	E324372	1	Pad/Spring Assy
47	E303334	1	Washer–Disc Spring
48	322–10	1	Screw–HH
49	E303352	1	Spindle Washer
50	E323748	1	Ring–Push On
51	E302203	2	Support – Caster Wheel

Ref. No.	Part No.	Qty.	Description

3323–692

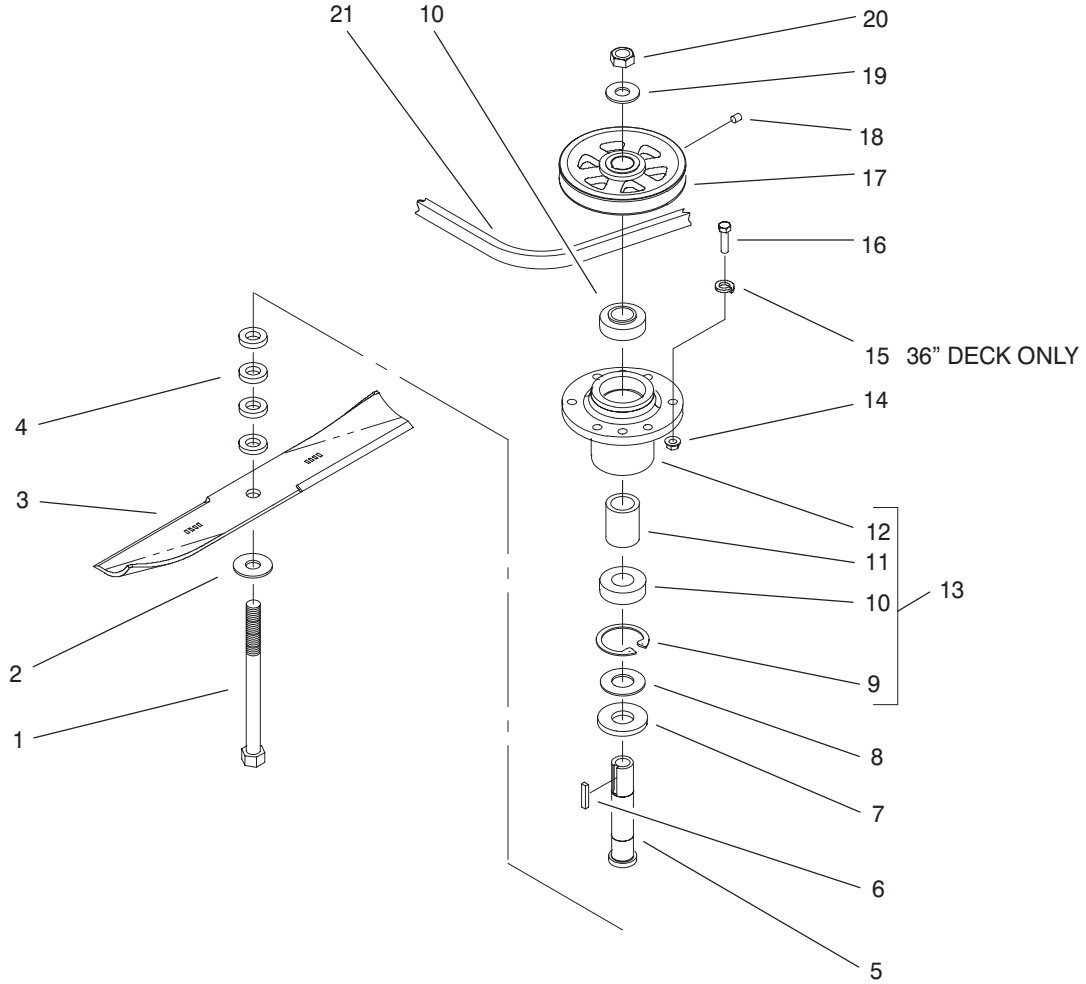

Sheet No.:8

Spindle Assembly

Ref. No.	Part No.	Qty.	Description
1	E800861	2	Screw–Cap HH
2	E513208	2	Spring, Disk
3	E633482	2	Blade,18” High Lift
3	E633485	2	Blade–Low Lift
4	E323539	8	Spacer, Blade Drive
5	E323529	2	Tube Spindle Short
6	E807267	2	Key–Mach Rctgl
7	E633573	2	Guard,Brg–Bottom
8	E323533	2	Spacer, Sheave/Brg
9	E808502	2	Ring,Snap Wlds N5000–206
10	E513016	4	Bearing
11	E323528	2	Spacer, Bearing
12	E323532	2	Housing,Spindle Mach
13	E634619	2	Assembly – Hsg/Bearing
14	32128–20	8	Nut–HF
15	E303334	8	Washer–Disc Spring
16	322–6	8	Screw–HH
17	E403183	2	Sheave
18	E803310	2	Screw–Set
19	E323399	2	Spacer
20	3219–6	2	Nut–Hex
21	E323737	1	Belt

Ref. No.	Part No.	Qty.	Description

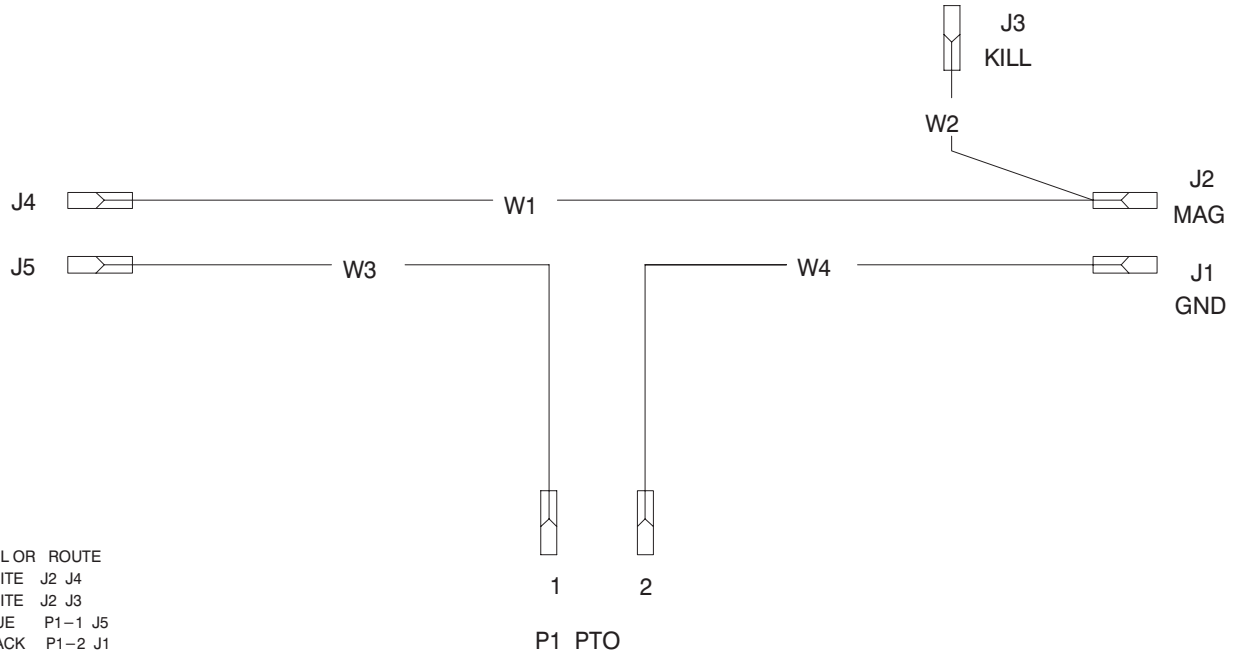

WIRE LIST

DESIG.	AWG	COL OR	ROUTE
W1	16	WHITE	J2 J4
W2	16	WHITE	J2 J3
W3	16	BLUE	P1 – 1 J5
W4	16	BLACK	P1 – 2 J1

Wiring Schematic

Ref. No.	Part No.	Qty.	Description

Ref. No.	Part No.	Qty.	Description

* Order Parts from Kawasaki

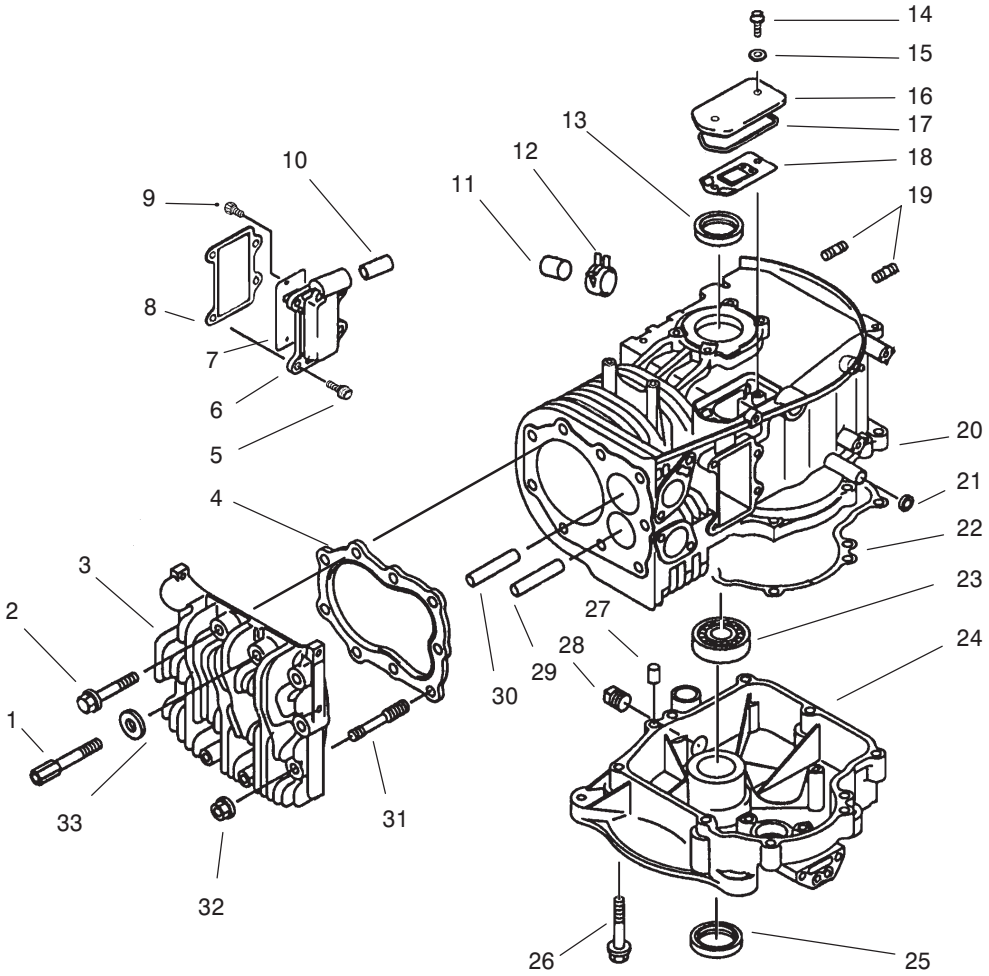

Sheet No.: 201

Crankcase

Ref. No.	Part No.	Qty.	Description
1	92002–2258	2	Bolt
2	130g1055	4	Bolt–Flange
3	11001–2151	1	Head–Cylinder
4	11004–2091	1	Gasket–Head
5	130g0616	4	Bolt–Flange
6	49108–2011	1	Cover–Valve Chamber
7	14025–2143	1	Cover
8	11060–2375	1	Gasket
9	92009–2307	2	Screw
10	92059–2142	1	Tube
11	92066–2096	1	Plug
12	92170–2088	1	Clamp
13	92049–2096	1	Seal–Oil
14	92002–2087	2	Bolt
15	11060–2323	2	Gasket
16	14025–2040	1	Cover–Breather
17	11009–2339	1	Gasket–Cover
18	14069–2062	1	Breather
19	92004–2083	4	Stud–6 X 14
20	49120–6108	1	Crankcase–Complete
21	92049–2097	1	Seal–Oil
22	11060–2015	1	Gasket–Crankcase
23	601a6207	1	Bearing–Ball
24	49015–6176	1	Cover–Crankcase
25	92049–2227	1	Seal–Oil
26	130g0845	8	Bolt–Flange

Ref. No.	Part No.	Qty.	Description
27	92043–1263	2	Pin
28	92066–2097	1	Plug
29	49002–2071	1	Guide–Valve Exhaust
30	49002–2070	1	Guide–Valve Intake
31	92004–2082	3	Stud
32	92015–2115	3	Nut
33	410b1000	2	Washer–Plain

* Order Parts from Kawasaki

3323–692

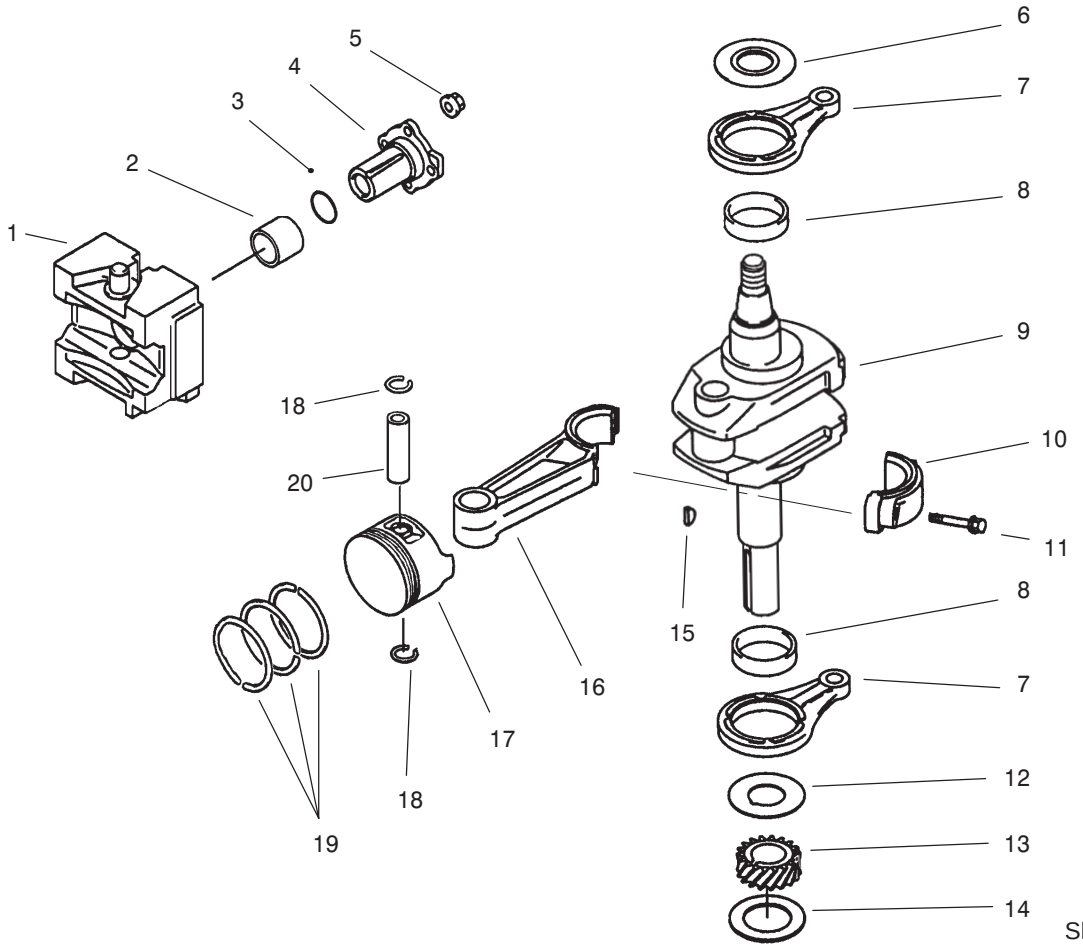

Sheet No.: 202

Piston / Crankshaft

Ref. No.	Part No.	Qty.	Description
1	13042–6006	1	Weight Incl #2
2	92141–2097	1	Bearing–Plane
3	92055–2072	1	O–Ring
4	13107–2253	1	Shaft
5	92015–1193	4	Nut
6	92026–2164	1	Spacer
7	46102–6007	2	Rod Incl #8
8	92141–2108	2	Bearing–Plane
9	49119–2177	1	Crankshaft ASM
11	92150–2193	2	Bolt
12	92026–2156	1	Spacer
13	59056–2105	1	Gear–Helical
14	92025–2145	A/R	Shim T=1.18
14	92025–2146	A/R	Shim T=1.25
14	92025–2147	A/R	Shim T=1.32
14	92025–2148	A/R	Shim T=1.39
14	92025–2149	A/R	Shim T=1.46
14	92025–2150	A/R	Shim T=1.53
14	92025–2151	A/R	Shim T=1.60
14	92025–2152	A/R	Shim T–1.67
14	92025–2153	A/R	Shim T=1.74
14	92180–2015	A/R	Shim T=1.11
14	92180–2016	A/R	Shim T=1.81
15	92038–2094	1	Key
16	13251–6005	1	Rod ASM Incl #10 11

Ref. No.	Part No.	Qty.	Description
16	13251–6007	A/R	Rod ASM Incl #10 11 0.50
17	13001–2096	1	Piston
17	13029–2084	A/R	Piston 0.25
17	13029–2085	A/R	Piston 0.50
18	92033–2176	2	Ring–Snap
19	13008–6009	1	Set–Ring Piston
19	13008–6010	A/R	Set–Ring Piston 0.25
19	13008–6011	A/R	Set–Ring Piston 0.50
20	13002–2066	1	Pin–Piston

* Order Parts from Kawasaki

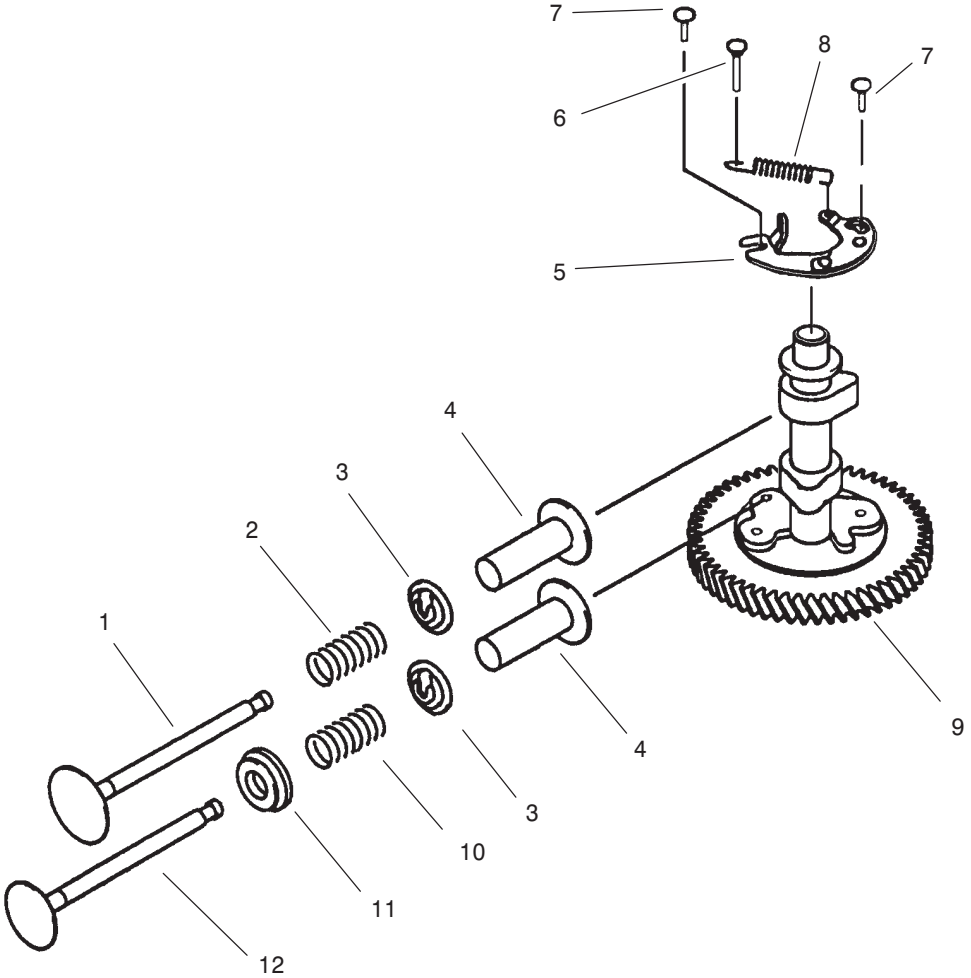

Sheet No.: 203

Valve / Camshaft

Ref. No.	Part No.	Qty.	Description
1	12004–2076	1	Valve–Intake
2	49078–2075	1	Spring–Valve
3	39108–2054	2	Retainer–Spring
4	12032–2058	2	Tappet
5	21118–2068	1	Decompressor
6	92043–2167	1	Pin
7	92043–2113	2	Pin
8	92144–2171	1	Spring
9	49118–2134	1	Camshaft Incl # 5–8
10	49078–2074	1	Spring–Valve
11	12039–2052	1	Rotator
12	12005–2066	1	Valve–Exhaust

Ref. No.	Part No.	Qty.	Description

* Order Parts from Kawasaki

3323–692

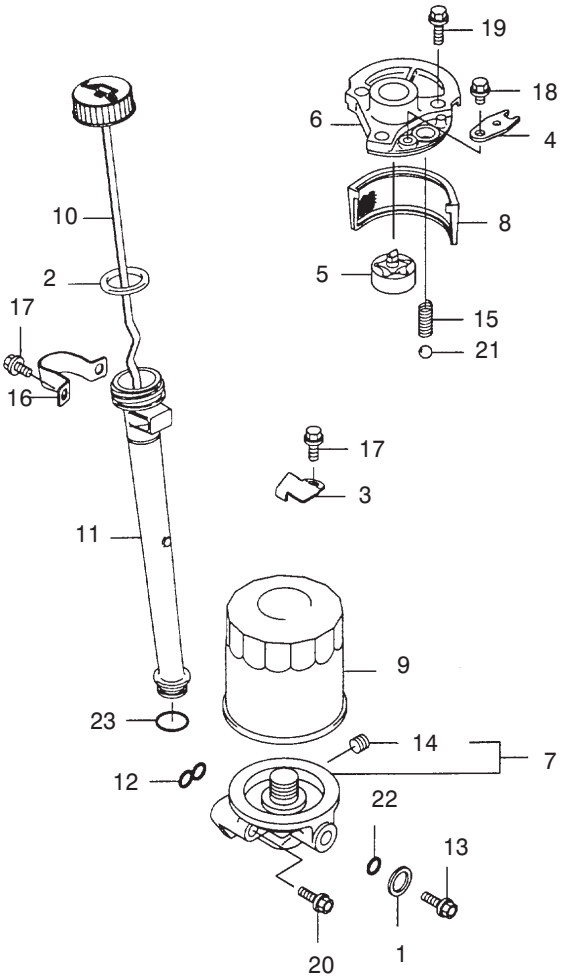

Sheet No.: 204

Lubrication Equipment

Ref. No.	Part No.	Qty.	Description
1	11009–2175	1	Gasket
2	11009–2346	1	Gasket–Oil Gauge
3	13169–2359	1	Plate
4	13270–2054	1	Plate
5	16082–2057	1	Pump Assy–Oil
6	16142–6001	1	Cover–Pump
7	23062–6001	1	Bracket–Comp
8	49065–2056	1	Filter–Oil
9	49065–2071	1	Filter–Oil
10	52005–2058	1	Gauge–Oil
11	59231–2059	1	Filler
12	92055–2063	1	Ring–O
13	92066–2093	1	Plug
14	92066–2211	1	Plug
15	92081–2216	1	Spring
16	92170–2014–9H	1	Clamp
17	130B0508	3	Bolt–Flanged
18	130B610	1	Bolt–Flanged
19	130G0825	3	Bolt–Flanged
20	130G0845	2	Bolt–Flanged
21	600A1000	1	Ball–Steel
22	670D1507	1	O Ring
23	670D2016	1	O Ring

Ref. No.	Part No.	Qty.	Description

* Order Parts from Kawasaki

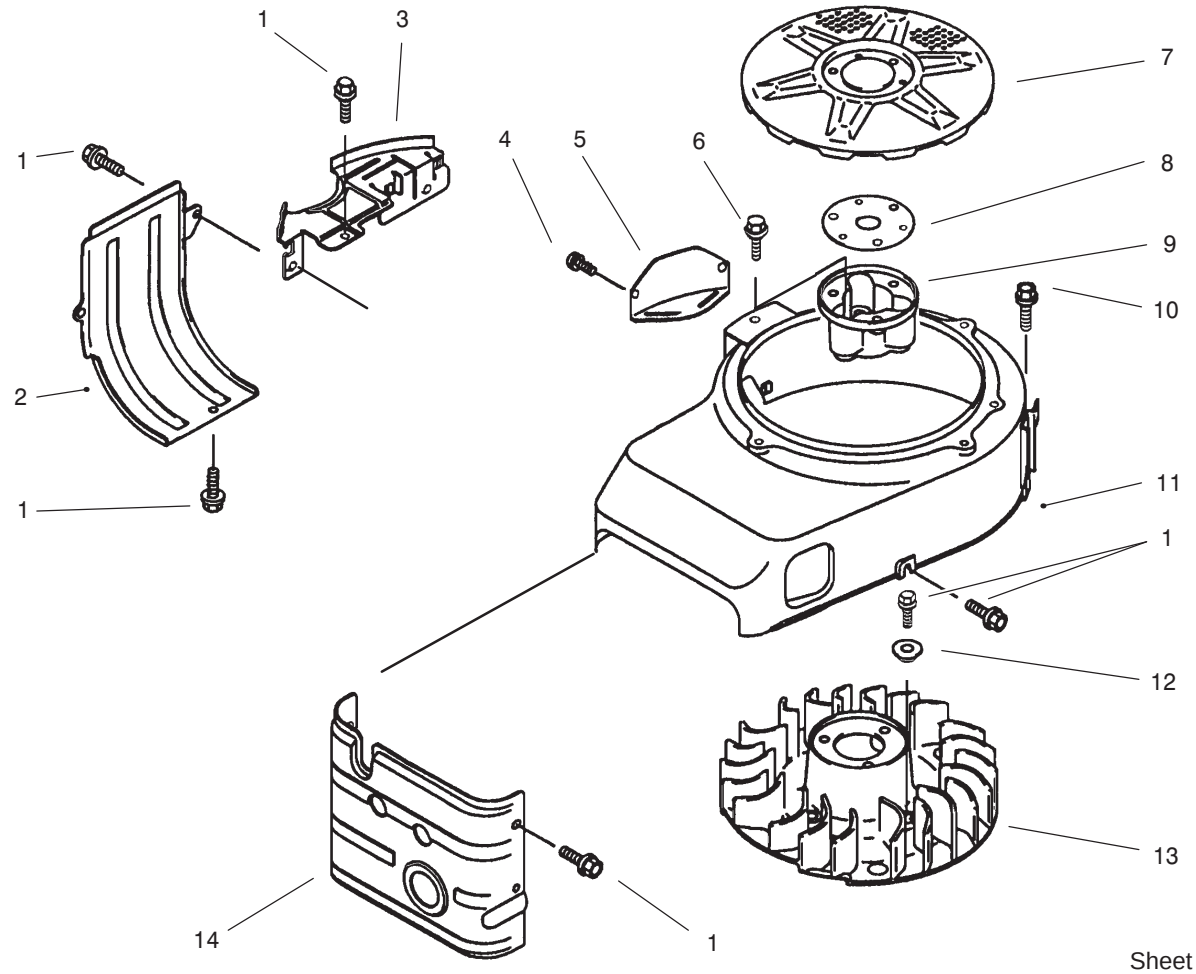

Sheet No.: 205

Cooling Equipment

Ref. No.	Part No.	Qty.	Description
1	130g0610	9	Bolt–Flange
2	49089–2199–9H	1	Shroud–Engine
3	59066–2295–9H	1	Housing–Fan
4	234b0408	2	Screw
5	14024–2038–9H	1	Cover
6	130b0820	3	Bolt–Flange
7	14037–2104–9H	1	Screen
8	92025–2003	A/R	Shim T–1.20
9	11044–2084	1	Bracket
10	130go614	6	Bolt–Flange
11	59066–2677–9H	1	Housing–Fan
12	92143–2179	4	Collar
13	59041–2081	1	Fan
14	49089–2181–9H	1	Shroud–Engine

Ref. No.	Part No.	Qty.	Description

* Order Parts from Kawasaki

3323–692

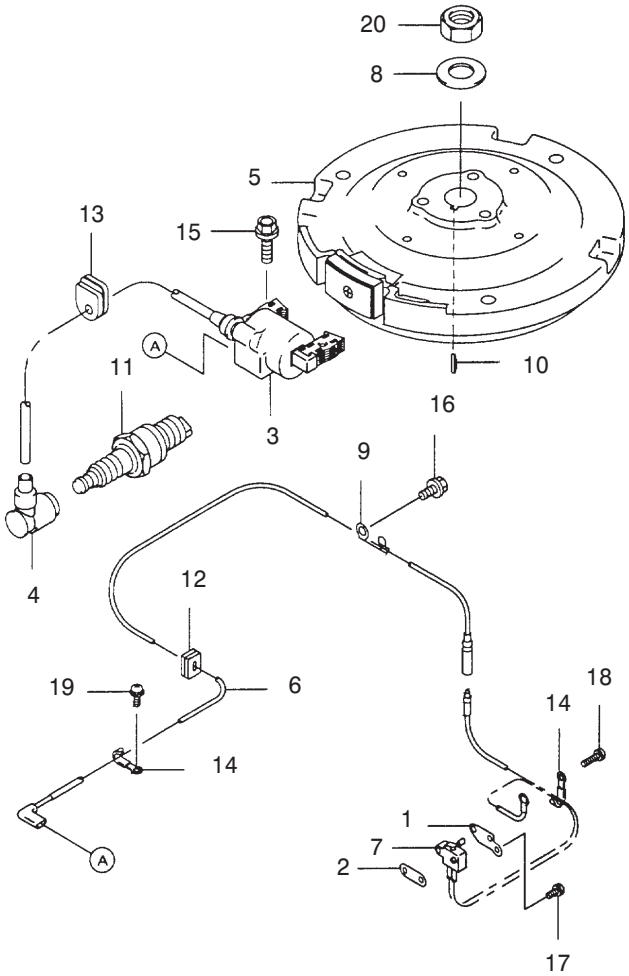

Sheet No.: 206

Electric Equipment

Ref. No.	Part No.	Qty.	Description
1	13183–2373	1	Plate
2	13183–2374	1	Plate
3	21121–2086	1	Coil–Ignition
4	21130–2060	1	Cap–Spark Plug
5	21194–2324	1	Flywheel–Comp
6	26011–2326	1	Wire–Lead L530
7	27010–2167	1	Switch
8	92022–2178	1	Washer
9	92037–2011	1	Clamp
10	92038–2094	1	Key
11	92070–2105	1	Plug–Spark BMR4A (NGK)
12	92071–2099	1	Grommet
13	92071–2100	1	Grommet
14	92170–2029	2	Clamp
15	130B0520	2	Bolt–Flanged
16	130B0610	1	Bolt–Flanged
17	223B0410	1	Screw–Pan Ws Cros
18	233B0416	1	Screw–Pan Ws Cros
19	234B0408	1	Screw–Pan Wsp
20	314G1800	1	Nut–Hex Fine

Ref. No.	Part No.	Qty.	Description

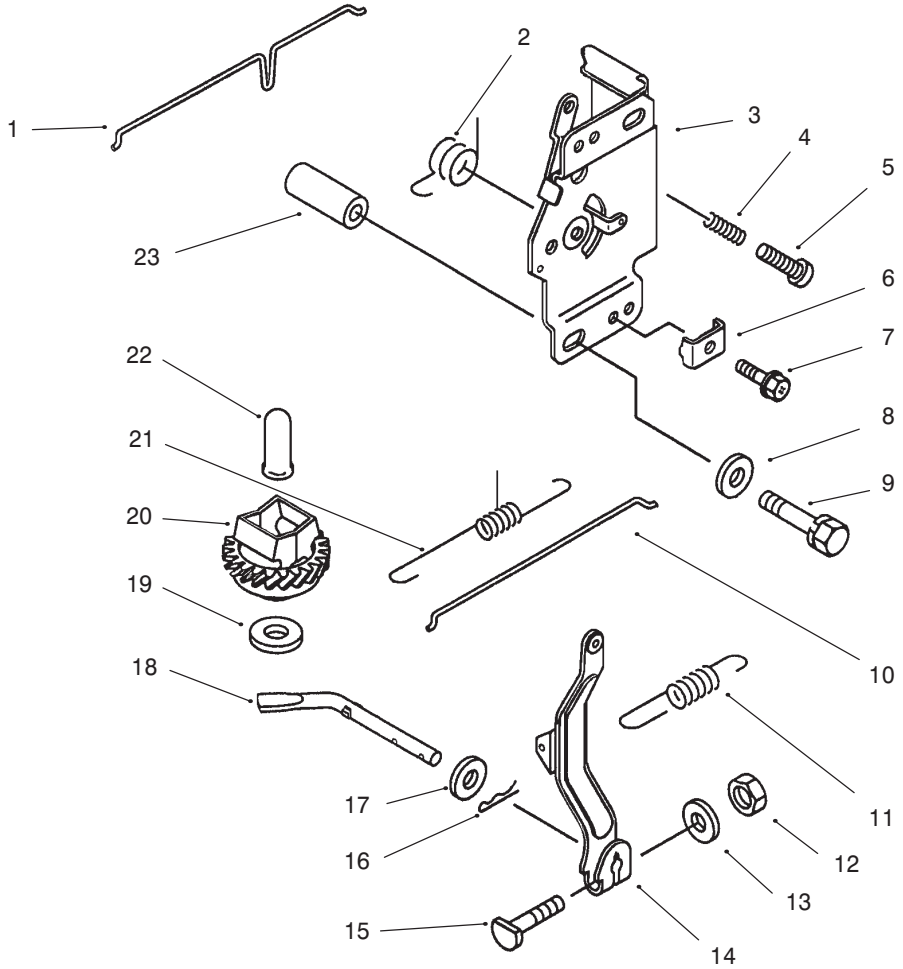

Sheet No.: 207

Control Equipment

Ref. No.	Part No.	Qty.	Description
1	16169–2126	1	Link–Choke
2	92081–2316	1	Spring
3	49113–2090	1	Panel Incl #2 4–7
4	92144–2266	1	Spring
5	214b0416	1	Screw
6	92037–2020	1	Clamp
7	92002–2188	1	Bolt
8	92200–2070	2	Washer
9	180b0650	2	Bolt
10	16171–2083	1	Link
11	92144–2008	1	Spring–Governor
12	311b0600	1	Nut–HH
13	411b0600	1	Washer
14	21187–2052	1	Arm ASM
15	92002–2269	1	Bolt
16	554a0600	1	Pin–Snap
17	92200–2029	1	Washer
18	39003–2072	1	Arm–Pivot
19	92200–2036	1	Washer
20	49110–2084	1	Governor ASM
21	92081–2213	1	Spring
22	42036–2060	1	Sleeve
23	92027–2071	2	Collar

Ref. No.	Part No.	Qty.	Description

* Order Parts from Kawasaki

3323–692

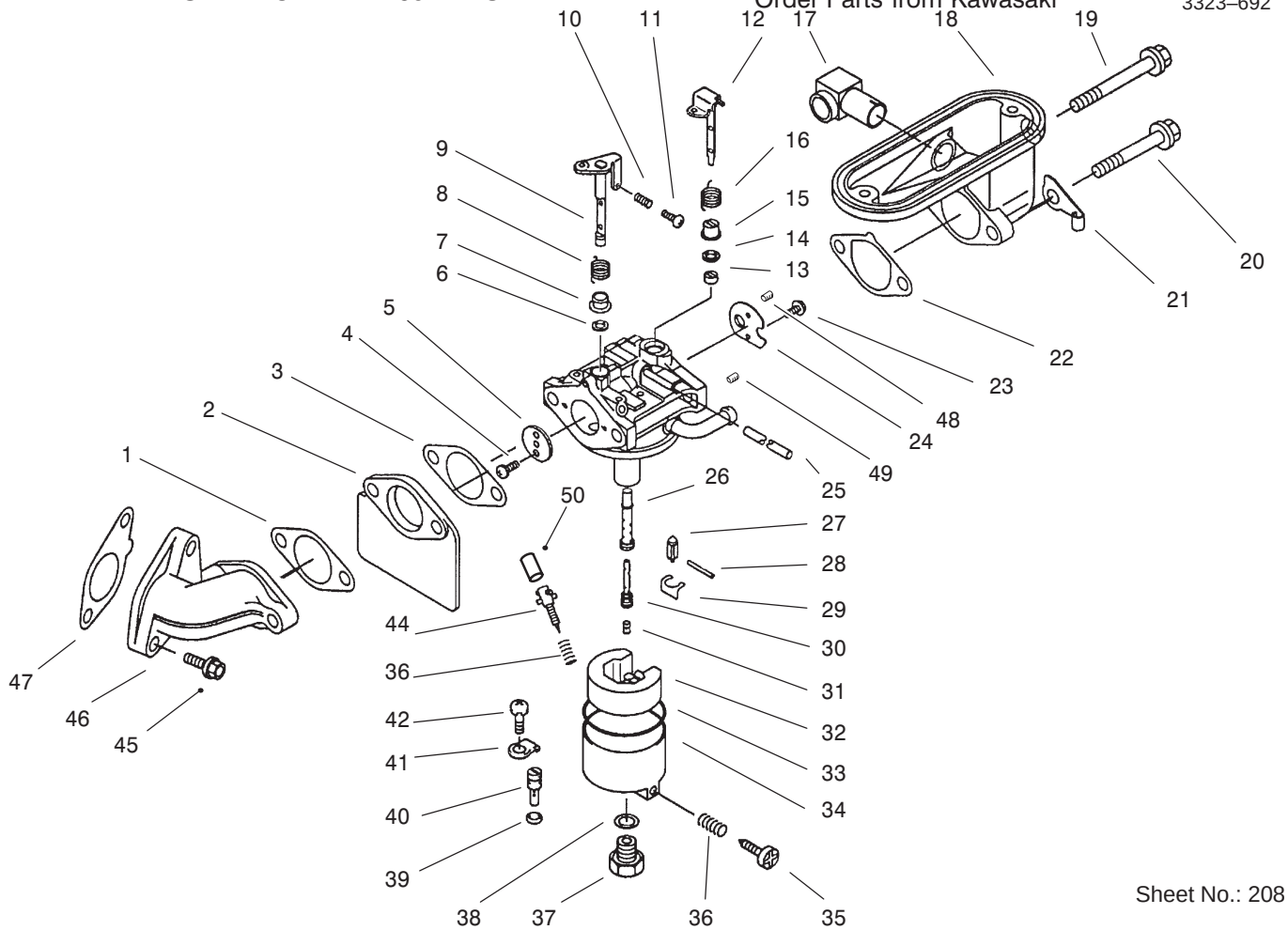

Sheet No.: 208

Carburetor

Ref. No.	Part No.	Qty.	Description
0	15003–2467	1	Carburetor ASM
1	11060–2338	1	Gasket–Intake Pipe
2	16073–2091	1	Insulator
3	11060–2339	2	Gasket–Carburetor
4	92009–2080	2	Screw
5	16025–2141	1	Valve–Throttle #110
6	92093–2082	1	Seal
7	92027–2025	1	Collar
8	92081–2077	1	Spring
9	16041–2009	1	Shaft–Throttle
10	92081–2046	1	Spring
11	92009–2079	1	Screw
12	16041–2010	1	Shaft–Choke
13	92027–2003	1	Collar
14	92093–2069	1	Seal
15	92143–2142	1	Collar
16	92144–2160	1	Spring
17	59071–2062	1	Joint
18	16060–2108	1	Pipe–Intake
19	92002–2254	1	Bolt
20	92002–2253	1	Bolt
21	92170–2019	1	Clamp
22	11060–2338	1	Gasket
23	92009–2081	2	Screw
24	16126–2206	1	Valve–Choke
25	92059–2266	1	Tube

Ref. No.	Part No.	Qty.	Description
26	49121–2207	1	Nozzle–Main #98A
27	16030–2073	1	Valve–Float
28	92043–2006	1	Pin
29	92033–2067	1	Ring–Snap
30	49123–2078	1	Holder–Main Jet
31	92063–2294	1	Jet–Main
32	16031–2066	1	Float
33	11009–2024	1	Gasket
34	16020–2109	1	Chamber–Float Incl 35 36
35	92009–2015	1	Screw
36	92081–2009	2	Spring
37	92150–2146	1	Bolt
38	11009–2025	1	Gasket
39	16038–024	1	Gasket
40	92064–2108	1	Jet–Pilot
41	13183–2252	1	Plate
42	92009–2244	1	Screw
44	16014–2076	1	Screw–Pilot Air
45	130g0825	2	Bolt–Flange
46	16060–2109	1	Pipe–Intake
47	11060–2337	1	Gasket–Intake Pipe
48	16035–2063	1	Jet–Air #0.9
49	16035–2051	1	Jet–Air #1.4
50	39076–2053	1	Limiter

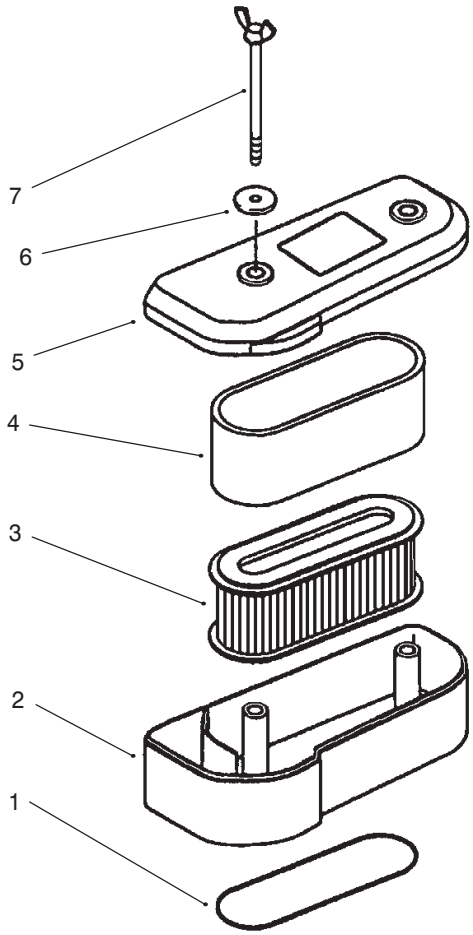

Sheet No.: 210

Air Filter

Ref. No.	Part No.	Qty.	Description
1	11009–2443	1	Gasket–Air Filter
2	11011–2174	1	Case–Air Filter
3	11013–2021	1	Element–Air Filter
4	11013–2020	1	Element–Air Filter
5	11012–2192	1	Cap–Air Filter
6	92022–2220	2	Washer
7	92002–2230	2	Bolt
	11010–2291	1	Filter ASM

Ref. No.	Part No.	Qty.	Description

* Order Parts from Kawasaki

3323–692

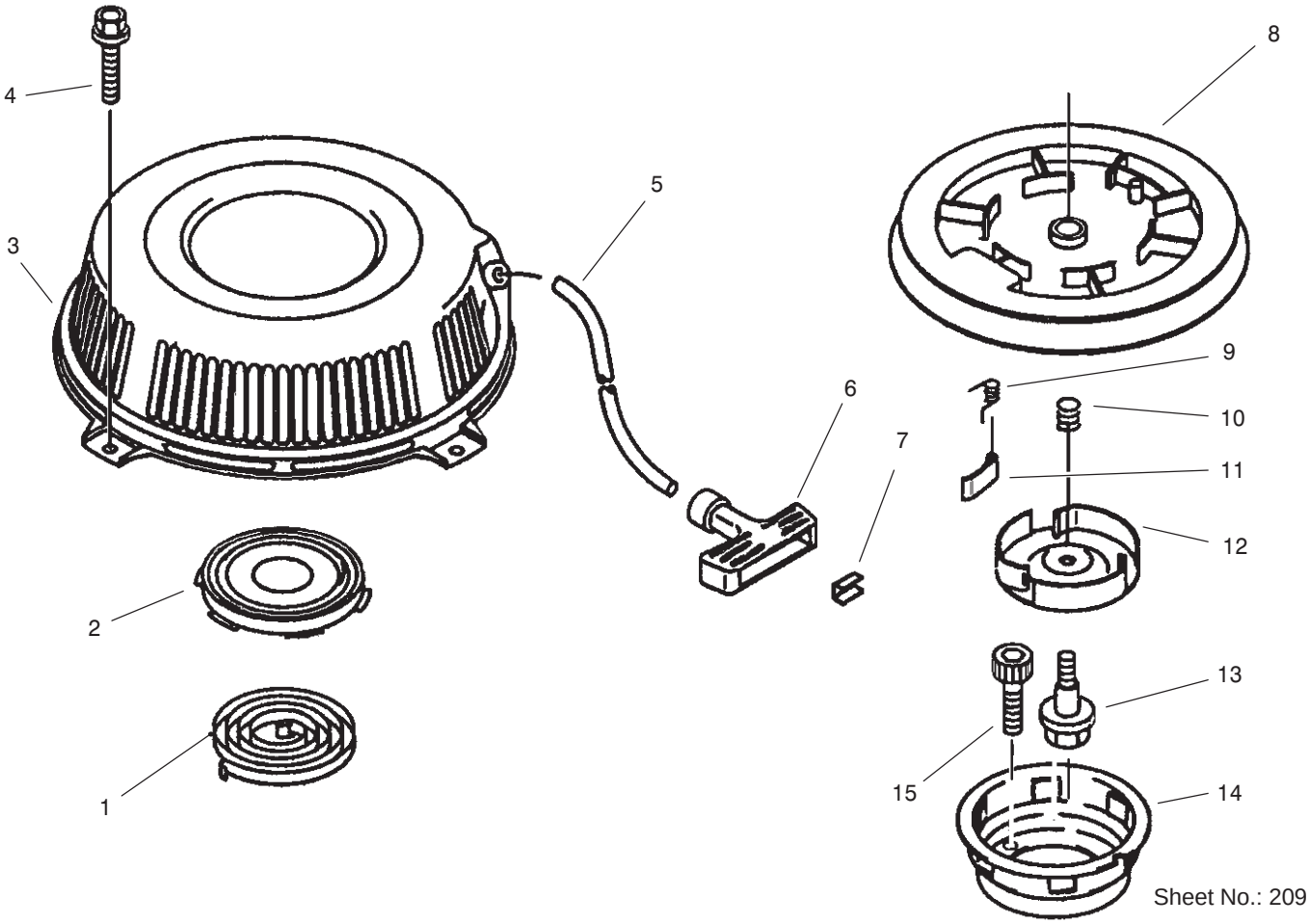

Sheet No.: 209

Starter

Ref. No.	Part No.	Qty.	Description
1	90281–2267	1	Spring–Recoil
2	32099–2060	1	Case–Spring
3	32099–2239–yk	1	Case–Recoil Starter
4	130b0610	4	Bolt–Flange
5	59106–2060	1	Rope–Starter
6	46075–2059	1	Grip–Starter Rope
7	92022–2248	1	Washer
8	59101–2054	1	Reel–Recoil Starter
9	92081–2021	3	Spring
10	92081–2268	1	Spring–Return
11	13165–2073	3	Pawl–Recoil Starter
12	14020–2054	1	Retainer–Recoil
13	92001–2027	1	Bolt
14	49080–2144	1	Pulley–Starting
15	120p0620	3	Bolt–Socket
16	49088–2412–yk	1	Starter Incl #1–5 8–14

Ref. No.	Part No.	Qty.	Description

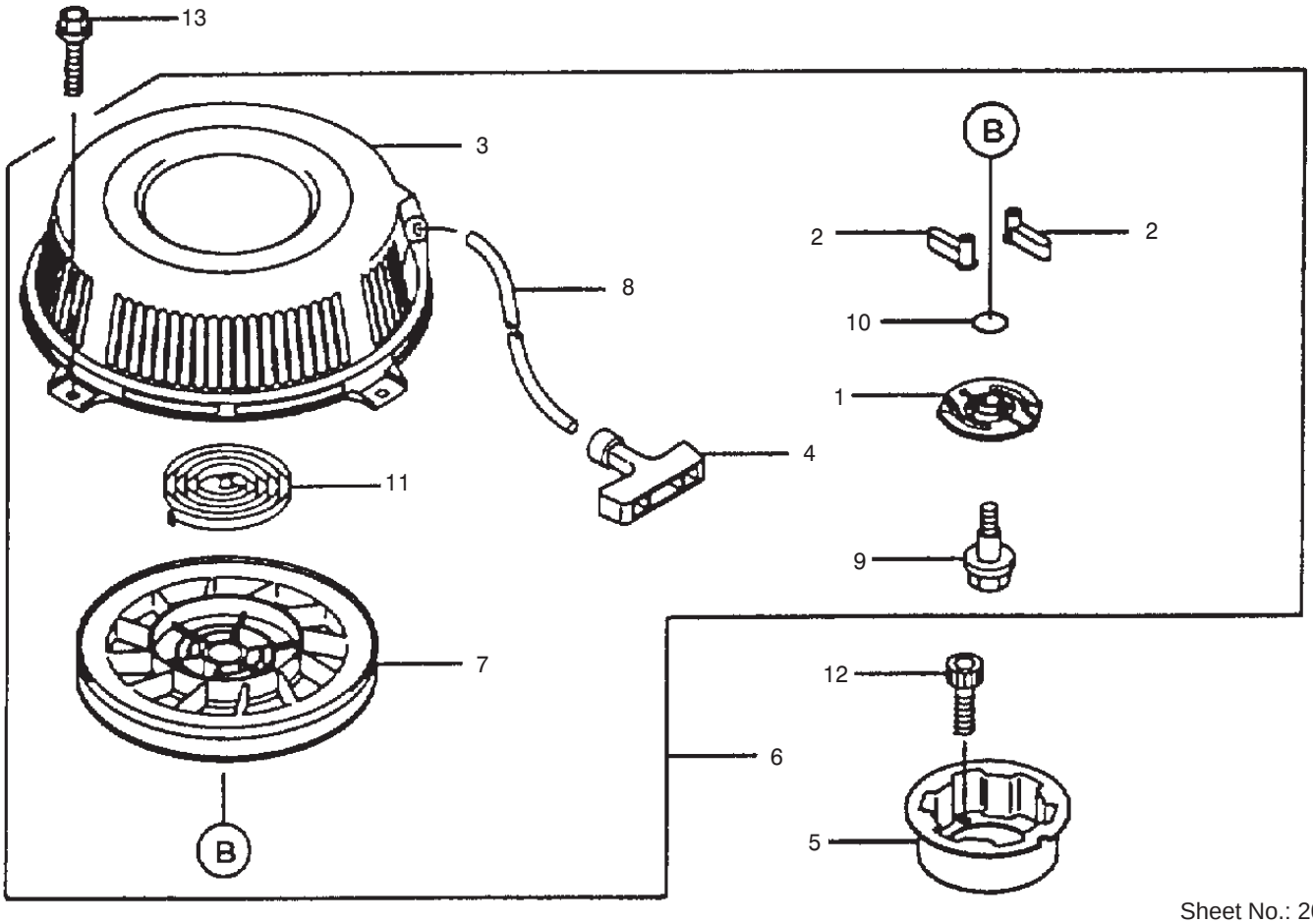

Sheet No.: 209

Starter

Ref. No.	Part No.	Qty.	Description
1	10370–2102	1	Guide
2	13165–2092	2	Pawl–Recoil Starter
3	32099–2308–9H	1	Case–Spring
4	46075–2106	1	Grip–Recoil Starter
5	49080–2176	1	Pulley–Starting
6	49088–2473–9H	1	Starter–Recoil
7	59101–2103	1	Reel–Recoil Starter
8	59106–2082	1	Rope
9	92009–2382	1	Screw
10	92033–2175	1	Ring–Snap
11	92144–2399	1	Spring
12	120P0620	3	Bolt–Socket
13	130B0610	4	Bolt–Flanged

Ref. No.	Part No.	Qty.	Description

* Order Parts from Kawasaki

3323–692

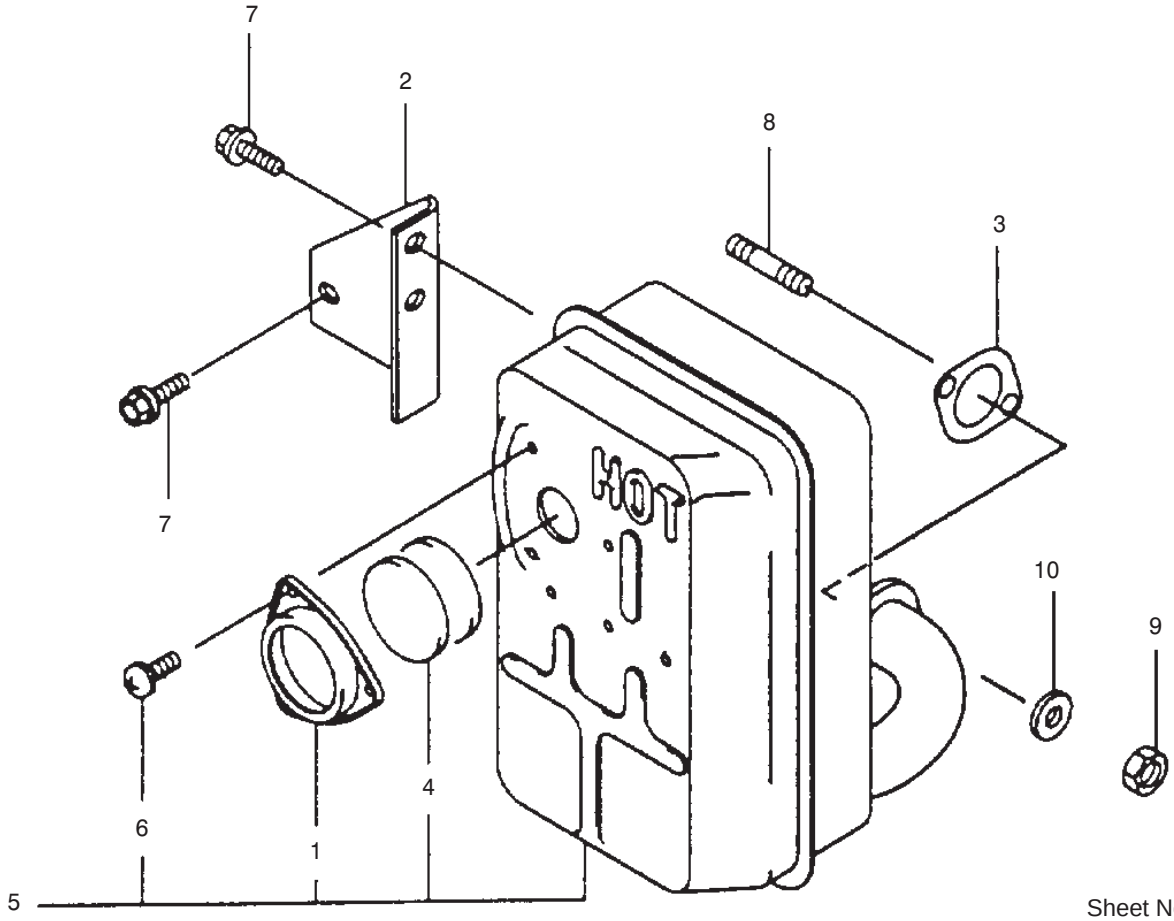

Sheet No.: 211

Muffler

Ref. No.	Part No.	Qty.	Description
1	11012–2251–9Y	1	Cap–Spark Arrester
2	11046–2163–9Y	1	Bracket
3	11060–2379	1	Gasket
4	18077–2052	2	Arrester–Spark
5	49069–2210–9Y	1	Muffler Assembly
6	92009–2166	3	Screw
7	130G0812	4	Bolt–Flanged
8	171G0818	2	Bolt–Stud
9	317R0800	2	Nut–Hex Small
10	461F0800	2	Washer–Spring

Ref. No.	Part No.	Qty.	Description

PEERLESS TRANSMISSION MODEL 700 – 070A

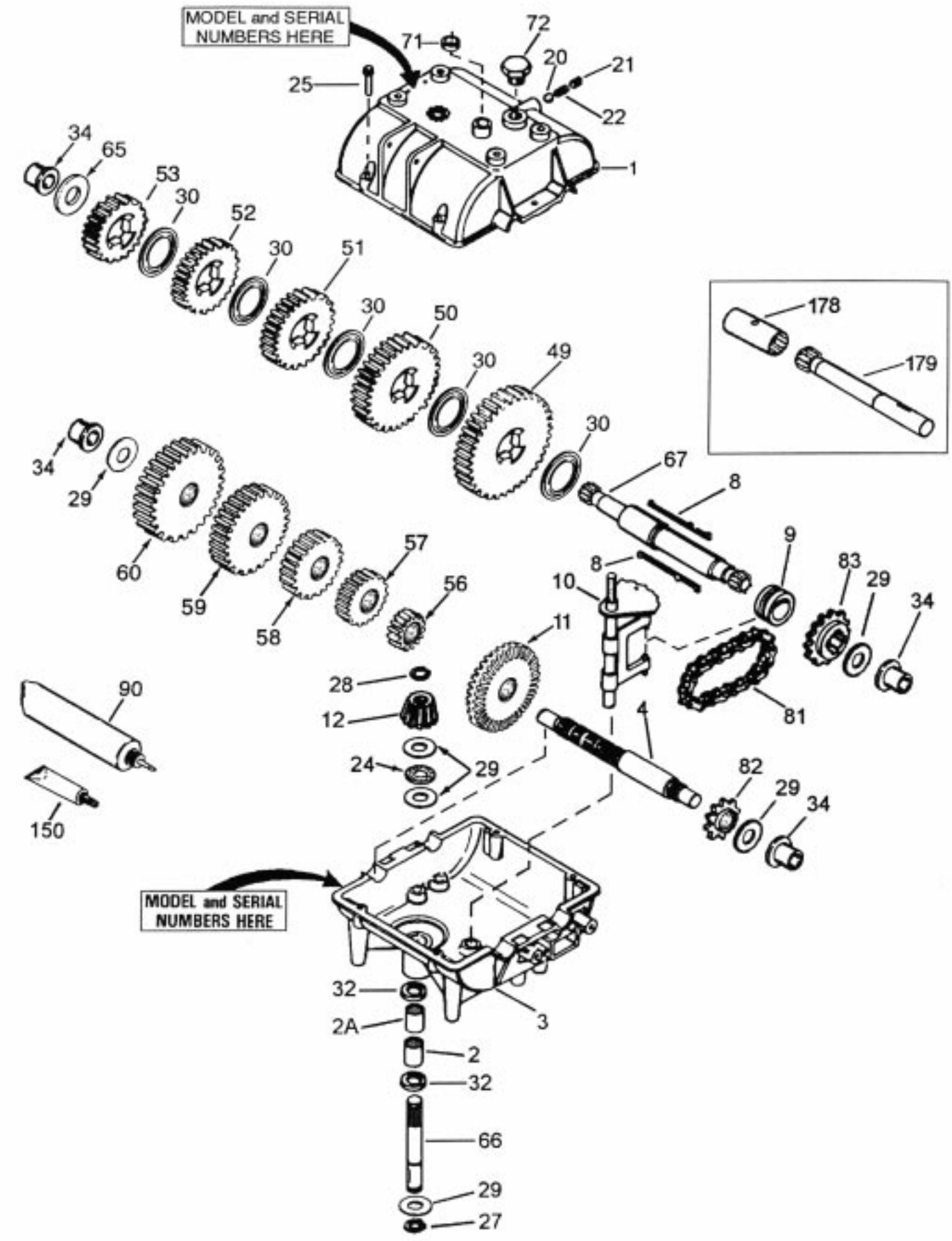

PEERLESS TRANSMISSION MODEL 700–070A

Ref. No.	Part No.	Description	No. Used
1	772083A	Transmission Cover	1
2	780086A	Needle Bearing	1
2A	780142	Needle Bearing	1
3	770061A	Transmission Case	1
4	776134	Countershaft	1
8	792089A	Shift Key	4
9	784266	Shift Collar	1
10	784376	Shift Rod & Fork	1
11	778154	Bevel Gear (42 Teeth)	1
12	778176	Bevel Pinion (14 Teeth– Steel)	1
20	792077A	Ball 5/16” Dia.	1
21	792078	Set Screw	1
22	792079	Spring	1
24	780071	Thrust Bearing	1
25	792073A	Screw	6
27	792035	Retaining Ring	1
28	788040	Retaining Ring	1
29	780072	Washer	6
30	780108	Washer	5
32	792001	O–Ring	2
34	780105A	Flanged Bushing	4
49	778146A	Spur Gear (37 Teeth)	1
50	778125	Spur Gear (35 Teeth)	1
51	778239A	Spur Gear (32 Teeth–Steel)	1
52	778124A	Spur Gear (30 Teeth)	1
53	778123A	Spur Gear (25 Teeth)	1
56	778145	Spur Gear (12 Teeth–Steel)	1
57	778151	Spur Gear (15 Teeth)	1
58	778240	Spur Gear (18 Teeth–Steel)	1
59	778126A	Spur Gear (20 Teeth)	1
60	778127A	Spur Gear (25 Teeth)	1
65	780139	Washer	1
66	776135	Input Shaft (3–11/16” long)	1
67	776402	Shifter & Brake Shaft	1
71	788069	Square Cut Ring	1
72	792074	Threaded Plug	1
81	786081	Roller Chain (No. 41 Chain, 24 Links)	1
82	786082	Sprocket (9 Teeth)	1
83	786083	Sprocket (18 Teeth)	1
90	788067B	Grease (32 oz. Bottle Bentonite Grease)	1
150	510334	Gasket Eliminator (Loctite #515)	1
178	786176	Coupling (Optional)	1
179	776401	Connector Shaft (Optional)	1

Maintenance Record

Date								

Maintenance Record

Date								

TORO®