FORM NO. 3323–720

TORO®

MODEL NO. 07271

INSTALLATION INSTRUCTIONS

2/3 AREA BED ADAPTER KIT
For Industrial Workman

⚠ CAUTION

Before servicing or making adjustments to the vehicle, stop engine and remove key from ignition switch.

Mount Bed

1. Assemble and mount 2/3 bed to rear of vehicle frame as instructed in bed installation instructions.

Mount Lift Handles

1. Mount a lift handle to each side of bed with (2) flange nuts (Fig.1).

Note: On older beds, front right handle mounting hole may not be drilled in bed. Use dimensions shown in figure 2, locate, mark and drill a .406" hole. Hole is centered up and down.

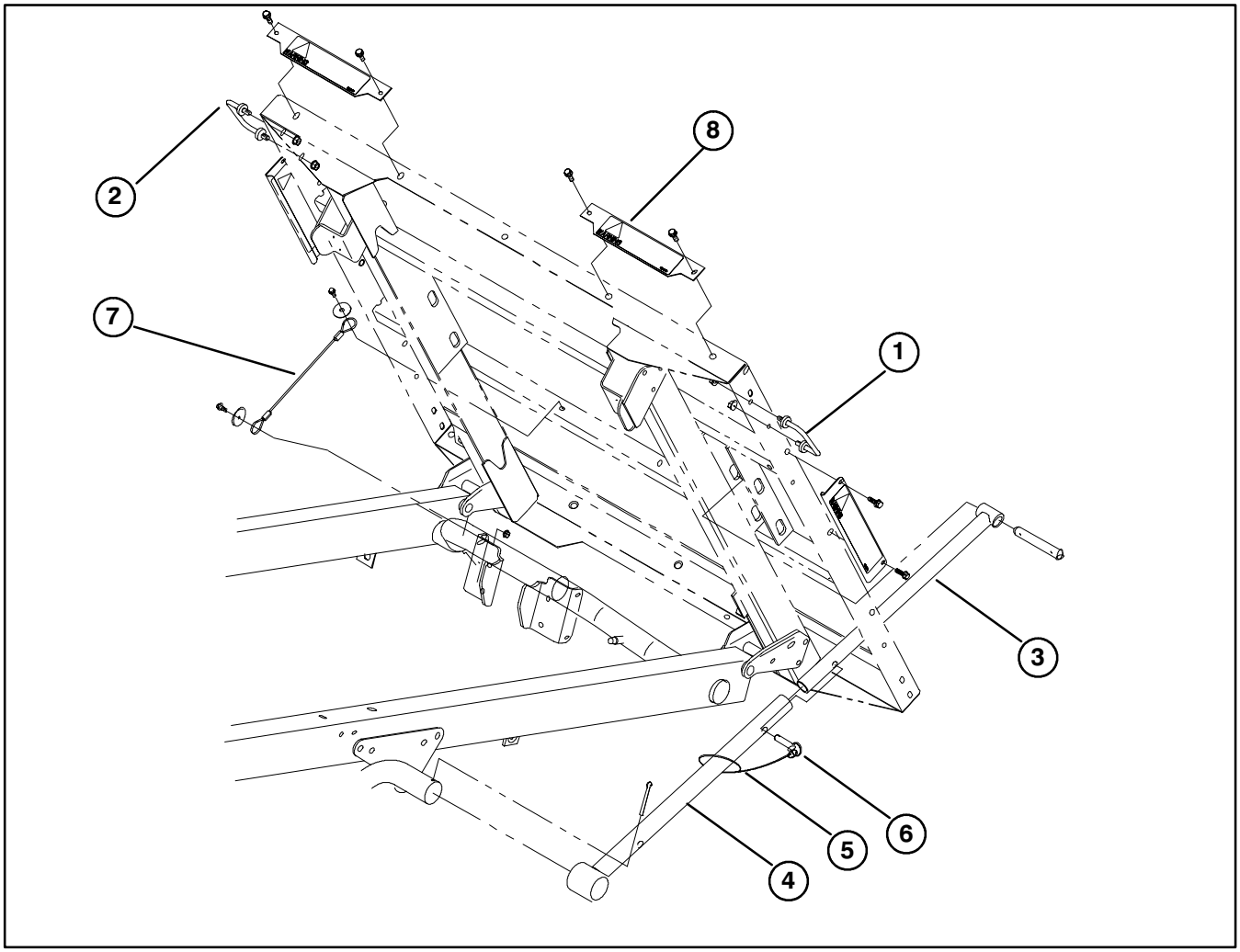

Figure 1

1. L.H. Lift handle
2. R.H. Lift handle
3. Inner prop rod
4. Outer prop rod
5. Lanyard
6. Hitch pin
7. Lift cable
8. Front plate
9. Side plate

© The TORO Company – 2000

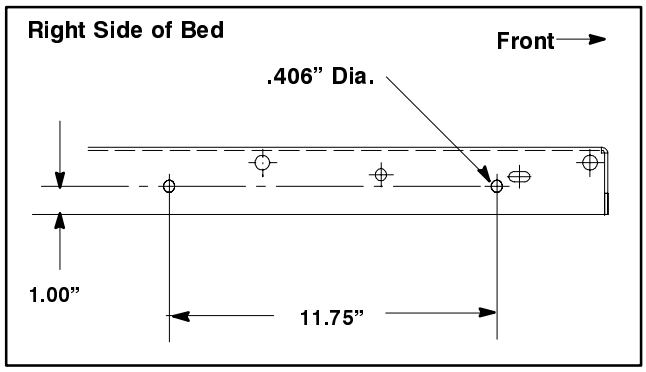

Figure 2

Mount Prop Rods

1. Raise bed and secure it with a hoist or block it to prevent it from accidentally falling.

2. Secure end of inner prop rod to front slots in bed mounting plates with clevis pin and lynch pin (include w/bed). Insert clevis pin from outside of bed with lynch pin toward outside (Fig. 3).

Note: Unused slot can be plugged with a capscrew and nut to prevent assembly errors.

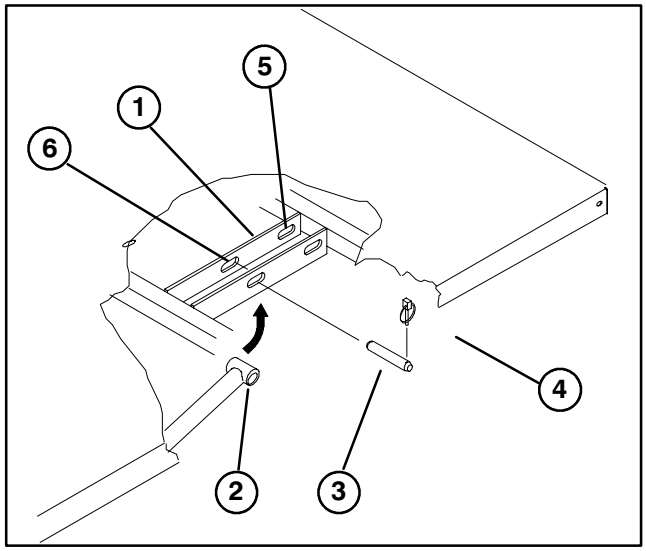

Figure 3

1. Bed mounting plate
2. Inner prop rod
3. Clevis pin
4. Lynch pin
5. Rear slots
6. Front slots

3. Install lynch pins to inside ends of clevis pins.

4. Insert outer prop rod over end of inner prop rod.

5. Secure a lanyard to hitch pin, then lash lanyard onto outer prop rod (Fig.1).

6. Slide end of outer prop rod onto engine mounting tube and secure with a cotter pin (Fig.1).

Mount Cable Lift

1. Mount end of lanyard to bed rib with a shoulder bolt and flat washer (Fig. 1).

Note: On older beds, lanyard mounting hole and nut insert may not be in bed rib. Use dimensions shown in figure to locate, mark and drill a .391" hole. Install a .250–20 insert in hole.

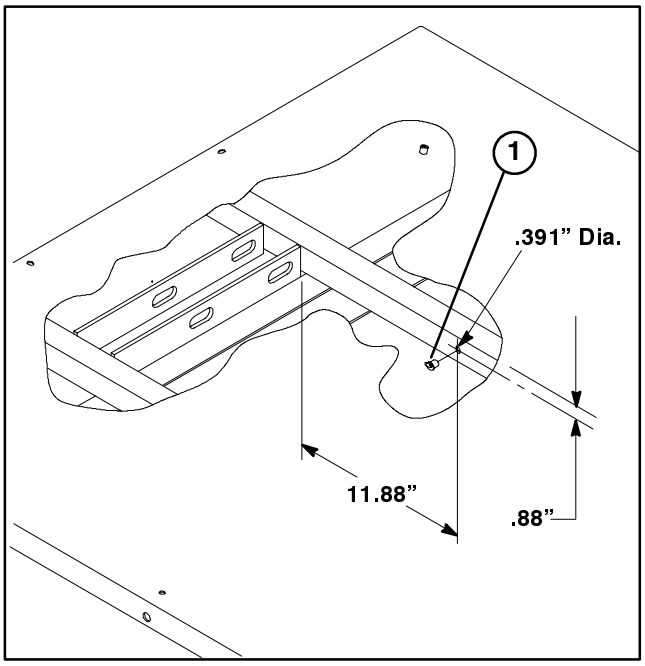

Figure 4

1. Nut insert

2. Mount other end of lanyard to vehicle tube bracket with a shoulder bolt, flat washer and flange nut (Fig. 1).

Mount Decal Plates

1. Mount (2) front decal plates to front of bed with flange head capscrews. Position as shown in figure 1.

2. Mount a side decal plate to each side of bed with flange head capscrews. Position as shown in figure 1.

IMPORTANT: The 1/3 mid–area must be covered when the 2/3 bed is used on the Workman. This can be done by installing 1/3 bed, 1/3 tool box or 1/3 cover.