1969

TORO

MODEL NOS. 19250 - 900001 & UP
19251 - 900001 & UP

PARTS CATALOG

21" WHIRLWIND H.P. KEY-LECTRIC

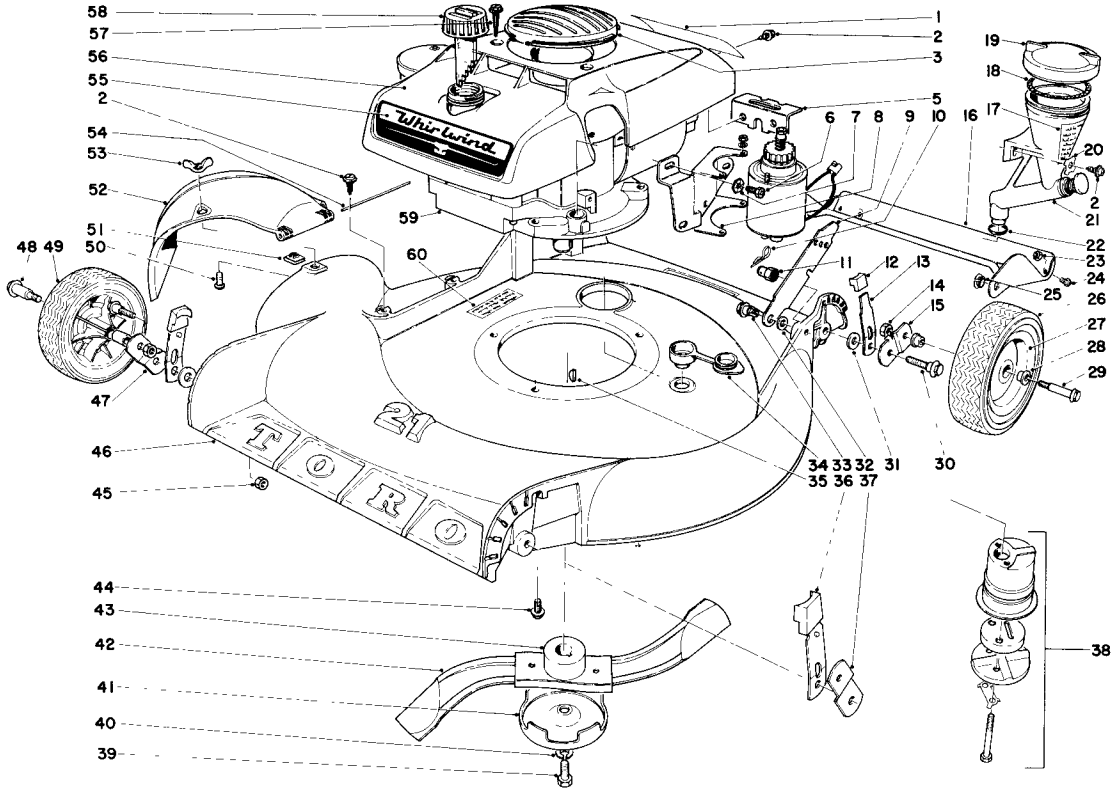

Ref. No.	Part No.	Description	No. Used
1	5-3335	Decal, Maintenance	1
2	32104-75	Screw, Self Tapping	5
3	5-3516	Insert, Shroud	1
5	5-3307	Bracket, Rear Shroud	1
6	321-2	Screw	3
7	3290-257	Lockwasher	3
8	5-3517	Bracket, Starter Motor	1
9	5-2446	Handle, Latch	2
10	3290-255	Hair Pin Cotter	2
11	3-6482	Pivot Nut, Handle	2
12	5-0656	Knob, Arm	2
13	5-3357	Spring Arm Assembly	4

Ref. No.	Part No.	Description	No. Used
14	32146-12	Nut, Lock	4
15	5-4471	Arm, Pivot	1
16	5-4662	Shield, Rear Safety	1
17	5-2947	Decal, Oil Reservoir	1
18	5-1391	"O" Ring	1
19	3-8429	Cap, Reservoir (Incl. Ref. 18)	1
20	3290-261	Washer, Pyramidal	2
21	5-0625	Reservoir, Oil	1
22	237-65	"O" Ring	1
23	3218-1	Nut, Jam	2
24	3258-159	Screw, Nylon	2
25	256-194	Nyliner	2

COPYRIGHT 1968 BY
TORO MANUFACTURING CORPORATION
MINNEAPOLIS, MINN. 55420 — U.S.A.

Price 25 cents
Rev. A

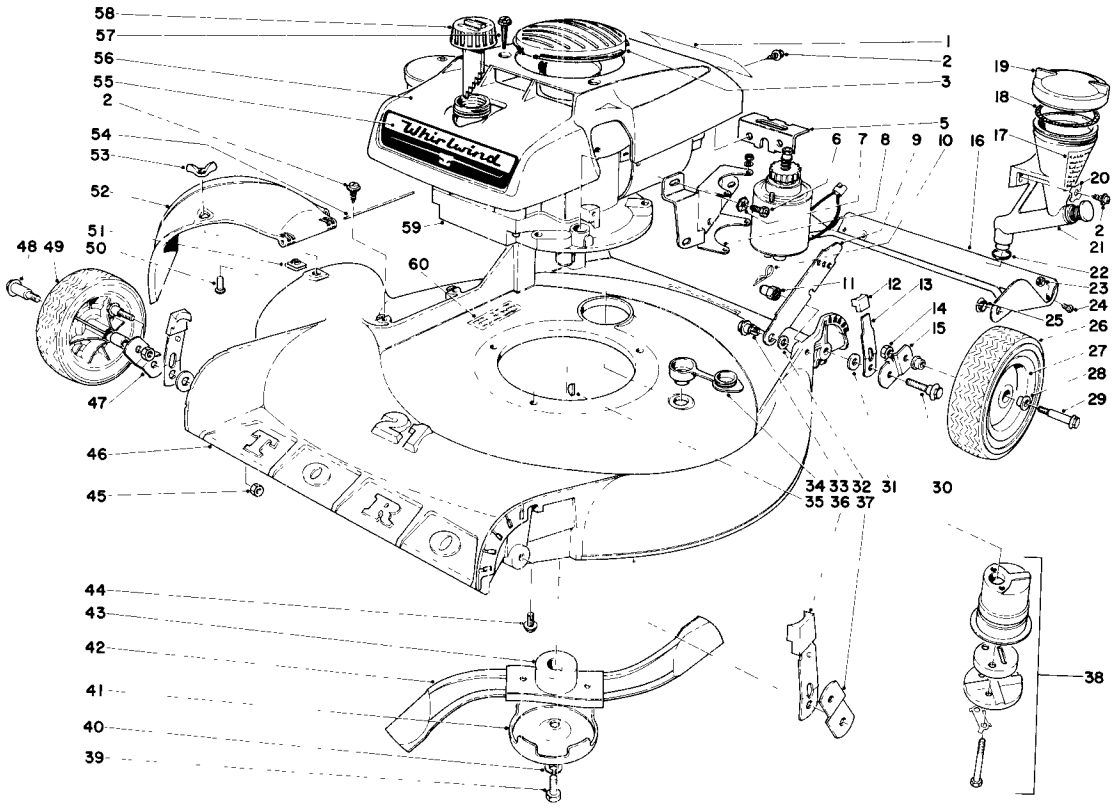

Ref. No.	Part No.	Description	No. Used
26	4-2600	Tire, 8"	2
27	3-2563	Wheel Assy. (Incl. Ref. 28)	4
28	3-2664	Bushing	4
29	5-4503	Bolt, Wheel	2
30	5-3351	Screw, Pivot	4
31	5-4460	Washer, Pivot	4
32	3-3287	Spacer, Handle Latch	2
33	5-2490	Screw, Shoulder	2
34	5-0655	Plug, Washout	1
35	3257-3	Key	1
36	5-0657	Knob, Arm	2
37	5-4473	Arm, Pivot	1
38	2-9319	Muffler Assembly	1
39	3-5246	Screw, Special	1
40	3253-22	Lockwasher	1
41	5-4475	Cup, Anti-scalp	1
42	5-1610	Blade	1
43	3-9810	Retainer, Blade	1
44	32140-48	Screw, Sems	3

Ref. No.	Part No.	Description	No. Used
45	32146-5	Nut, Lock	2
46	5-3325	Housing	1
47	5-4474	Arm, Pivot	1
48	3-2652	Bolt, Wheel	2
49	5-0660	Tire	2
50	3290-133	Screw	1
51	3290-199	Nut, Special	1
52	5-3311	Deflector	1
53	32103-14	Nut, Wing	1
54	3-2644	Pin, Hinge	1
55	5-3304	Decal, Whirlwind	1
56	5-3327	Shroud	1
57	32104-88	Screw, Self Tapping	2
58	5-3460	Gas Cap Assembly	1
59	221-310	Engine	1
60	3-7643	Decal, Warning	1
*	4-2089	Loose Parts Kit	1
*	5-3556	Rope, Starter	1
*	5-4472	Arm, Pivot - Right Rear	1

* Not Illustrated

SPECIFICATIONS

ENGINE: 21" Elec. Start H. P., Toro LAV35-40457H.

ENGINE SHROUD: Rigid Polyethylene

FUEL TANK CAPACITY: 1 quart

CUTTER BLADE: 21" long, "S" shaped, heat treated.

WHEELS: Polyethylene with sintered metal bushings.

TIRES: Front - semi-pneumatic 6.75 x 1.75 Toro tread. Rear - semi-pneumatic 8 x 1.75 Toro tread.

HEIGHT OF CUT: 1/2" to 3" by moving wheels, with hand operated levers.

WIDTH OF CUT: 21"

HOUSING: Die cast aluminum alloy, spiral grass chamber, right hand discharge. Symmetrical wheel locations. Hinged chute deflector.

FOLDING HANDLE: 3/4" O.D. x #16 ga. welded steel tubing in separable halves. No tool, positive handle height adjustment. Choice of upright or folded storage position.

THROTTLE CONTROL: Control wire and casing. Operating lever mounted to escutcheon plate on upper handle. Stop, run, and choke positions.

DIMENSIONS:
Width: 24 1/2"
Length: 30 1/2" w/o handle, wheels at 1" cut.
Height: 13 1/4"

WEIGHT: 54 pounds

STANDARD EQUIPMENT:
Grass bag assembly, bagging chute, bag hanger, anti-scalp cup, washout port, "Auto-oiler" † visual oil filler, battery Pow-R-Pack, starter, battery charger, gas gauge (Prismatic), rear safety shield.

†Exclusive mark of Toro Manufacturing Corporation.

CARBURETOR ADJUSTMENTS

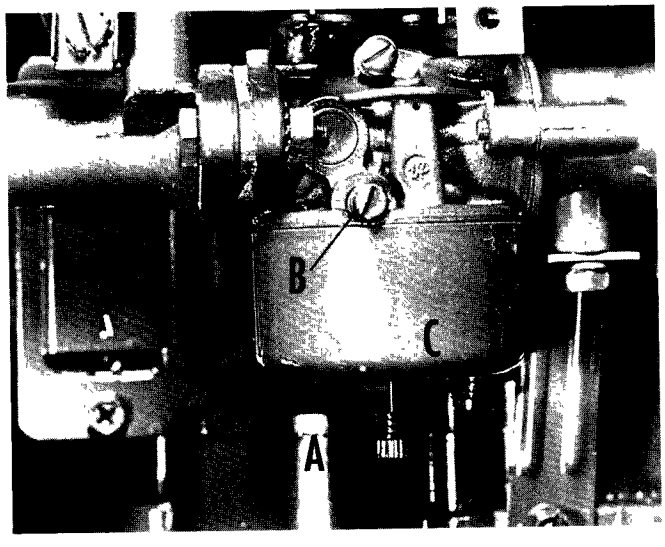

Do not make unnecessary adjustments. Factory settings are correct for most applications. If adjustments are needed, proceed as follows. CAUTION: Do not force-tighten needle - permanent damage may result.

1. Close power adjusting needle "A" by turning to right (clockwise). Close finger tight only. Forcing will cause damage.
2. Open "A" one turn (counterclockwise).
3. Close idle adjusting needle "B" by turning to right (clockwise). Close finger tight only. Forcing will cause damage.
4. Open "B" five eighths (5/8) turn counterclockwise.
5. Start engine. Follow starting instructions. (See Owner's Manual).
6. With throttle open (carburetor control at "RUN" or "FAST" position), adjust power adjusting needle "A" one-eighth (1/8) turn at a time, forward or backward until engine runs smoothly. If engine tends to stall under load, enrich mixture slightly (counterclockwise).
7. Hold throttle lever closed or move carburetor control to "IDLE" or "SLOW" position and adjust idle adjusting needle "B" until engine runs smoothly, proceeding as in step 6.
8. Allow several seconds between each adjustment when performing either step 6 or 7 to allow engine to react to new setting.
9. Maximum engine speeds are preset at factory and should not be changed except by a qualified Toro repairman who has the necessary equipment.

STORAGE INSTRUCTIONS

In event engine is to be stored for any length of time (30 days or more) or at the end of mowing season, prepare as follows:

1. Drain by tipping or by syphon hose, then run engine until remainder is used and tank and carburetor are empty.
   CAUTION: Drain into container outdoors away from fire or flame.
2. Drain carburetor. Float bowl carburetors are drained by pressing upward on "C".
3. Inside protection of engine for storage is performed by removing spark plug and pouring one ounce of S. A. E. 30 oil through spark plug hole into cylinder. Crank engine without starting several times to spread oil over cylinder walls. Replace spark plug.

BATTERY CHARGING

If the battery has been exhausted by extensive use without charging, at least 48 hours is needed to restore full charge.

Use your TORO charger to replace energy removed from the battery POW-R-PACK. For continued peak performance and long life the battery should be charged for 24 hours after each cutting. However, for convenience, the battery can be left on continuous charge when the mower is not in use.

To charge, proceed as follows:

1. Disconnect the connector from the receptacle on the battery POW-R-PACK.
2. The battery POW-R-PACK may be left on the mower when charging; or it may be removed for charging at a more convenient location. Flex the mounting tabs slightly and the container will pivot down and off from the mower.
3. Insert the charger connector into the receptacle on the battery POW-R-PACK.
4. Insert the charger into a 115 VAC, single phase, 60 cycle outlet.
5. The battery is now on charge and will remain so until the charger is removed.

NOTE: Use only the Toro battery charger supplied with your mower. Any other brand of charger may permanently damage the battery POW-R-PACK.

OFF SEASON STORAGE

If the battery POW-R-PACK has not been used for an extended period of time (Winter storage, brand new in the carton, etc.), you should charge it for 48 hours or more to restore full charge.

During the off season storage your battery POW-R-PACK may be left on the mower or removed and stored in a separate location. It is recommended that the battery POW-R-PACK be stored in a cool dry area during off season storage.

DO NOT leave the battery POW-R-PACK on charge throughout a Winter storage period; this will shorten the useful life of the battery POW-R-PACK. During this time of idleness, the battery will lose some or all of its charge and may not be able to start the mower the following Spring. Therefore, you will want to charge it for a minimum of 48 hours, at the start of the season, to restore full charge.

DISCARDING OLD BATTERIES:
If you need to purchase a new battery POW-R-PACK, go to your Local TORO Service Dealer. He will have the proper battery to fit your mower.

DO NOT DISPOSE OF THE OLD BATTERY IN FIRE AS IT MAY EXPLODE.

ATTENTION: INOPERATIVE STARTER

Should starter gears not engage and prevent engine from rotating, disconnect spark plug wire and remove shroud insert. Turn the cup on the engine COUNTERCLOCKWISE until the gears break free. Replace shroud insert and reconnect spark plug wire. Your mower is now ready to operate.

MOUNTING THE STARTER MOTOR

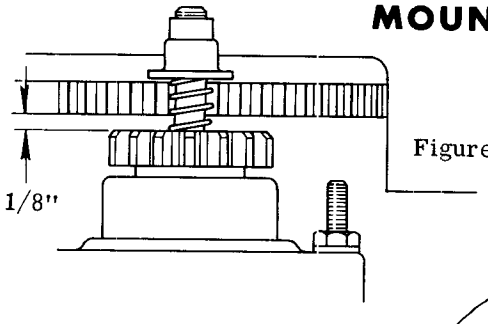

Figure 1

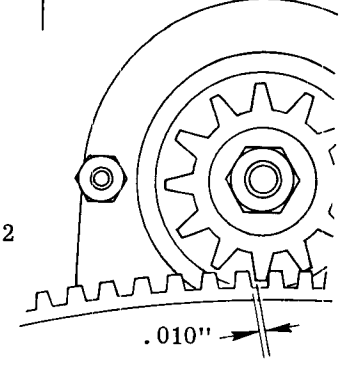

Figure 2

Although mounting the starter motor to the engine is not particularly difficult, we would like to recommend the following instructions:

1. Starter motor should be as near vertical as possible.
2. With Bendix gear disengaged, there should be at least 1/8" CLEARANCE between the upper face of the Bendix gear and the lower face of the flywheel gear. (See figure 1)
3. Rotate the flywheel until the engine is "on compression". With fingers, roll the Bendix gear up the starter shaft and engage the flywheel gear. Gear teeth "backlash", at this point, should be .010". (See figure 2)

This procedure will assure proper alignment, correct gear tooth engagement, and eliminate "binding" problems which might otherwise occur.

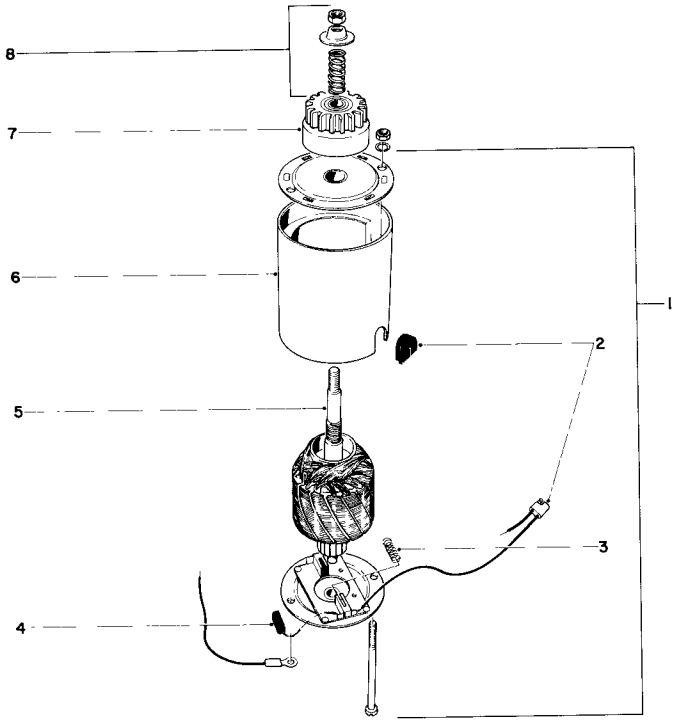

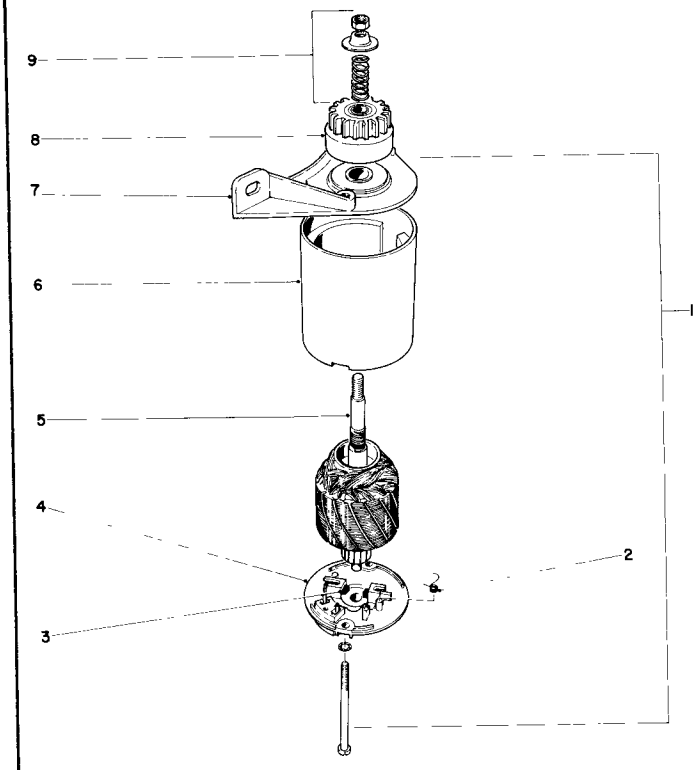

STARTER MOTOR AND PINION

APPLICABLE TO SERIAL NOS. 905473 & UP

Ref. No.	Part No.	Description	No. Used
1	218-428	Starting Motor w/o Pinion	1
2	218-429	Lead Assy. & Grommet	1
3	218-376	Spring Set - Brush	1
4	218-374	Brush Set	1
5	218-372	Armature	1
6	218-373	Frame & Pole Assy.	1
7	218-371	Starter Pinion	1
8	218-377	Cup, Nut, Spring Kit	1

Ref. No.	Part No.	Description	No. Used
1	218-431	Starting Motor w/o Pinion	1
2	218-436	Spring Set	1
3	218-435	Brush Set	1
4	218-434	Head Assy., Commutator End	1
5	218-432	Armature	1
6	218-433	Frame & Pole Assy.	1
7	218-437	Head, Drive End	1
8	218-371	Starter Pinion	1
9	218-377	Cup, Nut, Spring Kit	1

IMPORTANT: Brass colored lead on wire harness must be inserted into receptacle on starter motor with ridged "boss".

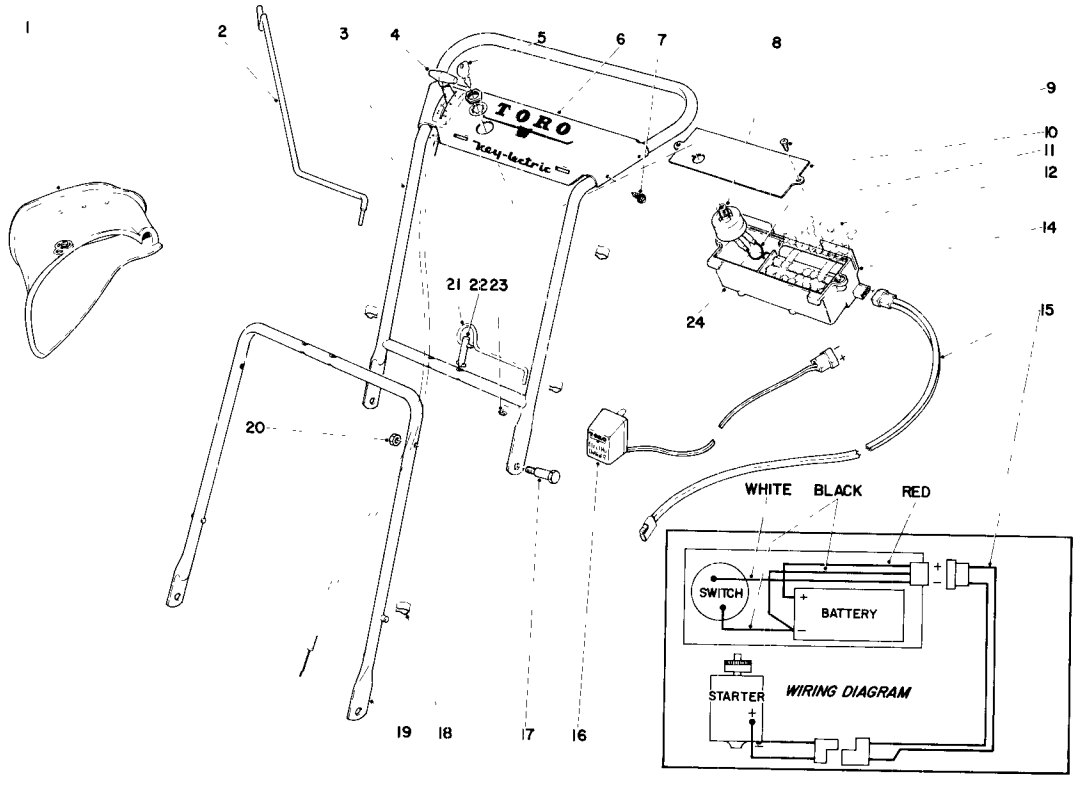

HANDLE ASSEMBLY

Ref. No.	Part No.	Description	No. Used
1	5-3442	Attachment, Bag	1
2	3-0690	Hanger	1
3	5-4450	Handle - Upper	1
4	5-3551	Control, Throttle	1
5	218-412	Key	2
6	5-4484	Plate, Escutcheon	1
7	32104-76	Screw, Self Tapping	4
8	5-4023	Switch, Starter	1
9	32104-91	Screw, Self Tapping	2
10	5-4022	Cover, Battery Pack	1
11	5-3773	Wire, Lead	1
12	5-3726	Spacer, Battery	1
14	5-3730	Container, Battery Pack	1
15	5-4556	Harness	1
*	5-4756	Harness, Wiring - Used on Serial Nos. 905473 & Up	1

Ref. No.	Part No.	Description	No. Used
16	5-3524	Charger, Battery	1
16	5-4545	Charger, Battery (Canadian)	1
17	5-4476	Bolt, Shoulder	2
18	218-75	Clip	4
19	5-4424	Handle Assembly - Lower	1
20	32146-8	Nut, Lock	2
21	5-4421	Spring, Handle Latch	1
22	5-4422	Pin, Latch	1
23	3290-299	Clip - Push On	1
24	4-4599	Battery Pack Assembly (Incl. Ref. 11-14)	1
*	81064	Bag - Set of 2	1
*	3-6279	Locking Strap, Grass Bag	1

* Not Illustrated

MAGNETO No. 610772

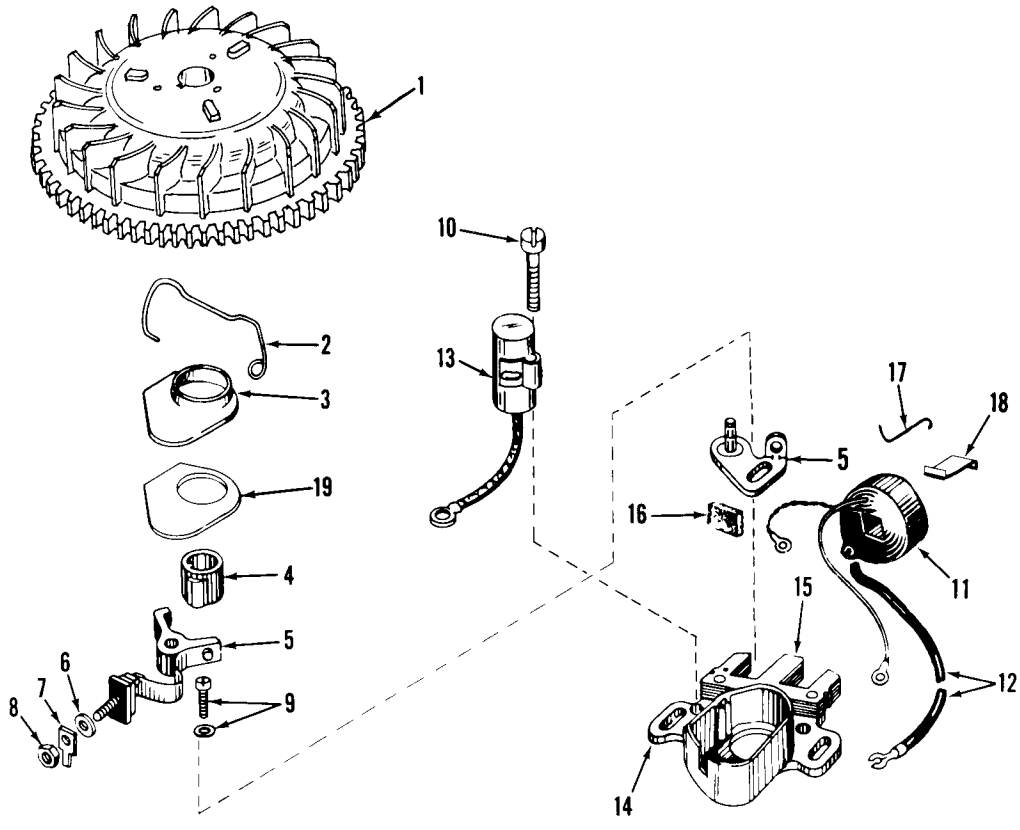

Ref. No.	Part No.	Description	No. Used
1	610757	Flywheel	1
2	30551	Spring, Breaker Box	1
3	30550	Cover, Breaker Box Dust	1
4	30552	Cam, Breaker	1
5	30547A	Contact Assy., Breaker	1
6	610385	Washer, Terminal	1
7	30843	Tab, Ground Terminal	1
8	610408	Nut, Terminal	1
9	29181	Screw & Washer, Breaker	1
10	610593	Screw, Condenser Fastening	1
11	30560	Coil Assy. (Incl. Ref. 12, 13 & 18)	1

Ref. No.	Part No.	Description	No. Used
12	30554	Wire, Lead	1
13	30548A	Condenser	1
14	30545	Core & Plate	1
15	30561A	Stator Assy. (Incl. Ref. 2, 3, 5 thru 14 & 16 thru 19)	1
16	30549	Felt, Cam Wiper	1
17	31311	Clip, Coil Locking	1
18	29629	Spring, Coil Wedge	1
19	32052	Gasket, Dust Cover	1

ENGINE MODEL LAV35-40457H

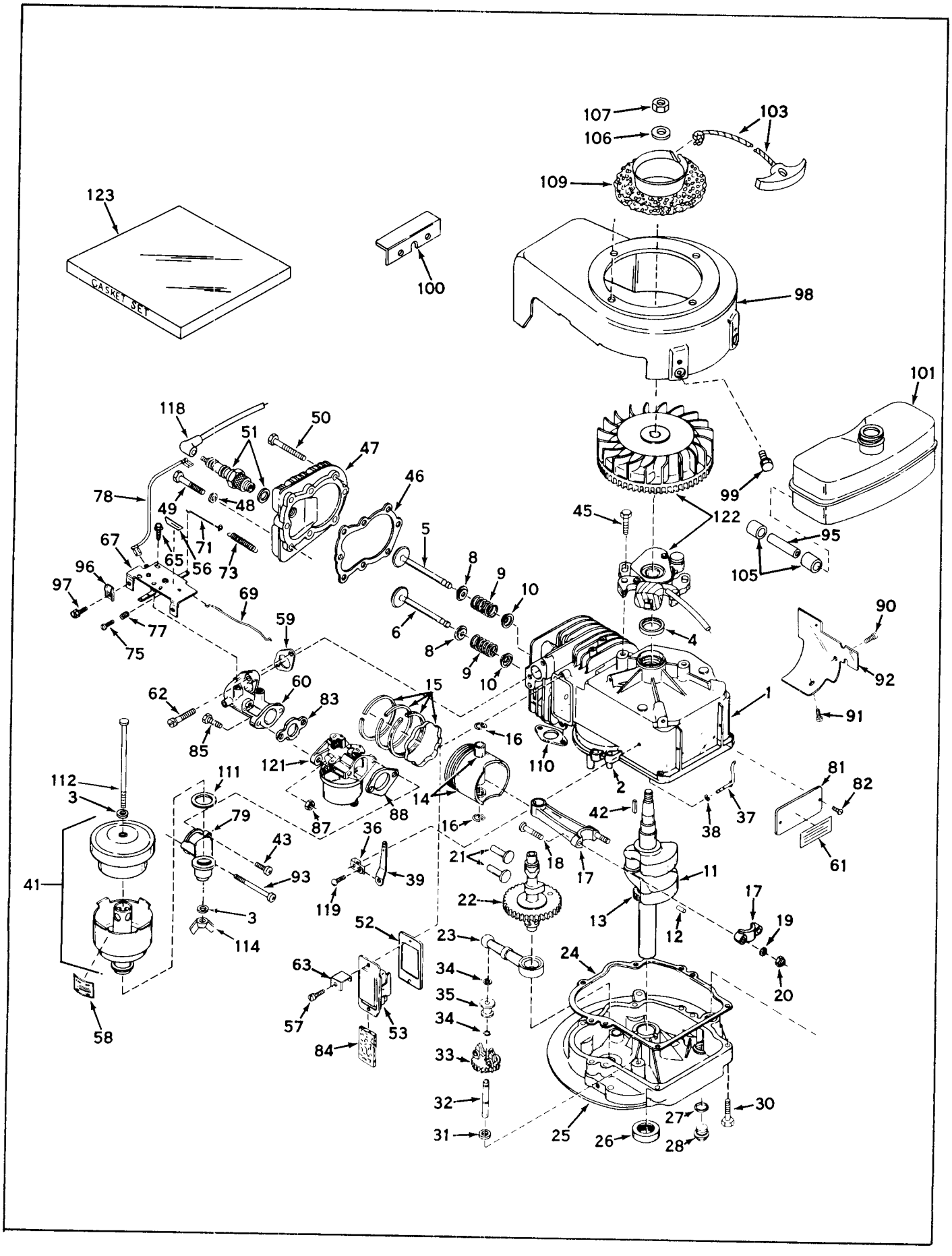

Ref. No.	Part No.	Description	No. Used
1	32616	Cylinder Assy. (Incl. Ref. 2 & 4)	1
2	26727	Pin, Dowel	2
3	27183	Washer, Fiber	2
4	*29183	Seal, Oil	1
5	29314A	Valve, Intake (Standard) (Incl. Ref. 8, 9 & 10)	1
5	29316A	Valve, Intake (1/32" overs.) (Incl. Ref. 8, 9 & 10)	1
6	29313A	Valve, Exhaust (Standard) (Incl. Ref. 8, 9 & 10)	1
6	29315A	Valve, Exhaust (1/32" overs.) (Incl. Ref. 8, 9 & 10)	1
8	31671	Cap, Upper Valve Spring	2
9	31672	Spring, Valve	2
10	31673	Cap, Lower Valve Spring	2
11	30961	Crankshaft (Incl. Ref. 12 & 13)	1
12	29783	Pin, Crankshaft Gear	1
13	27613	Gear, Crankshaft	1
14	31307	Piston & Pin Assy. (Incl. 2 of No. 16) (Standard)	1
14	31308	Piston & Pin Assy. (Incl. 2 of No. 16) (.010 oversize)	1
14	31309	Piston & Pin Assy. (Incl. 2 of No. 16) (.020 oversize)	1
15	28986	Ring Set, Piston (Standard)	1
15	28987	Ring Set, Piston (.010 overs.)	1
15	28988	Ring Set, Piston (.020 overs.)	1
16	20381	Ring, Piston Pin Retaining	2
17	30963B	Rod Assy., Connecting (Incl. Ref. 18, 19 & 20)	1
18	26706	Bolt, Connecting Rod	2
19	20747	Washer, Connecting Rod	2
20	27573	Nut, Lock	2
21	27241	Lifter, Valve	2
22	32260	Camshaft	1
23	29914	Pump Assy., Oil	1
24	*26750A	Gasket, Mounting Flange	1
25	31907	Flange Assy., Mounting (Incl. Ref. 26, 27, 28 & 32)	1
26	*26208	Seal, Oil	1
27	*28833	Gasket, Drain Plug	1
28	27244	Plug, Oil Drain	1
30	650488	Screw, Hex Hd. Cap, Sems	6
31	30590A	Washer, Flat	1
32	30574	Shaft, Mechanical Governor	1
33	30591	Gear Assy., Governor	1
34	29193	Ring, Retaining	2
35	30588A	Spool, Governor	1
36	31335	Clamp, Governor Lever	1
37	30589	Rod, Governor (Incl. Ref. 38)	1
38	28277	Washer, Flat	1
39	31383	Lever, Governor	1
41	31404	Cleaner Assy., Air	1
42	27247	Key, Flywheel	1
43	28597	Screw, Fil. Hd. Sems	1
45	650489	Screw, Hex Hd. Cap, Sems	2
46	*29953B	Gasket, Cylinder Head	1
47	30579	Head, Cylinder	1
48	26073	Washer	5
49	6021	Screw, Hex Hd. Cap	5
50	6023	Screw, Hex Hd. Cap	3
51	21943	Plug, Spark (Champion J-8 or equivalent)	1
52	*31619	Gasket, Breather	1
53	31337	Breather Assy. (Incl. Ref. 52 & 84)	1
56	31495	Decal, Speed Control	1
57	650128	Screw, Phil. Fil. Hd. Sems	2
58	30002	Decal, Air Cleaner	1
59	*30188	Gasket, Intake Pipe	1
60	31384	Pipe, Intake	1
61	31865	Decal, Name & Instruction	1
62	650176	Screw, Phil. Fil. Hd. Sems	2
63	30593	Clip, Magneto Wire	1
65	30200	Screw, Hex Sltd. Hd. Sems, Self Tapping	2
67	31736	Control Assy., Speed	1
69	31385A	Link, Throttle to Governor	1
71	31387A	Link, Governor Spring	1
73	31386	Spring, Governor	1
75	650549	Screw, Fil. Sltd. Hd. Mach.	1
77	31342	Spring, Compression	1
78	31388	Wire, Ground	1
79	31473	Elbow, Air Cleaner	1
81	31345	Plate, Identification	1
82	28670	Screw, Drive	2
83	26756	Gasket, Carburetor	1
84	31410	Element, Breather	1
85	6201	Screw, Hex Hd. Cap	2
87	29752	Nut, Hex Jam	2
88	*27272	Gasket, Cleaner Bracket	1
90	30688	Screw	1
91	650128	Screw	1
92	32407	Extension, Housing	1
93	650519	Screw, Fil. Hd. Mach.	1
95	31400	Line, Fuel	1
96	27793	Clip, Conduit	1
97	28942	Screw, Sltd. Hex Hd. Sems	1
98	32702	Housing, Blower	1
99	650561	Screw, Hex Hd. Cap, Sems2	2
100	**	Bracket, Shroud	1
101	32170	Tank, Fuel	1
103	28295	Rope Assy., Starter	1
105	29774	Line, Fuel	2
106	650490	Washer, Belleville	1
107	650607	Nut, Flywheel	1
109	30892	Pulley, Rope Start	1
110	*30081	Gasket, Muffler	1
111	*27165	Gasket, Air Cleaner to Elbow	1
112	650622	Bolt, Air Cleaner	1
114	9577	Nut, Wing	1
118	610118	Cover, Spark Plug	1
119	650548	Screw, Hex Sltd. Wshr., Hd.	1
121	631003A	Carburetor	1
122	610772	Magneto	1
123	31409B	Gasket Set (Incl. items marked *)	1

** Order from your local Toro Dealer

CARBURETOR No. 631003A

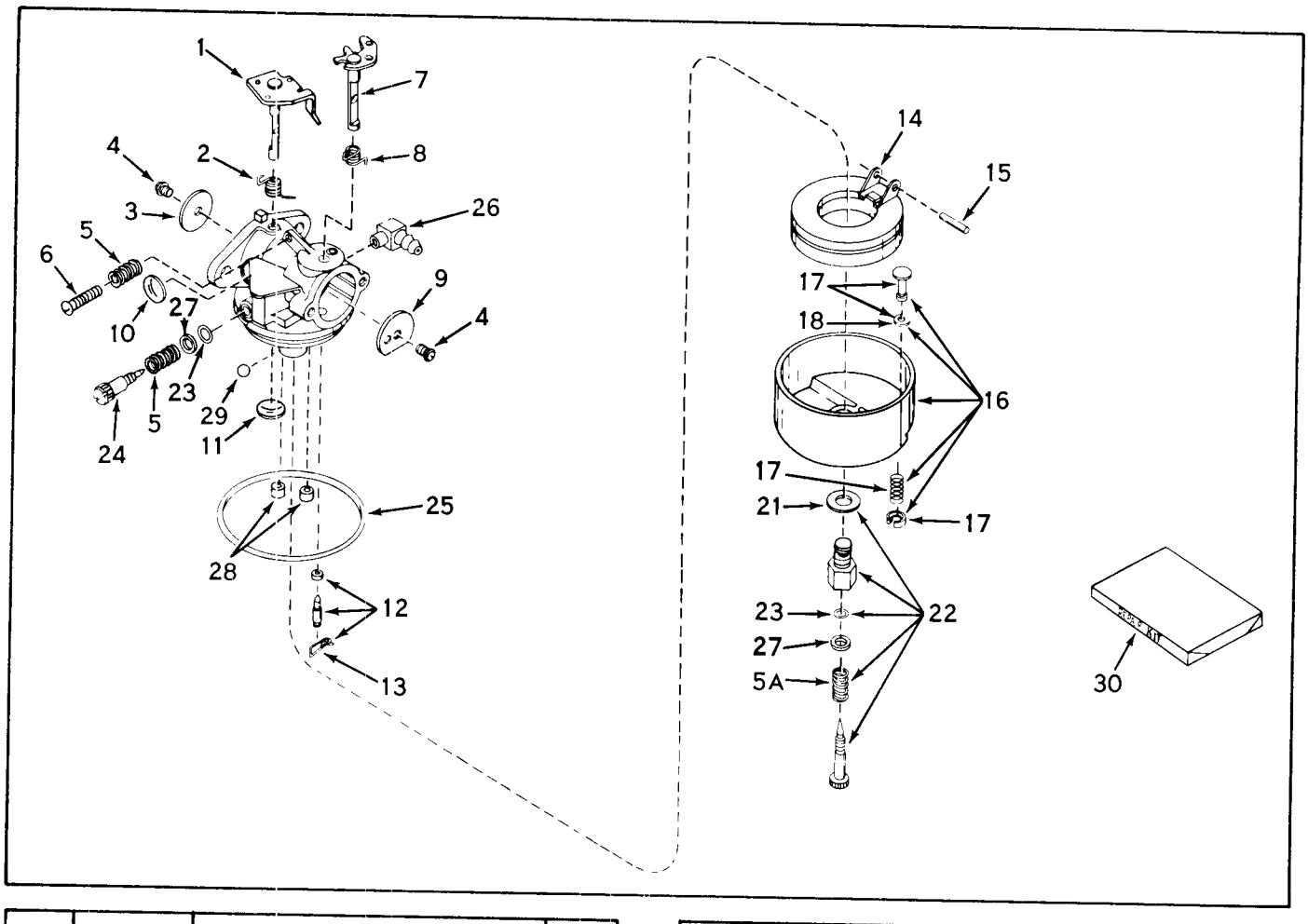

Ref. No.	Part No.	Description	No. Used
1	630983	Shaft & Lever Assy., Throttle	1
2	631066	Spring, Throttle Return	1
3	631036	Shutter, Throttle	1
4	650506	Screw	2
5	630766	Spring, Idle Regulating Screw	2
5A	630738	Spring, Main Adjustm. Screw	1
6	650417	Screw, Idle Regulating	1
7	630973	Shaft & Lever Assy., Choke	1
8	630821	Spring, Choke Return	1
9	631037	Shutter, Choke	1
10	630748	Plug, Welch	1
11	631027	Plug, Welch	1
12	*631021	Inlet Needle, Seat & Clip (Incl. Ref. 13)	1
13	631022	Clip, Inlet Needle	1
14	631023	Float, Carburetor	1
15	*631024	Shaft, Float	1

Ref. No.	Part No.	Description	No. Used
16	631025	Bowl & Drain Assy., Float (Incl. Ref. 17)	1
17	27136	Plunger Assy., Drain (Incl. Ref. 18)	1
18	27554	Gasket, Drain Plunger	1
21	27110	Gasket, Bowl-to-Body	1
22	*631026	Adjustment Screw Assy., Main (Incl. Ref. 5A, 21, 23 & 27)	1
23	*630740	"O" Ring, Adjustment Screw	2
24	*631078	Screw, Idle Adjustment	1
25	*631028	Gasket, Bowl-to-Body	1
26	631038	Fitting, Fuel Inlet	1
27	630739	Washer	2
28	630747	Plug, Cup	2
29	631081	Ball, Aluminum	1
30	631029	Repair Kit (Incl. items marked *)	1

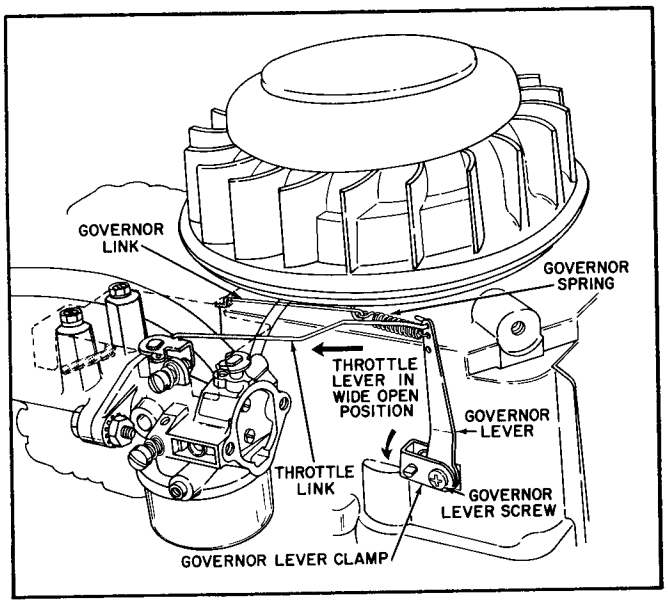

MECHANICAL GOVERNOR ADJUSTMENTS

1. Loosen governor lever screw.
2. Hold throttle lever in wide open position.
3. Rotate governor lever clamp as far as possible in direction shown by arrow.
4. Tighten governor lever screw.

IMPORTANT ORDERING INSTRUCTIONS

Repair parts are available from your TORO dealer. To insure getting correct parts without delay, furnish the following information:

1. Serial number of your mower as shown on the name plate.
2. Part number, description, and quantity of each part required.
3. State whether parts should be shipped by mail or express. All repair parts are shipped F.O.B. Factory.
4. Name and address where parts are to be shipped.
5. Do not order by reference number; use part number only.

PRODUCT CHANGES

In an effort to make improvements available to Toro owners as quickly as possible, minor changes are incorporated into Toro's products from time to time that do not become immediately shown in the Parts Catalog. If such a change apparently has been made in your unit, which is not reflected in your manual, see your Toro distributor or his authorized Toro service dealer for information and parts numbers.

MAINTENANCE RECORD

Date	Hours Used	Oil Change	Air Cleaner Service	Lubrication	Sharpen Blade	Winter Storage	Spring Service	Spark Plug Gap