Form No. 3323–755

Dingo 320–D

Compact Utility Loader

Model No. 22303—990001 and Up

Parts Catalog

Ordering Replacement Parts

To order replacement parts, please supply: the part number, the quantity, and the description of each part desired.

Understanding Reference Numbers

Each identified part in an illustration has a reference number. The reference number for a part also appears in the parts list, along with other information about the part.

This catalog uses two special reference number formats, one to indicate parts in a service assembly and another to indicate the quantity of a given part in an illustration.

Service Assembly Reference Numbers

Parts in service assemblies have reference numbers in the form **a:b.** The **a** represents the reference number of the entire service assembly and the **b** represents a sequential number unique to each part within the service assembly.

For example, a wheel assembly might be identified by reference number **6**, the tire by **6:1**, the valve by **6:2**, and the wheel by **6:3**. When you order the assembly identified by reference number 6, you receive all parts identified by reference numbers 6:1, 6:2, and 6:3. However, you may also order any part individually.

Reference numbers of this type appear in illustrations and in part lists.

Reference Numbers Indicating Quantity

In an illustration, if a reference number indicates more than one part, the reference number has the form **nX y.** The **n** represents the quantity of the part, the **X** is the multiplication symbol, and the **y** represents the reference number.

For example, in an illustration, the reference number **2X 37** means that two of the parts identified by reference number 37 are indicated.

© The TORO Company — 1999
All Rights Reserved

Contents

Description	Page
Frame and Loader Arm Assembly	3
Radiator Mount Assembly	4
Pump and Fan Mount Assembly	5
Engine Assembly	6
Fuel Tank and Air Filter Assembly	7
Hydraulic Tank Assembly	8
Hydraulic Motor Assembly	9
Hydraulic Cylinder Assembly	10
Hydraulic Cylinder No. 99–3051	11
Rear Cover Assembly	12
Electrical Components Assembly	13
Decal Assembly	14
Wheel and Motor Assembly	15
Hydraulic Motor Assembly No. 99–3052	16
Hydraulic Valve Assembly	17
Hydraulic Valve Assembly No. 99–3070	19
Hydraulic Valve Assembly No. 99–3073	20
Hydraulic Valve Assembly No. 99–3072	21
Hydraulic Valve Assembly No. 99–3077	22
Electrical Schematic	23
Hydraulic Schematic	24
Crankcase Assembly	25
Oil Pan Assembly	26
Cylinder Head Assembly	27
Gear Case Assembly	28
Head Cover Assembly	29
Dipstick and Guide Assembly	30
Main Bearing Case Assembly	31
Camshaft Assembly	32
Piston and Crankshaft Assembly	33
Flywheel Assembly	34
Fuel Camshaft Assembly	35
Engine Stop Lever Assembly	36
Injection Pump Assembly	37
Injection Pump (Complete Parts)	38
Governor Assembly	39
Speed Control Plate Assembly	40
Nozzle Holder and Glow Plugs Assembly	41
Nozzle Holder (Complete Parts)	42
Fuel Pump (Mechanical)	44
Dynamo and Pulley Assembly	45
Dynamo (Complete Parts)	46
Starter Assembly	47
Starter (Complete Parts)	48
Oil Switch and Thermoswitch Assembly	49
Water Flange and Thermostat Assembly	50
Water Pump Assembly	51
Water Pipe Assembly	52
Valve and Rocker Arm Assembly	53
Inlet Manifold Assembly	54
Exhaust Manifold Assembly	55
Gasket Kit	56

Part Description Abbreviations

Part descriptions in this catalog may include the following abbreviations.

Abbreviation	Meaning
AR	as required
ASM	assembly
CARR	carriage
DEG	degrees
FH	flat head
GA	gauge
HF	hex flange
HH	hex head
HHF	hex head flange
HLH	hex lag head
HJ	hex jam
HOC	height-of-cut
HS	hex socket
HSBH	hex socket button head
HSFH	hex socket flat head
HSH	hex socket head
HWH	hex washer head
HWHTF	hex washer head thread forming
INC	incorporated
LH	left hand
NI	nylon insert
PPH	Phillips pan head
PTH	Phillips truss head
PTO	power take off
RH	right hand
SFH	slotted fillister head
SHH	slotted hex head
SQH	square head
SHWH	slotted hex washer head
SPH	slotted pan head
SRH	slotted round head
STD	standard
TAP	self tapping
TTH	Torx truss head
WH	wing head

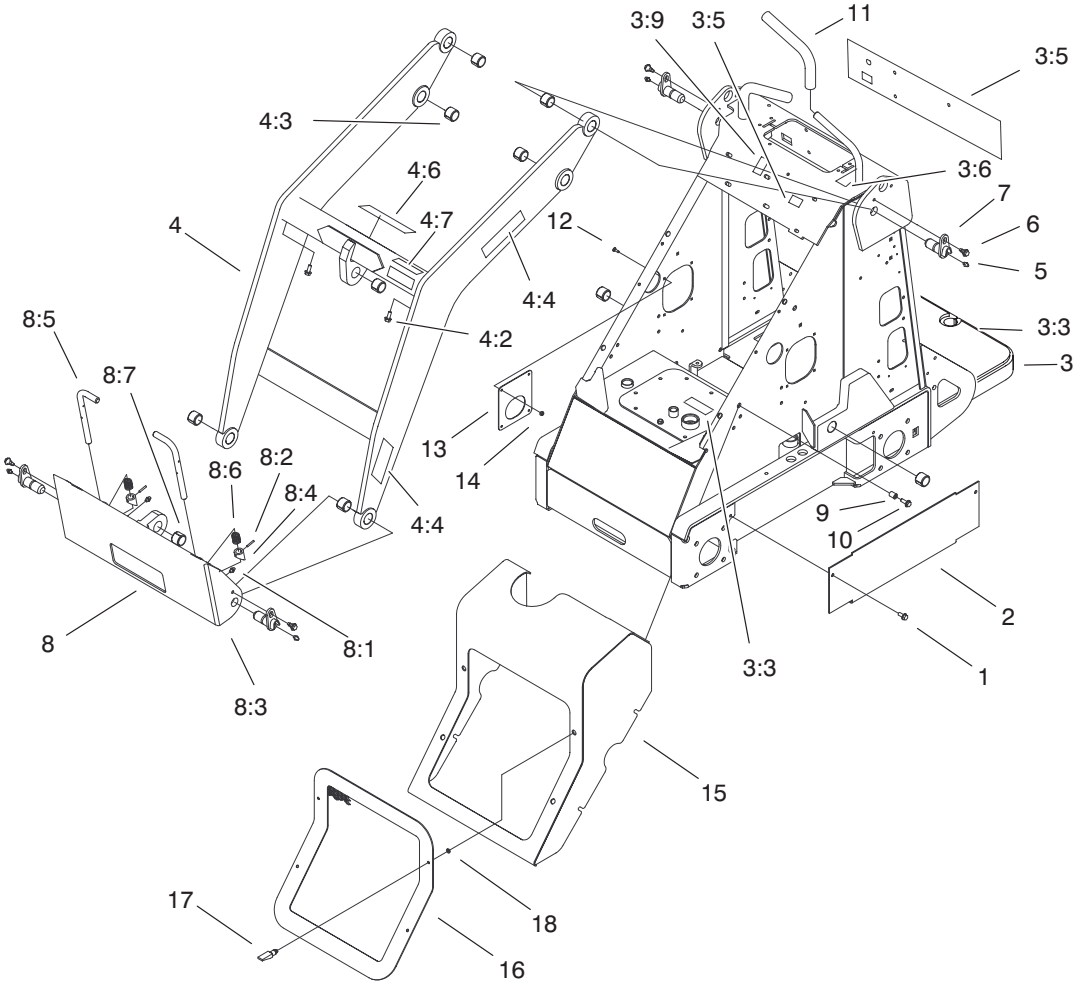

Sheet No.:2

C–2870

Frame and Loader Arm Assembly

Ref. No.	Part No.	Qty.	Description
1	32144–70	6	Screw–HH
2	99–3020–01	2	Cover–Hose
3	99–3154	1	Frame & Decal ASM
3:2	98–4871	2	Bushing–Tension
3:3	98–9947	2	Tread–Foot
3:5	100–1706	1	Decal–Panel, Control
3:6	98–8219	1	Decal–Throttle
3:7	100–1703	1	Decal–Limiter, Speed
3:8	93–6686	1	Decal–Oil, Hydraulic
3:9	98–8235	1	Decal–Selector
*3:10	100–1704	1	Decal–Power, Auxiliary
4	99–3156	1	Loader ASM
4:2	32144–70	2	Screw–HH
4:3	98–4871	7	Bushing–Tension
4:4	93–9367	4	Decal–Warning
*4:5	100–1701	1	Decal–Danger
4:6	100–1702	1	Decal–Caution
4:7	99–3088	2	Decal–No Riders
5	302–5	4	Fitting–Lube

Ref. No.	Part No.	Qty.	Description
6	99–5105	4	Screw–Shoulder
7	99–1414	4	Pin–Pivot
8	98–4690	1	Quick Attach ASM
8:1	302–5	2	Fitting–Lube
8:2	32121–94	2	Pin–Special
8:3	98–4691–03	1	Mount–Attach, Quick
8:4	98–4692	2	Cam–Attach, Quick
8:5	100–3373	2	Pin–Qtach
8:6	98–4694	2	Spring–Compression
8:7	98–4871	1	Bushing–Tension
9	32148–7	4	Nut–Insert
10	3234–29	4	Screw–HHF
11	98–4845	2	Grip–Cushion
12	3229–34	4	Bolt–CARR
13	99–1427–03	1	Guard–Muffler
14	3296–2	4	Nut–Lock
15	99–5126–03	1	Hood ASM
16	99–3034–03	1	Cover ASM
17	74–5950	4	Latch–Swell
18	99–3058	4	Washer

* Not Illustrated

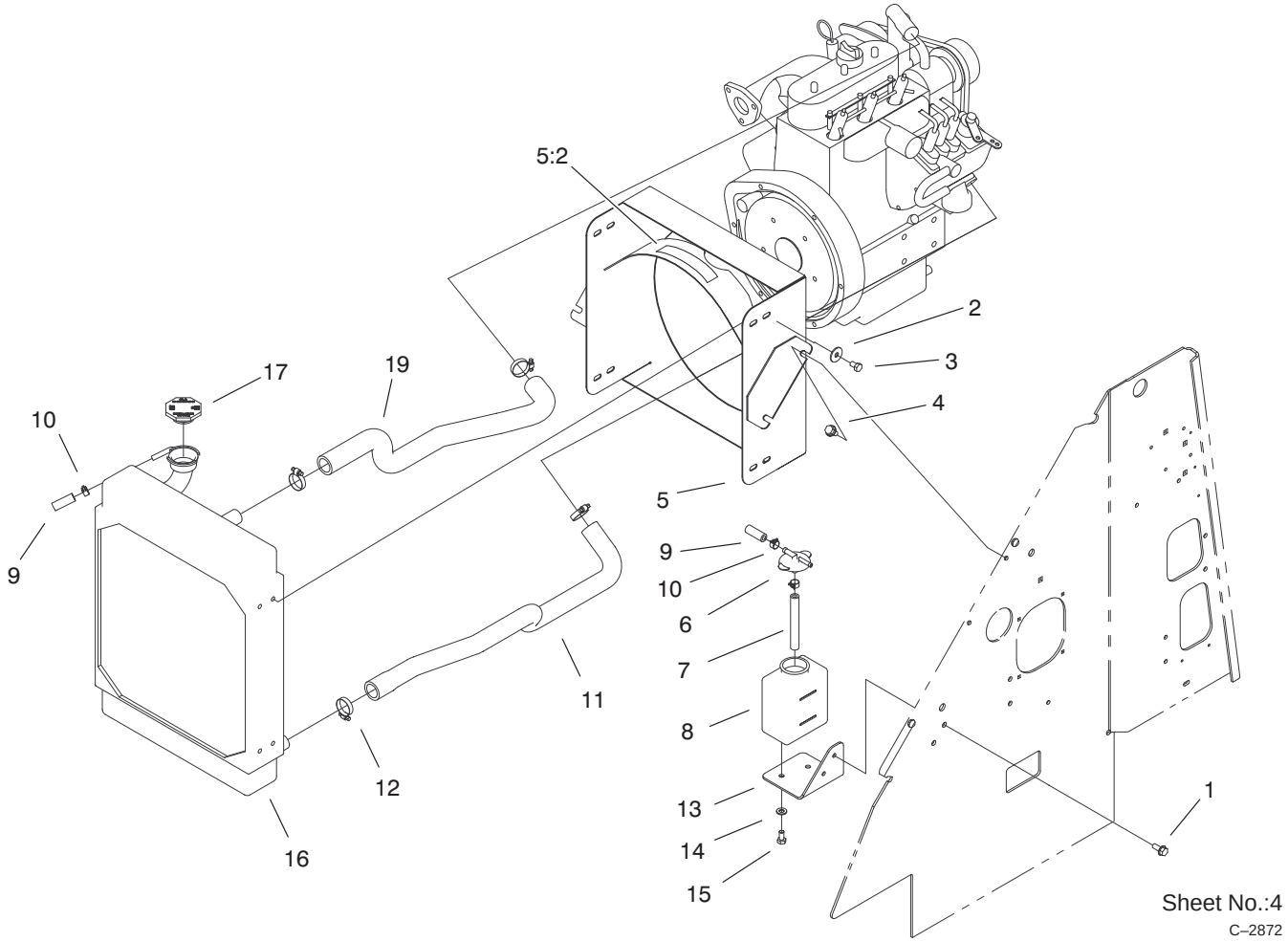

Radiator Mount Assembly

Ref. No.	Part No.	Qty.	Description
1	32144–70	2	Screw–HH
2	3256–82	8	Washer–Flat
3	322–1	8	Screw–HH
4	32144–14	4	Screw–HWH
5	100–2190	1	Shroud ASM
5:2	93–6681	1	Decal–Warning, Fan
6	93–2048	1	Cap–Tank, Overflow
7	94–1348	1	Hose–Tank, Recov
8	93–2049	1	Tank–Overflow
9	71–3383	1	Hose–Fuel
10	92–2379	3	Clamp–Hose
11	99–5042	1	Hose–Radiator, Lower
12	2412–34	4	Clamp–Hose
13	99–1446–01	1	Mount–Tank, Overflow
14	3256–23	2	Washer–Flat
15	99–5132	2	Bolt
16	99–5125	1	Radiator ASM
17	66–3240	1	Cap–Radiator
19	99–5043	1	Hose–Radiator,Upper

Ref. No.	Part No.	Qty.	Description

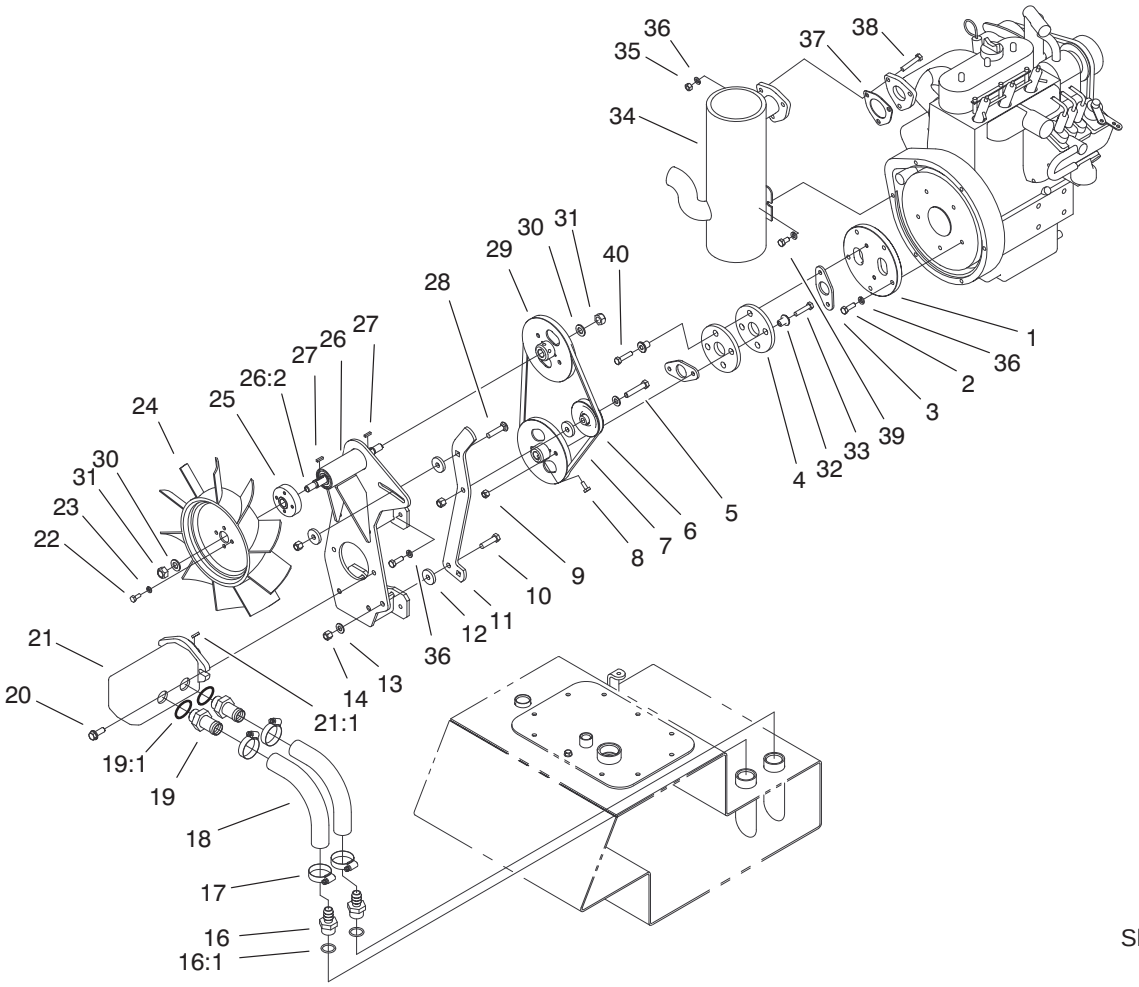

Sheet No.:5

C–2873

Pump and Fan Mount Assembly

Ref. No.	Part No.	Qty.	Description
1	99–1431	1	Adapter–Flywheel
2	99–5131	9	Bolt
3	99–1430	2	Spacer–Coupler
4	44–2230	2	Coupling–Rubber
5	323–10	1	Screw–HH
6	63–8140	1	Pulley–Idler
7	92–8876	1	V–Belt
8	3241–5	2	Screw–Set
9	3296–29	2	Nut–Lock
10	323–8	1	Screw–HH
11	100–1727–01	1	Mount–Tensioner
12	99–5121	4	Spacer
13	3256–24	2	Washer–Flat
14	3296–39	3	Nut–Lock Ni
16	354–78	2	Connector–Hose
16:1	237–146	1	O–Ring
17	2412–111	4	Clamp
18	99–3046	2	Hose–Suction, Formed
19	99–3017	2	Fitting
19:1	237–81	1	O–Ring
20	66–9300	2	Screw–Flange
21	98–4702	1	Pump – Gear, Tandem
21:1	98–4700	1	Key–Square
*21:2	99–1353	1	Kit–Seal, Pump
22	321–3	4	Screw–HH

Ref. No.	Part No.	Qty.	Description
23	3253–3	4	Washer–Lock/Sp
24	99–5119	1	Fan
25	99–1439	1	Adapter–Fan
26	99–1449	1	Pump Mount ASM
26:2	99–5118	1	Shaft–Fan
*26:3	38–7820	2	Bearing–Ball
27	100–1715	2	Key–Square
28	3231–5	1	Screw–CARR
29	99–5111	2	Pulley–Keyed
30	33096–00	2	Washer–Flat
31	3296–19	2	Nut–Lock Ni
32	71–4411	4	Spacer
33	322–7	2	Screw–HH
34	99–1442	1	Muffler–Kubota
35	3217–6	3	Nut–Hex
36	3253–4	13	Washer–Lock/Sp
37	100–2238	1	Gasket–Muffler
38	322–9	3	Screw–HH
39	99–5132	1	Bolt
40	99–5133	2	Bolt

* Not illustrated

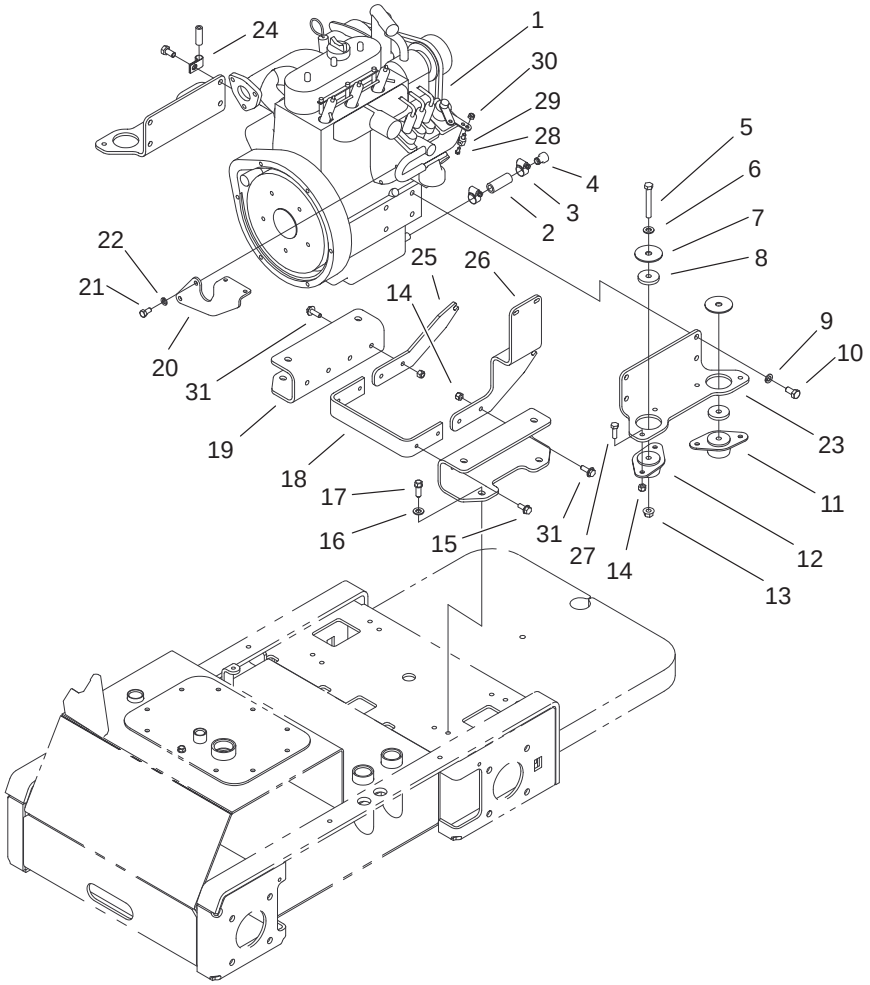

Sheet No.:6

Engine Assembly

Ref. No.	Part No.	Qty.	Description
1	100–2200	1	Engine–Kubota
2	56–2230	1	Hose–Gas
3	2412–36	2	Clamp–Hose
4	99–1445	1	Plug–Oil, Diesel
5	323–13	4	Screw–HH
6	3256–24	4	Washer–Flat
7	87–5100	4	Washer – Snubbing
8	98–4596	4	Washer–Mount, Engine
9	42–9600	6	Lockwasher–Spring, Mid
10	99–5130	8	Bolt
11	83–1030	2	Mount–Engine
12	93–5265	2	Mount–Engine
13	32128–29	4	Locknut–Flange
14	3296–29	12	Nut–Lock
15	32144–70	4	Screw–HH
16	3256–80	4	Washer–Flat
17	95–1726	4	Screw–Taptite w/Patch
18	99–1429–01	1	Bar–Support, Mount
19	99–1428–01	2	Bar–Brace, Mount
20	99–5007–01	1	Mount–Solenoid
21	99–5132	2	Bolt
22	3253–4	2	Washer–Lock/Sp
23	99–1426–01	2	Mount–Engine

Ref. No.	Part No.	Qty.	Description
24	2412–138	1	Clamp–R
25	99–3081–03	1	Support–Cover
26	99–3082–03	1	Support–Cover
27	322–5	8	Screw–HH
28	25–8640	1	Screw–Machine, HH
29	93–0021	1	Swivel–Cable, Throttle
30	3296–13	1	Nut–Lock Ni
31	3234–29	4	Screw–HHF

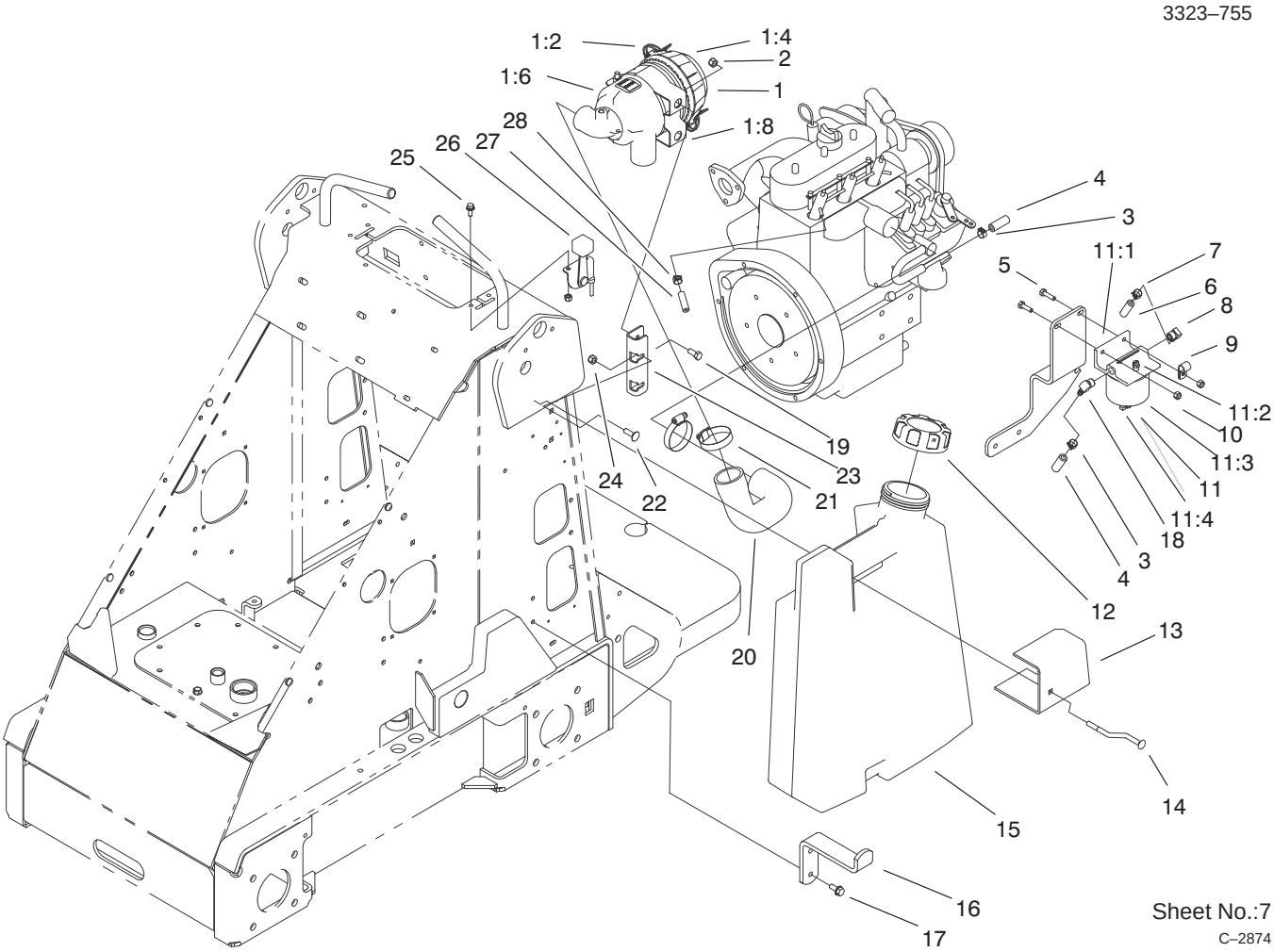

Fuel Tank and Air Filter Assembly

Ref. No.	Part No.	Qty.	Description
1	99–3160	1	Air Cleaner ASM
*1:1	99–3173	1	Element–Filter, Air
1:2	99–3174	2	Clip–Cleaner, Air
*1:3	99–3175	1	Valve–Ejector, Dust
1:4	99–3176	1	Cover–Cleaner, Air
*1:5	99–3183	1	Tube ASM
1:6	99–3184	1	Housing–Cleaner, Air
*1:7	99–3198	1	Filter–Safety
1:8	99–3197	1	Filter Mount Bracket ASM
2	3296–29	3	Nut–Lock
3	92–2379	2	Clamp–Hose
4	63–7627	1	Hose–Fuel
5	321–6	2	Screw–HH
6	99–1438	1	Hose–Fuel
7	2412–98	2	Clamp
8	304–96	1	Elbow
9	2412–73	1	Clamp–R
10	3296–42	4	Nut–Lock
11	63–7650	1	Separator–Filter/Water
11:1	63–8280	1	Head ASM
11:2	63–8290	1	Vent–Air
11:3	63–8300	1	Element–Spin–On
11:4	63–8310	1	Valve–Drain
12	98–2710	1	Diesel Fuel Cap ASM
13	99–1444–03	1	Plate–Mount, Left

Ref. No.	Part No.	Qty.	Description
14	98–4657	1	Bolt–Mount
15	99–1425	1	Fuel Tank ASM
*15:3	100–1596	1	Fitting–90°
*15:4	104048	1	Valve–Fuel
16	98–4656–03	1	Mount–Bottom, Tank
17	32144–70	2	Screw–HH
18	353–781	1	Fitting
19	322–3	2	Screw–HH
20	99–5041	1	Hose–Cleaner, Air
21	2412–92	2	Clamp–Hose
22	3230–2	2	Screw–CARR
23	99–3080–03	1	Mount–Cleaner, Air
24	32128–20	2	Nut–HF
25	3234–33	2	Screw–HHF
26	99–1422	1	Control–Throttle
27	76–4420	1	Hose–Line, Fuel
28	2412–146	2	Clamp–Hose

* Not illustrated

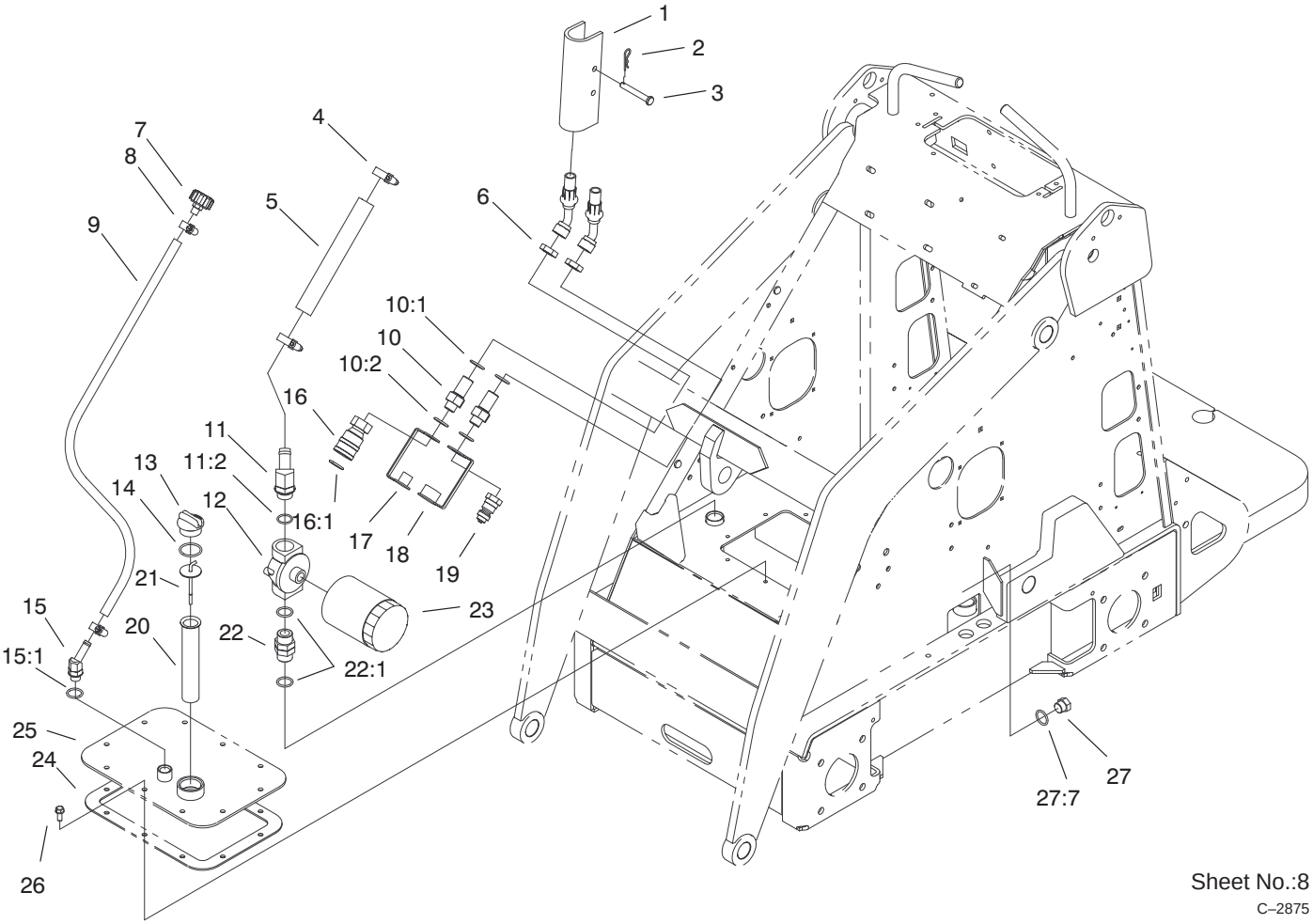

Sheet No.:8

C–2875

Hydraulic Tank Assembly

Ref. No.	Part No.	Qty.	Description
1	98–4675–01	2	Lock–Cylinder
2	3290–467	2	Pin–Cotter, Hair
3	283–52	2	Pin–Clevis
4	2412–129	2	Clamp–Hose
5	98–2713	1	Hose–Suction, Hyd
6	340–127	2	Nut–Bulkhead
7	68–6150	1	Breather–Air
8	2412–36	2	Clamp–Hose
9	100–1748	1	Hose–Vent
10	98–9907	2	Union–Bulkhead, Orb
10:1	237–30	1	O–Ring
10:2	237–79	1	O–Ring
11	99–3016	1	Fitting–45°
11:2	237–81	1	O–Ring
12	92–5821	1	Filter Head ASM
13	93–7498	1	Plug–Plastic
14	237–123	1	O–Ring
15	354–126	1	Fitting–Hydraulic, 45
15:1	237–79	1	O–Ring
16	98–4699	1	Female–Disconnect, Quick
16:1	100–4165	1	Seal
17	98–9913	1	Plug–Dust
18	98–9912	1	Cap–Dust
19	98–4698	1	Male–Disconnect, Quick

Ref. No.	Part No.	Qty.	Description
20	61–2790	1	Filter–Screen
21	99–1351	1	Dipstick
22	98–9906	1	Fitting–Thread, Straight
22:1	237–81	2	O–Ring
23	54–0110	1	Filter–Oil, Transmission
24	98–9927	1	Gasket–Cover
25	100–1713–01	1	Cover ASM
26	98–9940	10	Screw
27	353–988	1	Plug–Hex, Hollow
27:7	237–79	1	O–Ring

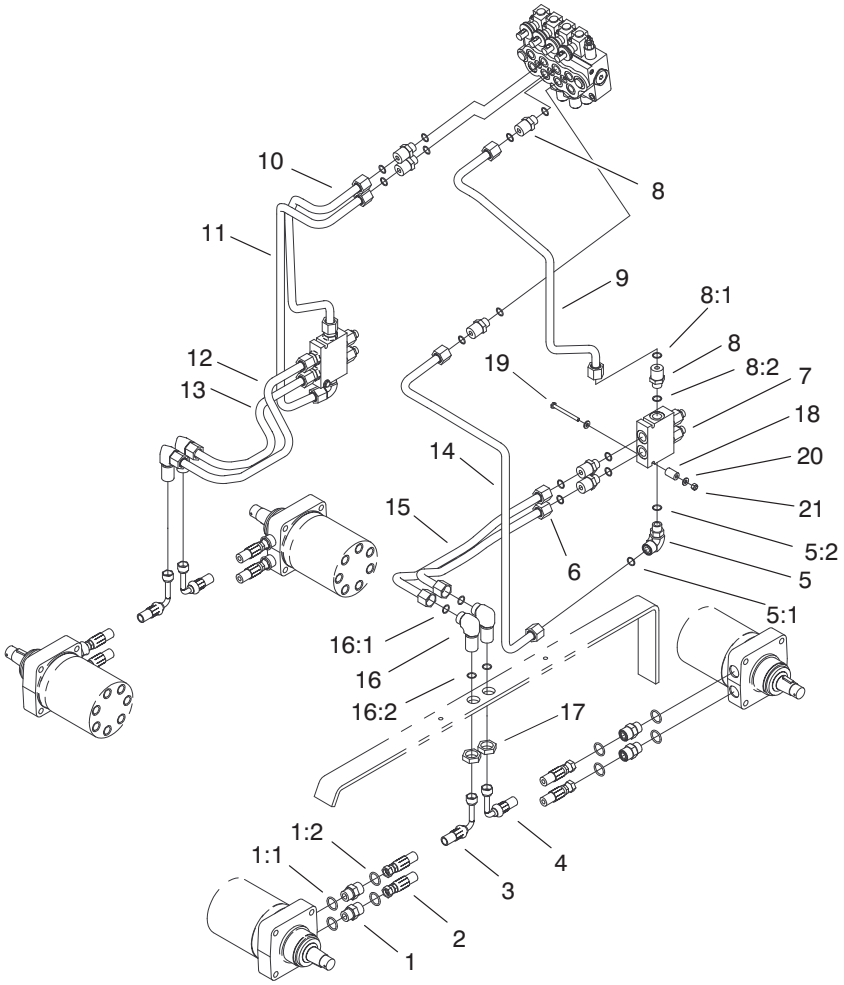

Sheet No.:10

C–2877

Hydraulic Motor Assembly

Ref. No.	Part No.	Qty.	Description
1	340–7	8	Adapter
1:1	237–65	1	O–Ring
1:2	237–80	1	O–Ring
2	99–3012	2	Hose–Motor, Hyd
3	99–3010	2	Hose–Motor, Front Hyd
4	99–3011	2	Hose–Motor, Rear Hyd
5	340–153	2	Fitting–Hyd
5:1	237–79	1	O–Ring
5:2	237–151	1	O–Ring
6	99–3022	1	Line–Hyd, Left A1
7	98–9050	2	Valve–Counterbalance
*7:1	98–2712	1	Kit–Seal, Valve
8	340–155	10	Fitting – Hyd
8:1	237–79	1	O–Ring
8:2	237–151	1	O–Ring
9	99–3027	1	Line–Hyd, Left B
10	99–3024	1	Line–Hyd, Right B
11	99–3029	1	Line–Hyd, Left A1
12	99–3025	1	Line–Hyd, Right B1
13	99–3028	1	Line–Hyd, Right A1
14	99–3023	1	Line–Hyd, Left A
15	99–3026	1	Line–Hyd, Left B1
16	340–72	4	Elbow–Bulkhead Union, 90°
16:1	237–65	2	O–Ring

Ref. No.	Part No.	Qty.	Description
17	340–74	4	Locknut–Bulkhead
18	99–3057	2	Spacer–Valve
19	321–23	2	Screw–HH
20	3256–22	4	Washer–Flat
21	3296–42	2	Nut–Lock

* Not illustrated

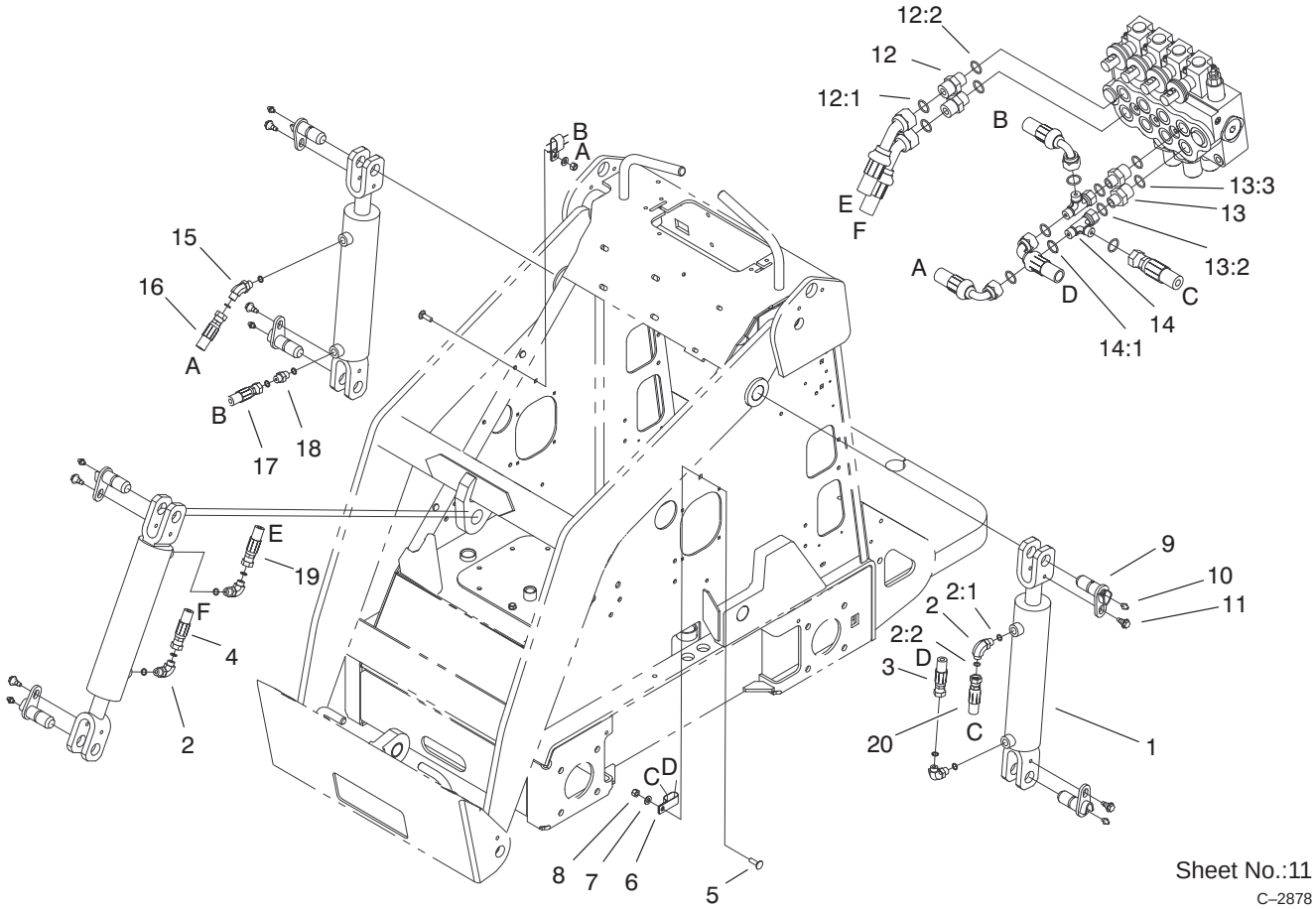

Hydraulic Cylinder Assembly

Ref. No.	Part No.	Qty.	Description
1	99–3051	3	Cylinder–Hydraulic
2		4	Adapter
2:1	237–42	1	O–Ring
2:2	237–35	1	O–Ring
3	98–4748	1	Hose–Hyd, Pressure Lo
4	98–4726	1	Hose–Hyd, Center Long
5	3230–2	2	Screw–CARR
6	2412–137	2	Clamp–Tube
7	3256–23	2	Washer–Flat
8	3296–29	2	Nut–Lock
9	99–1414	6	Pin–Pivot
10	302–5	6	Fitting–Lube
11	99–5105	6	Screw–Shoulder
12	340–3	2	Adapter
12:1	237–22	1	O–Ring
12:2	237–79	1	O–Ring
13	340–133	2	Adapter
13:2	237–78	1	O–Ring
13:3	237–35	1	O–Ring
14	340–151	2	Fitting
14:1	237–75	3	O–Ring
15	340–137	1	Fitting
16	98–4725	1	Hose–Loader, Hyd
17	100–1731	1	Hose–Hyd, Right

Ref. No.	Part No.	Qty.	Description
18	340–1	1	Adapter
19	98–4727	1	Hose–Hyd, Center Straight
20	99–3109	1	Hose–Loader, Hyd.

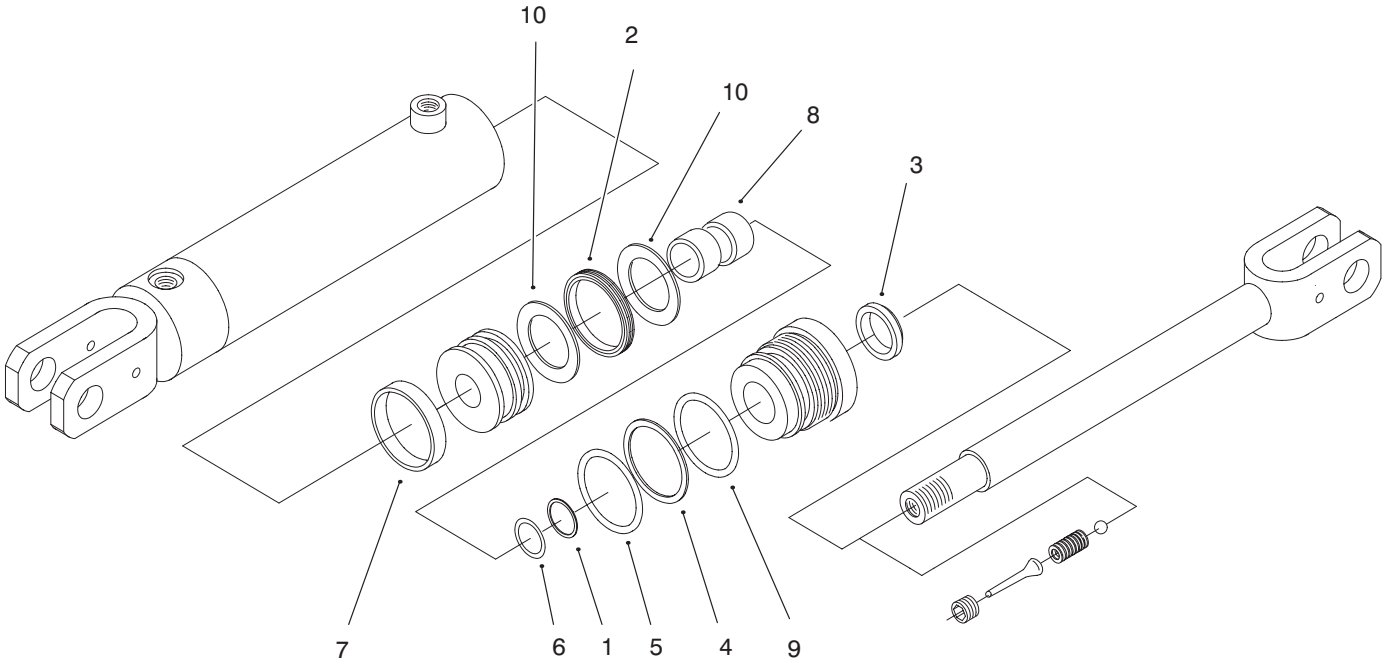

Sheet No.:A1

Hydraulic Cylinder No. 99–3051

Ref. No.	Part No.	Qty.	Description
†1		1	Washer–Backup
†2		1	PSP Seal
†3		1	Rod–Wiper
†4		1	Washer–Backup
†5		1	O–Ring
†6		1	Polypak
†7		1	Wear Ring
†8		2	Wear Ring
†9		1	O–Ring
†10		2	Washer–Backup
*	99–3065	1	Seal Kit (Incl. Ref. #1–10)

Ref. No.	Part No.	Qty.	Description

* Not illustrated
† Not Serviced Seperately

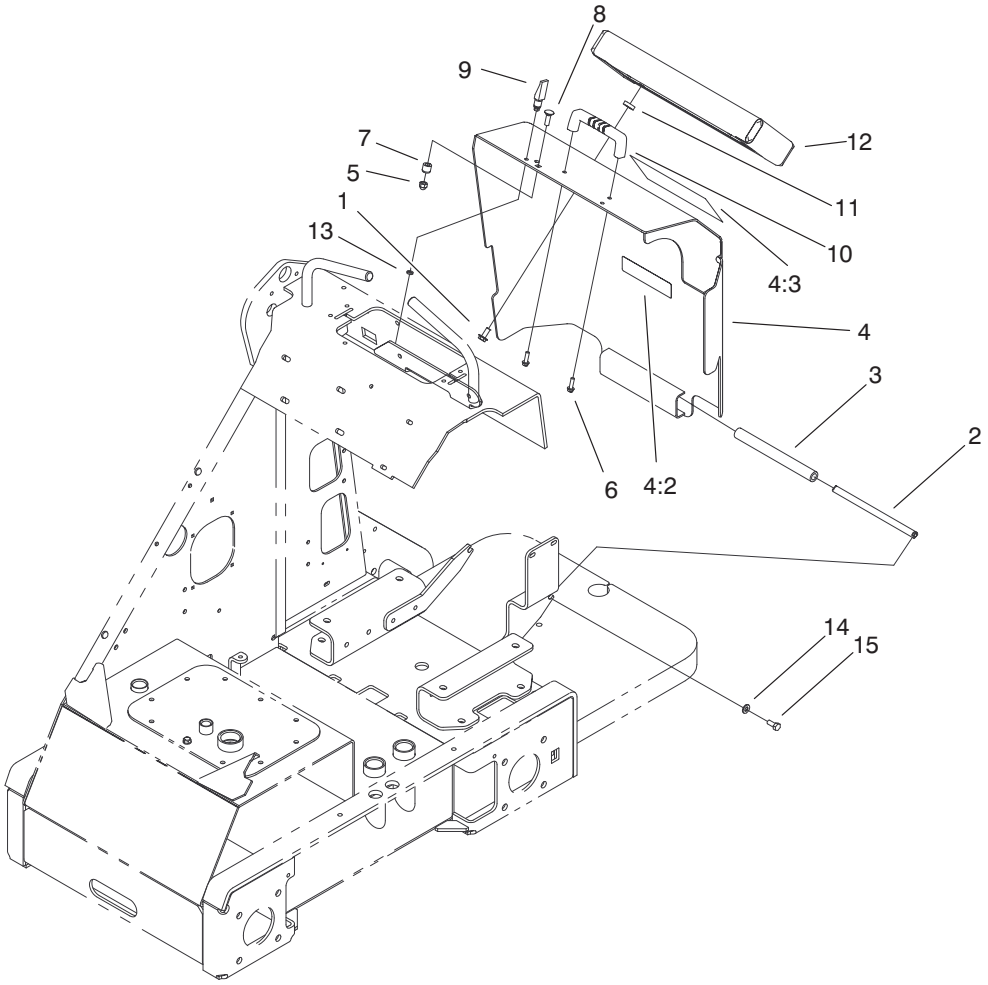

Sheet No.:12
C–2879

Rear Cover Assembly

Ref. No.	Part No.	Qty.	Description
1	3234–29	4	Screw–HHF
2	99–3083	1	Bar–Hinge
3	99–3085	1	Hose–Hinge
4	100–2191	1	Cover ASM
4:2	93–7814	1	Decal–Danger
4:3	100–1701	1	Decal–Danger
5	32111–8	1	Locknut–Acorn
6	46–8091	2	Special–HWH
7	99–3035	1	Spacer–Guide
8	3230–2	1	Screw–CARR
9	74–5950	2	Latch–Swell
10	65–5100	1	Handle–Door
11	26–4840	4	Spacer–Pin, Mtg
12	99–3101	1	Cover–Pad
13	99–3058	2	Washer
14	3256–23	2	Washer–Flat
15	322–3	2	Screw–HH

Ref. No.	Part No.	Qty.	Description

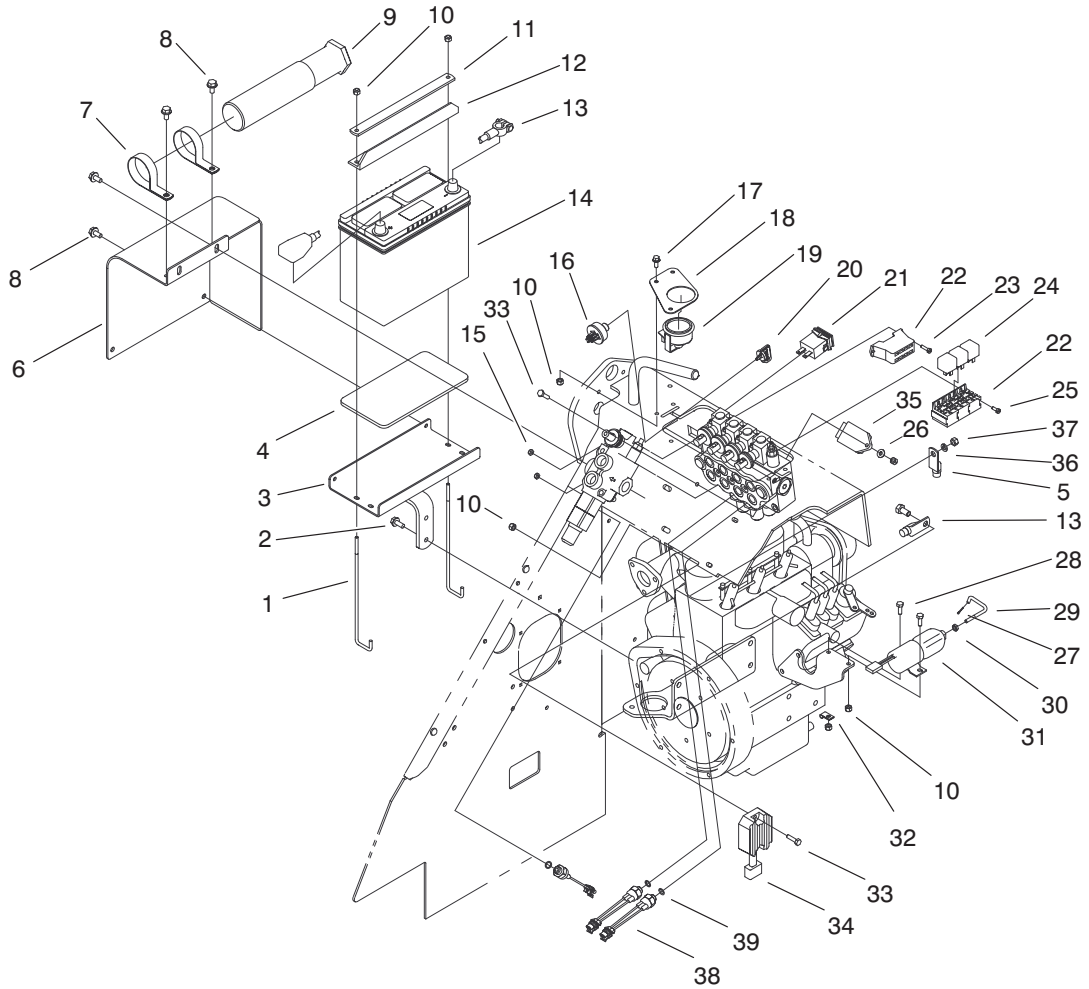

Sheet No.:14

C–2881

Electrical Components Assembly

Ref. No.	Part No.	Qty.	Description
1	99–5035	2	Retainer–Battery
2	32144–70	2	Screw–HH
3	99–5034–03	1	Mount–Battery
4	99–5030	1	Pad–Battery
5	100–1708	1	Cable–Battery, Positive
6	100–1721–03	1	Cover–Battery
7	2412–133	2	R–Clamp
8	32144–14	6	Screw–HWH
9	74–0720	1	Tube–Manual
10	3296–42	10	Nut–Lock Ni
11	99–5008–01	1	Retainer–Battery
12	99–5039	1	Retainer–Battery
13	100–1709	1	Cable–Battery, Negative
14	99–1441	1	Battery
15	3296–12	4	Nut–Lock
16	111216	1	Ignition Switch ASM
17	3234–33	3	Screw–HHF
18	100–1707–01	1	Mount–Lamp, Warning
19	100–1732	1	Cluster–Lamp
20	63–8360	2	Key–Ignition w/Shield
21	94–4208	1	Hourmeter
22	99–5134	1	Harness–Wire, Dingo Kubota
23	32105–13	2	Screw–Shh

Ref. No.	Part No.	Qty.	Description
24	98–7249	3	Relay–Spdt
25	32105–8	2	Screw
26	3256–22	1	Washer–Flat
27	3272–1	1	Pin–Cotter
28	321–4	2	Screw–HH
29	99–1423	1	Rod–Linkage, Threaded
30	3220–1	1	Nut–Jam
31	99–5006	1	Solenoid–Kubota
32	2412–31	1	Clamp–Boden
33	321–6	3	Screw–HH
34	100–2057	1	Regulator ASM
35	98–7611	1	Controller–Glow, F/W
36	100–2215	1	Washer–Spring
37	100–2171	1	Nut–Hexagon
38	72–4310	3	Switch
39	237–42	3	O–Ring

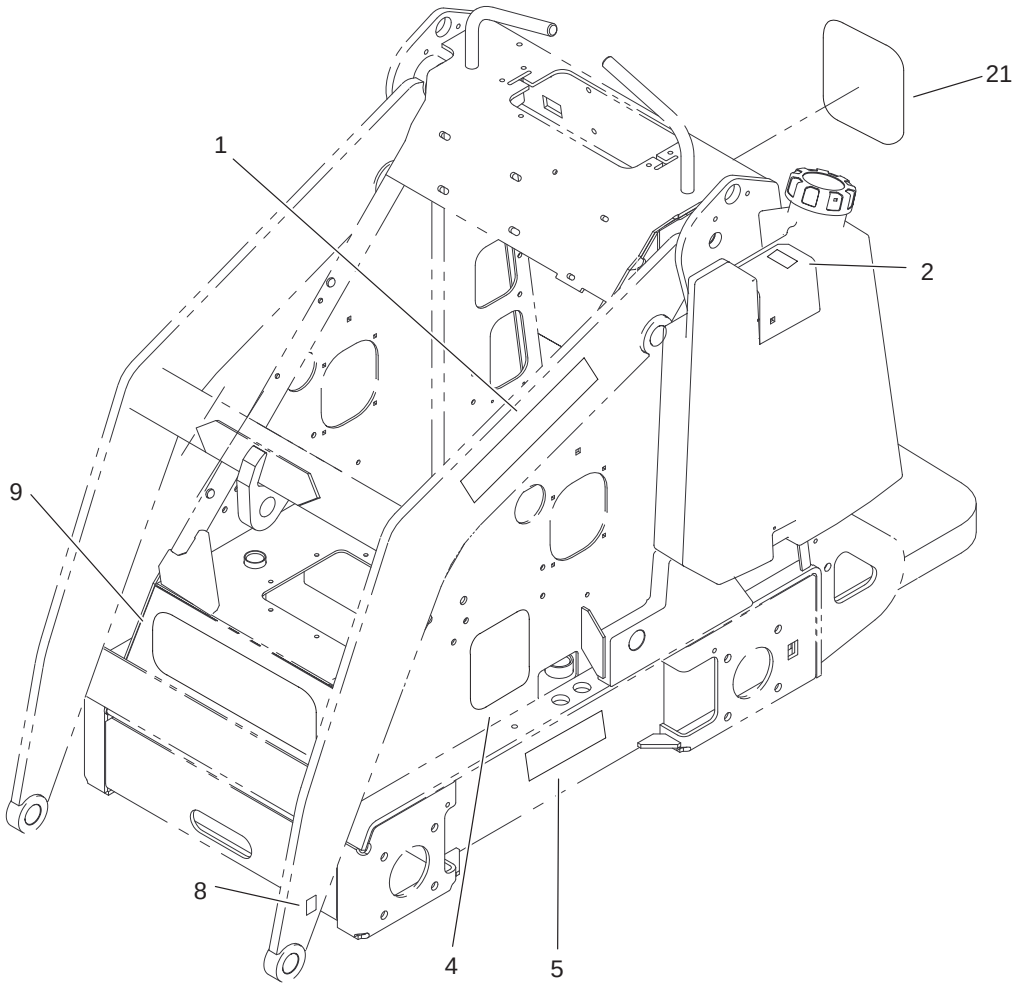

Sheet No.:15
C–2882

Decal Assembly

Ref. No.	Part No.	Qty.	Description
1	99–3167	2	Decal–Dingo 320d
2	93–6680	1	Decal – Diesel Only
4	100–4696	2	Decal–Side
5	99–3068	2	Decal–4–Paw
8	93–9084	6	Decal – Lift Point
9	98–4679	1	Decal – Front
21	98–4680	1	Decal – Side

Ref. No.	Part No.	Qty.	Description

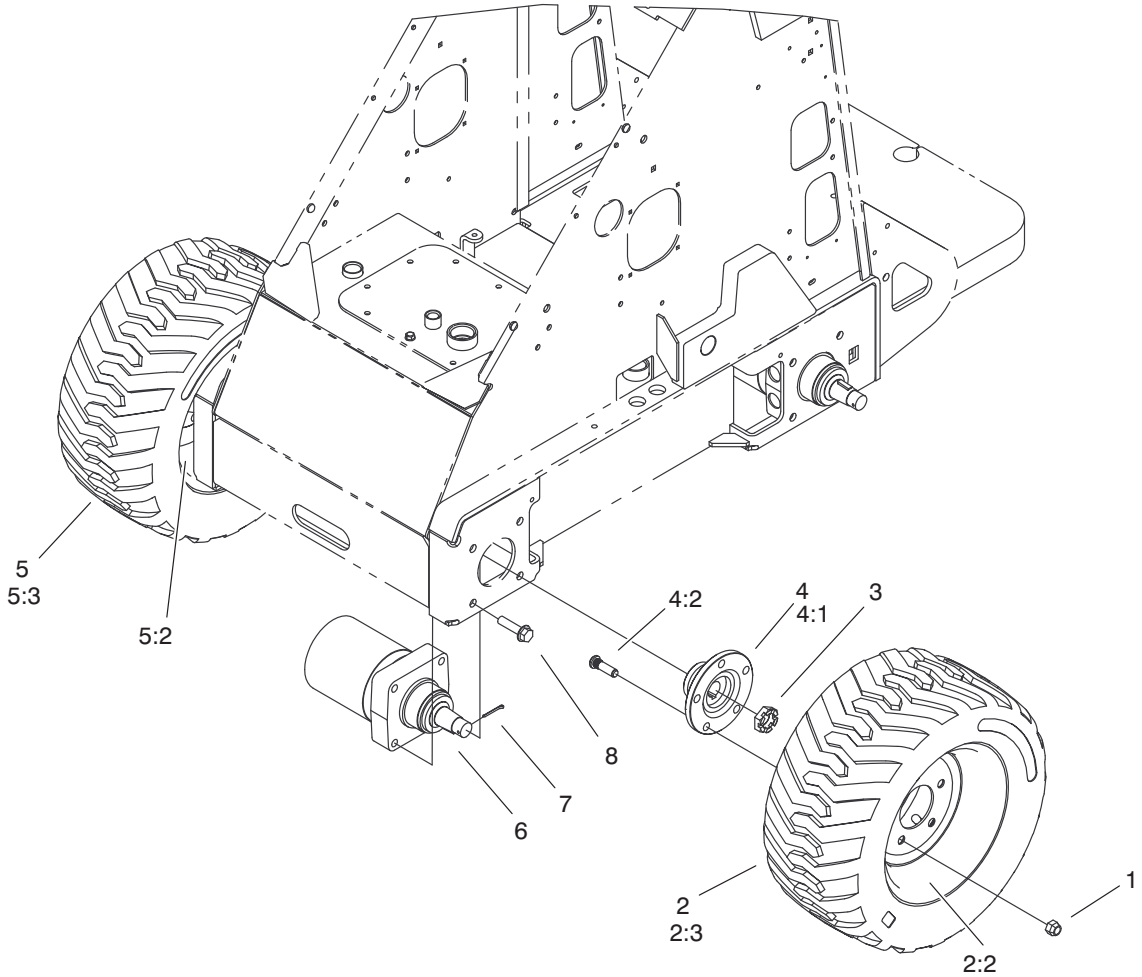

Sheet No.:19

Wheel and Motor Assembly

Ref. No.	Part No.	Qty.	Description
1	242–50	20	Nut–Lug
2	98–2747	2	LH Wheel & Tire ASM
*2:1	232–27	1	Stem–Valve
2:2	98–2748	1	Wheel
2:3	98–2749	1	Tire
3	99–3139	4	Nut–Wheel, Motor
4	99–3064	4	Hub ASM
4:1	99–3053–03	1	Hub–Wheel
4:2	10–6830	5	Stud–Type, Drive
5	99–1447	2	RH Wheel & Tire ASM
*5:1	232–27	1	Stem–Valve
5:2	98–2748	1	Wheel
5:3	98–2749	1	Tire
6	99–3052	4	Hydraulic Motor ASM
7	99–3171	4	Pin – Cotter
8	3234–27	16	Screw–Flange

Ref. No.	Part No.	Qty.	Description

* Not Illustrated

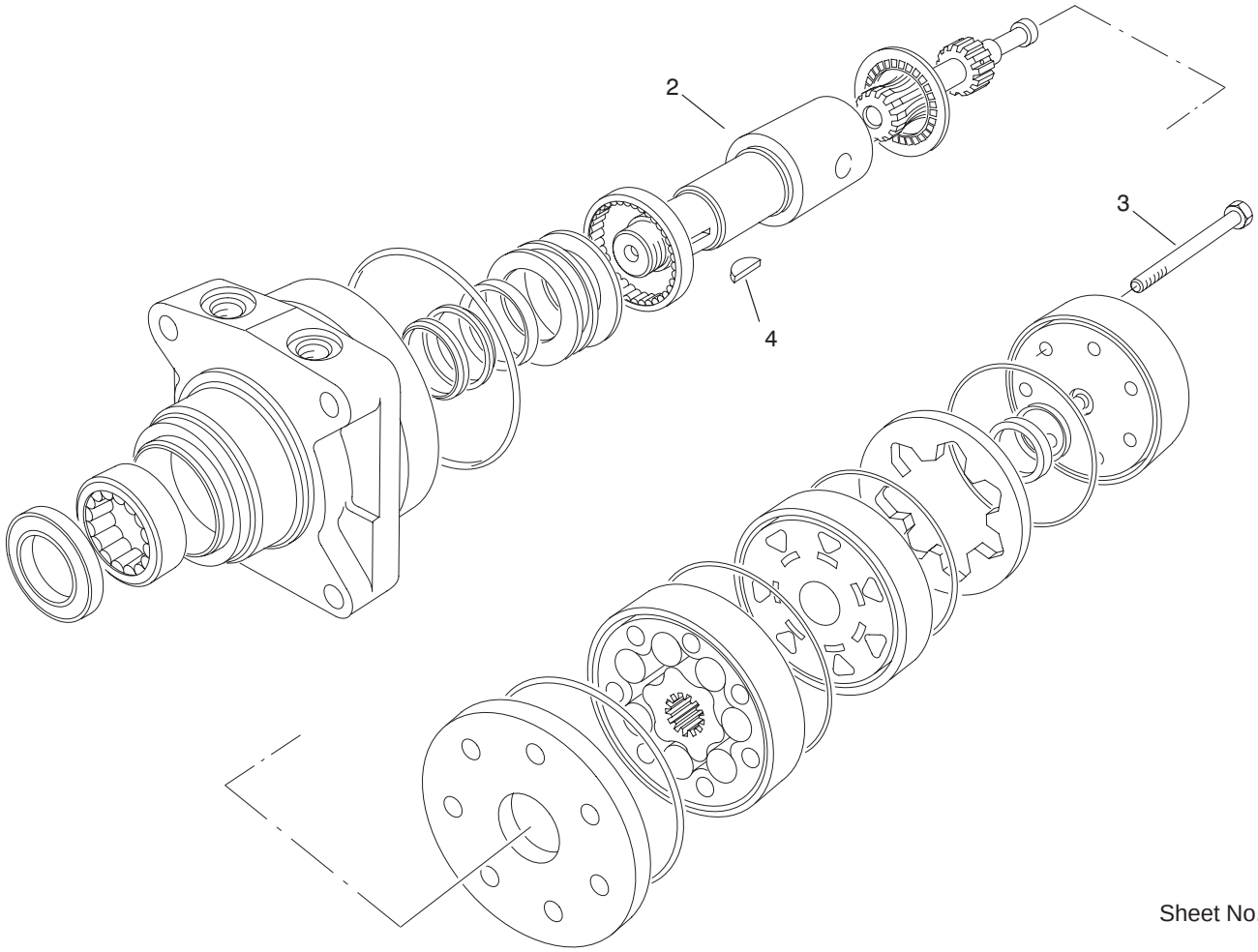

Sheet No.:A2

Hydraulic Motor Assembly No. 99–3052

Ref. No.	Part No.	Qty.	Description
*1	94–8178	1	Kit–Seal,Wheel Motor
2	99–3090	1	Shaft–Coupling
3	99–3091	7	Screw–Cap. Hex Hd
4	3257–42	1	Key–Woodruff

Ref. No.	Part No.	Qty.	Description

* Not illustrated

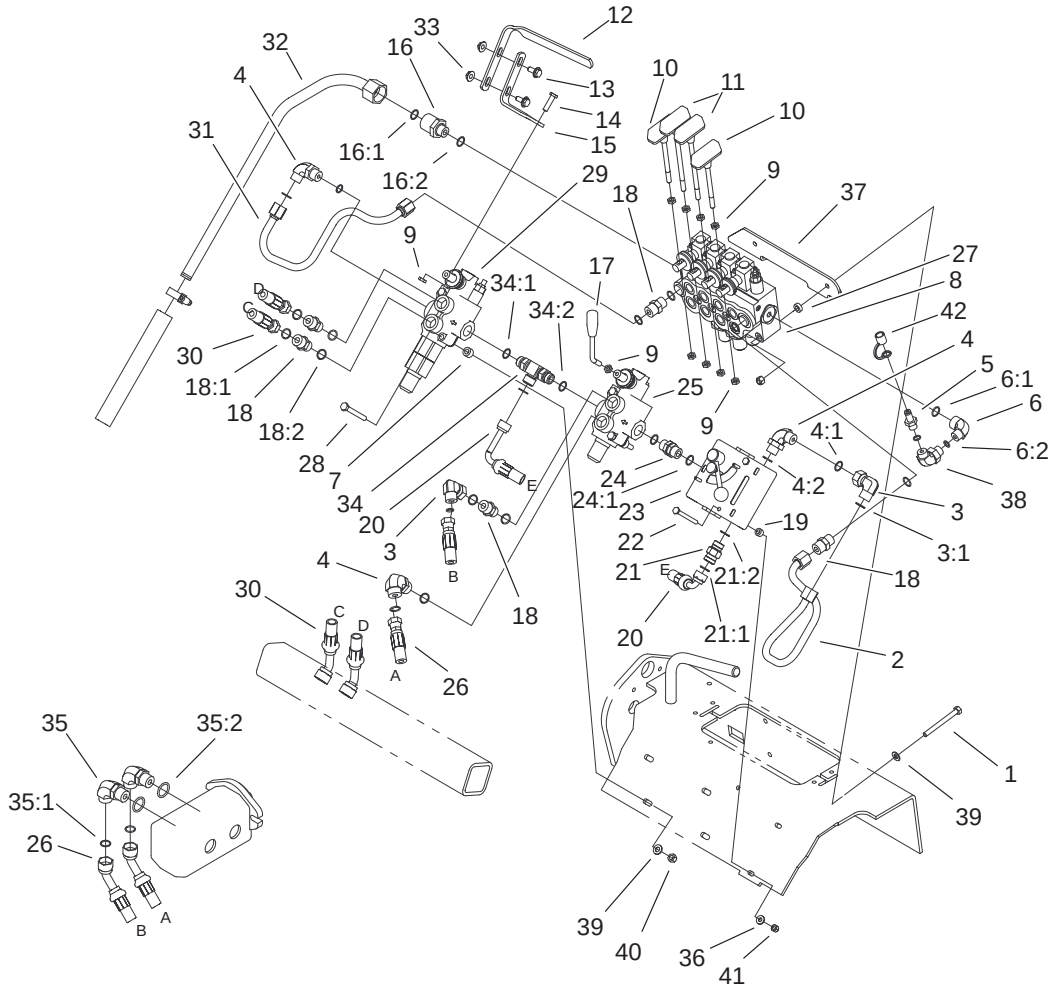

Sheet No.:20

Hydraulic Valve Assembly

Ref. No.	Part No.	Qty.	Description
1	322–20	3	Screw–HH
2	99–3030	1	Line–Hyd, Cf
3	94–6031	2	Fitting–Hyd
3:1	237–30	1	O–Ring
4	340–98	3	Fitting–90°
4:1	237–30	1	O–Ring
4:2	237–79	1	O–Ring
5	86–5480	1	Nipple–Test
6	340–18	1	Fitting
6:1	237–79	1	O–Ring
6:2	237–22	1	O–Ring
7	98–4695	5	Tube–Spacer
8	99–3070	1	Valve–Hydraulic, 4–Spool
9	42–9580	9	Nut–Hex
10	98–4671	2	Cylinder Handle ASM
11	98–4670	2	Drive Handle ASM
12	98–9090	1	Grip–Control
13	3234–5	1	Screw–HHF
14	33104–030	1	Screw–HHF
15	99–1376	1	Mount–Control
16	98–9921	1	Fitting–Thread, Straight
16:1	237–145	1	O–Ring
16:2	237–79	1	O–Ring
17	98–4729	1	Lever–Valve
18	340–4	5	Adapter

Ref. No.	Part No.	Qty.	Description
18:1	237–30	3	O–Ring
18:2	237–79	3	O–Ring
19	98–4799	2	Tube–Spacer
20	100–2245	1	Hose ASM
21	98–4735	1	Valve–Check, Hyd
21:1	237–30	1	O–Ring
21:2	237–79	1	O–Ring
22	321–14	2	Screw–HH
23	99–3073	1	Valve–Flow, Hydraulic
24	95–3209	1	Fitting–Thread, Straight
24:1	237–79	2	O–Ring
25	99–3072	1	Valve–Select, Hyd
26	100–1730	2	Hose–Pump, Hyd
27	99–3078	2	Spacer
28	322–13	4	Screw–HH
29	99–3077	1	Valve–Aux, Hydraulic
30	98–4728	2	Hose–Aux, Hyd
31	98–4724	1	Line–Aux, Hydraulic
32	99–3021	1	Line–Tank, Hydraulic
33	32128–44	1	Nut
34	98–9079	1	Adapter – Tee, Adjustable
34:1	237–30	1	O–Ring
34:2	237–79	2	O–Ring
35	340–105	2	Fitting–Hyd., 90°
35:1	237–30	1	O–Ring

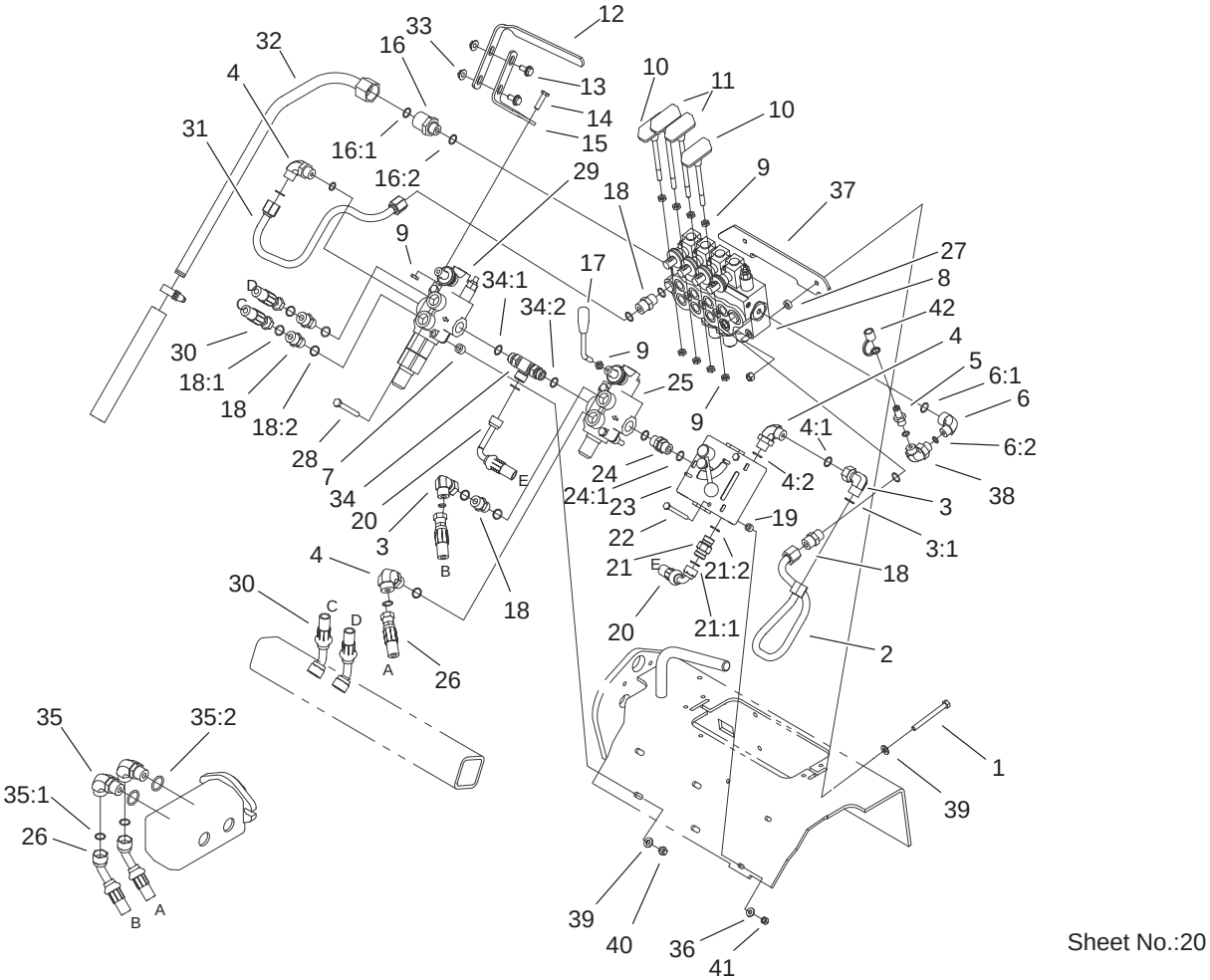

Hydraulic Valve Assembly (Continued)

Ref. No.	Part No.	Qty.	Description
35:2	237–80	1	O–Ring
36	3256–22	2	Washer–Flat
37	99–3079–03	1	Bracket–Mount, Cover
38	340–159	1	Fitting–Hyd., 90°
39	3256–23	7	Washer–Flat
40	3296–29	7	Nut–Lock
41	3296–42	2	Nut–Lock
42	354–79	1	Cap – Fitting, Yellow

Ref. No.	Part No.	Qty.	Description

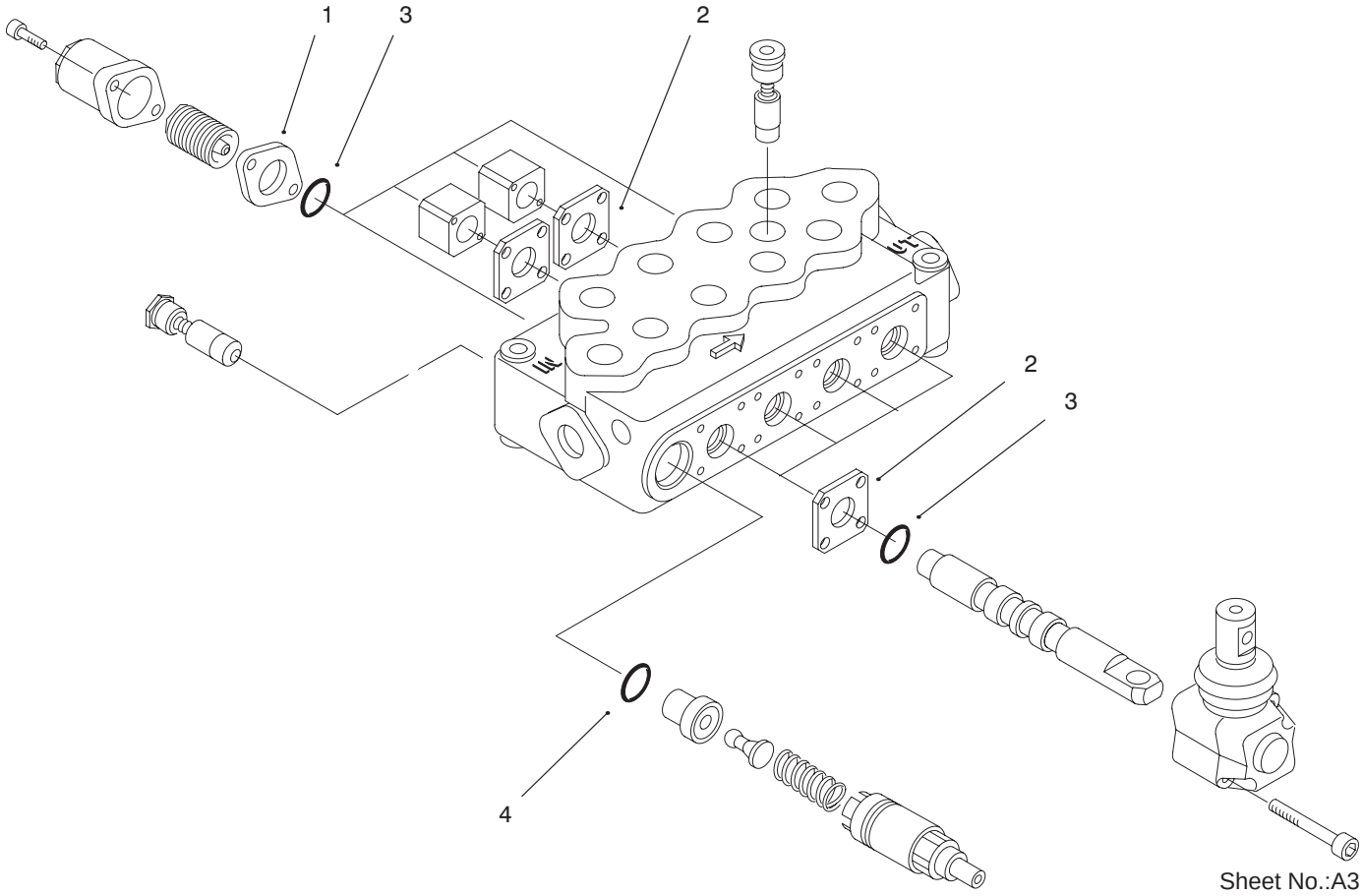

Hydraulic Valve Assembly No. 99–3070

Ref. No.	Part No.	Qty.	Description
1	99–3074	4	Gasket
2	99–3075	6	Gasket
†3		8	O–Ring
†4		1	O–Ring
*	99–4390	1	Seal Kit (Incl. Ref.# 3 & 4)

Ref. No.	Part No.	Qty.	Description

* Not Illustrated
† Not Serviced Seperately

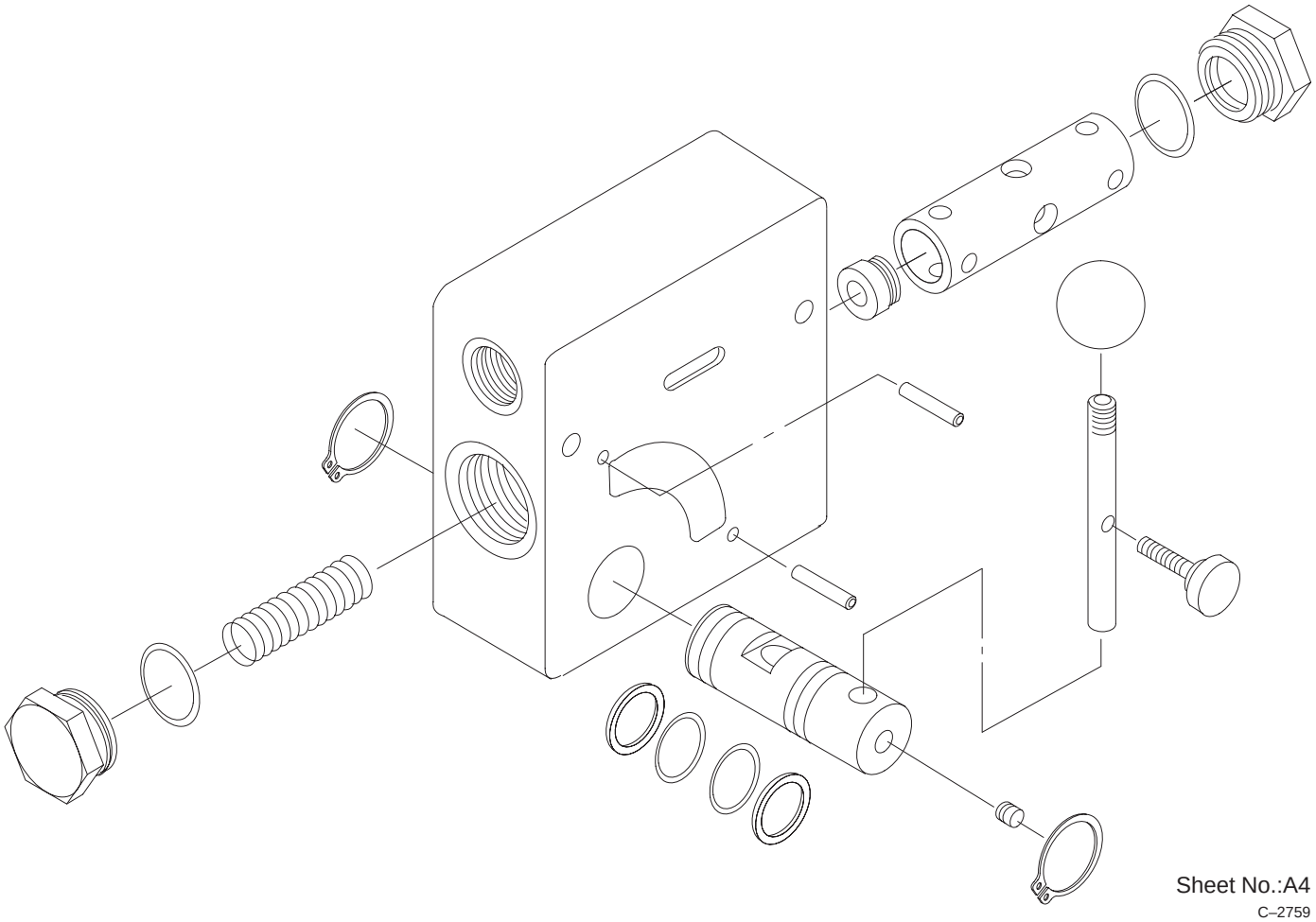

Sheet No.:A4

C–2759

Hydraulic Valve Assembly No. 99–3073

Ref. No.	Part No.	Qty.	Description
*1	98–9097	1	Seal Kit
*2	98–9098		Handle Kit

Ref. No.	Part No.	Qty.	Description

* Not Illustrated

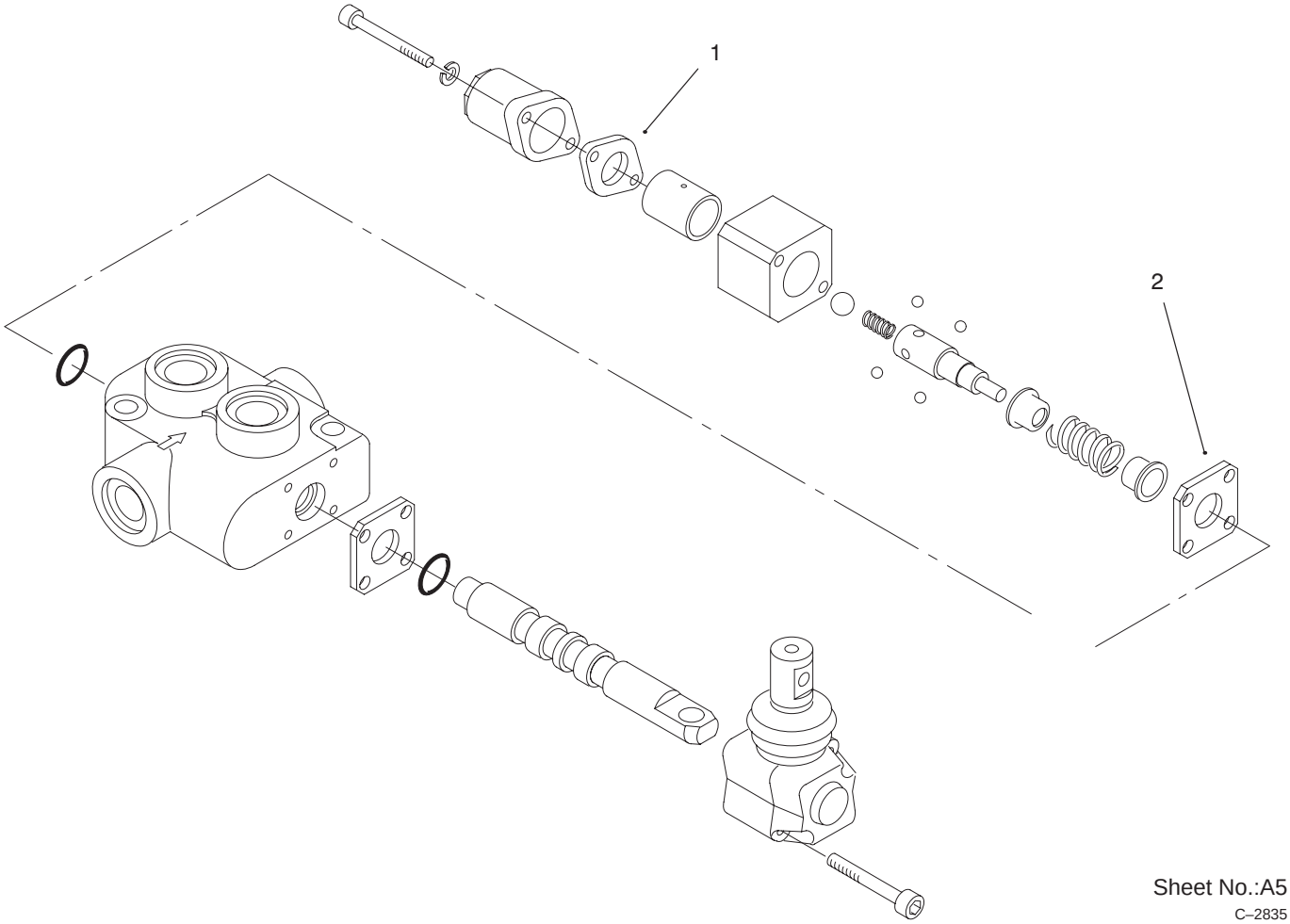

Sheet No.:A5
C–2835

Hydraulic Valve Assembly No. 99–3072

Ref. No.	Part No.	Qty.	Description
1	99–3074	1	Gasket
2	99–3075	1	Gasket
*3	99–4391	1	Kit–Seal, Sd4 (Incl. Ref. # 1, 2 & 4)
*4	99–3076	1	Tie–Strap

Ref. No.	Part No.	Qty.	Description

* Not Illustrated

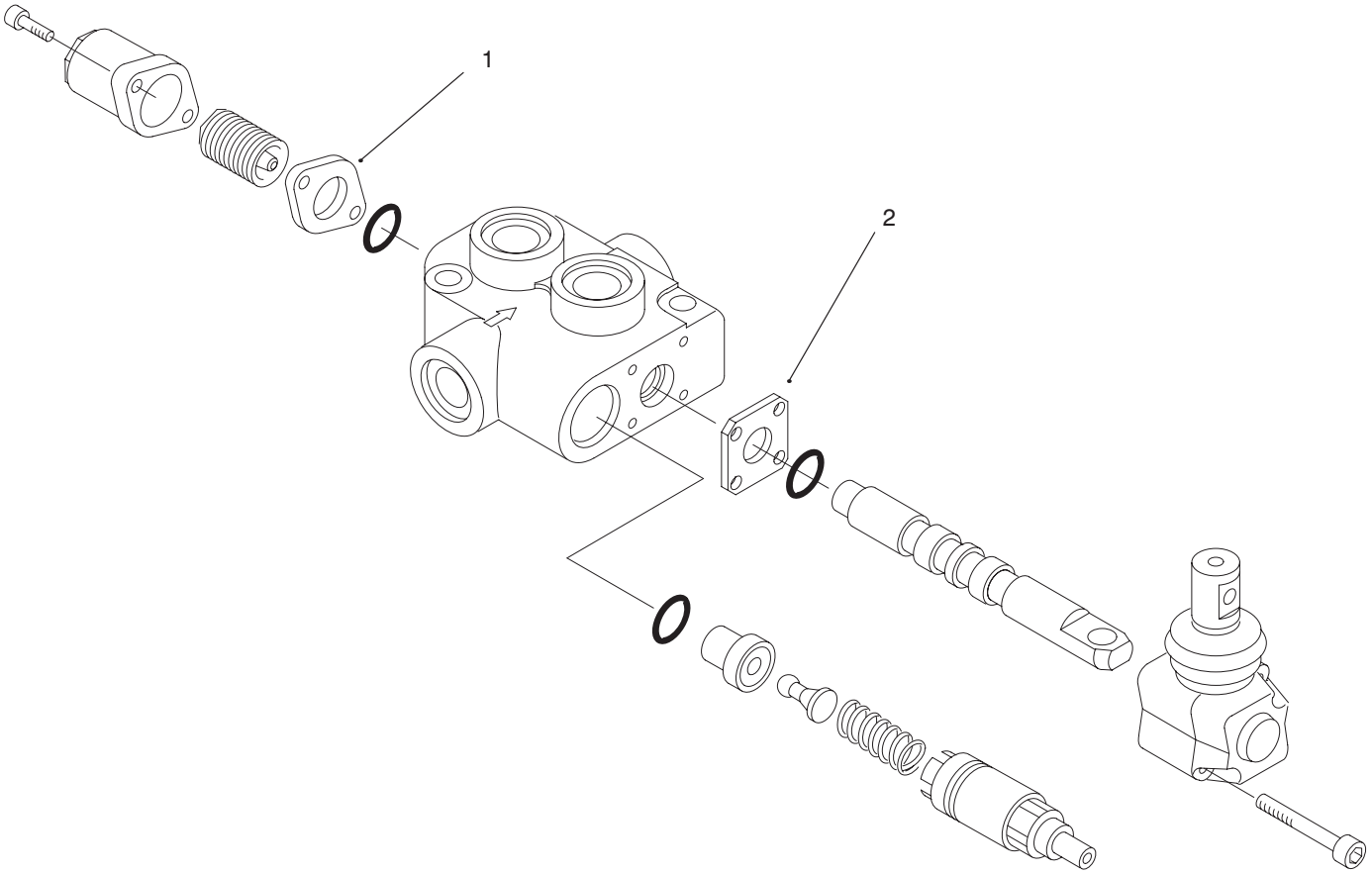

Sheet No.:A6

C–2836

Hydraulic Valve Assembly No. 99–3077

Ref. No.	Part No.	Qty.	Description
1	99–3075	3	Gasket
2	99–3074	1	Gasket
*3	99–4391	1	Kit–Seal, Sd4 (Incl. Ref. # 1, 2 & 4)
*4	99–3076	1	Tie–Strap

Ref. No.	Part No.	Qty.	Description

* Not Illustrated

Electrical Schematic

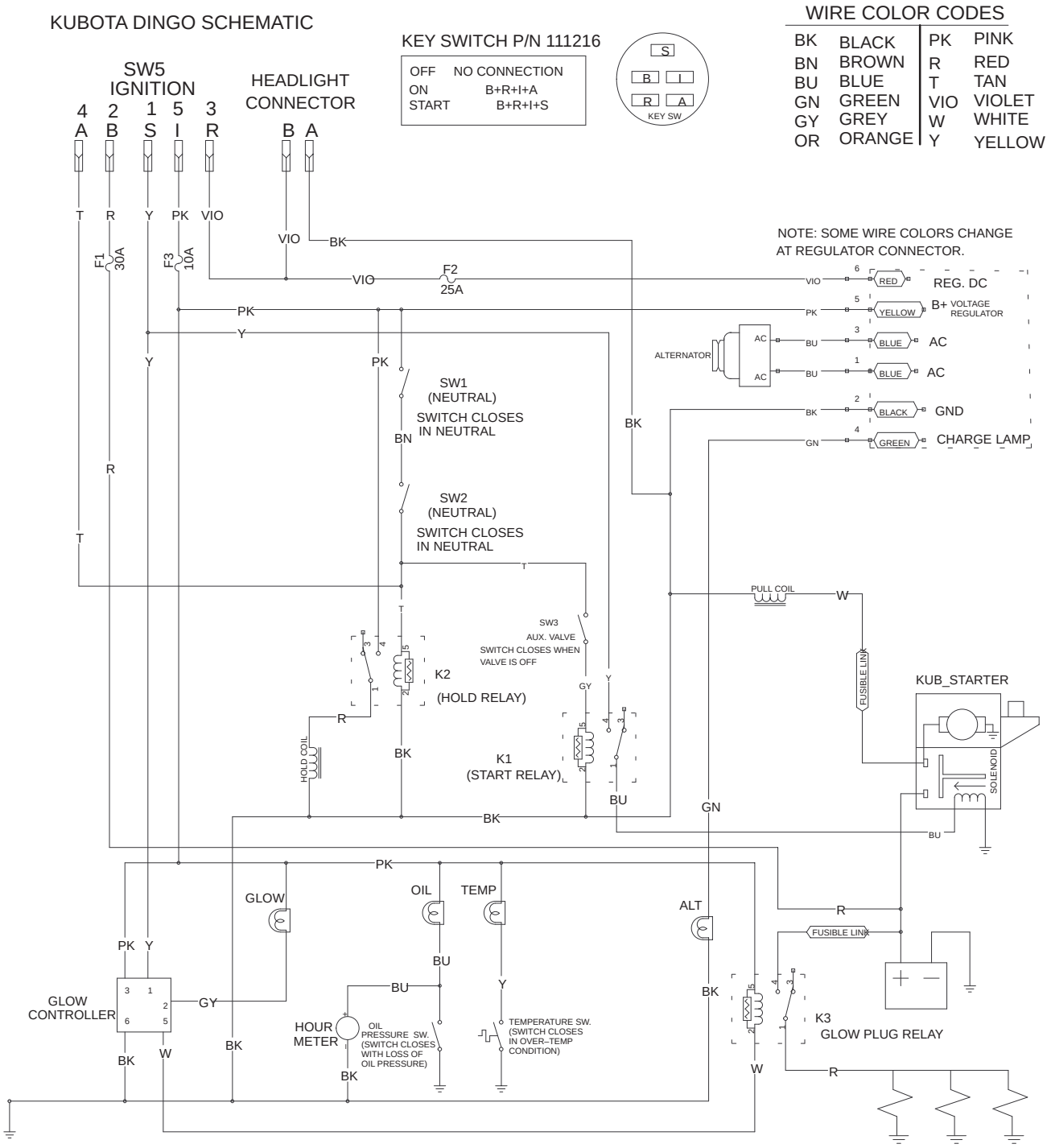

Hydraulic Schematic

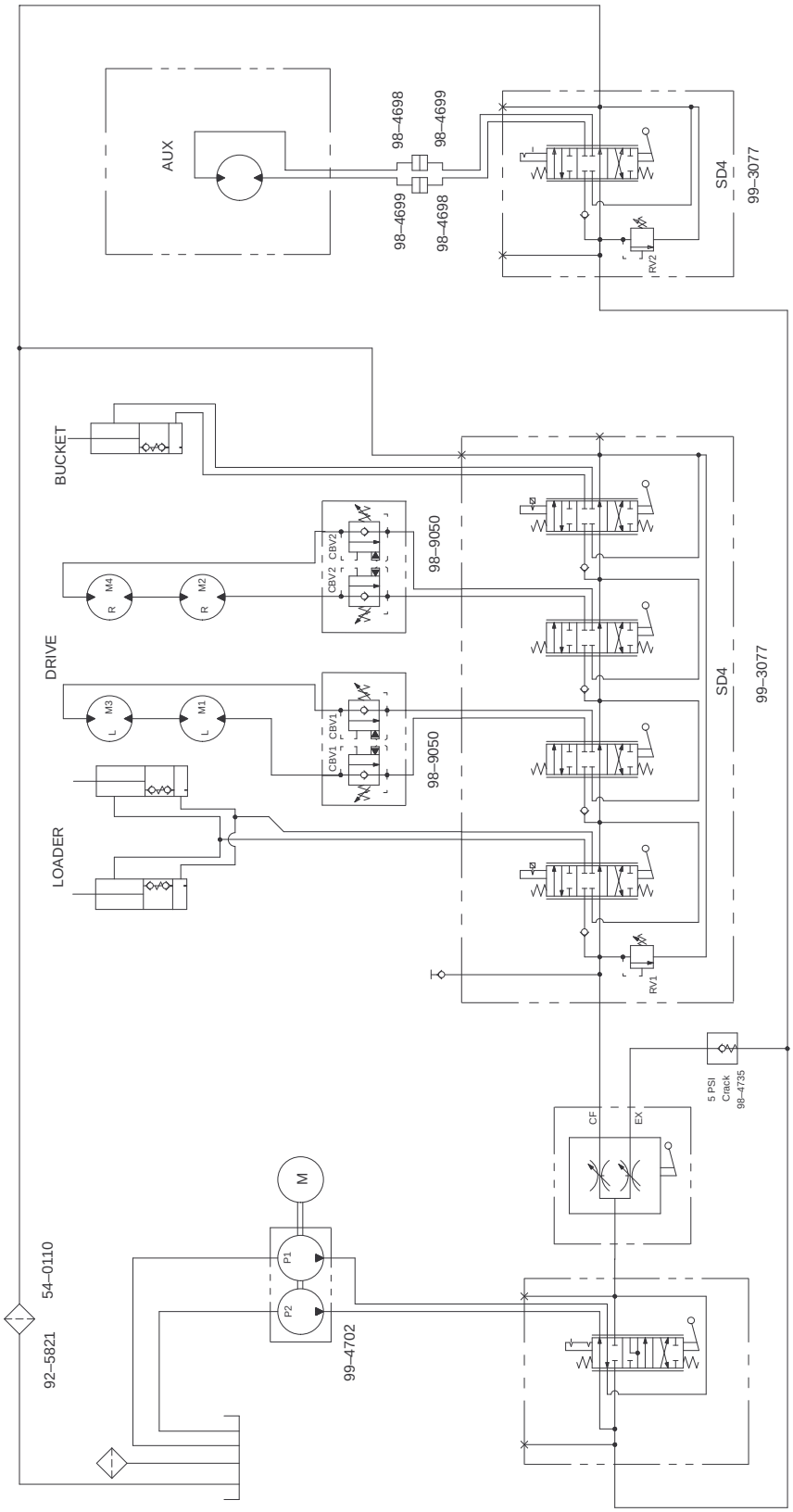

DISPLACEMENT AND PRESSURE CHART						
COMPONENT	DISPLACEMENT		PRESSURE		FLOWRATE*	
COMPONENT	CU IN/REV	CU CM/REV	PSI	BARS	GPM	LPM
P1	0.55 CU IN	9 CC			8.5	32.1
P2	0.24 CU IN	4 CC			3.7	14.0
M1, M3	29.1 CU IN	476 CC				
M2, M4	29.1 CU IN	476 CC				
RV1			3000 PSI	207 BARS		
RV2			3000 PSI	207 BARS		
CBV1			1000 PSI	69 BARS		
CBV2			1000 PSI	69 BARS		

* FLOWRATE CALCULATED AT 3750 RPM AND 95% EFFICIENCY.

C–2885

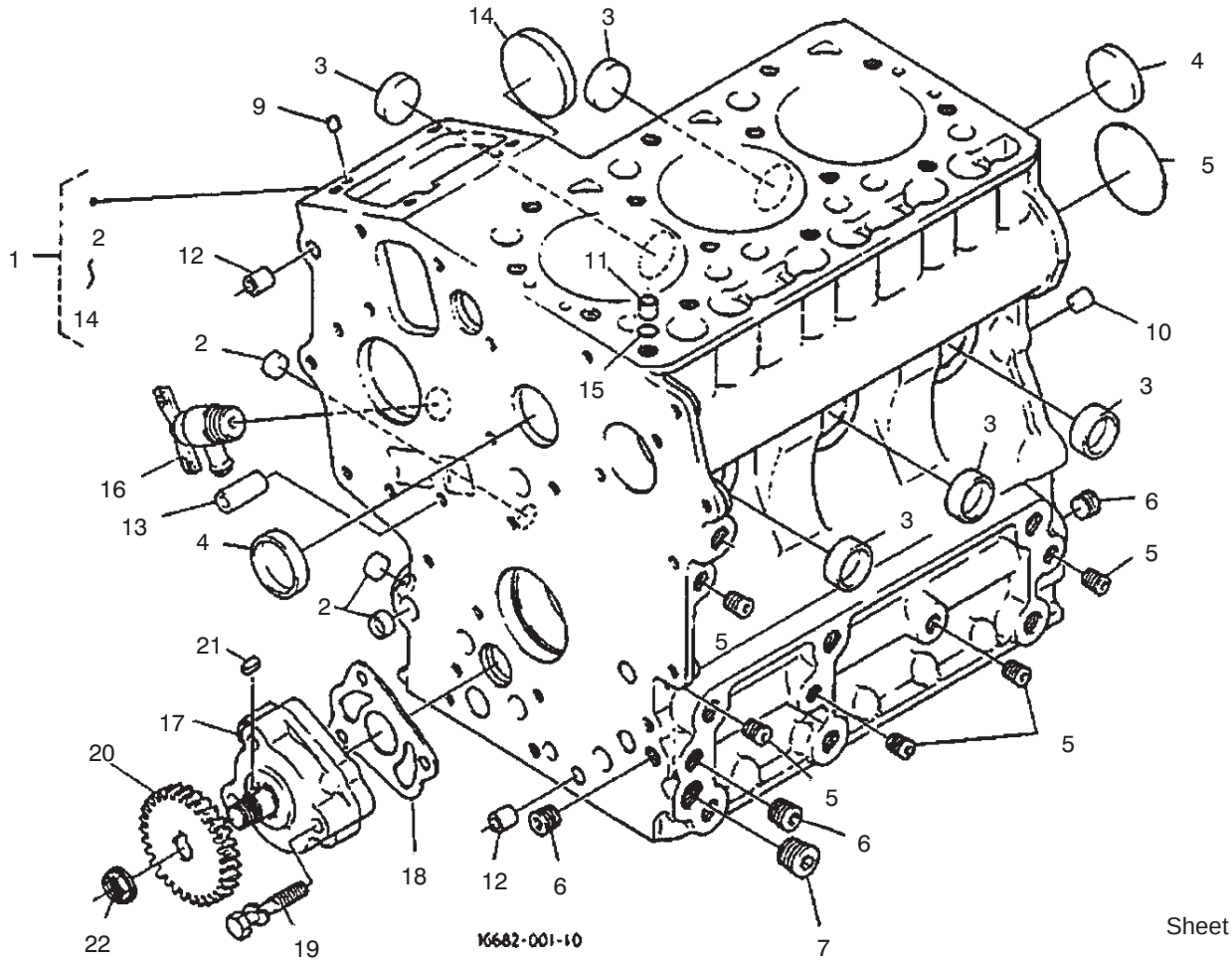

Sheet No.:2

Crankcase Assembly

Ref. No.	Part No.	Qty.	Description
1	100–2167	1	Crankcase–Comp.
2	100–2019	3	Cap–Sealing
3	100–2020	5	Cap–Sealing
4	98–9398	2	Cap–Sealing
5	98–7540	5	Cap–Sealing
6	98–7487	3	Plug
7	98–7488	1	Plug
8	100–1851	1	Plug
9	98–9375	2	Pin–Straight
10	98–9377	2	Pin–Straight
11	98–7506	1	Pin–Pipe
12	98–9387	2	Pin–Pipe
13	100–2051	2	Pin–Pipe
14	100–1991	1	Cover–Fuel, Camshaft
15	98–7509	1	O–Ring
16	98–9436	1	Drain Cock ASM
17	100–2002	1	Oil Pump ASM
18	100–2003	1	Gasket–Pump, Oil
19	100–1923	3	Bolt
20	100–1893	1	Gear–Drive, Oil Pump
21	98–7658	1	Key–Feather
22	100–1779	1	Nut–Flange

Ref. No.	Part No.	Qty.	Description

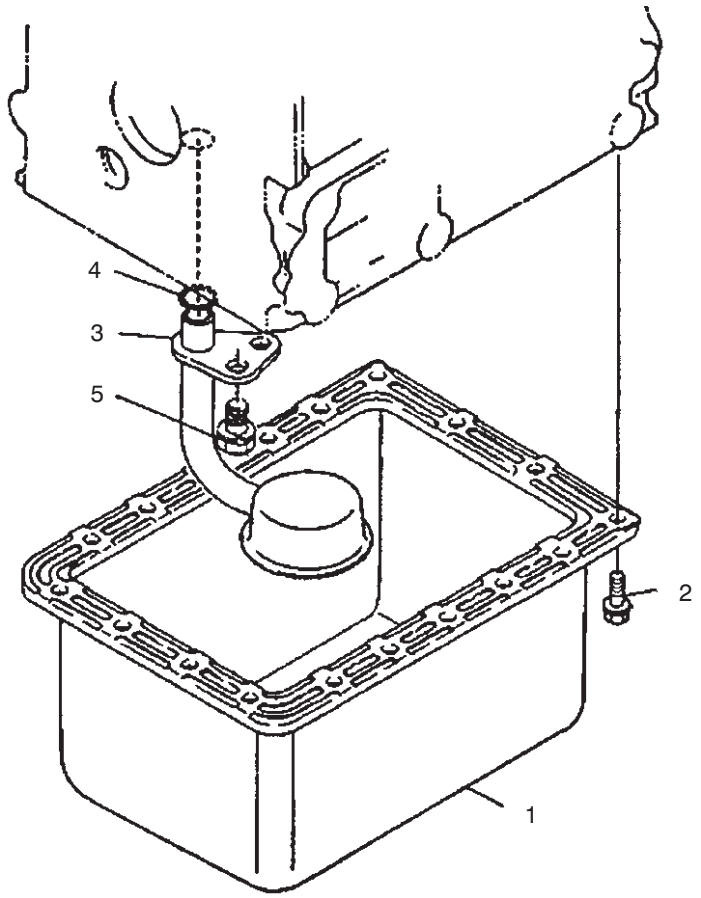

16682-002-10

Sheet No.:3

Oil Pan Assembly

Ref. No.	Part No.	Qty.	Description
1	100–2239	1	Pan–Oil, Comp,
2	98–9350	18	Bolt
3	100–2001	1	Strainer–Oil Internal
4	100–2205	1	O–Ring
5	98–7585	1	Bolt

Ref. No.	Part No.	Qty.	Description

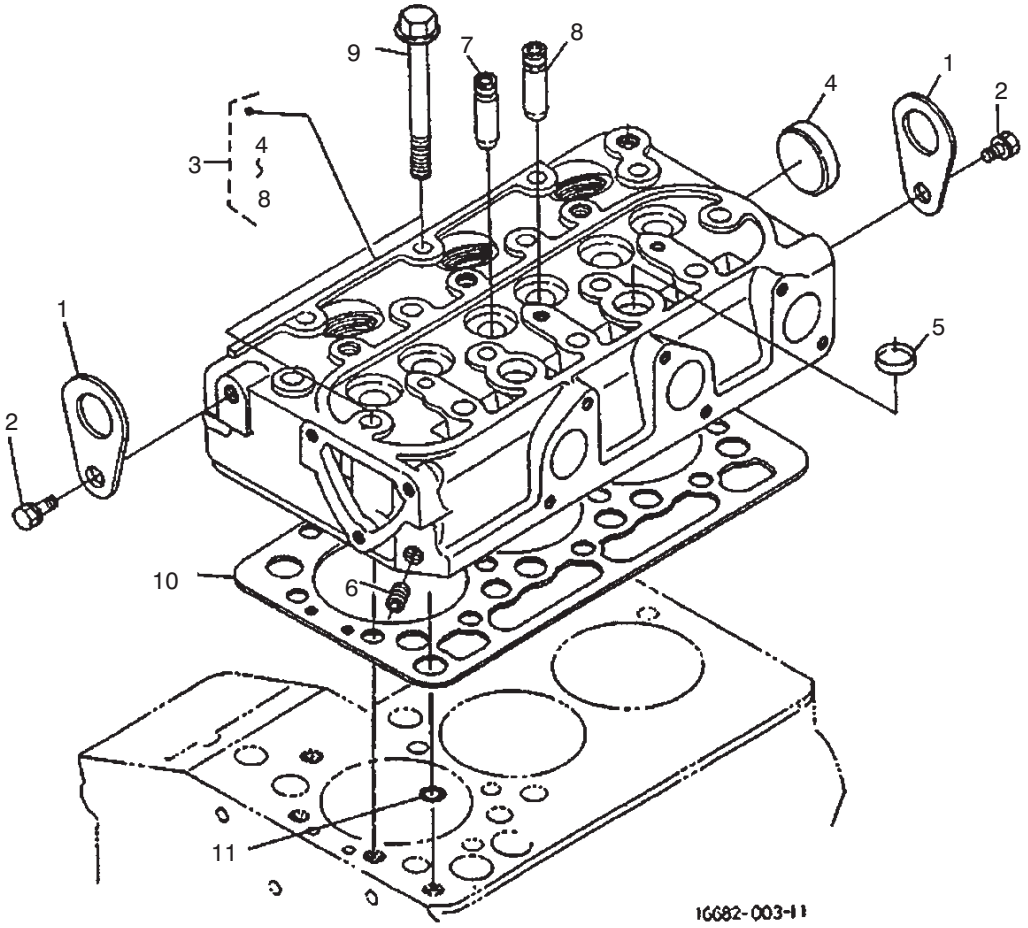

Sheet No.:4

Cylinder Head Assembly

Ref. No.	Part No.	Qty.	Description
1	98–7531	2	Engine–Hook
2	98–7526	2	Bolt
3	100–2246	1	Head–Cylinder, Comp.
4	98–9395	1	Cap–Sealing
5	98–9389	2	Cap–Sealing
6	98–7540	1	Cap–Sealing
7	100–1882	3	Guide–Valve, Inlet
8	100–1883	3	Guide–Valve, Exhaust
9	100–1820	14	Bolt–Head, Cylinder
10	100–2043	1	Gasket–Head, Cylinder
11	98–7509	1	O–Ring

Ref. No.	Part No.	Qty.	Description

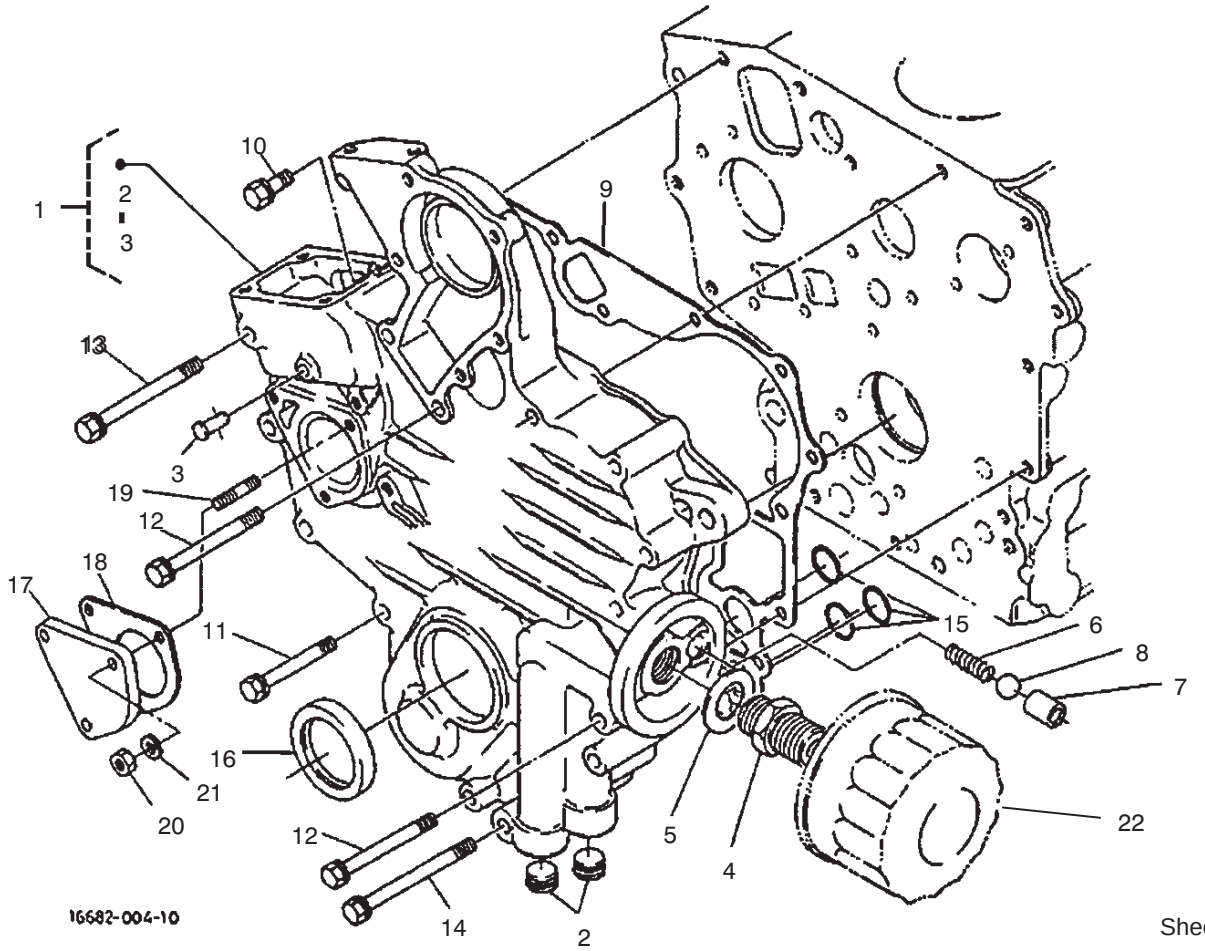

Sheet No.:5

Gear Case Assembly

Ref. No.	Part No.	Qty.	Description
1	100–2048	1	Case–Gear, Comp.
2	98–7546	2	Plug
3	100–1910	1	Pin–Spring, Start
4	98–9388	1	Pipe–Joint
5	100–1926	1	Washer–Plain
6	100–2004	1	Spring
7	100–1894	1	Seat–Valve
8	100–1792	1	Ball
9	100–1954	1	Gasket–Gearcase
10	98–7605	1	Bolt
11	100–2201	8	Bolt
12	100–1922	5	Bolt
13	100–1766	1	Bolt
14	100–1767	1	Bolt
15	100–2206	3	O–Ring
16	100–1971	1	Seat–Oil
17	100–2060	1	Cover
18	100–2061	1	Gasket–Gearcase, H/M
19	98–7571	3	Stud
20	98–7572	3	Nut
21	98–9367	3	Washer–Spring
22	100–1892	1	Cartridge–Filter, Oil

Ref. No.	Part No.	Qty.	Description

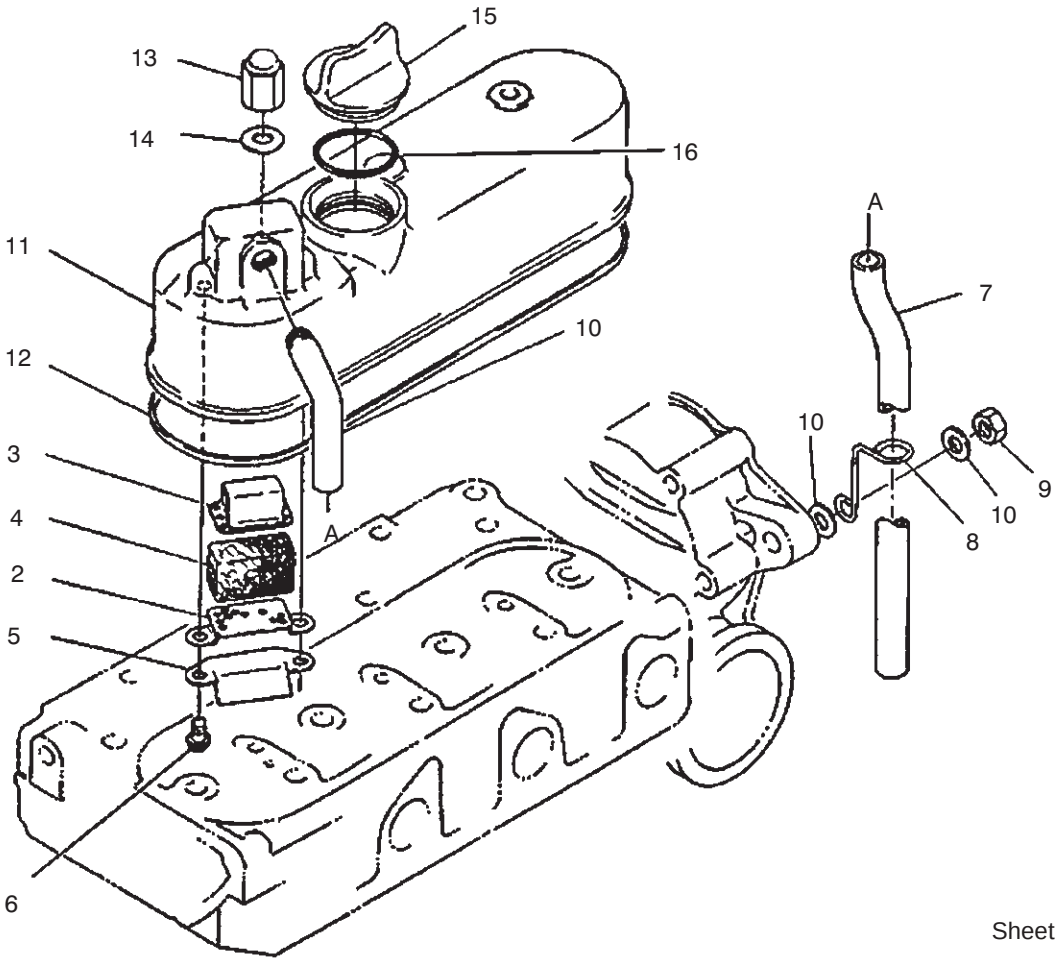

Sheet No.:6

Head Cover Assembly

Ref. No.	Part No.	Qty.	Description
1	100–1972	1	Joint–Pipe, Breather
2	100–1877	1	Plate–Element
3	100–1878	1	Plate–Element
4	100–1881	1	Element–Breather
5	100–1879	1	Breather–Shield, Oil
6	100–2040	2	Screw
7	100–1880	1	Pipe–Breather
8	100–1973	1	Clamp–Pipe
9	98–7739	1	Nut
10	98–7660	2	Washer–Plain
11	100–2029	1	Cover–Head, Cylinder
12	100–2030	1	Gasket–Cover, Head
13	98–7655	3	Nut–Cap
14	98–7654	3	Gasket
15	98–9449	1	Plug–Filler, Oil
16	99–3446	1	O–Ring

Ref. No.	Part No.	Qty.	Description

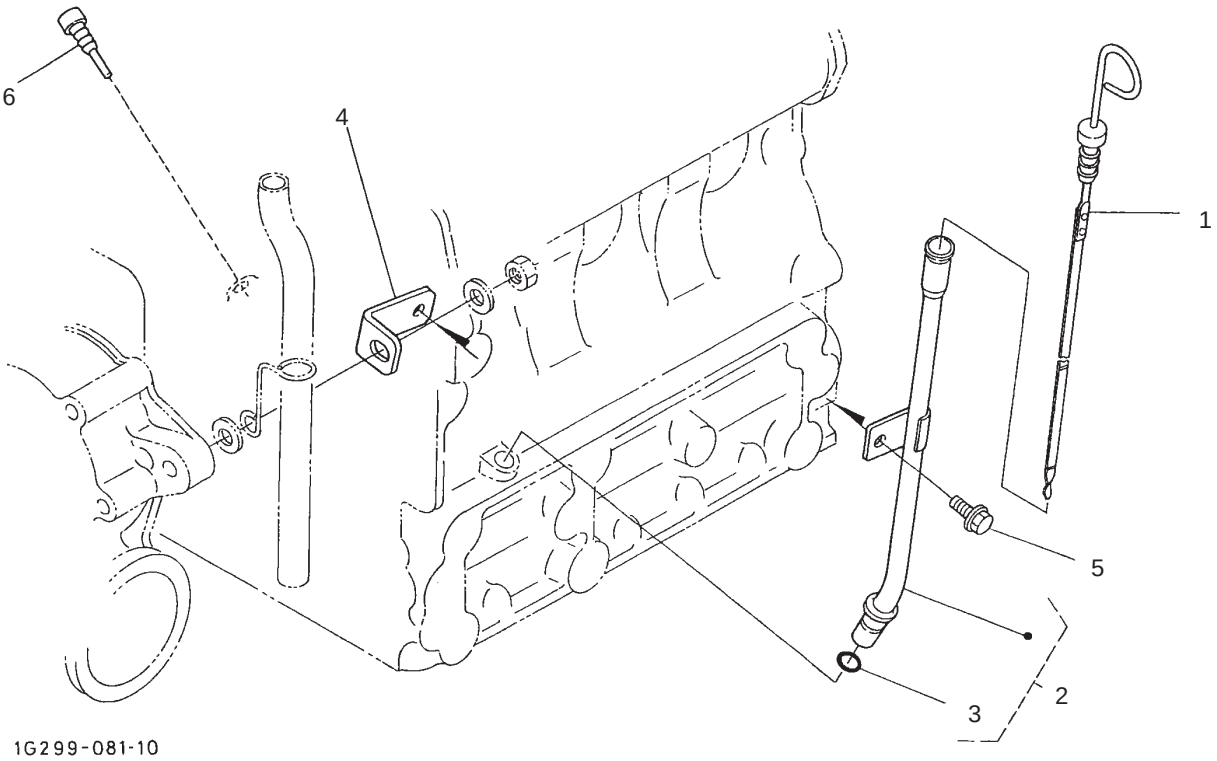

Sheet No.:7

Dipstick and Guide Assembly

Ref. No.	Part No.	Qty.	Description
1	100–2247	1	Gauge–Oil
2	100–2241	1	Oil Gauge Guide ASM
3	98–9374	1	O–Ring
4	100–2248	1	Support–Guide, Gauge
5	100–1774	1	Bolt–Flange
6	100–2229	1	Plug–Rubber

Ref. No.	Part No.	Qty.	Description

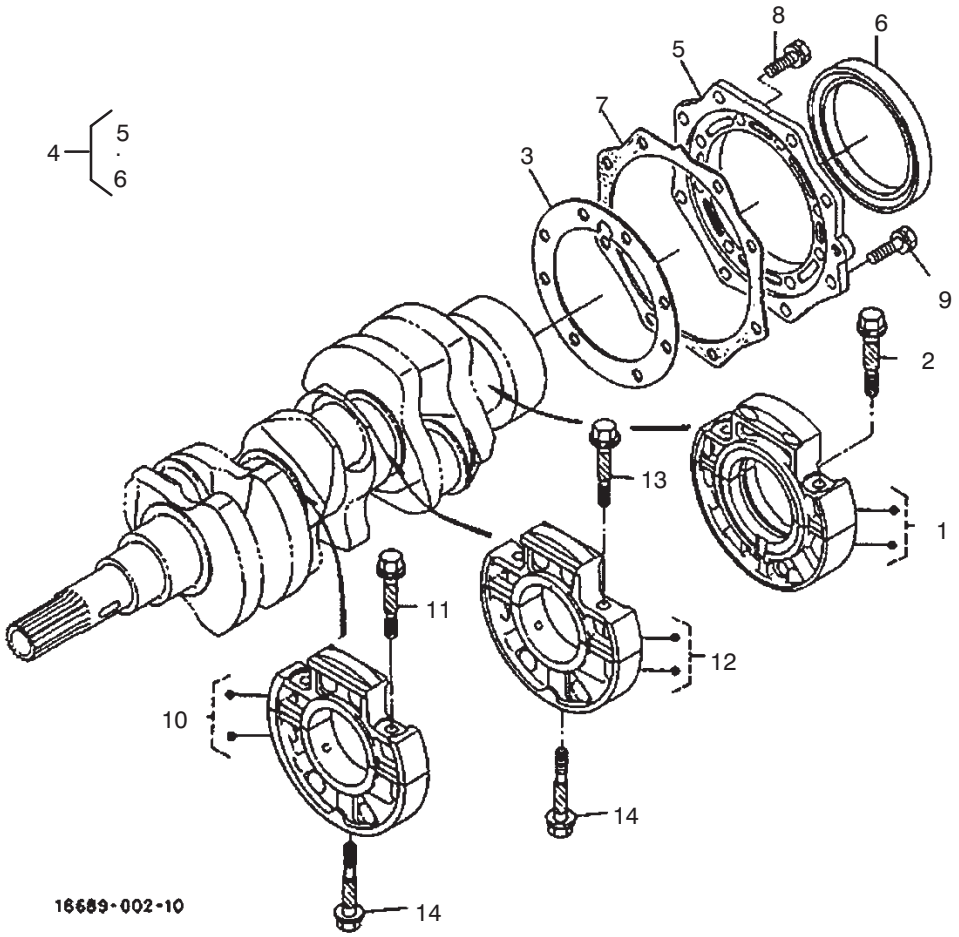

Sheet No.:8

Main Bearing Case Assembly

Ref. No.	Part No.	Qty.	Description
1	100–1988	1	Main Bearing Case ASM
2	100–1757	2	Bolt–Case, Bearing
3	100–1929	1	Gasket–Case, Bearing
4	100–2233	1	Bearing Case Cover ASM
5	100–1875	1	Cover–Case, Bearing
6	100–2055	1	Seal–Oil
7	100–1876	1	Gasket–Case, Bearing
8	98–7568	8	Bolt
9	100–1750	8	Bolt
10	100–1987	1	Main Bearing Case ASM
11	100–1757	2	Bolt–Case, Bearing
12	100–2027	1	Mian Bearing Case ASM
13	100–1757	2	Bolt–Case, Bearing
14	100–1874	2	Bolt–Case, Bearing

Ref. No.	Part No.	Qty.	Description

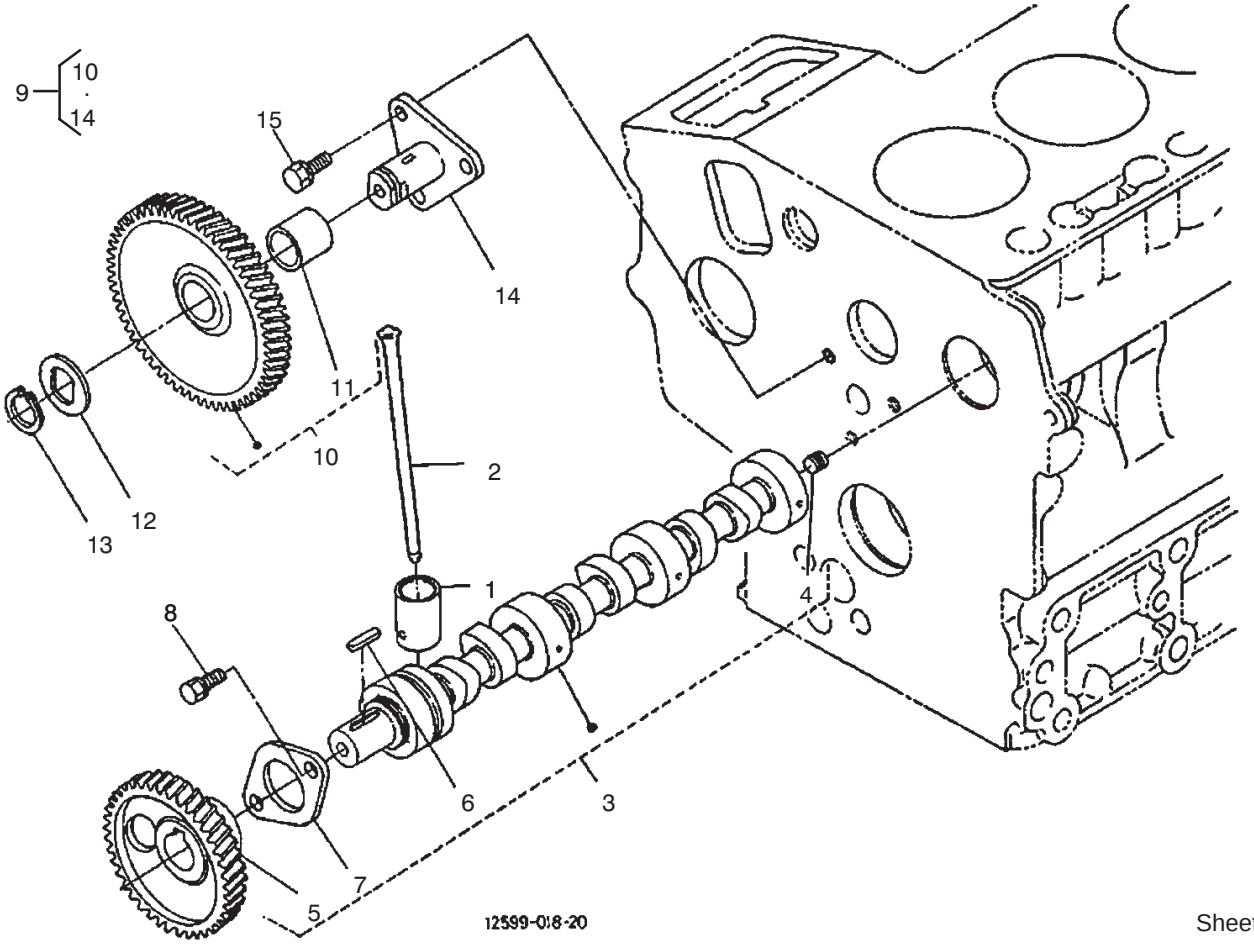

Sheet No.:9

Camshaft Assembly

Ref. No.	Part No.	Qty.	Description
1	100–1990	6	Tappet
2	100–1989	6	Rod–Push
3	100–2162	1	Camshaft ASM
4	98–7449	1	Screw–Set
5	100–2163	1	Gear–Camshaft
6	98–9378	1	Key–Feather
7	100–1887	1	Stopper–Camshaft
8	98–9350	2	Bolt
9	100–2240	1	Idle Gear ASM
10	100–1966	1	Gear–Idle, Comp.
11	100–1968	1	Bush
12	100–1970	1	Collar–Gear, Idle
13	100–1969	1	Ring–Snap
14	100–1967	1	Shaft–Gear, Idle
15	98–9351	3	Bolt

Ref. No.	Part No.	Qty.	Description

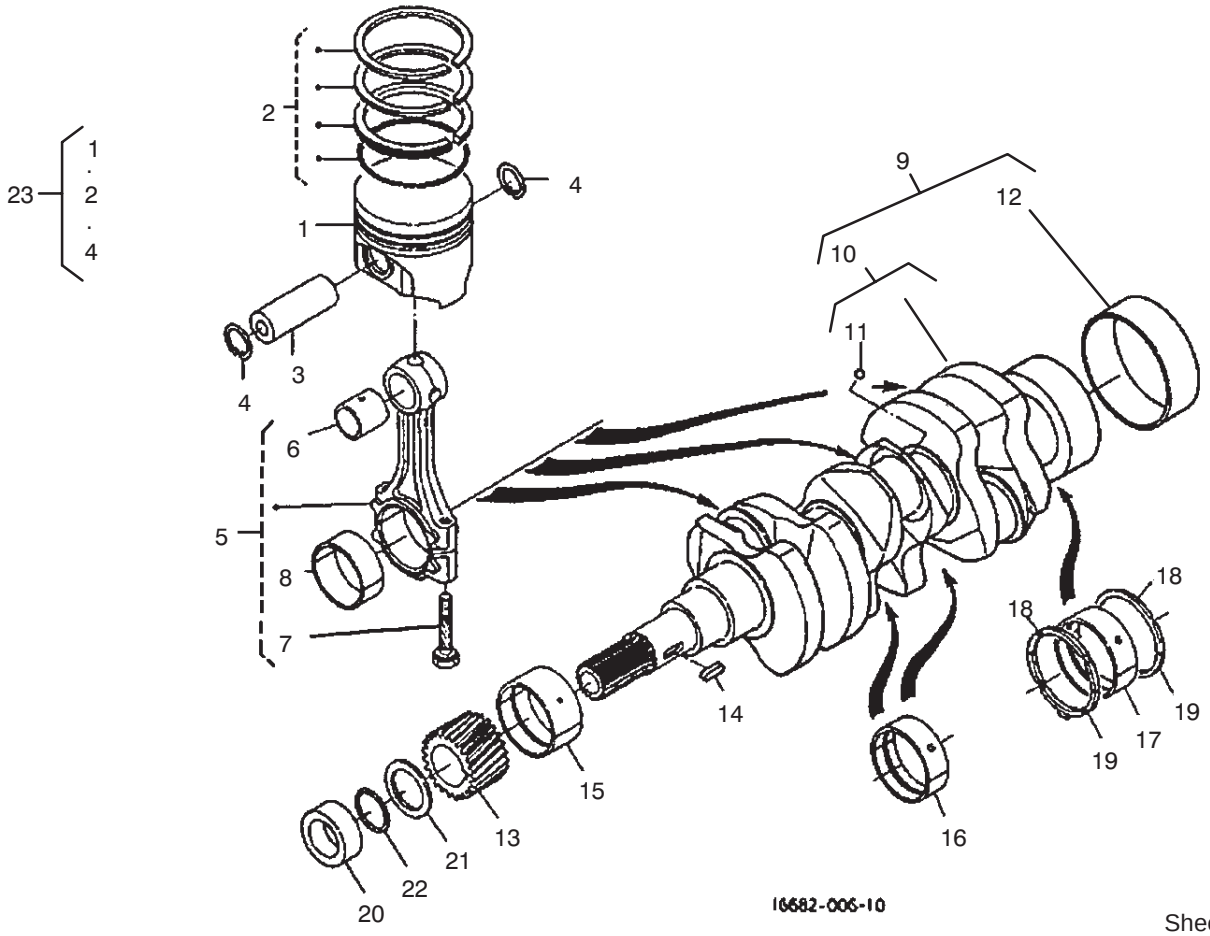

Sheet No.:10

Piston and Crankshaft Assembly

Ref. No.	Part No.	Qty.	Description
1	100–1994	3	Piston (STD.)
1	100–1996	3	Piston (+0.25 Mm)
2	100–2158	3	Piston Ring ASM
2	100–2159	3	Piston Ring ASM
3	100–1995	3	Pin–Piston
4	100–1835	6	Cir–Cup, Piston Pin
5	100–1998	3	Connecting Rod ASM
6	100–1997	3	Bush–Pin, Piston
7	100–1999	6	Bolt–Rod, Connecting
8	100–1942	3	Crankpin–Metal (–0.2 Mm)
8	100–1943	3	Crankpin–Metal (–0.4 Mm)
8	100–2000	3	Crankpin–Metal (STD.)
9	100–2161	1	Crankshaft ASM
10	100–2160	1	Crankshaft–Comp.
11	100–1791	3	Ball
12	100–2054	1	Sleeve–Crankshaft
13	100–1891	1	Gear–Crankshaft
14	100–1752	1	Key–Feather
15	100–1944	1	Crankshaft–Metal (STD.)
15	100–1947	1	Crankshaft–Metal (–0.2 Mm)
15	100–1948	1	Crankshaft–Metal (–0.4 Mm)

Ref. No.	Part No.	Qty.	Description
16	100–1945	2	Crankshaft–Metal (–0.2 Mm Set)
16	100–1946	2	Crankshaft–Metal (–0.4 Mm Set)
16	100–2033	2	Crankshaft–Metal (STD. Set)
17	100–1870	2	Crankshaft–Metal (–0.2 Mm)
17	100–1871	2	Crankshaft–Metal (–0.4 Mm)
17	100–2032	2	Crankshaft–Metal (STD.)
18	100–1836	2	Metal–Side (STD.)
18	100–1838	2	Metal–Side (+0.2 Mm)
18	100–1839	2	Metal–Side (+0.4 Mm)
19	100–1837	2	Metal–Side (STD.)
19	100–1840	2	Metal–Side (+2.0 Mm)
19	100–1841	2	Metal–Side (+4.0 Mm)
20	100–1890	1	Collar–Crankshaft
21	100–1974	1	Slinger–Oil
22	100–2209	1	O–Ring
23	100–2164	1	Kit–Piston

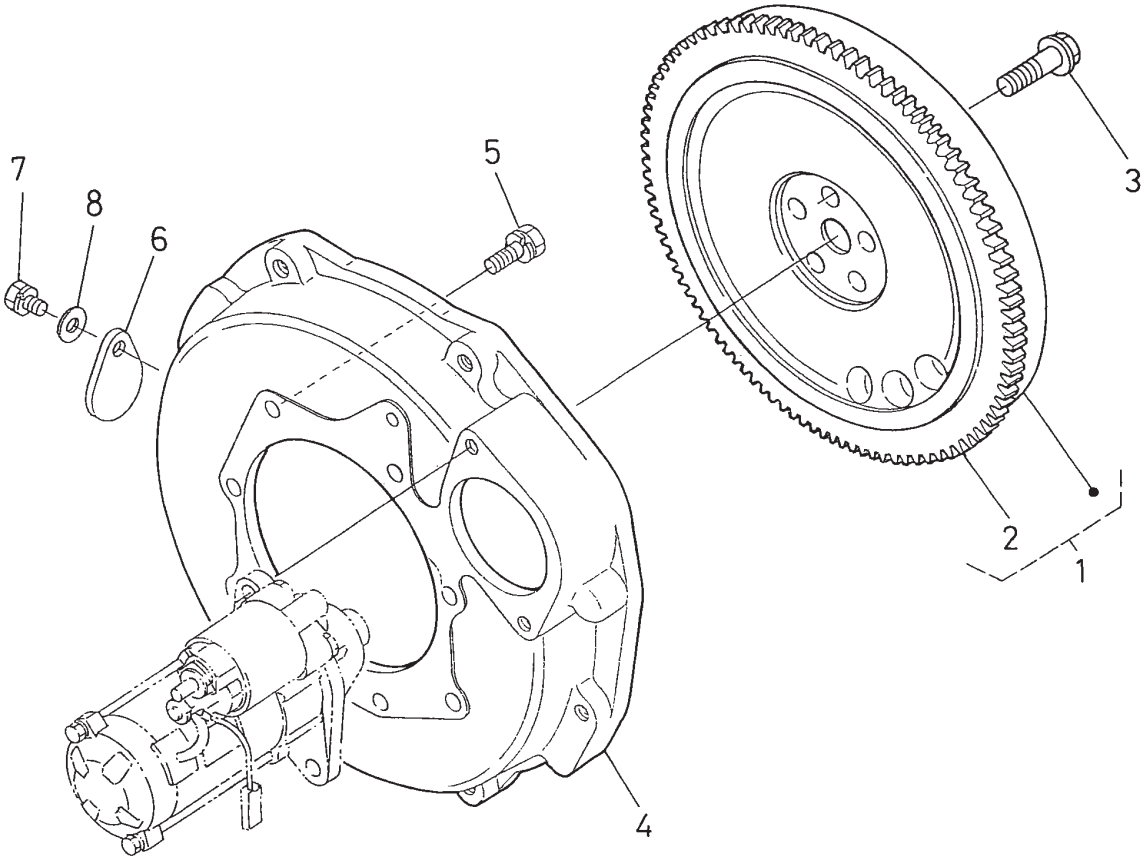

1G299-080-10

Sheet No.:11

Flywheel Assembly

Ref. No.	Part No.	Qty.	Description
1	100–2034	1	Flywheel–Comp.
2	100–2156	1	Gear–Ring
3	100–1930	5	Bolt–Flywheel
4	100–2234	1	Plate–End, Rear
5	98–9359	10	Bolt
6	100–2177	1	Cover
7	98–7585	1	Bolt
8	98–7660	1	Washer–Plain

Ref. No.	Part No.	Qty.	Description

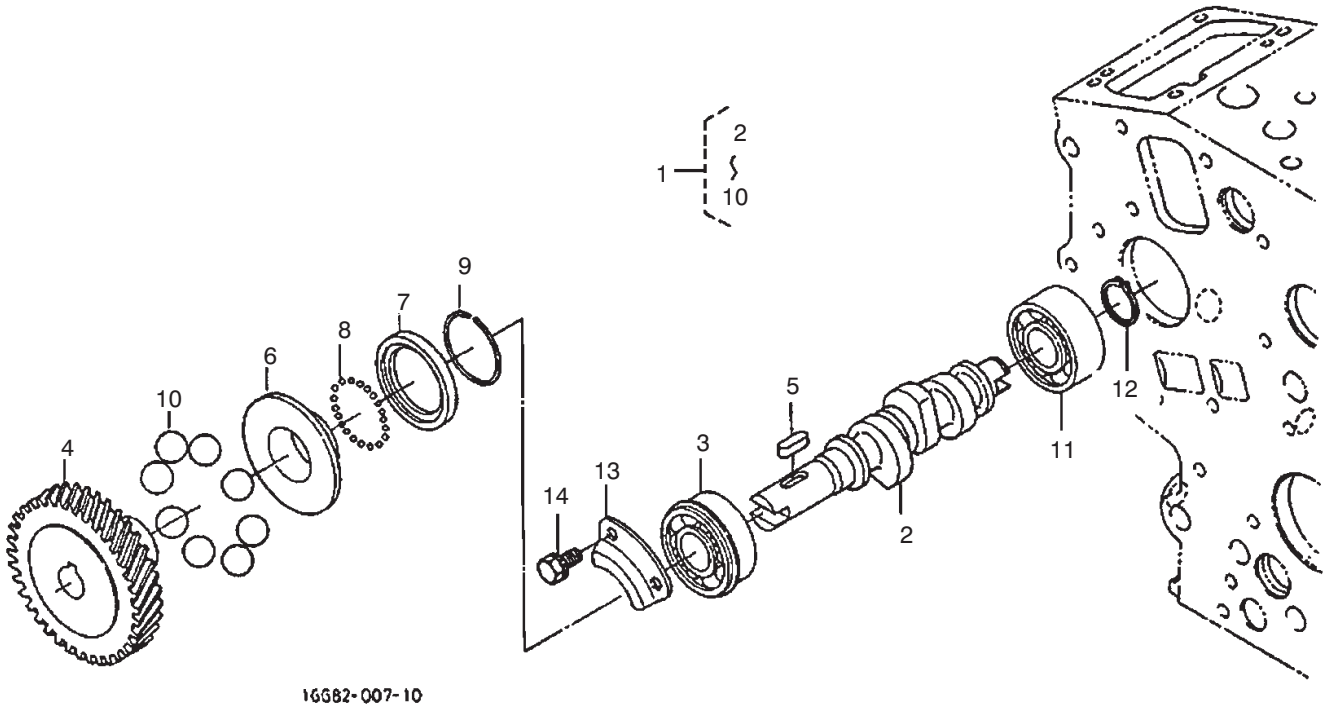

Sheet No.:12

Fuel Camshaft Assembly

Ref. No.	Part No.	Qty.	Description
1	100–2031	1	Fuel Camshaft ASM
2	100–1965	1	Camshaft
3	100–1795	1	Bearing–Ball
4	100–2006	1	Gear–Pump, Injection
5	100–1752	1	Key,Feather
6	100–1903	1	Sleeve–Governor
7	100–1904	1	Case–Ball, Governor
8	100–1790	32	Ball
9	100–1843	1	Cir–Clip, Gov. Sleeve
10	100–1793	8	Ball
11	100–1794	1	Bearing–Ball
12	100–1784	1	Cir–Clip, External
13	100–1888	1	Stopper–Fuel, C/Shaft
14	98–9350	2	Bolt

Ref. No.	Part No.	Qty.	Description

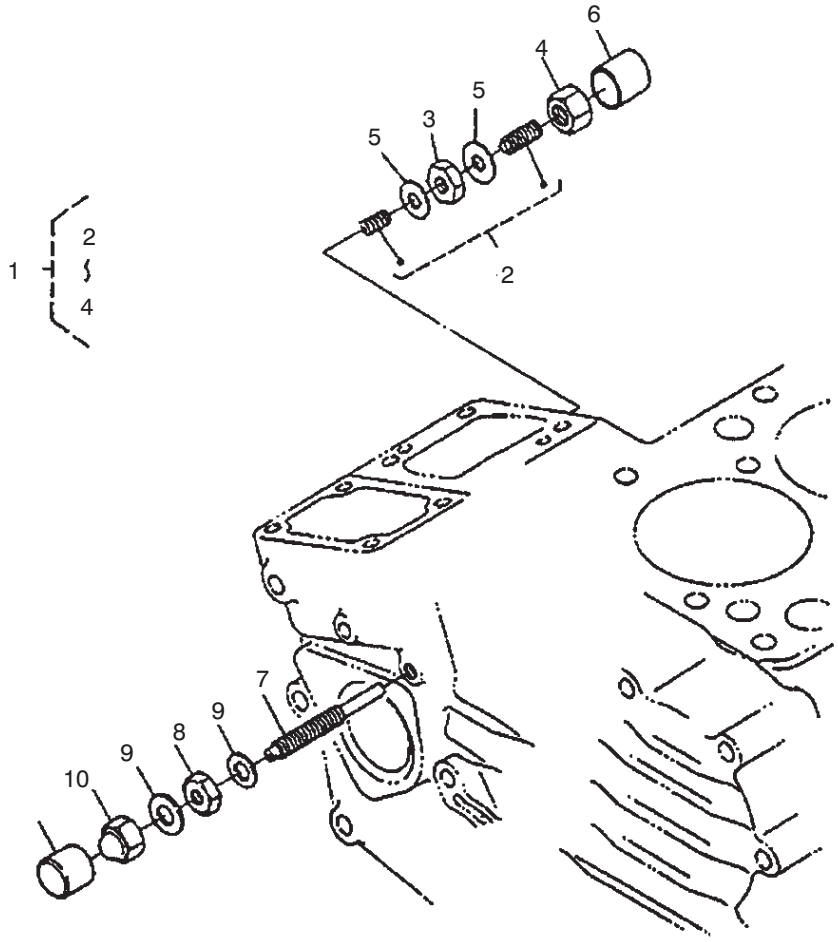

Sheet No.:13

Engine Stop Lever Assembly

Ref. No.	Part No.	Qty.	Description
1	100–1898	1	Idle Apparatus ASM
2	100–1899	1	Adj. Bolt ASM
3	100–1846	1	Nut
4	100–1901	1	Nut–Cap
5	98–7428	2	Gasket
6	100–1902	1	Cap
7	100–1900	1	Bolt–Adjusting
8	100–2175	1	Nut–Lock
9	98–7654	2	Gasket
10	98–9441	1	Nut–Cap

Ref. No.	Part No.	Qty.	Description

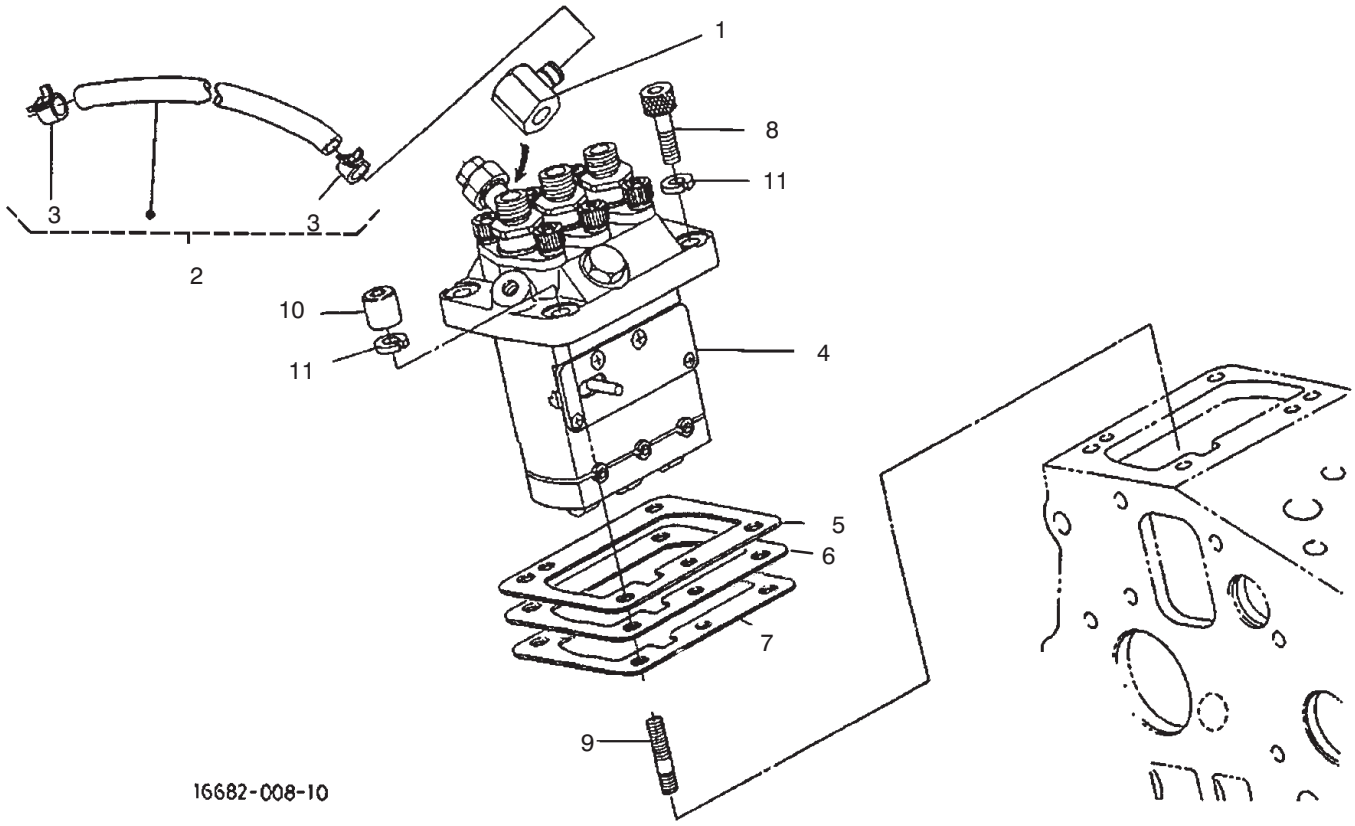

Sheet No.:14

Injection Pump Assembly

Ref. No.	Part No.	Qty.	Description
1	100–1928	1	Joint–Eye
2	100–1842	1	Fuel Pipe ASM
3	100–2217	2	Clip–Pipe
4	100–1759	1	Inj. Pump ASM
5	98–9456	1	Shim
6	98–9457	1	Shim–Injection (0.25mm)
7	98–9458	1	Shim–Injection (0.30mm)
8	98–9361	2	Bolt–HSH
9	98–9438	2	Stud
10	98–9440	2	Nut,–Cap
11	98–9367	4	Washer–Spring

Ref. No.	Part No.	Qty.	Description

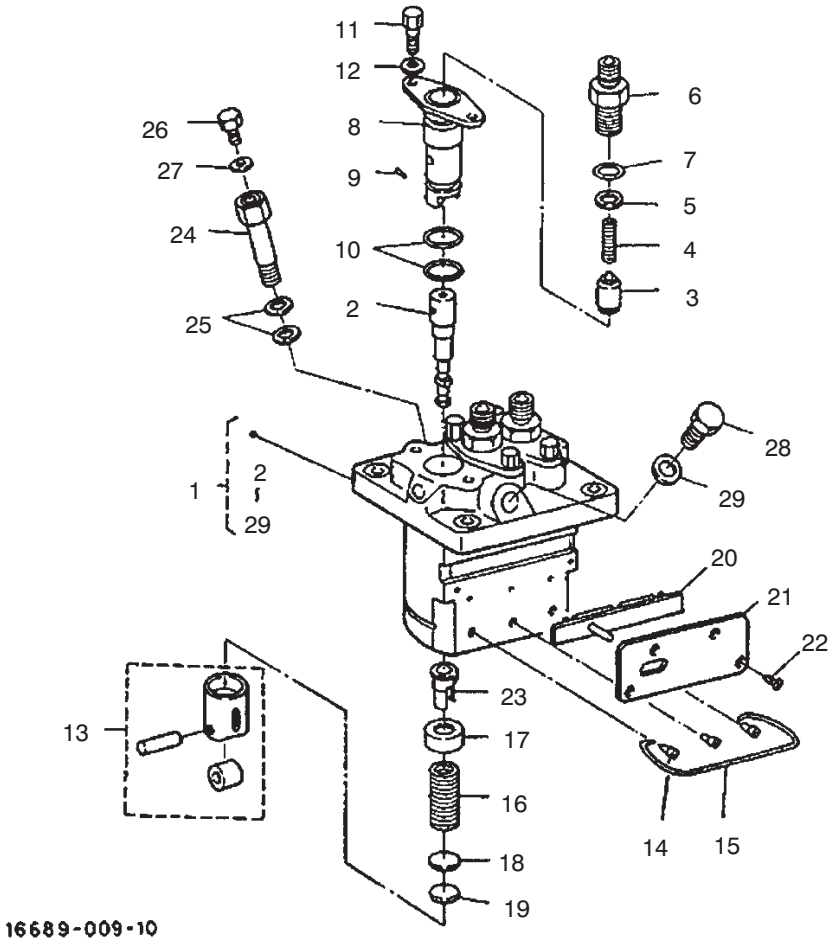

Sheet No.:15

Injection Pump (Complete Parts)

Ref. No.	Part No.	Qty.	Description
1	100–1759	1	Inj. Pump ASM
2	100–2005	3	Plunger–Pump
3	98–9421	3	Valve–Delivery
4	98–9424	3	Spring–Valve, Delev.
5	98–9425	3	Gasket–Valve, Deliv.
6	100–2007	3	Holder–Valve, Deliv.
7	98–9447	3	O–Ring
8	98–9434	3	Flange–Sleeve
9	98–9443	3	Pin–Joint
10	100–1895	6	O–Ring
11	98–9452	6	Screw
12	100–1931	6	Washer
13	98–9422	3	Tappet ASM
14	98–9426	3	Pin–Guide, Tappet
15	98–9450	1	Pin–Clamp
16	98–9428	3	Spring–Plunger
17	98–9427	3	Seat–Spring, Upper
18	98–9429	3	Seat–Spring, Lower
19	98–9433	1	Shim
20	100–1949	1	Rack–Control
21	100–1950	1	Plate
22	98–9442	4	Screw–Head, CSK
23	98–9432	3	Sleeve–Control
24	100–1896	1	Screw–Hollow
25	98–9445	2	Gasket
26	98–9430	1	Screw

Ref. No.	Part No.	Qty.	Description
27	98–9446	1	Gasket
28	100–1953	1	Bolt
29	98–9451	1	Gasket

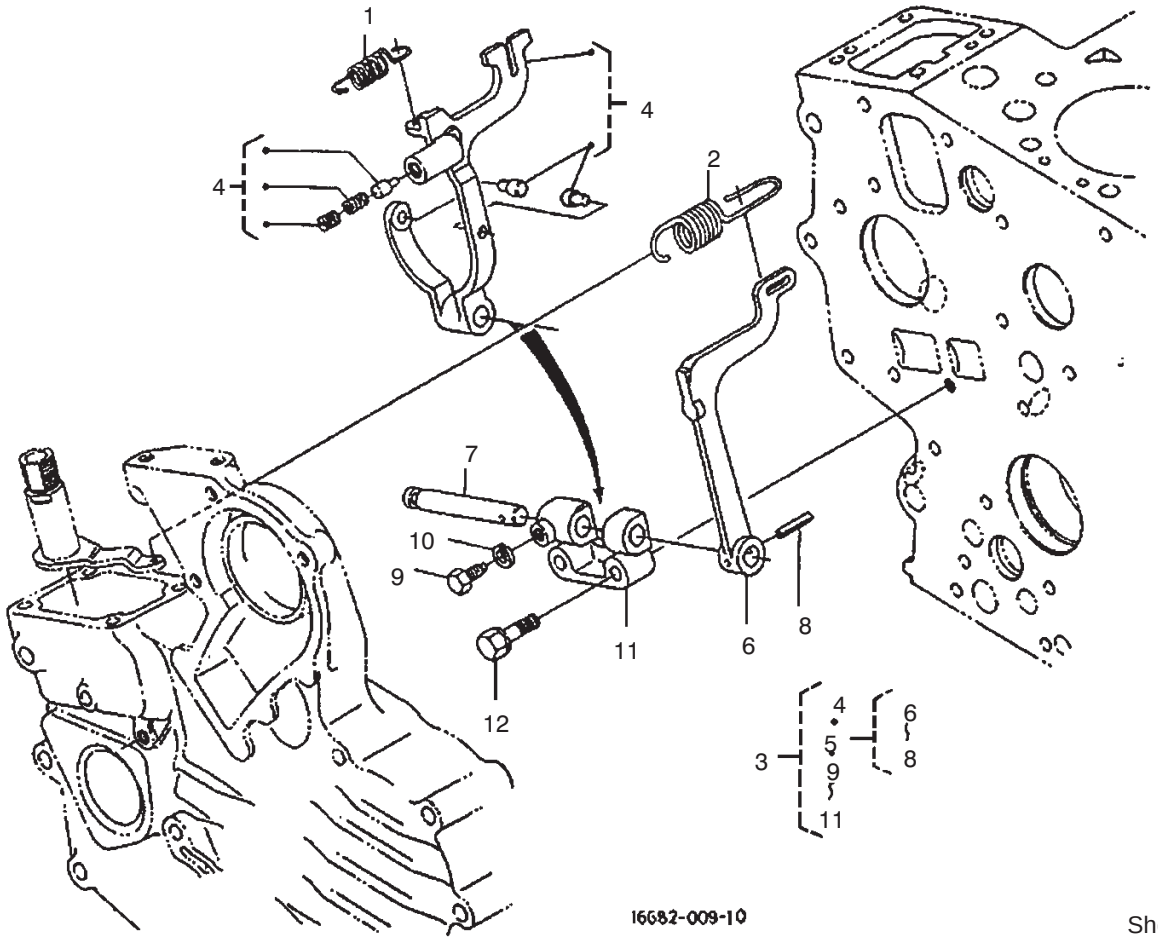

Sheet No.:16

Governor Assembly

Ref. No.	Part No.	Qty.	Description
1	100–1911	1	Spring–Start
2	100–2059	1	Spring, Governor
3	100–1981	1	Assy Lever, Fork
4	100–2241	1	Lever–Fork, Comp.
5	100–1905	1	Fork Lever ASM
6	100–1907	1	Lever, Fork
7	100–1908	1	Shaft, Fork Lever
8	100–1751	1	Pin, Spring
9	100–1845	1	Bolt
10	100–2204	1	Washer–Spring
11	100–1909	1	Holder, Fork Lever
12	100–1763	2	Bolt

Ref. No.	Part No.	Qty.	Description

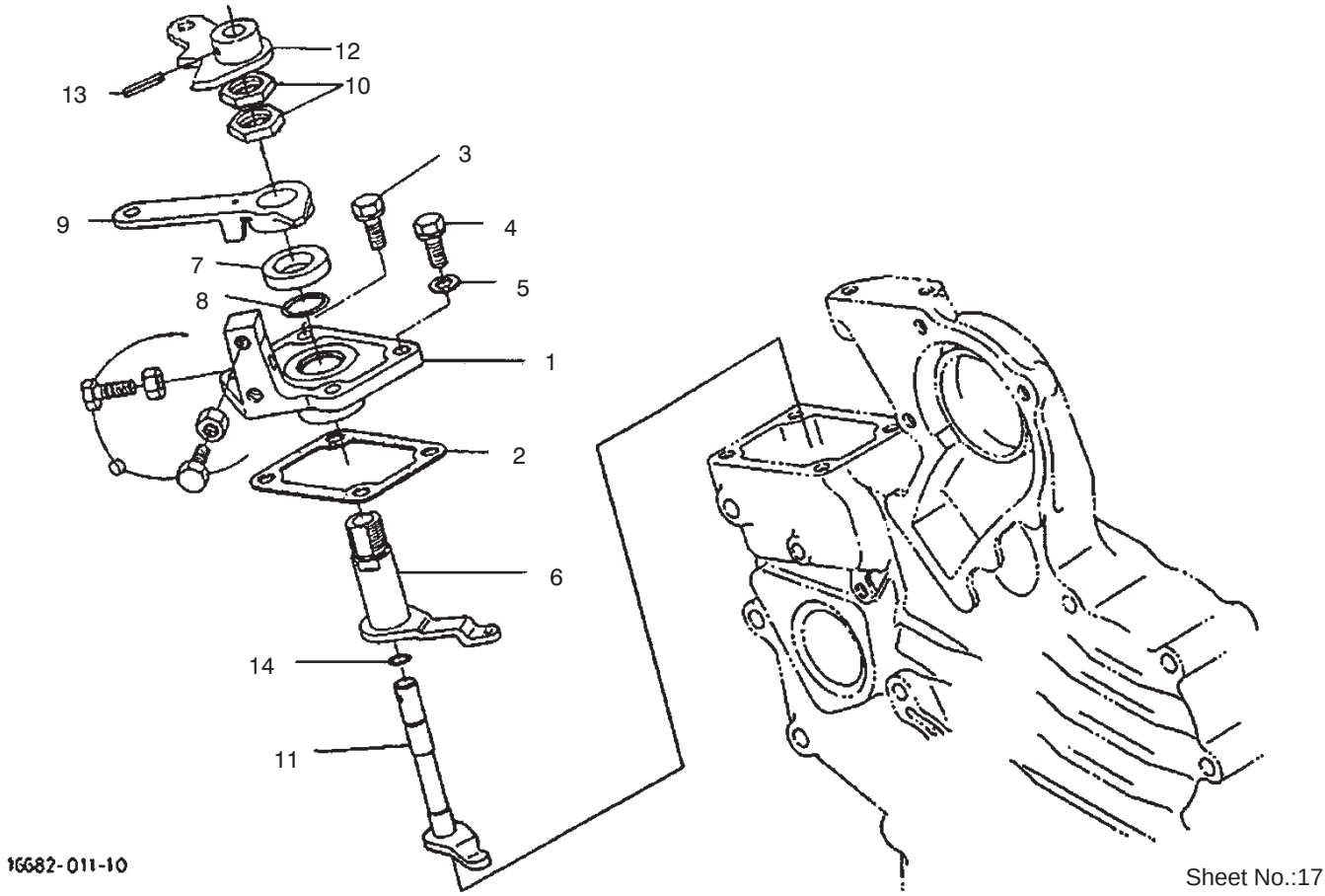

Sheet No.:17

Speed Control Plate Assembly

Ref. No.	Part No.	Qty.	Description
1	100–1912	1	Plate–Cont., Speed
2	100–1914	1	Gasket
3	98–7605	2	Bolt
4	100–1769	2	Bolt
5	98–7654	2	Gasket
6	100–2172	1	Lever–Governor
7	100–1915	1	Collar
8	100–2208	1	O–Ring
9	100–1986	1	Lever–Cont., Speed
10	100–1925	2	Nut
11	100–2050	1	Shaft–Lever
12	100–2173	1	Lever–Stop, Engine
13	100–1751	1	Pin–Spring
14	100–2207	1	O–Ring

Ref. No.	Part No.	Qty.	Description

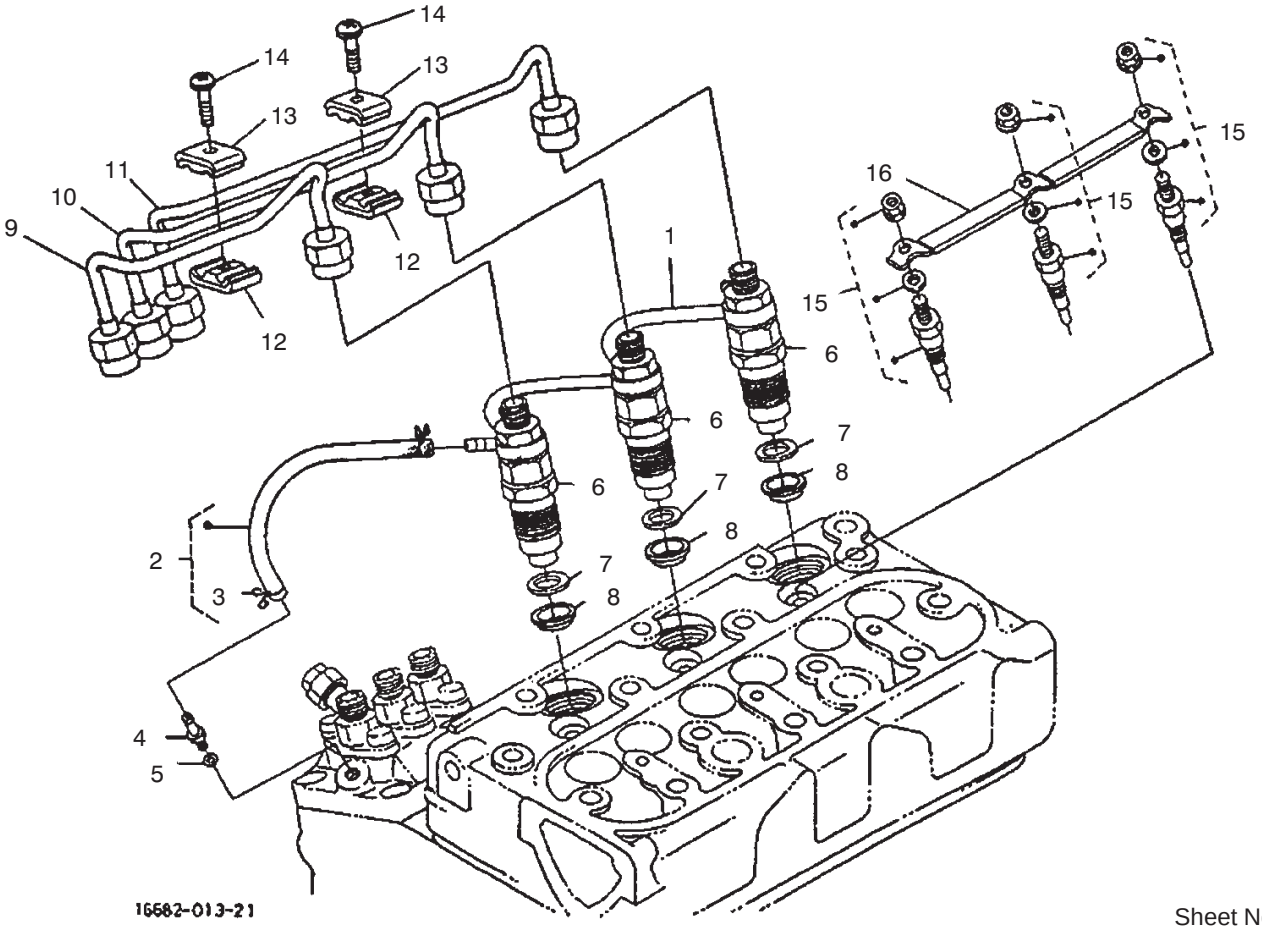

Sheet No.:18

Nozzle Holder and Glow Plugs Assembly

Ref. No.	Part No.	Qty.	Description
1	100–1960	1	Over Flow Pipe ASM
2	98–9420	1	Over Flow Pipe ASM
3	98–7671	2	Clip–Pipe
4	98–9431	1	Screw–Bleeder, Air
5	98–7654	1	Gasket
6	100–1758	3	Nozzle Holder ASM
7	98–7676	3	Gasket
8	98–7677	3	Seal
9	100–2011	1	Pipe–Injection
10	100–2013	1	Pipe–Injection
11	100–2036	1	Pipe–Injection
12	98–7682	2	Clamp–Pipe
13	98–7683	2	Clamp–Pipe
14	98–7684	2	Screw,w/Washer
15	100–1854	3	Plug–Glow
16	100–2037	1	Cord–Plug, Glow

Ref. No.	Part No.	Qty.	Description

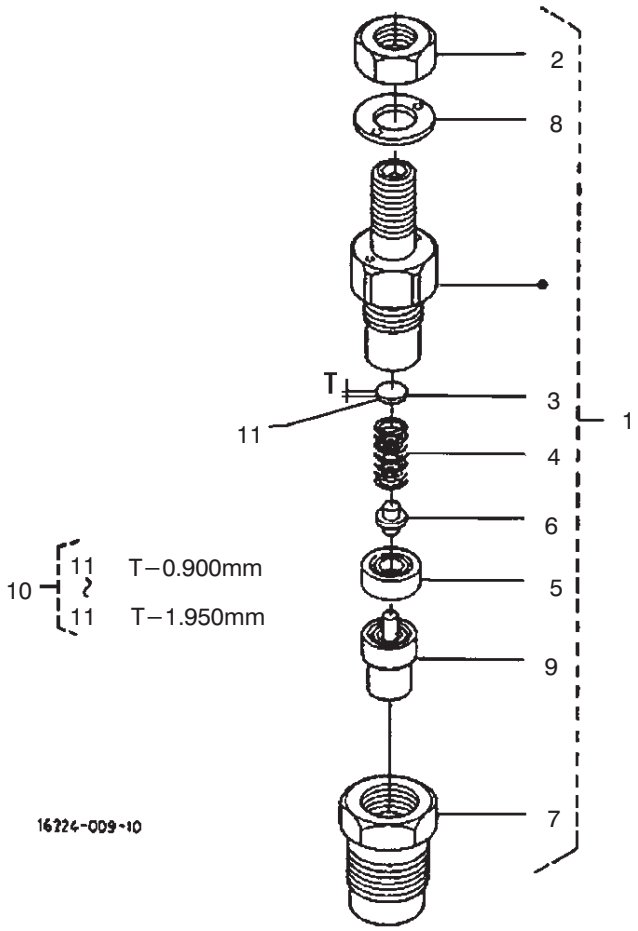

Sheet No.:19

Nozzle Holder (Complete Parts)

Ref. No.	Part No.	Qty.	Description
1	100–1758	3	Nozzle Holder ASM
2	98–7613	3	Nut
3	98–7642	3	Washer–Adjusting
4	98–7647	3	Spring–Nozzle
5	98–7665	3	Piece–Distant
6	98–7666	3	Rod–Push
7	100–2242	3	Nut–Nozzle
8	98–7668	3	Washer
9	100–2009	3	Piece–Nozzle
10	98–9448	1	Adj Washer ASM
11	98–7642	1	Washer – Adj. (.900)
11	98–7841	1	Washer – Adj. (.925)
11	98–7842	1	Washer – Adj. (.950)
11	98–7843	1	Washer – Adj. (.975)
11	98–7844	1	Washer – Adj. (1.000)
11	98–7845	1	Washer – Adj. (1.025)
11	98–7846	1	Washer – Adj. (1.050)
11	98–7847	1	Washer – Adj. (1.075)
11	98–7848	1	Washer – Adj. (1.100)
11	98–7849	1	Washer – Adj. (1.125)
11	98–7850	1	Washer – Adj. (1.150)
11	98–7851	1	Washer – Adj. (1.175)
11	98–7852	1	Washer – Adj. (1.200)
11	98–7853	1	Washer – Adj. (1.225)
11	98–7854	1	Washer – Adj. (1.250)
11	98–7855	1	Washer – Adj. (1.275)

Ref. No.	Part No.	Qty.	Description
11	98–7856	1	Washer – Adj. (1.300)
11	98–7857	1	Washer – Adj. (1.325)
11	98–7858	1	Washer – Adj. (1.350)
11	98–7859	1	Washer – Adj. (1.375)
11	98–7860	1	Washer – Adj. (1.400)
11	98–7861	1	Washer – Adj. (1.425)
11	98–7862	1	Washer – Adj. (1.450)
11	98–7863	1	Washer – Adj. (1.475)
11	98–7864	1	Washer – Adj. (1.500)
11	98–7865	1	Washer – Adj. (1.525)
11	98–7866	1	Washer – Adj. (1.550)
11	98–7867	1	Washer – Adj. (1.575)
11	98–7868	1	Washer – Adj. (1.600)
11	98–7869	1	Washer – Adj. (1.625)
11	98–7870	1	Washer – Adj. (1.650)
11	98–7871	1	Washer – Adj. (1.675)
11	98–7872	1	Washer – Adj. (1.700)
11	98–7873	1	Washer – Adj. (1.725)
11	98–7874	1	Washer – Adj. (1.750)
11	98–7875	1	Washer – Adj. (1.775)
11	98–7876	1	Washer – Adj. (1.800)

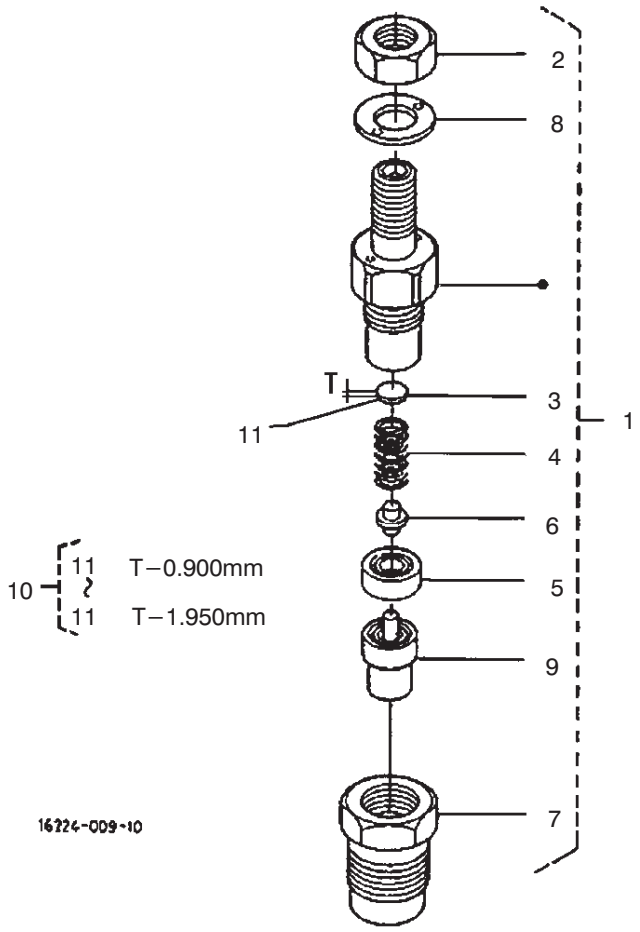

Sheet No.:19

Nozzle Holder (Complete Parts Continued)

Ref. No.	Part No.	Qty.	Description
11	98–7877	1	Washer – Adj. (1.825)
11	98–7878	1	Washer – Adj. (1.850)
11	98–7879	1	Washer – Adj. (1.875)
11	98–7880	1	Washer – Adj. (1.900)
11	98–7881	1	Washer – Adj. (1.925)
11	98–7882	1	Washer – Adj. (1.950)

Ref. No.	Part No.	Qty.	Description

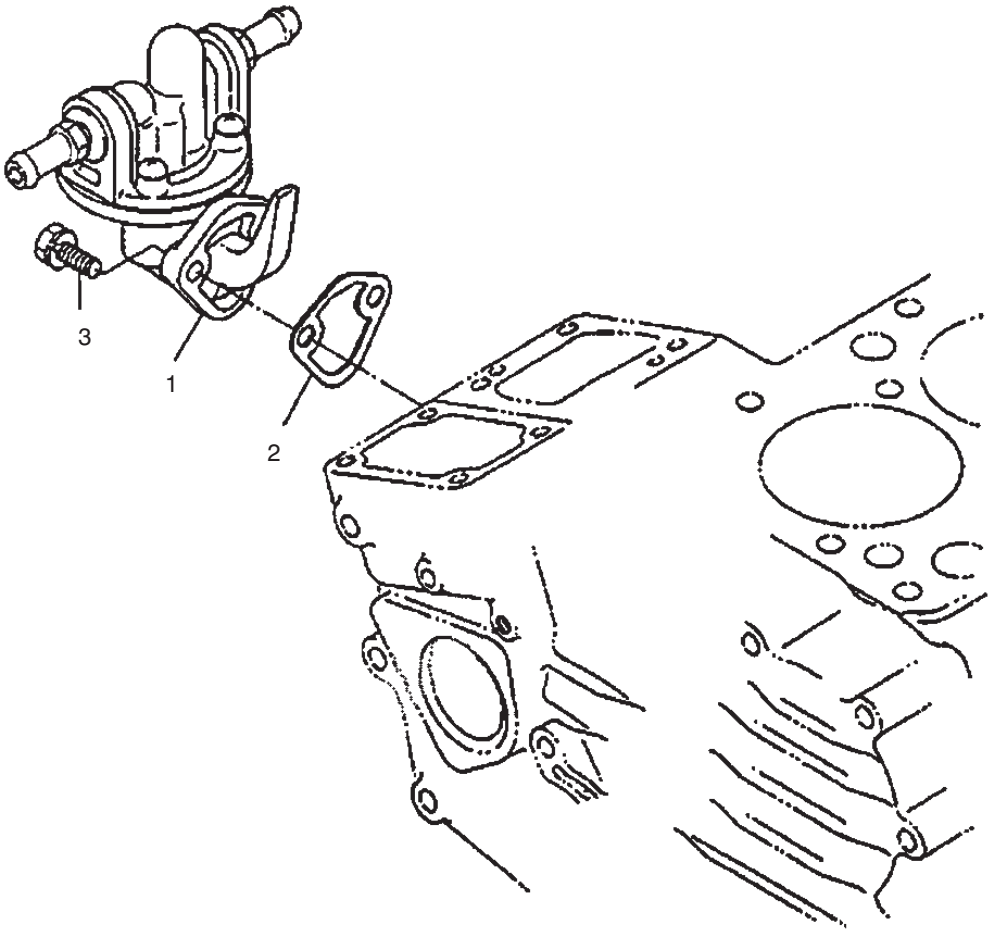

Sheet No.:20

Fuel Pump (Mechanical)

Ref. No.	Part No.	Qty.	Description
1	100–2232	1	Fuel Pump ASM
2	98–9636	1	Gasket–Pump, Fuel
3	98–7692	2	Bolt

Ref. No.	Part No.	Qty.	Description

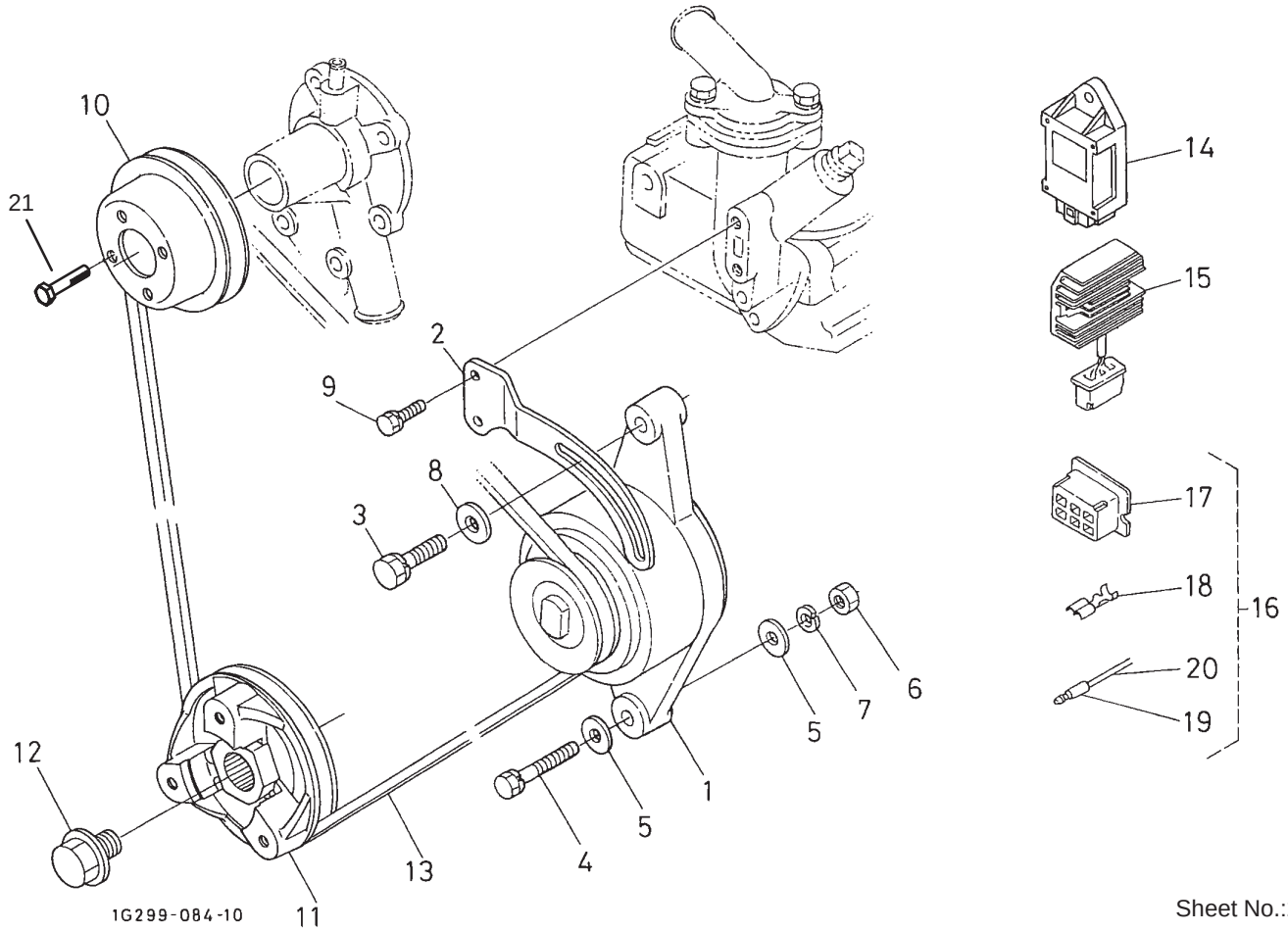

Sheet No.:21

Dynamo and Pulley Assembly

Ref. No.	Part No.	Qty.	Description
1	100–2168	1	Dynamo ASM
2	100–2214	1	Stay–Dynamo
3	98–7697	1	Bolt
4	100–1771	1	Bolt
5	98–7660	2	Washer–Plain
6	98–7739	1	Nut
7	98–7535	1	Washer–Spring
8	100–1782	1	Washer–Plain
9	98–7692	2	Bolt
10	100–1921	1	Pulley–Fan
11	100–2039	1	Pulley–Drive, Fan
12	100–1978	1	Bolt
13	100–1979	1	V–Belt
14	98–7611	1	Controller–Glow, F/W
15	100–2057	1	Regulator ASM
16	100–2058	1	Coupler ASM
17	100–2056	1	Connector
18	98–9699	6	Terminal
19	98–9701	2	Terminal
20	98–9702	2	Sleeve
21	100–1773	4	Bolt–Flange

Ref. No.	Part No.	Qty.	Description

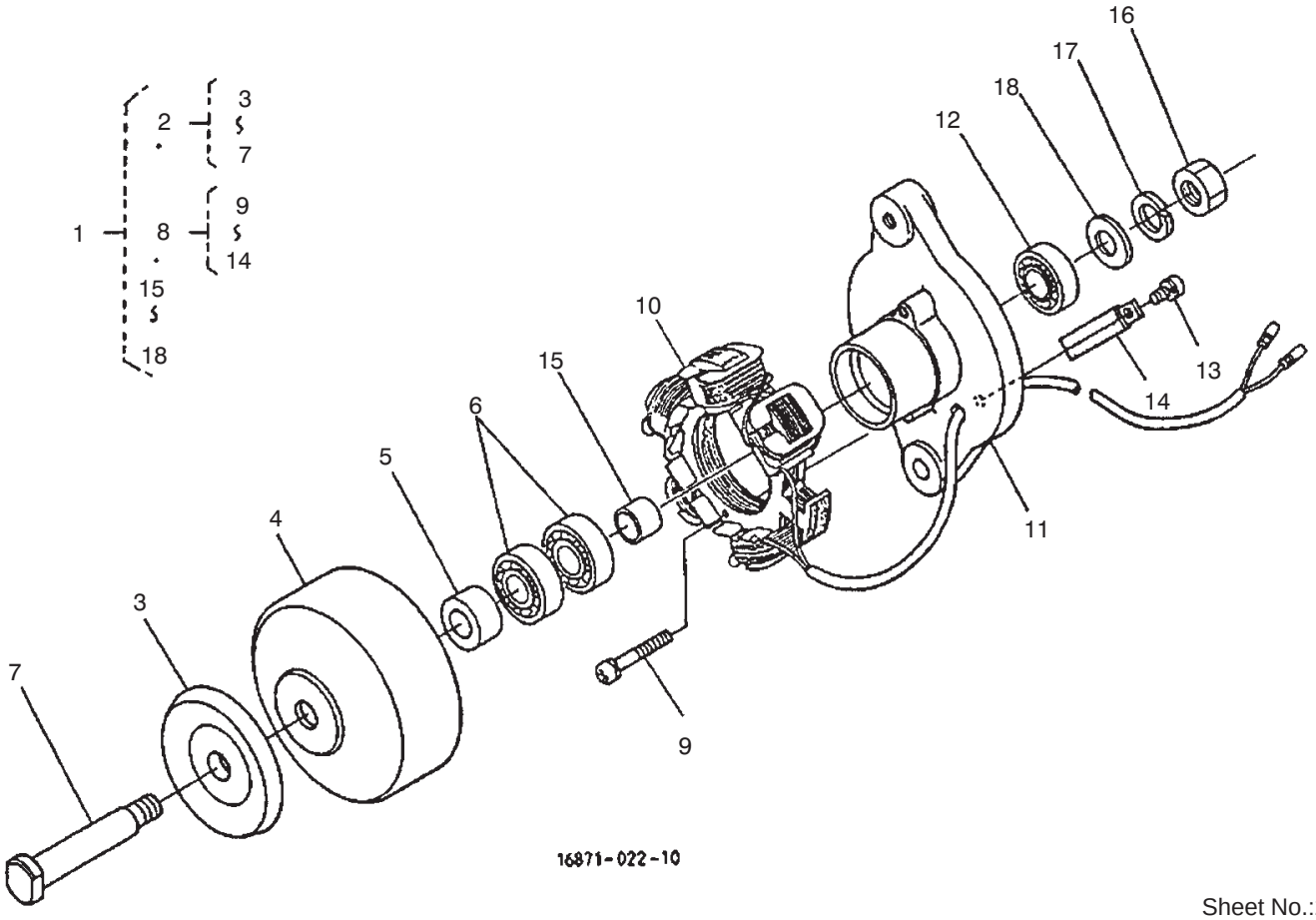

Sheet No.:22

Dynamo (Complete Parts)

Ref. No.	Part No.	Qty.	Description
1	100–2168	1	Dynamo ASM
2	100–1862	1	Rotor–Comp.
3	100–2228	1	Pulley
4	100–1860	1	Rotor
5	100–2184	1	Collar
6	100–1756	2	Bearing–Ball
7	100–1867	1	Shaft–Fan
8	100–1866	1	Stator–Comp.
9	100–1848	2	Screw–Head, Round
10	100–1865	1	Stator
11	100–1861	1	Plate
12	100–1756	1	Bearing–Ball
13	100–1868	1	Screw–Head, Round
14	100–1864	1	Clamp–Cord
15	100–1844	1	Collar
16	100–1847	1	Nut
17	100–1850	1	Washer–Spring
18	100–1849	1	Washer–Plain

Ref. No.	Part No.	Qty.	Description

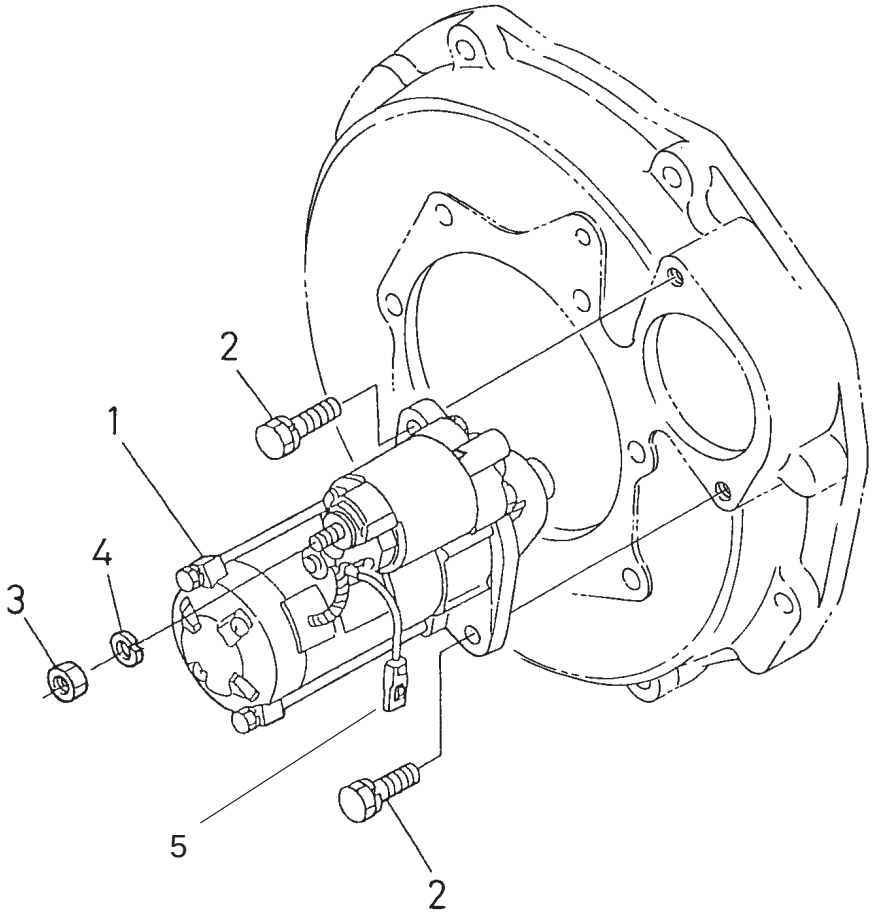

1G299-085-10

Sheet No.:23

Starter Assembly

Ref. No.	Part No.	Qty.	Description
1	100–2179	1	Starter ASM
2	100–7438	2	Bolt
3	98–7739	1	Nut
4	98–7535	1	Washer–Spring
5	99–1434	1	Wire–Lead

Ref. No.	Part No.	Qty.	Description

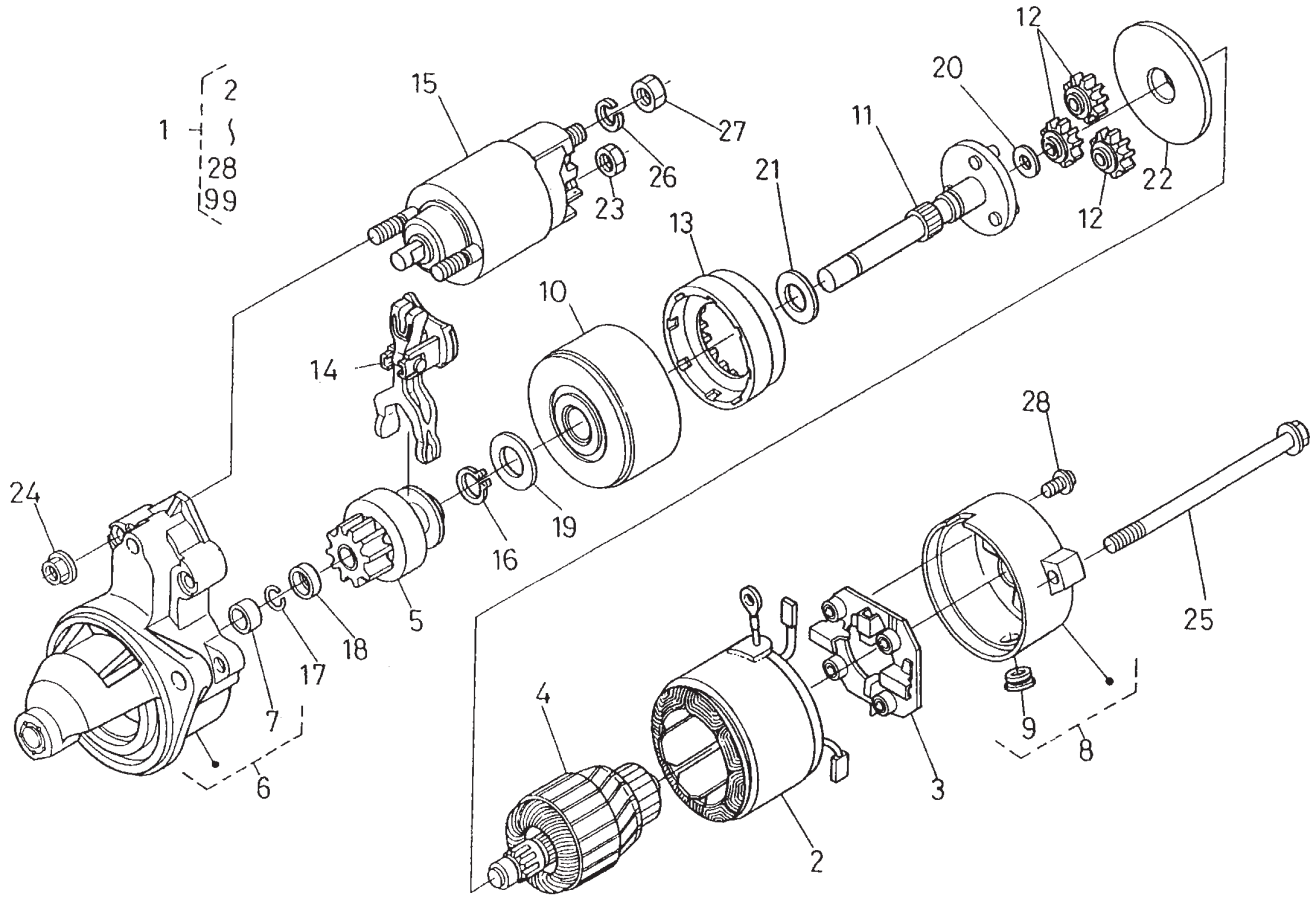

67992–001–10

Sheet No.:24

Starter (Complete Parts)

Ref. No.	Part No.	Qty.	Description
1	100–2179	1	Starter ASM
2	100–2181	1	Starter Yoke ASM
3	100–2222	1	Holder ASM
4	100–2182	1	Armature ASM
5	100–2185	1	Starter Clutch ASM
6	100–2180	1	Starter Housing ASM
7	100–2183	1	Bearing
8	100–2186	1	Frame ASM
9	100–2213	1	Cover
10	100–2223	1	Bearing ASM
11	100–2187	1	Starter Shaft ASM
12	100–2220	3	Gear
13	100–2221	1	Gear
14	100–2218	1	Lever
15	100–2211	1	Magnetic Switch ASM
16	100–2219	1	Ring–Snap
17	100–2212	1	Ring–Snap
18	100–2216	1	Collar
19	100–2224	1	Washer–Plain
20	100–2225	1	Washer–Plain
21	100–2226	1	Washer–Plain
22	100–2227	1	Plate
23	100–2243	1	Nut–Hex
24	100–1813	2	Nut
25	100–2210	2	Bolt–Through
26	100–2215	1	Washer–Spring

Ref. No.	Part No.	Qty.	Description
27	100–2171	1	Nut–Hex
28	100–2188	2	Screw
99	99–1434	1	Wire–Lead

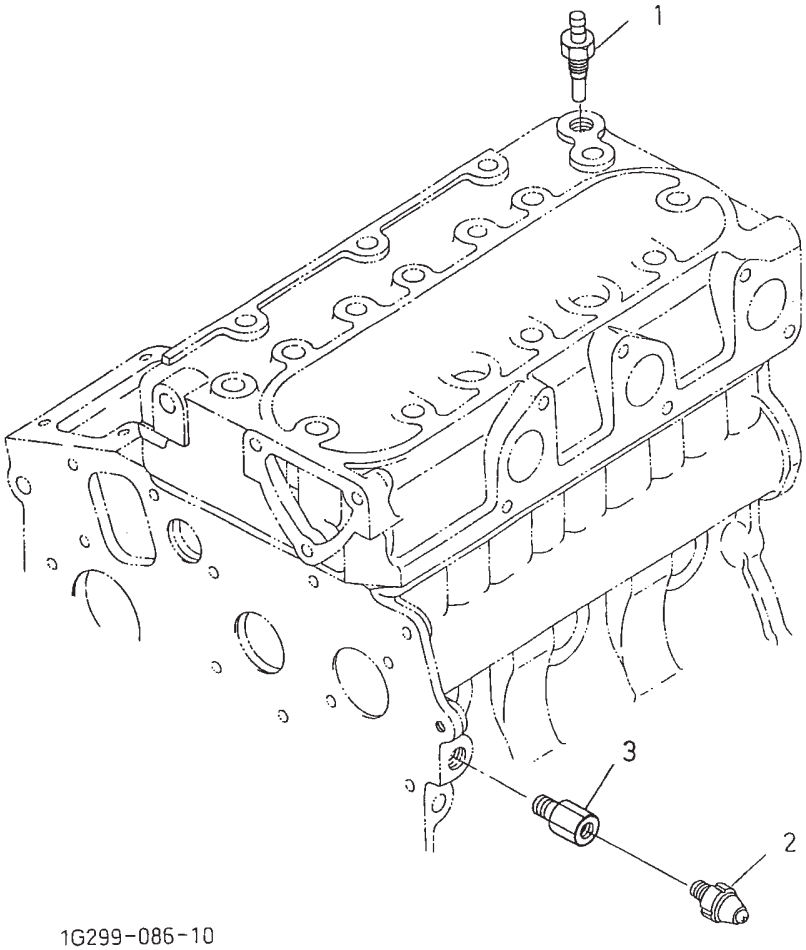

1G299–086–10

Sheet No.:25

Oil Switch and Thermoswitch Assembly

Ref. No.	Part No.	Qty.	Description
1	99–3582	1	Thermo–Switch
2	98–7764	1	Switch–Oil
3	100–2170	1	Holder–Signal, Oil

Ref. No.	Part No.	Qty.	Description

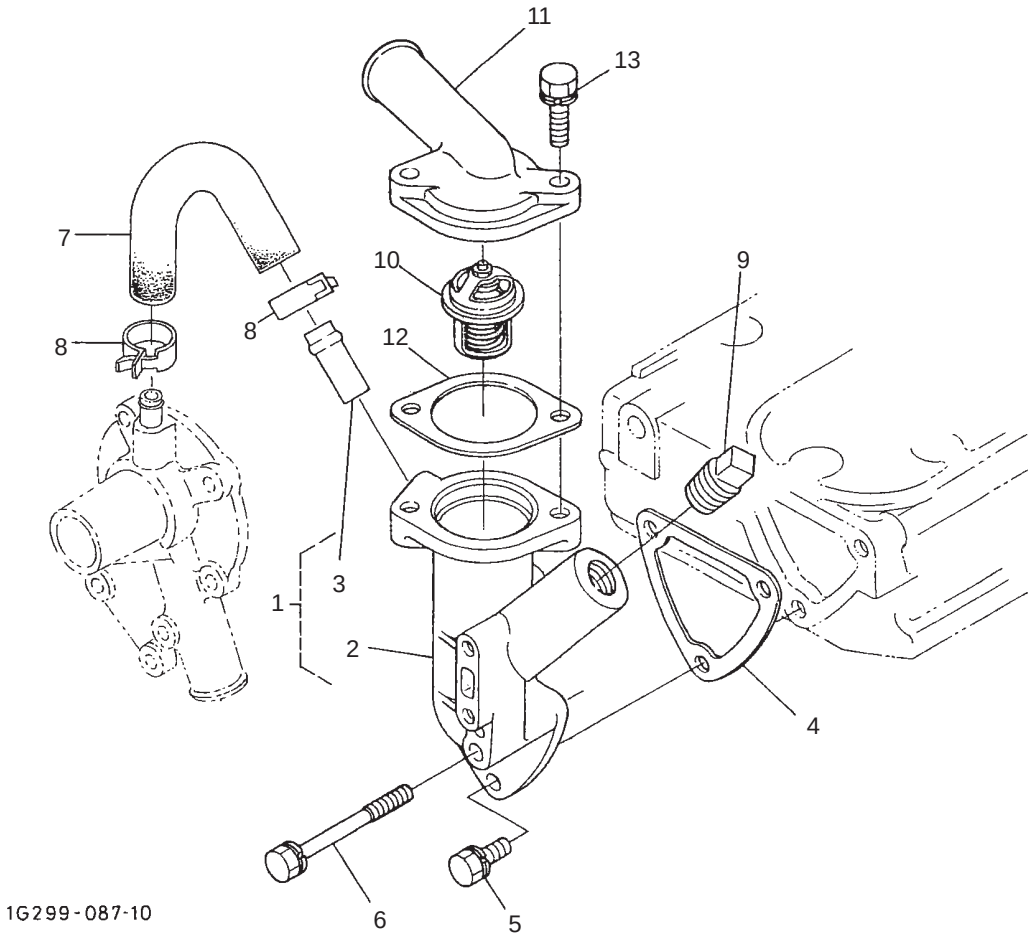

Sheet No.:26

Water Flange and Thermostat Assembly

Ref. No.	Part No.	Qty.	Description
1	100–2165	1	Flange–Water, Comp.
2	100–2166	1	Flange–Water
3	98–9580	1	Pipe–Return, Water
4	100–1919	1	Gasket–Flange, Water
5	98–7692	2	Bolt
6	100–1977	1	Bolt
7	100–2017	1	Pipe–Return, Water
8	98–9579	2	Band–Pipe
9	100–1789	1	Plug
10	100–2053	1	Thermostat ASM
11	100–1920	1	Cover–Thermostat
12	100–1869	1	Gasket–Thermostat
13	98–9353	2	Bolt

Ref. No.	Part No.	Qty.	Description

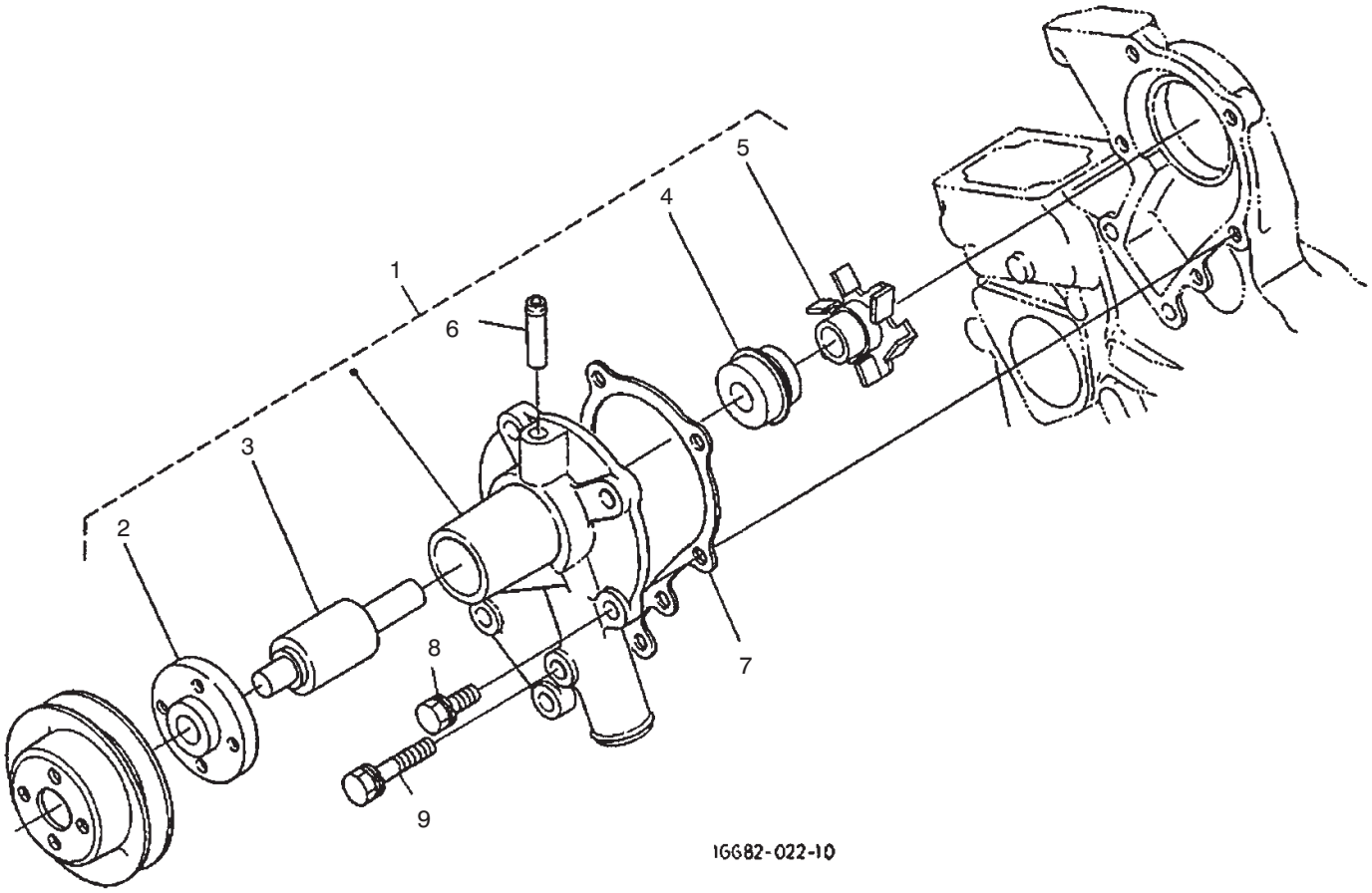

Sheet No.:27

Water Pump Assembly

Ref. No.	Part No.	Qty.	Description
1	100–2065	1	Water Pump ASM
2	100–1933	1	Flange, Water Pump
3	100–1934	1	Bearing, Ball
4	99–3518	1	Seal ASM, Water Pump
5	100–2067	1	Impeller, Water Pump
6	100–1932	1	Pipe, Water Return
7	100–1976	1	Gasket, Water Pump
8	100–1750	4	Bolt
9	100–1764	1	Bolt

Ref. No.	Part No.	Qty.	Description

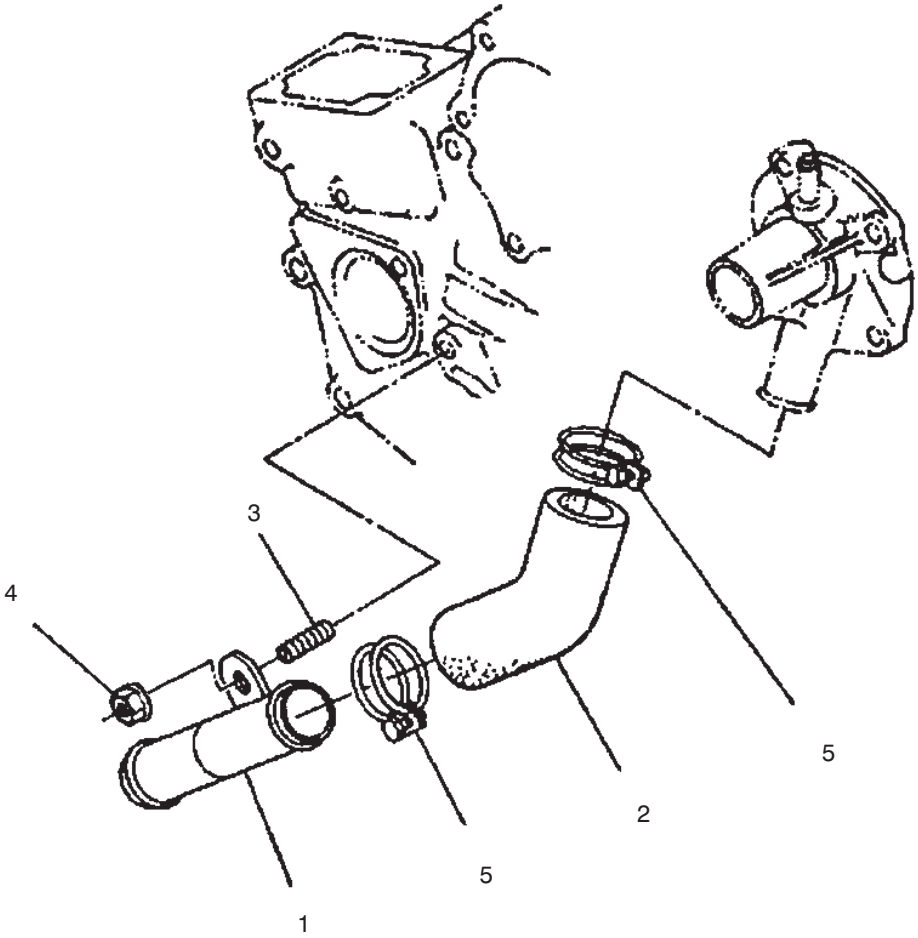

Sheet No.:28

Water Pipe Assembly

Ref. No.	Part No.	Qty.	Description
1	100–1918	1	Pipe, Water
2	100–1975	1	Pipe, Water
3	100–1924	1	Stud
4	100–2203	1	Nut–Flange
5	100–1753	2	Clamp, Hose

Ref. No.	Part No.	Qty.	Description

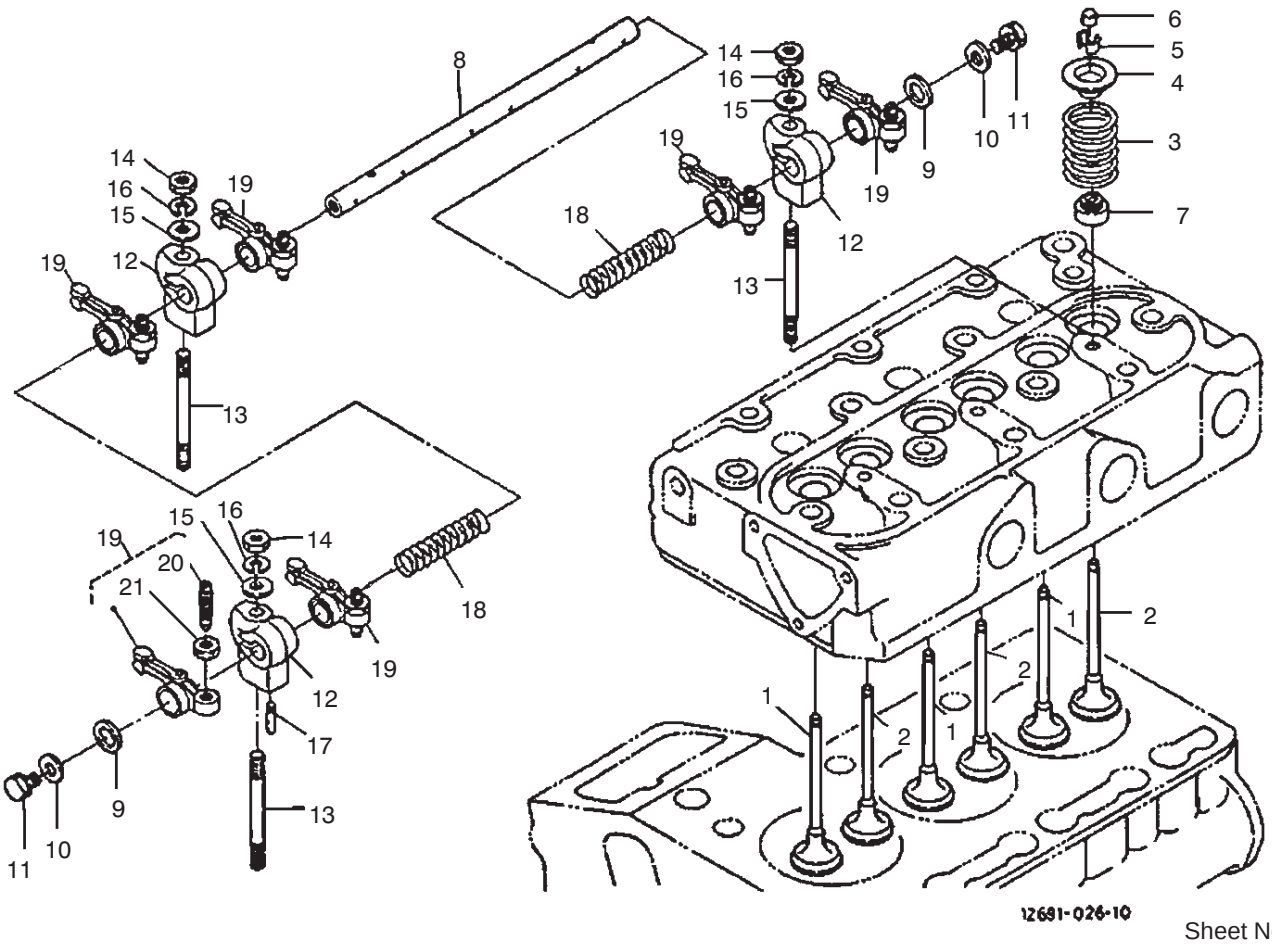

Sheet No.:29

Valve and Rocker Arm Assembly

Ref. No.	Part No.	Qty.	Description
1	100–1821	3	Valve–Inlet
2	100–1822	3	Valve–Exhaust
3	100–1823	6	Spring–Valve
4	100–1825	6	Retainer–Valve, Sp.
5	100–1826	6	Collet–Spring, Valve
6	100–2155	6	Cap–Valve
7	100–1797	6	Seal–Stem, Valve
8	100–2237	1	Shaft–Arm, Rocker
9	100–2044	2	Washer
10	100–1927	2	Washer–Plain
11	100–1762	2	Bolt
12	100–1886	3	Bracket–Arm, Rocker
13	100–1829	3	Stud
14	98–7572	3	Nut
15	98–7648	3	Washer–Plain
16	98–9367	3	Washer–Spring
17	98–7602	1	Pin–Spring
18	100–1828	2	Spring,–Arm, Rocker
19	100–1884	6	Rocker Arm ASM
20	100–1885	6	Screw–Adjusting
21	100–1827	6	Nut

Ref. No.	Part No.	Qty.	Description

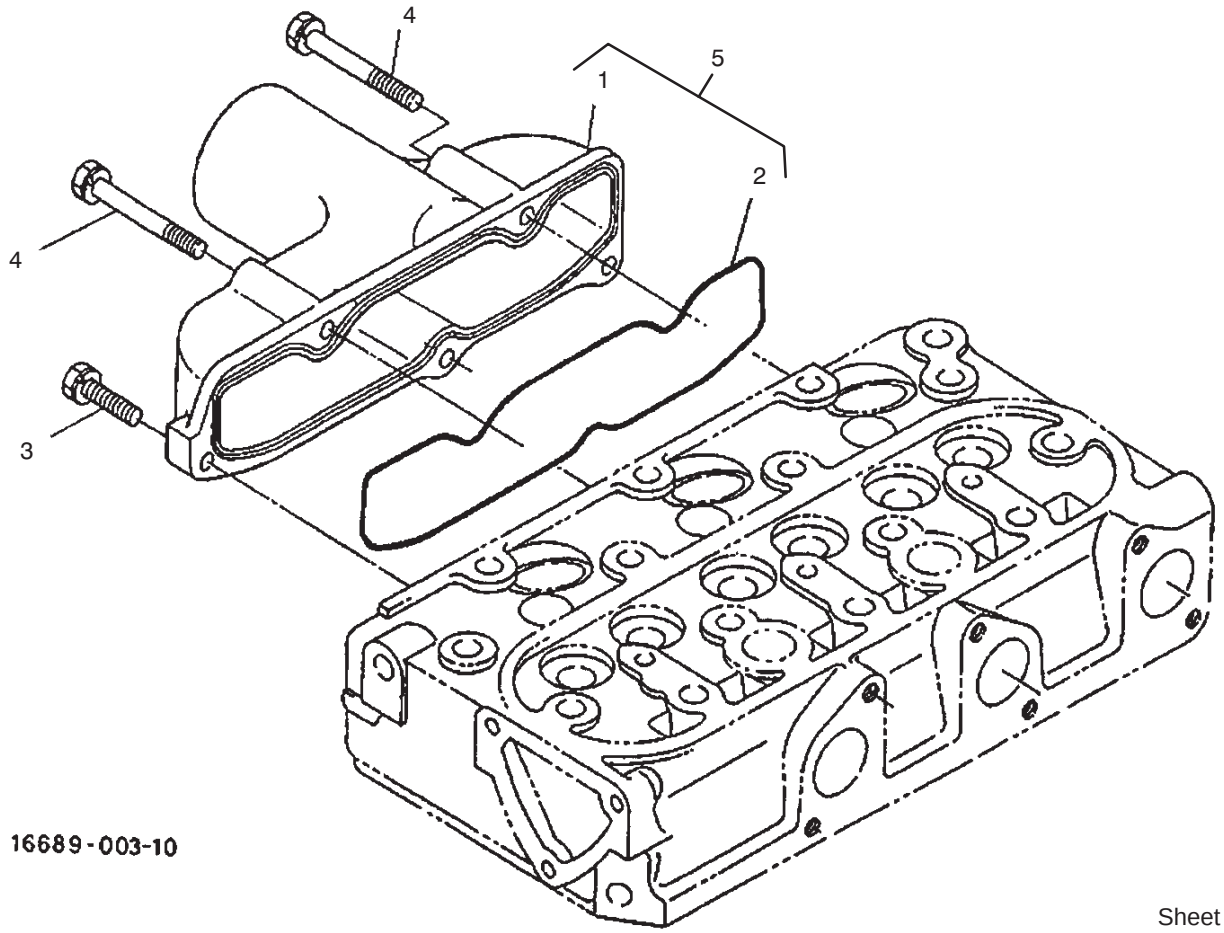

Sheet No.:30

Inlet Manifold Assembly

Ref. No.	Part No.	Qty.	Description
1	100–2235	1	Manifold, Inlet
2	100–1937	1	Gasket, In–Manifold
3	98–7605	2	Bolt
4	100–1765	3	Bolt
5	100–2236	1	Inlet Manifold ASM

Ref. No.	Part No.	Qty.	Description

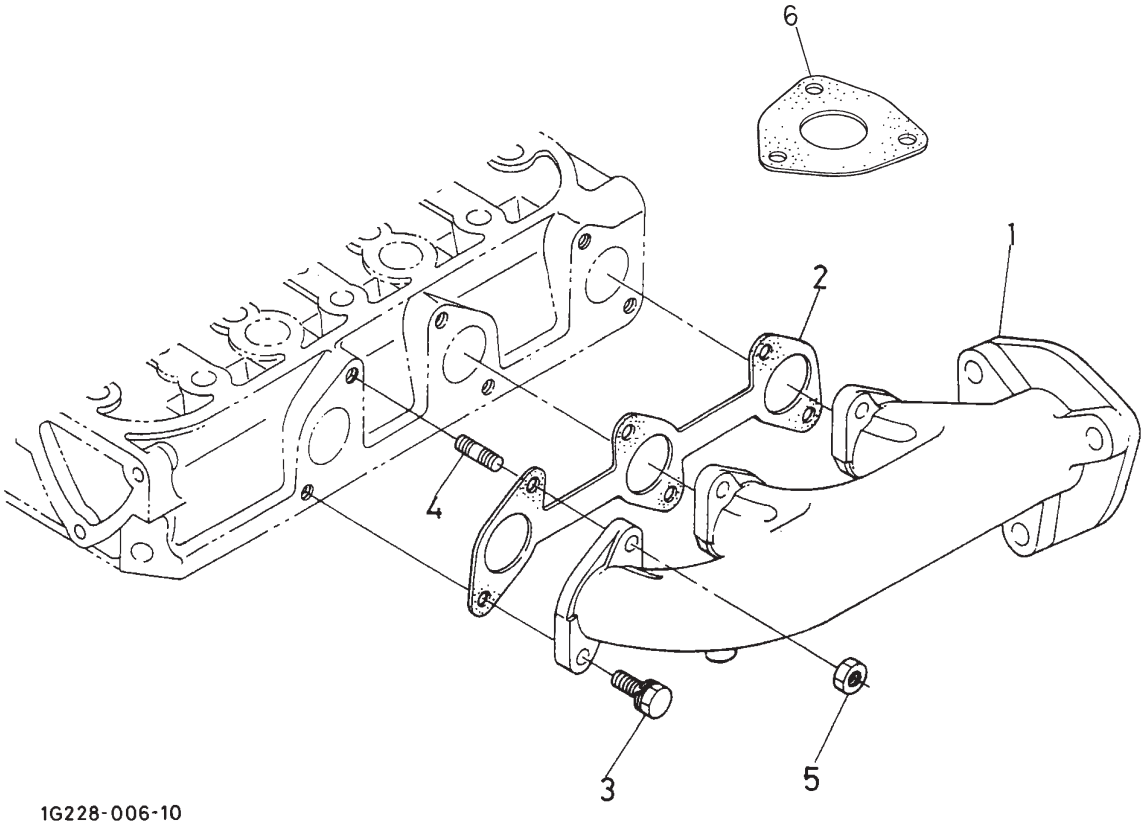

Sheet No.:31

Exhaust Manifold Assembly

Ref. No.	Part No.	Qty.	Description
1	100–2244	1	Manifold, Exhaust
2	100–1957	1	Gasket
3	100–1775	3	Bolt, Ubs
4	100–2202	3	Stud
5	100–1778	3	Nut, Ubs
6	100–2238	1	Gasket, Muffler

Ref. No.	Part No.	Qty.	Description

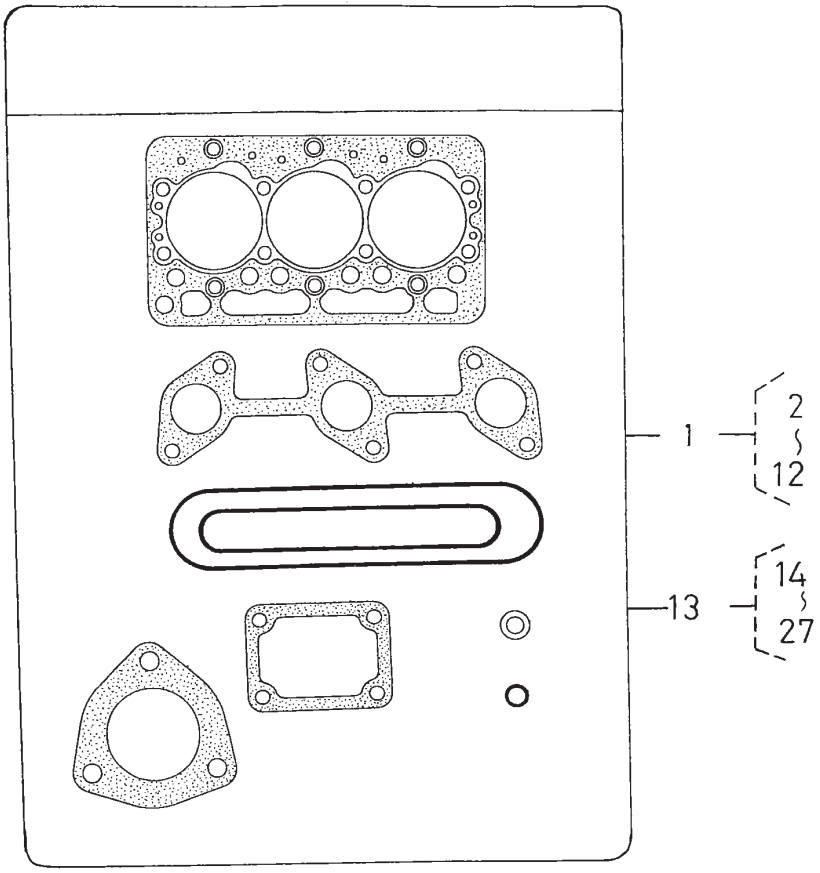

Sheet No.:32

Gasket Kit

Ref. No.	Part No.	Qty.	Description
1	100–2176	1	Kit–Gasket, Upper
2	98–7509	1	O–Ring
3	100–2043	1	Gasket–Head, Cylinder
4	100–1937	1	Gasket–In–Manifold
5	100–1957	1	Gasket
6	100–1797	6	Seal–Stem, Valve
7	100–2030	1	Gasket–Cover, Head
8	98–7654	3	Gasket
9	99–3446	1	O–Ring
10	100–1919	1	Gasket–Flange, Water
11	100–2157	1	Gasket–Thermostat
12	100–2238	1	Gasket–Muffler
13	100–2174	1	Kit–Gasket, Lower
14	100–1976	1	Gasket–Pump, Water
15	100–1954	1	Gasket–Case, Gear
16	100–2206	3	O–Ring
17	100–1929	1	Gasket–Case, Bearing
18	100–1876	1	Gasket–Case, Bearing
19	100–2209	1	O–Ring
20	100–2205	1	O–Ring
21	100–2003	1	Gasket–Pump, Oil
22	98–9636	1	Gasket–Pump, Fuel
23	100–2061	1	Gasket–Gearcase, H/M
24	100–1914	1	Gasket
25	98–7428	2	Gasket

Ref. No.	Part No.	Qty.	Description
26	100–2208	1	O–Ring
27	100–2207	1	O–Ring

Maintenance Record

Date								

Maintenance Record

Date								

Maintenance Record

Date								

TORO®