Form No. 3323-759

TORO®

Super Recycler®

Walk Power Lawn Mower

Model No. 20487—200000001 and Up

Operator's Manual

Para obtener una versión gratis de este manual en español, escriba a la dirección indicada más abajo. Asegúrese de indicar el modelo y el número de serie de su producto.

Pour obtenir gratuitement une version en français de ce manuel, écrivez à l'adresse ci-dessous. N'oubliez pas d'indiquer les numéros de modèle et de série de votre produit.

The Toro Company, Attn: Parts Dept., 8111 Lyndale Ave S, Bloomington, MN 55420-1196

Domestic English (EN)

Contents

	Page
Introduction	2
Safety	3
General Lawn Mower Safety	3
Safety and Instruction Decals	5
Assembly	6
Installing the Handle	6
Installing the Starter Rope	7
Before Starting	7
Filling the Crankcase with Oil	7
Filling the Fuel Tank with Gasoline	8
Operation	9
Controls	9
Starting the Engine	9
Stopping the Engine	10
Using the Self-propel Drive	10
Pulling the Lawn Mower Rearward	10
Checking the Control Bar Operation	10
Adjusting the Cutting Height	12
Operating Tips	13
Maintenance	15
Recommended Maintenance Schedule	15
Checking the Engine Oil Level	16
Changing the Engine Oil	16
Cleaning the Underside of the Lawn Mower Housing	18
Servicing the Air Filter	18
Replacing the Spark Plug	19
Lubricating the Lawn Mower	19
Cleaning under the Blade Brake Clutch (BBC) Shield	20
Maintaining the Blade	20
Adjusting the Self-propel Drive Cable	22
Cleaning under the Belt Cover	22
Adjusting the Throttle	22
Emptying the Fuel Tank	23
Troubleshooting	23
Storage	24
Preparing the Fuel System	24
Preparing the Engine	24
General Information	24
Removing from Storage	25
Accessories	25
Federal and California Emission Control Warranty Statement	30
The Toro Total Coverage Guarantee	32

WARNING

The engine exhaust from this product contains chemicals known to the State of California to cause cancer, birth defects, or other reproductive harm.

Introduction

Thank you for choosing a Toro product. We want you to be completely satisfied with your new purchase.

Read this manual carefully to learn how to operate and maintain your product properly. The information in this manual can help you and others avoid injury and product damage. Although Toro designs and produces safe products, you are responsible for operating the product properly and safely.

Whenever you contact your Authorized Service Dealer or the factory for help with service, genuine Toro parts, or additional information, have the model number and the serial number of your product handy. You will find the model number and serial number decal on the product as illustrated in Figure 1.

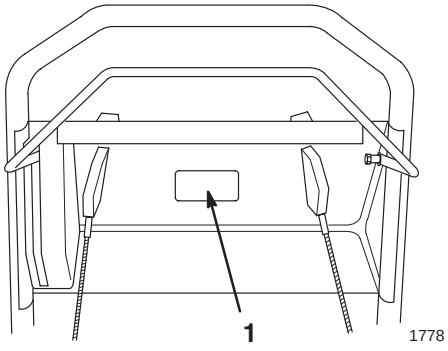

Figure 1

1. Model number and serial number decal

Write the product model number and serial number in the space below:

Model No. _____

Serial No. _____

©1999 The Toro Company
All Rights Reserved

Printed in USA

This manual identifies potential hazards and has special safety messages that help you and others avoid personal injury and even death. DANGER, WARNING, and CAUTION are words used to identify the level of hazard.

DANGER signals an extreme hazard that will cause serious injury or death if you do not follow the recommended precautions.

WARNING signals a hazard that may cause serious injury or death if you do not follow the recommended precautions.

CAUTION signals a hazard that may cause minor or moderate injury if you do not follow the recommended precautions.

This manual uses two other words to highlight information. **Important** calls attention to special mechanical information and **Note** emphasizes general information worthy of special attention.

Safety

This lawn mower meets or exceeds CPSC blade safety requirements for walk-behind rotary mowers and the B71.1 specifications of the American National Standards Institute, in effect at time of production. However, improper use or maintenance by the operator or owner can result in injury. To reduce the potential for injury, comply with these safety instructions.

Toro designed this lawn mower for cutting and mulching grass, or, when equipped with a grass bag, for catching cut grass. Any use for purposes other than these could prove dangerous to the operator or to bystanders.

Note: This engine is **not** equipped with a spark arrester muffler. Operating this mower on any forest-covered, brush-covered, or unimproved grass-covered land without an approved spark arrester muffler may violate your state law.

WARNING

POTENTIAL HAZARD
- **Engine exhaust contains carbon monoxide, which is an odorless, deadly poison.**

WHAT CAN HAPPEN
- **Carbon monoxide can kill you.**

HOW TO AVOID THE HAZARD
- **Do not run the engine indoors or in an enclosed area.**

To ensure maximum safety, best performance, and to gain knowledge of the product, it is essential that you and any other operator of the lawn mower read and understand the contents of this manual before the motor is ever started. Pay particular attention to the safety alert symbol ⚠ which means CAUTION, WARNING, OR DANGER — "personal safety instruction." Read and understand the instruction because it has to do with safety. Failure to comply with instruction may result in personal injury.

General Lawn Mower Safety

The following instructions have been adapted from the ANSI/OPEI standard B71.1—1998 and ISO standard 5395:1990(E). Information or terminology specific to Toro lawn mowers is enclosed in parenthesis.

This cutting machine is capable of amputating hands and feet and throwing objects. Failure to observe the following safety instructions could result in serious injury or death.

Training

- Read the instructions carefully. Be familiar with the controls and the proper use of the equipment before starting.
- See manufacturer's instructions for proper operation and installation of accessories. Only use accessories approved by the manufacturer.
- Never allow children or people unfamiliar with these instructions to use the mower. Local regulations may restrict the age of the operator.
- Never mow while people, especially children, or pets are nearby. Stop mower if anyone enters the area.

Tragic accidents can occur if the operator is not alert to the presence of children. Children are often attracted to the mower and the mowing activity. **Never** assume that children will remain where you last saw them.

- Keep children out of the mowing area and under the watchful care of a responsible adult.
- Be alert and turn mower off if children enter the area.
- Use extra care when approaching blind corners, shrubs, trees, or other objects that may obscure vision.
- Keep in mind that the operator or user is responsible for accidents or hazards occurring to other people or their property.

Preparation

- While mowing, always wear substantial footwear and long trousers.
- Do not operate the equipment when barefoot or wearing open sandals.
- Always wear safety goggles or safety glasses with side shields when operating mower.

- Thoroughly inspect the area where the equipment is to be used and remove all stones, sticks, wires, bones, and other foreign objects.
- **Warning: Gasoline is highly flammable.** Take the following precautions:
  - Store fuel in containers specifically designed for this purpose.
  - Refuel outdoors only and do not smoke while refuelling.
  - Add fuel before starting the engine. Never remove the cap of the fuel tank or add gasoline while the engine is running or when the engine is hot.
  - If gasoline is spilled, do not attempt to start the engine but move the machine away from the area of spillage and avoid creating any source of ignition until gasoline vapors have dissipated.
  - Replace all fuel tank and container caps securely.
  - If the fuel tank has to be drained, do this outdoors.
- Replace faulty mufflers.
- Before using, always visually inspect to see that the blades, blade bolts, and cutter assembly are not worn or damaged. Replace worn or damaged blades and bolts in sets to preserve balance.
- On multibladed machines, take care as rotating one blade can cause other blades to rotate.

Operation

- Do not operate the engine in a confined space where dangerous carbon monoxide fumes can collect.
- Mow only in daylight or in good artificial light.
- Always be sure of your footing on slopes.
- Walk; never run.
- Keep a firm hold on the handle.
- For wheeled rotary machines, mow across the face of slopes, never up and down.
- Exercise extreme caution when changing direction on slopes.
- Do not mow excessively steep slopes.
- Use extreme caution when reversing or pulling the mower toward you.
- Before and while moving backwards, look behind and down for small children.
- Stop the blade(s) if the mower has to be tilted for transportation when crossing surfaces other than grass and when transporting the mower to and from the area to be mowed.
- Never operate the mower with damaged or missing guards or shields, or without safety devices; for example, deflectors and/or grass catchers in place.
- Do not change the engine governor settings or overspeed the engine.
- Disengage all blade and drive clutches before starting the engine.
- Start the engine or switch on the motor carefully according to instructions and with feet well away from the blade(s).
- Do not tilt when starting the engine or switching on the motor, unless the mower has to be tilted for starting. In this case, do not tilt it more than absolutely necessary and lift only the part which is away from the operator.
- Do not start the engine when standing in front of the discharge chute.
- Do not put hands or feet near or under rotating parts. Keep clear of the discharge opening at all times.
- Never pick up or carry a mower while the engine is running.
- Stop the engine and disconnect the spark plug lead
  - before clearing blockages or unclogging chute;
  - before checking, cleaning, or working on the mower;
  - after striking a foreign object. Inspect the mower for damage and make repairs before restarting and operating the mower;
  - if mower starts to vibrate abnormally (check immediately).
- Stop the engine
  - whenever you leave the mower;
  - before refuelling.
- Reduce the throttle setting during engine run-out and, if the engine is provided with a shut-off valve, turn the fuel off at the conclusion of mowing.
- Stop the blade(s) when crossing gravel drives, walks, or roads.
- Shut the engine off and wait until the blade comes to complete stop before removing grass catcher.
- Do not operate the mower while under the influence of alcohol or drugs.

- If the equipment should start to vibrate abnormally, stop the engine and check immediately for the cause. Vibration is generally a warning of trouble.

Slopes are a major factor related to slip and fall accidents which can result in a severe injury. If you feel uneasy on a slope, do not mow it.

- Watch for holes, ruts, or bumps. Tall grass can hide obstacles.
- **Do not** mow near drop-offs, ditches, or embankments. The operator could lose footing or balance.
- **Do not** mow on wet grass. Reduced footing could cause slipping.

Maintenance and Storage

- Keep all nuts, bolts (especially blade attachment bolts), and screws tight to be sure the equipment is in safe working condition.
- Never store the equipment with gasoline in the tank inside a building where fumes may reach an open flame or spark.
- Allow the engine to cool before storing in any enclosure.
- To reduce the fire hazard, keep the engine, muffler, battery compartment, and gasoline storage area free of grass, leaves, or excessive grease.
- Check the grass catcher frequently for wear or deterioration.
- Replace worn or damaged parts for safety.
- Use extra care when handling gasoline; vapors are explosive.
- Never tamper with safety devices. Check their proper operation regularly.
- Keep the mower free of grass, leaves, or other debris build-up. Clean up oil or fuel spillage.
- Stop and inspect the equipment if you strike an object. Repair, if necessary, before restarting.
- Never attempt to make wheel height adjustments while the engine is running.
- Always disconnect electric mowers (live operated) before cleaning, repairing, or adjusting.
- Grass catcher components are subject to wear, damage, and deterioration, which could expose moving parts or allow objects to be thrown. Frequently check components and replace with manufacturer's recommended parts when necessary.
- Mower blades are sharp and can cut. Wrap the blade(s) or wear gloves, and use extra caution when servicing them.
- Do not change the engine governor setting or overspeed the engine.
- To ensure the best performance and safety, purchase only genuine Toro replacement parts and accessories. **Do not use "will fit" parts and accessories; they may cause a safety hazard.**

Safety and Instruction Decals



Safety decals and instructions are easily visible to the operator and are located near any area of potential danger. Replace any decal that is damaged or lost.



On Mower Housing
(Part No. 43-8480)



On Mower Housing
(Part No. 99-6018)

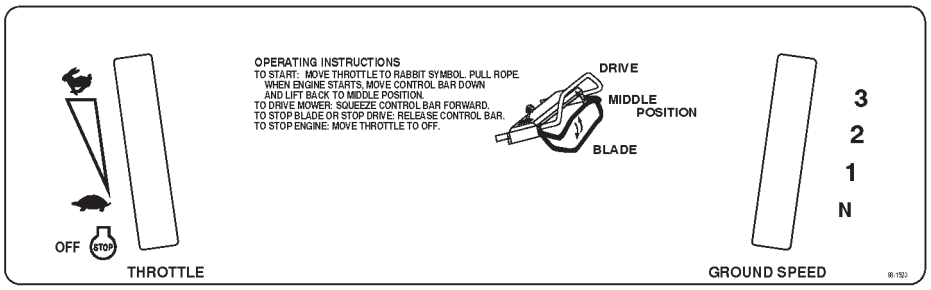

On Control Panel
(Part No. 98-1523)

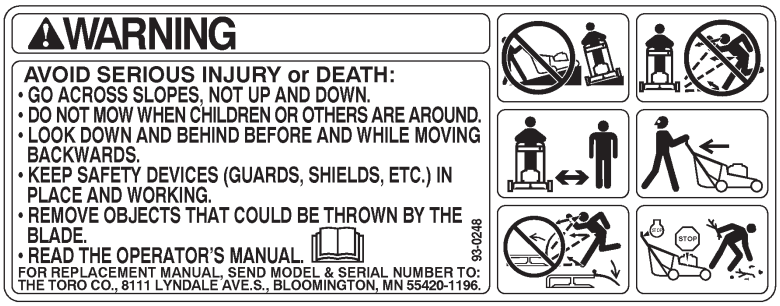

On Mower Deck
(Part No. 93-0248)

Assembly

Note: Determine the left and right sides of the lawn mower by standing in the operating position.

Installing the Handle

1. Remove the fillers from the box.
2. Install the upper handle onto the lower handle using the two knobs (they come loose with the lawn mower) on the left and right side of the handle as shown in Figure 2.

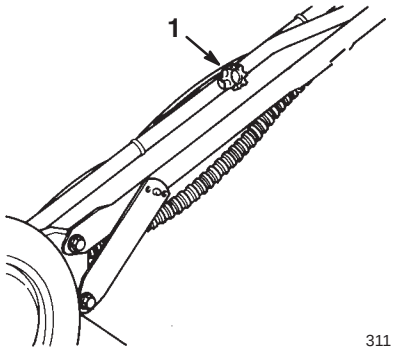

Figure 2

1. Handle knob (2)

Note: Position both handle knobs on the **inside** of the handles.

3. Move the handle latches slightly outward to allow the handle to freely pivot backward into the operating position (Fig. 3).

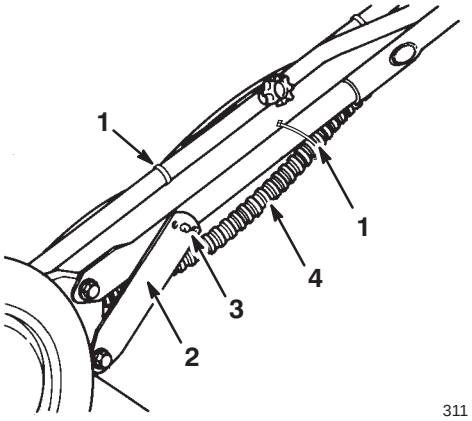

Figure 3

1. Cable tie
2. Handle latch
3. Handle stud
4. Control Cable

WARNING

POTENTIAL HAZARD

- **Folding or unfolding the handle improperly can pinch, stretch, or damage one or more of the cables.**

WHAT CAN HAPPEN

- **Any pinched, stretched, or damaged cable may cause an operational failure that results in an unsafe operating condition.**

HOW TO AVOID THE HAZARD

- **Do not pinch, stretch, or damage the cables.**
- **Handle the cables with care when folding or unfolding the handle.**
- **Do not use the lawn mower if one or more of the cables are pinched, stretched, or damaged. Contact your Authorized Service Dealer.**

4. Pivot the handle backward.

5. Move the handle latches inward while snapping the handle stud into the center hole of the handle latch (Fig. 3).

Note: If a handle latch does not fit tightly against the handle tube, remove the latch from the handle stud, bend the latch inward, and attach it to the handle stud. Repeat as necessary to ensure a tight fit between the latch and the handle.

6. Tighten the handle knobs securely.

Note: If handle height is not satisfactory, adjust it by placing the handle stud into a different hole.

7. Make sure that the control cables are to the rear and inside of the handles and secure the cables to the handle with cable ties (Fig. 3).

Installing the Starter Rope

Pull the starter rope through the rope guide on the handle (Fig. 4).

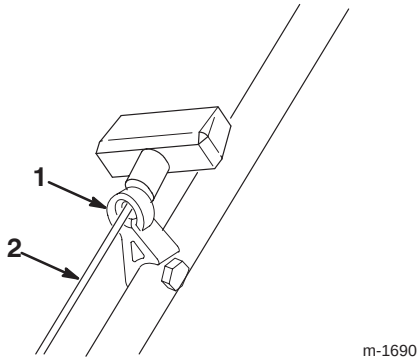

Figure 4

1. Rope guide
2. Starter rope

Before Starting

Filling the Crankcase with Oil

The crankcase can hold 22 ounces (0.65 liters) of oil. Use only a high-quality, SAE 30 or 10W30 weight detergent oil that has the American Petroleum Institute (API) "service classification" — SF, SG, SH, or SJ.

Before each use, make sure that the oil level is between the *Add* and the *Full* marks on the dipstick (Fig. 5).

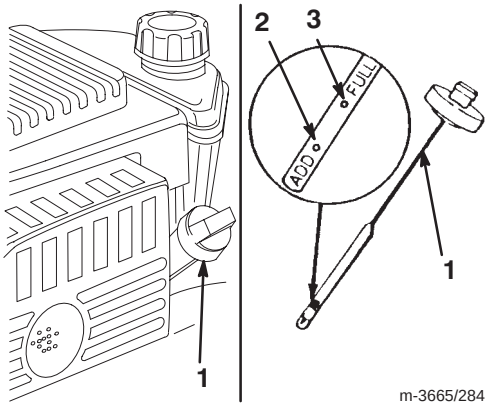

Figure 5

1. Dipstick
2. *Add* mark
3. *Full* mark

To add oil:

1. Move the lawn mower to a level surface.
2. Clean around the dipstick (Fig. 5).
3. Remove the dipstick by rotating the cap counterclockwise and pulling it out.
4. Wipe the dipstick clean with a clean cloth.
5. Fully insert the dipstick into the filler neck, then remove it.

Note: To ensure an accurate oil level reading, you must fully install the dipstick.

6. Read the oil level on the dipstick (Fig. 5).
7. If the oil level reading is below the *Add* mark on the dipstick, **slowly** pour only enough oil into the filler hole to raise the oil level to the *Full* mark on the dipstick.

IMPORTANT: Do not overfill the crankcase with oil and run the engine; engine damage will result. Drain the excess oil until the oil level on the dipstick reads *Full*.

8. Insert the dipstick into the filler neck and rotate the cap clockwise until it is tight.

Filling the Fuel Tank with Gasoline

For best results, use clean, fresh, lead-free gasoline, including *oxygenated* or *reformulated* gasoline, with an octane rating of 87 or higher. To ensure freshness, purchase only the quantity of gasoline that you expect to use in 30 days. Using unleaded gasoline results in fewer combustion deposits and longer engine life. You may use leaded gasoline if unleaded gasoline is not available.

IMPORTANT: Do not add oil to the gasoline.

IMPORTANT: Do not use methanol, gasoline containing methanol, gasohol containing more than 10% ethanol, premium gasoline, or white gas. Using these fuels can damage the engine's fuel system.

IMPORTANT: Do not use gasoline that has been stored since the last mowing season or longer.

DANGER

POTENTIAL HAZARD
- **In certain conditions, gasoline is extremely flammable and highly explosive.**

WHAT CAN HAPPEN
- **A fire or explosion from gasoline can burn you and others and can damage property.**

HOW TO AVOID THE HAZARD
- **Use a funnel and fill the fuel tank outdoors, in an open area, and when the engine is cold. Wipe up any gasoline that spills.**
- **Do not fill the fuel tank completely full. Add gasoline to the fuel tank until the level is 1/4 to 1/2 inch (6 to 13 mm) below the bottom of the filler neck. This empty space in the tank allows gasoline to expand.**
- **Never smoke when handling gasoline, and stay away from an open flame or where a spark may ignite the gasoline fumes.**
- **Store gasoline in an approved container and keep it out of the reach of children.**
- **Never buy more than a 30-day supply of gasoline.**

DANGER

POTENTIAL HAZARD
- **When fueling, under certain circumstances, a static charge can develop, igniting the gasoline.**

WHAT CAN HAPPEN
- **A fire or explosion from gasoline can burn you and others and damage property.**

HOW TO AVOID THE HAZARD
- **Always place gasoline containers on the ground away from your vehicle before filling.**
- **Do not fill gasoline containers inside a vehicle or on a truck or trailer bed because interior carpets or plastic truck bed liners may insulate the container and slow the loss of any static charge.**
- **When practical, remove gasoline-powered equipment from the truck or trailer and refuel the equipment with its wheels on the round.**
- **If this is not possible, then refuel such equipment on a truck or trailer from a portable container, rather than from a gasoline dispenser nozzle.**
- **If you must use a gasoline dispenser nozzle, keep the nozzle in contact with the rim of the fuel tank or container opening at all times until fueling is complete.**

Use a fuel stabilizer/conditioner regularly during operation and storage. A stabilizer/conditioner cleans the engine during operation and prevents gum-like varnish deposits from forming in the engine during periods of storage.

IMPORTANT: Do not use fuel additives other than a fuel stabilizer/conditioner. Do not use fuel stabilizers with an alcohol base such as ethanol, methanol, or isopropanol.

1. Clean around the fuel tank cap (Fig. 6).

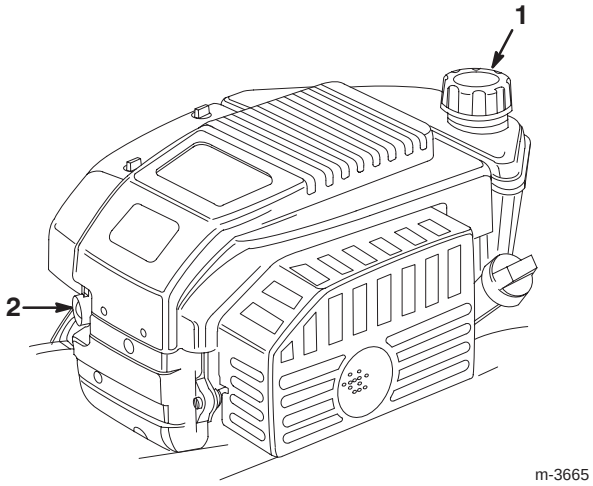

Figure 6

1. Fuel tank cap
2. Primer

2. Remove the cap from the tank.

3. Fill the fuel tank with unleaded gasoline to within 1/4 to 1/2 inch (6 to 13 mm) from the top of the tank. **Do not fill into the filler neck.**

4. Install the fuel tank cap and wipe up any spilled gasoline.

Operation

Each time before you mow, make sure that the self-propel drive and the control bar operate properly. When you release the blade control bail, the blade should stop. If it does not, contact an Authorized Service Dealer.

Controls

The throttle control, the ground speed control, the control bar, and the recoil starter are on the upper handle (Fig. 7).

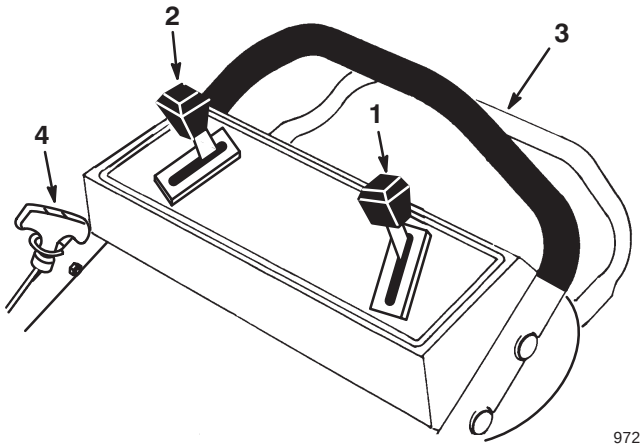

Figure 7

1. Throttle control
2. Ground speed control
3. Control bar
4. Recoil starter

Starting the Engine

1. Connect the wire to the spark plug (Fig. 8).

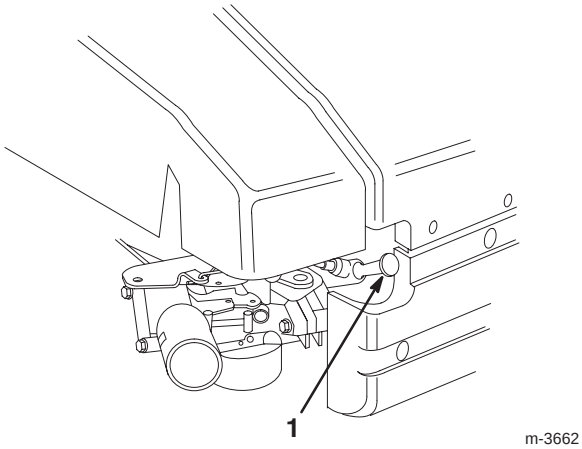

Figure 8

1. Spark plug wire

2. Move the throttle control to the (*Fast*) position.

3. Push the primer three times (Fig. 6). **Wait about two seconds between each push.**

Note: Do not use the primer to start a warm engine after a brief shutdown. However, cool weather may require you to prime the engine again.

4. Pull the recoil starter out until there is no slack in the rope, then pull it vigorously.

5. Regulate the throttle as desired between the (*Fast*) and the (*Slow*) positions.

Note: Allow the engine to warm up for at least one minute; longer in cooler temperatures.

Stopping the Engine

1. Release the control bar to stop the blade and the traction drive.
2. Move the ground speed control to the *N* (*Neutral*) position.
3. Move the throttle to the (*Off*) position and stay behind the handle until all moving parts stop.

Using the Self-propel Drive

The lawn mower has three ground speeds: speed *1* is slow, speed *2* is medium, and speed *3* is a fast-walking pace.

1. Move the ground speed control to the desired setting.
2. Move the control bar down to *A* and raise to *B* to engage the blade (Fig. 9).

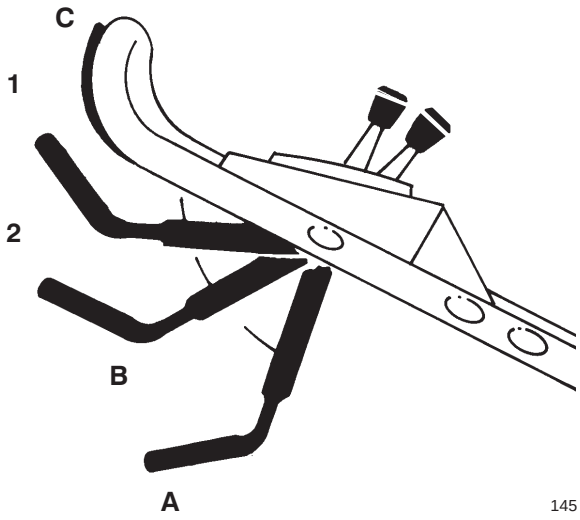

Figure 9

1. Speed varies
2. Middle position

3. Squeeze the control bar against the handle (*C*) to engage the traction drive (Fig. 9).

   The ground speed varies depending on the space between the control bar and the handle. To disengage the traction drive but keep the blade engaged, gradually release the control bar to the middle position (Fig. 9).

   To self-propel with the blade disengaged, simply squeeze the control bar against the handle, eliminating the downward movement necessary to engage the blade.

Note: Do not shift speeds while squeezing the control bar against the handle in the *C* (drive) position (Fig. 9); this can damage the transmission. **Move the control bar to the middle position when you change the ground speed.**

You vary the ground speed by increasing or decreasing the distance between the control bar and the handle. Lower the control bar to slow the lawn mower when making a turn or if the lawn mower moves too fast for you. If you lower the control bar too far, the lawn mower will stop self-propelling. Squeeze the control bar closer to the handle to increase the ground speed. When the control bar is tight against the handle, the lawn mower will self-propel at the maximum ground speed. Move the ground speed control to the *N* (*Neutral*) position when using the lawn mower for trimming.

Pulling the Lawn Mower Rearward

Your lawn mower comes with free-wheeling clutches which make it easier to pull the lawn mower rearward. You must lower the control bar enough to disengage the self-propel drive and disengage the clutches before pulling the lawn mower rearward. You may need to push the lawn mower forward one inch or more after you release the control bar to disengage both the self-propel drive the clutches.

For example, if you approach an object such as a tree or bush from which you want to pull back the lawn mower, lower the control bar just enough to disengage the traction drive when the lawn mower is about six inches away from the object. The momentum of the lawn mower should carry it forward at least one inch which will disengage the clutches. You should then be able to easily pull the lawn mower rearward.

Adjust the self-propel cable properly so that you can lower the control bar comfortably to stop the traction drive without stopping the engine. Refer to *Adjusting the Self-propel Drive Cable* on page 22 for cable adjustment information. If you need help, see your Authorized Service Dealer.

Checking the Control Bar Operation

Check the control bar before each use to ensure that the Blade Brake Clutch (BBC) system is operating properly.

Normal Control Bar Operation Test

1. Stop the engine and wait for all moving parts to stop.
2. Move the lawn mower onto a paved surface in a non-windy area.

3. Set all four wheels in to the *E* cutting setting (Fig. 15).
4. Put the ground speed selector in the *N* (*Neutral*) position.
5. Take a half sheet of newspaper and crumple it into a ball small enough to go under the deck (about three inches [76 mm] in diameter) (Fig. 10).

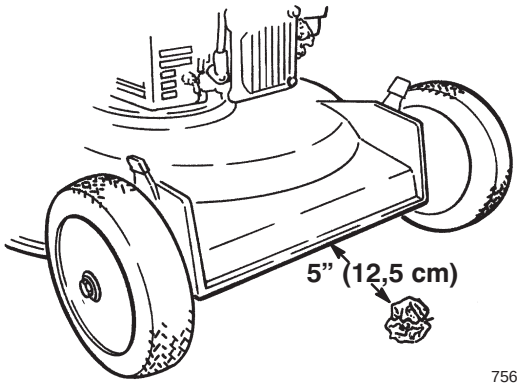

Figure 10

6. Place the ball of newspaper five inches in front of the lawn mower (Fig. 10).
7. Start the engine.
8. Push the control bar down to its lowest position (Fig. 11).

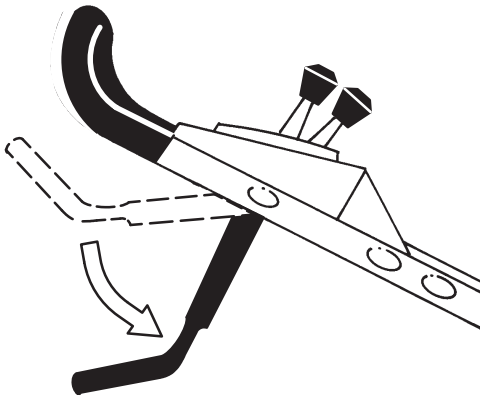

Figure 11

9. Lift control bar to the normal blade engaged position (about one inch below the handle) [Refer to position *A* in Fig. 12]). The fan-like noise indicates that the lawn mower blade is turning.

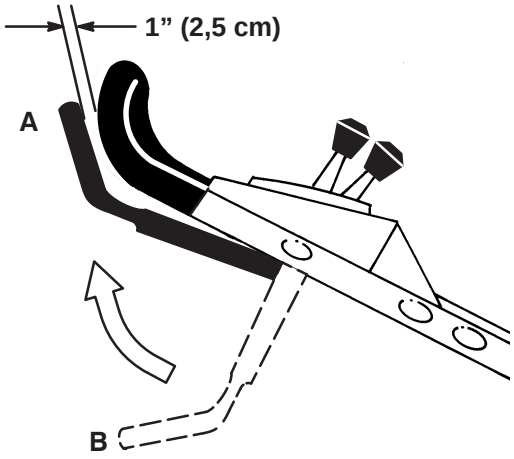

Figure 12

10. Release the control bar (Refer to position *B* in Fig. 13). You should hear a “bang”. The blade should stop in three seconds.

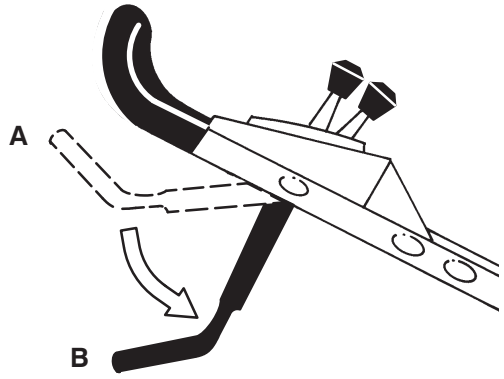

Figure 13

11. Immediately push the lawn mower over the newspaper ball.
12. Turn off the engine and wait for all moving parts to stop.
13. Walk around the lawn mower to check for the newspaper ball. If the ball did not go under the deck, repeat steps 6 through 12.

14. Pull the lawn mower away from the newspaper. If the newspaper ball unravels or is shredded, the blade has not properly stopped, resulting in an unsafe operating condition. Contact an Authorized Service Dealer.

However, to check for a problem with the BBC system **before** it affects its normal operation, you may perform the *Special Control Bar Test* that follows.

Special Control Bar Test

1. Follow steps 1 through 7 from the *Normal Control Bar Test* on page 10.

2. Push the control bar down to its lowest position (Refer to position *B* in Fig. 13).

3. Bring the control bar up into the middle position (about five inches below the handle cross bar) (Refer to position *C* in Fig. 14).

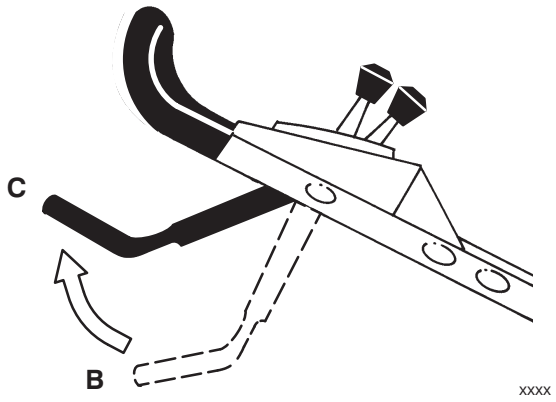

Figure 14

Note: This intermediate position (*C*) is not the normal operating position of the control bar. However, it helps to detect a sticking BBC system early enough to prevent an unsafe condition later.

4. Release the control bar (Refer to position *B* in Fig. 14).

Note: If you hear a loud "bang", you have raised the control bar too high. Repeat steps 2 through 4 above, but do not raise the control bar as high as in step 3.

5. Immediately push the lawn mower over the newspaper ball.

6. Turn off the engine and wait for all moving parts to stop.

7. Walk around the lawn mower to check for the newspaper ball. If the ball did not go under the deck:

A. Place the ball of newspaper five inches in front of the lawn mower (Fig. 10).

B. Start the engine.

C. Follow steps 2 through NO TAG above.

8. Pull the lawn mower away from the newspaper. If the newspaper ball unravels or is shredded, the BBC system could be deteriorating to the point where it could result in an unsafe operating condition. Contact an Authorized Service Dealer for an inspection and repair of your lawn mower.

DANGER

POTENTIAL HAZARD
- **If the blade brake clutch system is inoperative, the blade will continue to rotate when you release the control bar. Contact with blade could occur.**

WHAT CAN HAPPEN
- **Contact with a rotating blade can cause serious injury.**

HOW TO AVOID THE HAZARD
- **Check the BBC operation before each use.**
- **Never use a BBC-equipped power lawn mower with an inoperative safety system.**
- **Take your lawn mower to an Authorized Service Dealer for repair if a safety system fails to operate properly.**

Control Bar Test Using Optional Rear Bag

If you purchased the optional rear bagging kit, you can use the grass bag to perform an additional test to check the blade brake clutch mechanism:

1. Install the empty grass bag on the discharge tunnel.

2. Start the engine.

3. Push the control bar (Fig. 11) down to its lowest position.

4. Lift the control bar to the normal blade engaged position, about one inch below the handle. The bag should begin to inflate, indicating that the blade is engaged and rotating.

5. Release the control bar. If the bag does not immediately deflate, it indicates that the blade is still rotating. The blade brake clutch mechanism may be deteriorating, and if ignored, could result in an unsafe operating condition. Have the lawn mower inspected and serviced by an Authorized Service Dealer.

Adjusting the Cutting Height

You can adjust the cutting height to five settings (Fig. 15). for normal cutting, set all four wheels at the same cutting height.

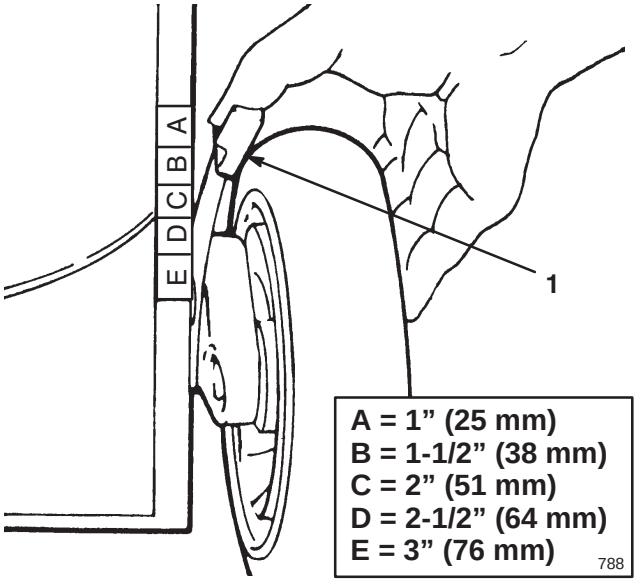

Figure 15

1. Height-of-cut lever

---

1. Stop the engine and wait for all moving parts to stop.

2. Disconnect the wire from the spark plug (Fig. 8).

3. For easier adjustment, lift up the housing so that the wheel is off the ground.

DANGER

POTENTIAL HAZARD
- **Adjusting the height-of-cut levers could bring your hands into contact with a moving blade.**

WHAT CAN HAPPEN
- **Contact with a rotating blade can cause serious injury.**

HOW TO AVOID THE HAZARD
- **Stop the engine and wait for all movement to stop before adjusting the cutting height.**
- **Do not put fingers under the housing when adjusting the cutting height.**

4. Squeeze the height-of-cut lever toward the wheel and move it to the desired setting (Fig. 15). Make sure that the pin on the height-of-cut lever engages the hole in the bracket.

Note: You can adjust the front wheels to 1/2 inch. Move the height-of-cut lever past the *A* setting and release the pin into the slot in the housing. Toro does not recommend that you use the 1/2-inch cutting height setting on a regular basis.

Operating Tips

General Tips

- Review the safety instructions and read this manual carefully before operating the lawn mower.
- Clear the area of sticks, stones, wire, branches, and other debris which could be picked up or hit by the blade and become thrown objects.
- Keep everyone, especially children and pets, away from the area of operation.
- Avoid striking trees, walls, curbs, or other solid objects. Never deliberately mow over any object.
- If the lawn mower strikes an object or starts to vibrate, immediately stop the engine, disconnect the spark plug wire, and examine the lawn mower for damage.
- Maintain a **sharp blade** throughout the cutting season. Periodically file down nicks on the blade.
- Replace the blade when necessary with an original Toro replacement blade.
- Only mow dry grass or leaves. Wet grass and leaves tend to clump on the yard and may cause the lawn mower to plug or the engine to stall.

WARNING

POTENTIAL HAZARD
- **Wet grass or leaves can cause you to slip and contact the blade.**

WHAT CAN HAPPEN
- **Contact with a rotating blade can cause serious injury.**

HOW TO AVOID THE HAZARD
- **Mow only in dry conditions.**

- Clean clippings or leaves from the underside of the lawn mower deck after each mowing. See *Cleaning the Underside of the Lawn Mower Housing* on page 18.

- Keep the engine in good running condition.

WARNING

POTENTIAL HAZARD
- **Operating a lawn mower with its engine running at a speed greater than the factory setting can cause an unsafe operating condition.**

WHAT CAN HAPPEN
- **The lawn mower could throw a part of the blade or engine into the operator's or bystander's area and cause serious personal injury or death.**

HOW TO AVOID THE HAZARD
- **Do not change the engine speed setting.**
- **If you suspect the engine speed is faster than normal, contact your Authorized Service Dealer.**

- Clean the air filter frequently. Mulching stirs up more clippings and dust which clogs the air filter and reduces engine performance.
- To achieve the best mulching action, set the lawn mower cutting height so the lawn mower cuts no more than a third of the grass blade or a maximum of one-inch- (25 mm) long clippings. If you try to mulch more or if the grass is very lush, the mulching action will be poor. Under these conditions, use the side discharge or grass catcher. A few days later, install the mulch plate on your lawn mower to resume mulching.

Cutting Grass

- Grass grows at different rates at different times of the year. In the summer heat, it is best to cut grass at the *C*, *D*, or *E* cutting height settings. Cut only about a third of the grass blade at a time. Cutting below the *C* setting is not recommended unless grass is sparse or it is late fall when grass growth begins to slow down.
- When cutting grass over six inches (15 cm) tall, first mow using the highest cutting height setting and walking slower; then mow again at a lower setting for best lawn appearance. If the grass is too long and leaves clumps on top of the lawn, the lawn mower may plug up and cause the engine to stall.
- Alternate the mowing direction. This helps disperse clippings over the lawn for even fertilization.

If the finished lawn appearance is unsatisfactory, try one or more of the following:

- Sharpen the blade.
- Walk at a slower pace while mowing.
- Raise the cutting height on your lawn mower.
- Cut the grass more frequently.
- Overlap cutting swaths instead of cutting a full swath with each pass.
- Mow across marginal areas a second time.
- Set the cutting height on the front wheels one notch lower than the rear wheels.

Cutting Leaves

- After cutting the lawn, make sure that half of the lawn shows through the cut leaf cover. You may need to make one or more passes over the leaves.
- For light leaf coverage, set all the wheels at the same cutting height setting.
- If there are more than five inches (12.7 cm) of leaves on the lawn, set the front wheels one or two notches higher than the rear wheels. This makes it easier to feed the leaves under the lawn mower deck.
- Slow down your mowing speed if the lawn mower does not cut the leaves finely enough.
- If you mow over oak leaves, you can add lime to the grass in the spring to reduce the acidity of the leaves.

Maintenance

Recommended Maintenance Schedule

Service Item	Service Operation	Each Use	5 Hours	25 Hours	50 Hours	100 Hours
Engine Oil	Check the engine oil before each use.	X				
	Drain and fill the engine crankcase with fresh oil after first five hours of operation. Thereafter, change every 50 operating hours or yearly. Change the oil every 25 operating hours when operating the lawn mower under a heavy load or in high temperatures.				X	
Housing	Clean built-up grass clippings and dirt.	X				
Fasteners	Check the blade and the engine mounting fasteners. Keep all fasteners tight to keep the lawn mower in safe working condition.		X			
Spark Plug	Inspect the spark plug every 25 operating hours and replace it if necessary. Replace the spark plug every 100 operating hours or yearly.			X		
Air Filter	Clean the air filter pre-cleaner every 25 operating hours or yearly. Clean or replace the paper cartridge every 100 operating hours or yearly. Clean or replace the air filter more frequently in dusty operating conditions.			X		
Lubrication	Grease the grease grease fittings.			X		
BBC shield	Remove the BBC shield and brush or blow out debris from the inside of the shield and around all the parts.			X		
Blade	Sharpen or replace the blade; maintain it more frequently if the edge dulls quickly in rough or sandy operating conditions.				X	
Blade Brake	Check the stopping time every 50 operating hours or at the start of each mowing season. The blade must stop within three seconds of releasing the bail; if it does not, see your Authorized Service Dealer for repair.				X	
Self-propel Drive	Adjust the cable and grease the rear-height adjustor brackets.				X	
Fuel System	Check for leaks and/or a deteriorating fuel hose. Replace it if necessary.				X	
Belt Cover	Remove and clean grass, clippings and debris from under cover.				X	

Service Item	Service Operation	Each Use	5 Hours	25 Hours	50 Hours	100 Hours
Cooling System	Clean grass, clippings, and debris from the engine air cooling fins and starter. Clean it more frequently in dirty operating conditions.					X
Throttle	Adjust as necessary.					
Fuel Tank	Empty the fuel tank before certain repairs as directed or before storage.					

CAUTION

POTENTIAL HAZARD
- **If you leave the wire on the spark plug, someone could start the engine.**

WHAT CAN HAPPEN
- **Someone accidentally starting the engine could seriously injure you or other bystanders.**

HOW TO AVOID THE HAZARD
- **Disconnect the wire from the spark plug before you do any maintenance. Set the wire aside so that it does not accidentally contact the spark plug.**

Checking the Engine Oil Level

Before you use the lawn mower, make sure that the oil level is between the *Add* and the *Full* marks as shown on the dipstick (Fig. 5). If the oil level is below the *Add* mark, add oil. Refer to *Filling the Crankcase with Oil* on page 7.

Changing the Engine Oil

Change the oil after the first five operating hours and then after every 50 operating hours or every season. Run the engine just before changing the oil to warm the oil. Warm oil flows better and carries more contaminants.

Note: Change the oil after every 25 operating hours when operating under heavy load or in high temperatures.

WARNING

POTENTIAL HAZARD
- **Tipping the lawn mower may cause the fuel to leak from the carburetor or the fuel tank.**

WHAT CAN HAPPEN
- **Gasoline is extremely flammable, highly explosive and under certain conditions can cause personal injury or property damage.**

HOW TO AVOID THE HAZARD
- **Avoid fuel spills by running the engine dry or removing gasoline with a hand pump; never siphon.**

Draining the Oil above the Lawn Mower Deck

Note: Toro recommends this procedure for draining the engine oil.

1. Disconnect the wire from the spark plug (Fig. 8).

2. Drain the gasoline from the fuel tank; refer to steps 3 and 4 of *Emptying the Fuel Tank* on page 23.

3. Remove the dipstick from oil fill tube and place a drain pan next to the left side of the lawn mower.

4. Tip the lawn mower onto its **left** side, allowing the oil to drain into the drain pan (Fig. 16).

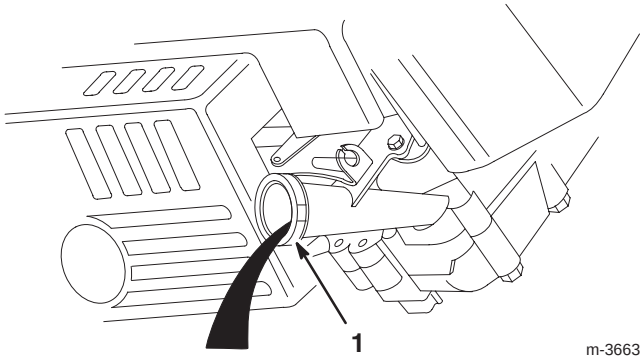

Figure 16

1. Oil fill tube

5. Turn the lawn mower upright.

6. Fill the crankcase with fresh oil to the *Full* mark on the dipstick. Refer to *Filling the Crankcase with Oil* on page 7**.**

7. Wipe up any spilled oil.

8. Connect the wire onto the spark plug.

9. Recycle the used oil according to local codes.

Draining the Oil below the Lawn Mower Deck

Note: You need a 3/8-inch ratchet extension to perform this procedure.

WARNING

POTENTIAL HAZARD
- **The blade is sharp.**

WHAT CAN HAPPEN
- **Contact with a sharp blade can cause serious personal injury.**

HOW TO AVOID THE HAZARD
- **Wear gloves or wrap the sharp edges of the blade with a rag.**

1. Disconnect the wire from the spark plug (Fig. 8).

2. Drain the gasoline from the fuel tank; refer to steps 3 and 4 of *Emptying the Fuel Tank* on page 23.

3. Tip the lawn mower onto its **left** side and secure it to prevent it from falling.

4. Place a drain pan under the lawn mower.

5. Remove the oil drain plug, return the lawn mower to its operating position, and allow the oil to drain into the drain pan (Fig. 17).

IMPORTANT: You may need to move the blade to get to the oil drain plug.

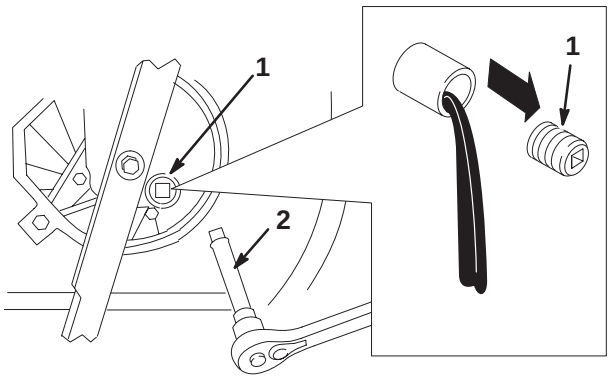

Figure 17

1. Oil drain plug
2. 3/8-inch Ratchet extension

6. Tip the lawn mower onto its **left** side and install the oil drain plug.

7. Fill the crankcase with fresh oil to the *Full* mark on the dipstick. Refer to *Filling the Crankcase with Oil* on page 7**.**

8. Wipe up any spilled oil.
9. Connect the wire onto the spark plug.
10. Recycle the used oil according to local codes.

Cleaning the Underside of the Lawn Mower Housing

To ensure best performance, keep the underside of the lawn mower housing clean. Be especially careful to keep the kickers free of debris (Fig. 18).

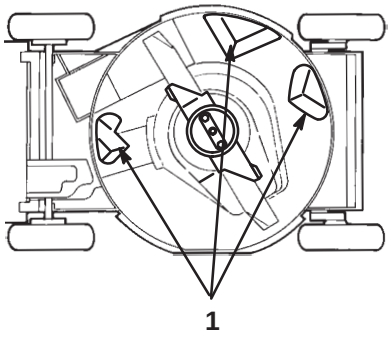

Figure 18

1. Kickers

Washing Method

1. Position the lawn mower on a flat, concrete or asphalt surface near a garden hose.
2. Start the engine.
3. Hold the running garden hose at handle level and direct the water to flow on the ground just in front of the right rear tire (Fig. 19).

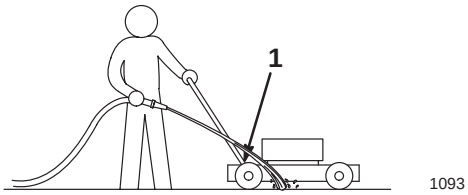

Figure 19

1. Rear right wheel

Note: The blade will draw in water and wash out clippings. Let the water run until you no longer see clippings being washed out from under the housing.

4. Stop the engine and wait for all moving parts to stop.
5. Turn off the garden hose.
6. Start the lawn mower and let it run for a few minutes to dry out the moisture on the lawn mower and its components.
7. While the engine is running, engage and disengage the blade brake system and the traction drive several times to dry them out.

Scraping Method

If washing does not remove all the debris from under the lawn mower, tip it and scrape it clean.

1. Disconnect the wire from the spark plug (Fig. 8).
2. Drain the gasoline from the fuel tank; refer to steps 3 and 4 of *Emptying the Fuel Tank* on page 23.

WARNING

POTENTIAL HAZARD
- **Gasoline is extremely flammable, highly explosive and under certain conditions can cause personal injury or property damage.**

WHAT CAN HAPPEN
- **Tipping the lawn mower may cause fuel leakage from the carburetor or fuel tank.**

HOW TO AVOID THE HAZARD
- **Avoid fuel spills by running the engine dry or removing gas with a hand pump; never siphon.**

3. Tip the lawn mower onto its **left** side.
4. Remove dirt and grass clippings with a hardwood scraper. Avoid burrs and sharp edges.
5. Turn the lawn mower upright.
6. Fill the gas tank.
7. Connect the spark plug wire.

Servicing the Air Filter

Clean the air filter pre-cleaner after every 25 operating hours or every season. Clean the paper cartridge after every 100 operating hours or every season. Clean more frequently in dusty or dirty operating conditions. Replace the air cleaner parts if they are very dirty.

Do not operate the engine without the air filter element; extreme engine wear and damage can occur.

1. Stop the engine and wait for all moving parts to stop.
2. Disconnect the wire from the spark plug (Fig. 8).
3. Remove the two knobs that secure the air filter cover to the engine (Fig. 20).

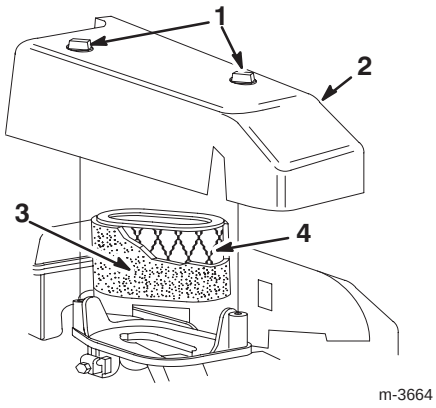

Figure 20

1. Knobs
2. Cover
3. Foam pre-cleaner
4. Paper cartridge

4. Lift the cover off and clean it thoroughly.

5. Carefully remove the pre-cleaner. If the pre-cleaner is dirty, carefully wash it in a solution of liquid soap and warm water. Rinse the pre-cleaner in clear water. Allow it to dry thoroughly before using.

6. If the paper cartridge is dirty, clean the paper filter by tapping it **gently** on a flat surface. If it is very dirty, replace it.

IMPORTANT: Do not oil the pre-cleaner or the paper cartridge. Do not use pressurized air to clean the paper cartridge.

7. Install the pre-cleaner over the paper cartridge.

8. Install the air cleaner cover and tighten it securely in place with the two knobs.

Replacing the Spark Plug

Remove the spark plug every 25 operating hours and check its condition. Replace the spark plug every 100 operating hours or yearly. Use a *Champion RC12YC* spark plug or equivalent.

1. Stop the engine and wait for all moving parts to stop.

2. Disconnect the wire from the spark plug (Fig. 8).

3. Clean around the spark plug.

4. Remove the spark plug from the cylinder head.

IMPORTANT: Replace a cracked, fouled, or dirty spark plug. Do not clean the electrodes because grit entering the cylinder can cause engine damage.

5. Set the gap on the new plug to 0.020 in. (0.50 mm) (Fig. 21).

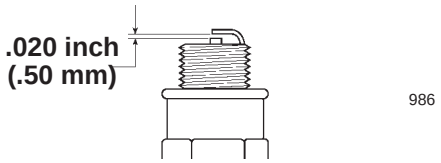

Figure 21

6. Install the spark plug and the gasket seal.

7. Torque the spark plug to 14 ft-lb (19 N·m).

8. Connect the wire to the spark plug.

Lubricating the Lawn Mower

After every 25 operating hours or yearly, lubricate the front and rear wheels.

1. Apply two or three drops of light oil on the inside and outside of all wheel bolts.

2. Spin the wheels to distribute the oil into the bushings. Wipe up any excess oil.

3. Move the rear wheel height-of-cut levers to the *C* setting.

4. Wipe the grease fittings with a clean rag.

5. Install a grease gun onto each fitting and gently apply two or three pumps of #2 multi-purpose lithium base grease (Fig. 22).

IMPORTANT: Apply the grease using excess pressure may damage the seals and prevent the free wheel clutch from operating properly.

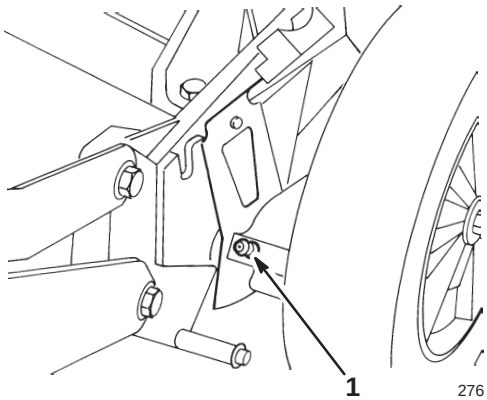

Figure 22

1. Grease fitting

Cleaning under the Blade Brake Clutch (BBC) Shield

Clean the blade brake clutch shield every 25 operating hours or yearly at a minimum to prevent the blade from stalling while you mow.

1. Stop the engine and wait for all moving parts to stop.
2. Disconnect the wire from the spark plug (Fig. 8).
3. Drain the gasoline from the fuel tank; refer to steps 3 and 4 of *Emptying the Fuel Tank* on page 23.
4. Tip the lawn mower on its **left** side.
5. Remove two blade nuts, the anti-scalp cup, the accelerator, the blade, the blade spacer, and three bolts and washers that secure the BBC shield to the lawn mower deck (Fig. 23).

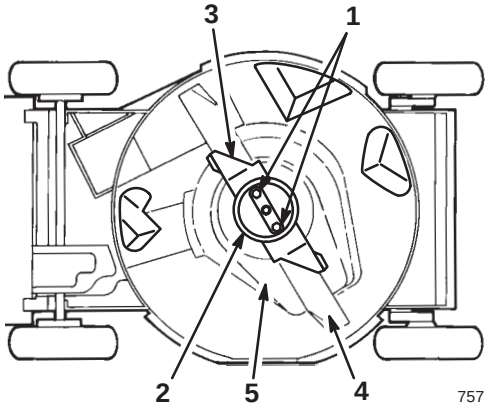

Figure 23

1. Blade nuts
2. Anti-scalp cup
3. Accelerator
4. Blade
5. BBC shield

6. Brush or blow out debris from the inside of the shield and around all the parts.
7. Install the BBC shield with the three bolts and washers, the blade spacer, the blade, the accelerator, the anti-scalp cup, and the two blade nuts. Torque the blade nuts to 15 to 27 ft-lb (20 to 37 N·m).
8. Connect wire to the spark plug.

Maintaining the Blade

A straight, sharp blade provides the best cutting performance. Regularly inspect and sharpen the blade.

WARNING

POTENTIAL HAZARD
- **The blade is sharp.**

WHAT CAN HAPPEN
- **Contact with a sharp blade can cause serious personal injury.**

HOW TO AVOID THE HAZARD
- **Wear gloves or wrap the sharp edges of the blade with a rag.**

1. Stop the engine and wait for all moving parts to stop.
2. Disconnect the wire from the spark plug (Fig. 8).

WARNING

POTENTIAL HAZARD
- **Gasoline is extremely flammable, highly explosive and under certain conditions can cause personal injury or property damage.**

WHAT CAN HAPPEN
- **Tipping the lawn mower may cause fuel leakage from the carburetor or fuel tank.**

HOW TO AVOID THE HAZARD
- **Avoid fuel spills by running the engine dry or removing gas with a hand pump; never siphon.**

3. Drain the gasoline from the fuel tank; refer to steps 3 and 4 of *Emptying the Fuel Tank* on page 23.
4. Tip the lawn mower on its left side (Fig. 24).

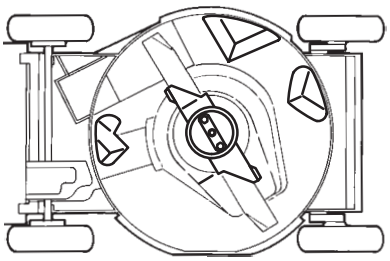

Figure 24

Inspecting the Blade

Carefully examine the blade for sharpness and wear, especially where the flat and the curved parts meet (Fig. 25A). Because sand and abrasive material can wear away the metal that connects the flat and curved parts of

the blade, check the blade before using the lawn mower. If you notice a slot or wear (Figs. 25B and 25C), replace the blade; refer to *Removing the Blade* on page 21.

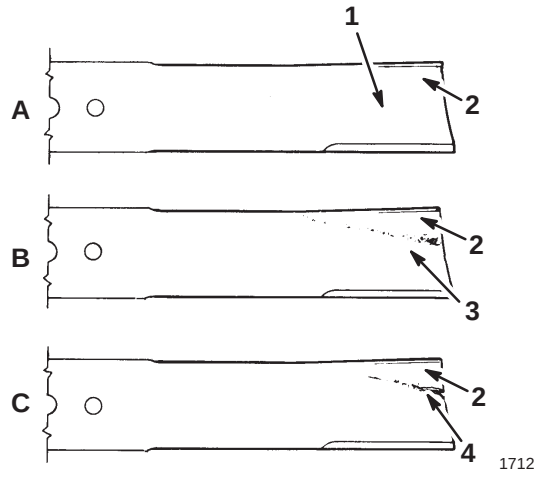

Figure 25

1. Flat part of the blade
2. Sail
3. Wear
4. Slot formed

Note: For the best performance, install a new blade before the cutting season begins. During the year, file down any small nicks to maintain the cutting edge.

DANGER

POTENTIAL HAZARD
- **A worn or damaged blade could break and a piece of the blade could be thrown into the operator's or bystander's area.**

WHAT CAN HAPPEN
- **A thrown piece of the blade could cause serious personal injury or death to the operator or bystanders.**

HOW TO AVOID THE HAZARD
- **Inspect the blade periodically for wear or damage.**
- **Replace a worn or damaged blade.**

Removing the Blade

1. Grasp the end of the blade using a rag or a thickly padded glove.

2. Remove the two blade nuts, the anti-scalp cup, the accelerator, and the blade (Fig. 23).

Sharpening the Blade

File the top side of the blade to maintain its original cutting angle (Fig. 26A) and inner cutting edge radius (Fig. 26B).

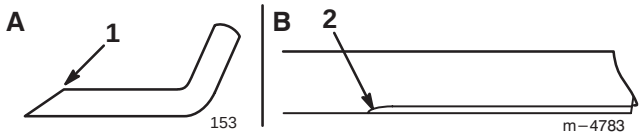

Figure 26

1. Sharpen at this angle only
2. Maintain the original radius here

Note: The blade will remain balanced if you remove the same amount of material from both cutting edges.

Balancing the Blade

1. Check the balance of the blade by placing the center hole of the blade over a nail or screwdriver shank clamped horizontally in a vise (Fig. 27).

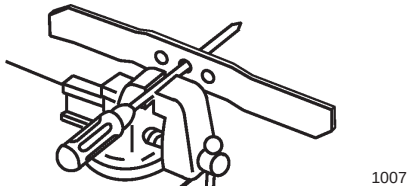

Figure 27

Note: You can also check the balance using a commercially manufactured blade balancer.

2. If either end of the blade rotates downward, file that end (not the cutting edge or the end near the cutting edge). The blade is properly balanced when neither end drops.

Installing the Blade

1. Install the blade, the accelerator, the anti-scalp cup, and the two blade nuts (Fig. 23).

IMPORTANT: The sail part of the blade must point toward the top of the mower housing.

2. Torque the blade nuts to 15 to 27 ft-lb (20 to 37 N·m).

WARNING

POTENTIAL HAZARD
- **Operating the lawn mower without the accelerator in place could cause the blade to flex, bend, or break.**

WHAT CAN HAPPEN
- **A broken blade could cause serious injury or death to the operator or bystanders.**

HOW TO AVOID THE HAZARD
- **Do not operate the lawn mower without the accelerator.**

Adjusting the Self-propel Drive Cable

If the lawn mower does not self-propel or has a tendency to creep forward when traction is disengaged, adjust the wheel drive control knob on the rear of the gear box (Fig. 28).

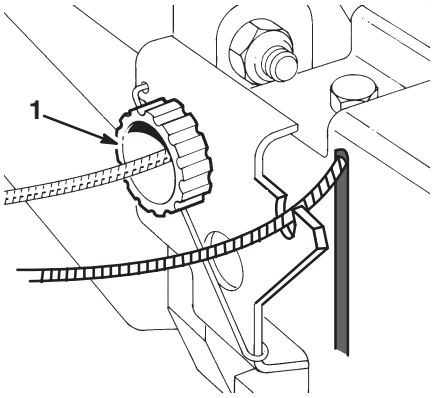

Figure 28

1. Knob

1. Rotate the control knob clockwise 1/2 turn if the lawn mower does not self-propel. If the lawn mower creeps forward, rotate the knob 1/2 turn counterclockwise to loosen the belt.
2. Adjustment is correct when (1) the lawn mower does not creep forward when you disengage the traction and (2) the control bar is at a comfortable operating distance from the handle for the operator's hand when disengaging and engaging the self-propel drive.

Note: Do not overadjust the cable. The cable should be just tight enough to make the wheels turn when the control bar is at a distance from the handle that is comfortable for operator's hand (about a one-inch gap). Overadjusting the cable may require excessive operator effort to engage or disengage self-propel drive.

If you need help, contact your Authorized Service Dealer.

Cleaning under the Belt Cover

Keep the area under the belt cover free of debris.

1. Stop the engine and wait for all moving parts to stop.
2. Disconnect the wire from the spark plug (Fig. 8).
3. Remove the bolts that secure the belt cover to the lawn mower housing (Fig. 29).

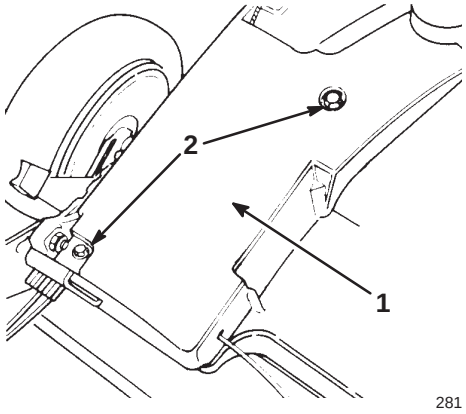

Figure 29

1. Belt cover
2. Bolt

4. Lift off the cover and brush out all debris from the belt area.
5. Install the belt cover.

Adjusting the Throttle

You may need to adjust the throttle control if the engine does not start or stop properly. Whenever you install a new throttle control cable, adjust the throttle.

1. Stop engine and wait for all moving parts to stop.
2. Disconnect the wire from the spark plug (Fig. 8).
3. Loosen the cable clamp screw until the throttle cable slides (Fig. 30).

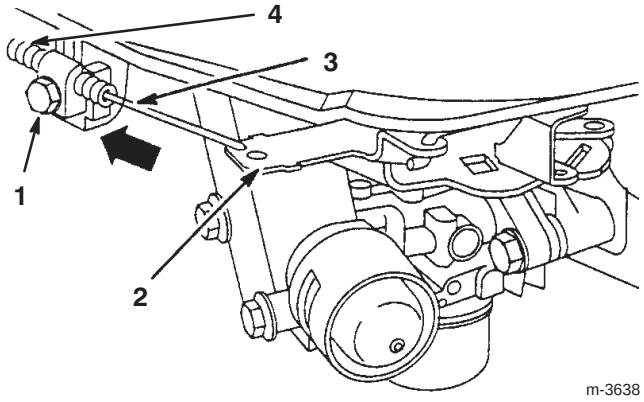

Figure 30

1. Cable clamp screw
2. Governor control lever
3. Throttle cable
4. Casing

4. Move the throttle control to the (*Fast*) position.

5. Move the governor control lever, the throttle cable, and the casing in the direction of the arrow as far as possible (Fig. 30).

6. Tighten the cable clamp screw to lock the adjustment in place.

Emptying the Fuel Tank

1. Stop the engine and wait for it to cool down.

2. Disconnect the wire from the spark plug (Fig. 8).

3. Remove the cap from the fuel tank (Fig. 6).

4. Use a hand pump to syphon the fuel into a clean approved gasoline container.

5. Connect the wire to the spark plug.

6. Run the engine until it stops.

7. Start the engine again to make sure that all the gasoline is out of the carburetor.

Troubleshooting

Toro designed and built your lawn mower for trouble-free operation. Check the following components and items carefully. If a problem continues, see your Authorized Service Dealer.

PROBLEM	CORRECTIVE ACTION
Engine will not start	1. Fill the fuel tank with fresh gasoline. 2. Press the primer three times. 3. Connect the wire to the spark plug. 4. Clean the spark plug, check the spark plug gap, and replace the spark plug if it is damaged.
Engine starts hard or loses power	1. Drain and fill the fuel tank with fresh gasoline. 2. Clean the gasoline cap vent hole. 3. Clean the air filter. 4. Clean the lawn mower discharge chute. 5. Clean the underside of the lawn mower deck. 6. Clean the spark plug, check the spark plug gap, and replace the spark plug if it is damaged. 7. Check the engine oil.
Engine runs rough	1. Connect the spark plug wire. 2. Clean the spark plug, check the spark plug gap, and replace the spark plug if it is damaged. 3. Clean the air filter.

PROBLEM	CORRECTIVE ACTION
Lawn mower or engine vibrates excessively	1. Balance the blade. 2. Tighten the blade mounting nut. 3. Clean the lawn mower discharge chute. 4. Clean the underside of the lawn mower deck. 5. Tighten the engine mounting bolts.
Uneven cutting pattern	1. Place all four wheels at the same height. 2. Sharpen and balance the blade. 3. Change the mowing pattern. 4. Clean the underside of lawn mower deck.
Discharge chute plugs	1. Raise the cutting height. 2. Allow the grass to dry before mowing. 3. Clean the underside of lawn mower deck.
Lawn Mower will not self-propel	1. Adjust the self-propel drive cable. 2. Clean the debris under the belt cover.

Storage

To prepare the lawn mower for off-season storage, perform the recommended maintenance procedures. Refer to *Maintenance* on page 15.

Store the lawn mower in a cool, clean, dry place. Cover the lawn mower to keep it clean and protected.

Preparing the Fuel System

WARNING

POTENTIAL HAZARD
- **Gasoline can vaporize if you store it over long periods of time.**

WHAT CAN HAPPEN
- **Vaporized gasoline can explode if it comes into contact with an open flame.**

HOW TO AVOID THE HAZARD
- **Do not store gasoline over long periods of time.**
- **Do not store the lawn mower with gasoline in the fuel tank or the carburetor in an enclosure with an open flame. (For example, a furnace or a water heater pilot light.)**
- **Allow the engine to cool before storing it in any enclosure.**

Empty the fuel tank when mowing the last time before storing the lawn mower.

1. Run the lawn mower until the engine stops from running out of fuel.
2. Prime the engine and start it again.
3. Allow the engine to run until it stops. When you can no longer start the engine, it is sufficiently dry.

Preparing the Engine

1. While the engine is still warm, change the oil in the crankcase. Refer to *Changing the Engine Oil* on page 16.
2. Remove the spark plug (Fig. 8).
3. Using an oil can, add about one tablespoon of oil to the crankcase through the spark plug hole.
4. Slowly rotate the engine several times, using the starter rope, to distribute the oil.
5. Install the spark plug but **do not** install the spark plug wire.

General Information

1. Clean the lawn mower housing. Refer to *Cleaning the Underside of the Lawn Mower Housing* on page 18.
2. Clean any dirt and chaff from the cylinder, cylinder head fins, and blower housing.
3. Remove grass clippings, dirt, and grime from the external parts of the engine, the shrouding, and the top of the lawn mower housing.

4. Check the condition of the blade. Refer to *Maintaining the Blade* on page 20.
5. Tighten all nuts, bolts, and screws.
6. Lubricate the wheels. Refer to *Lubricating the Lawn Mower* on page 19.
7. Touch up all rusted or chipped paint surfaces with paint available from an Authorized Service Dealer.

Removing from Storage

1. Check and tighten all fasteners.
2. Remove the spark plug (Fig. 8) and spin the engine rapidly using the starter to remove the excess oil from the cylinder.
3. Clean the spark plug or replace it if it is cracked, broken, or if the electrodes are worn.
4. Install the spark plug and torque it to 14 ft-lb (19 N·m).
5. Perform the recommended maintenance procedures; refer to *Maintenance* on page 15.
6. Fill the fuel tank (Fig. 6) with fresh gasoline.
7. Check the engine oil level. Refer to *Checking the Engine Oil Level* on page 16.
8. Connect the wire onto the spark plug.

Accessories

You may purchase the following accessories for your lawn mower from an Authorized Service Dealer:

- **Rear Bag Kit**—Install the discharge tunnel and rear mounting grass bag to convert your Recycler® lawn mower into a rear-bagging lawn mower (Fig. 31). Includes the discharge tunnel plug.

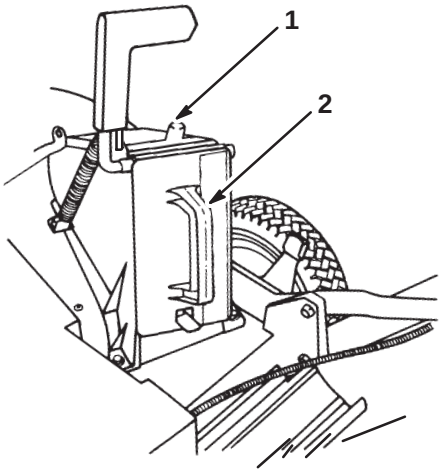

Figure 31

1. Discharge tunnel
2. Discharge tunnel plug

- **Side Discharge Kit**—Installs in seconds. It is rear mounted in place of the grass bag or the discharge tunnel plug. It disperses clippings while trimming on both sides (Fig. 32).

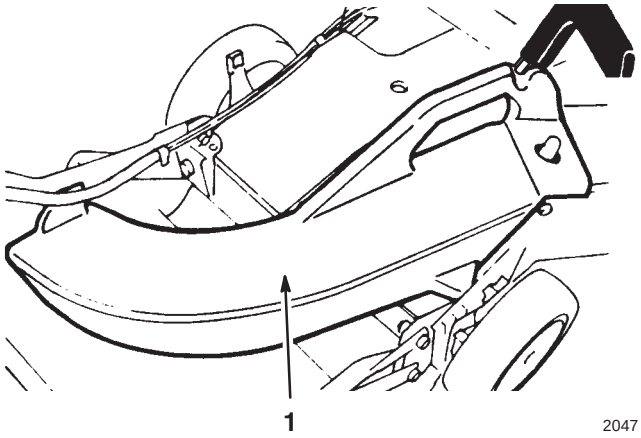

Figure 32

1. Side discharge chute

- **Dethatcher Kit**—Installs in minutes. It is front-mounted for easy maneuverability (Fig. 33). The spring tines loosen thatch for clean and convenient vacuuming into the grass bag.

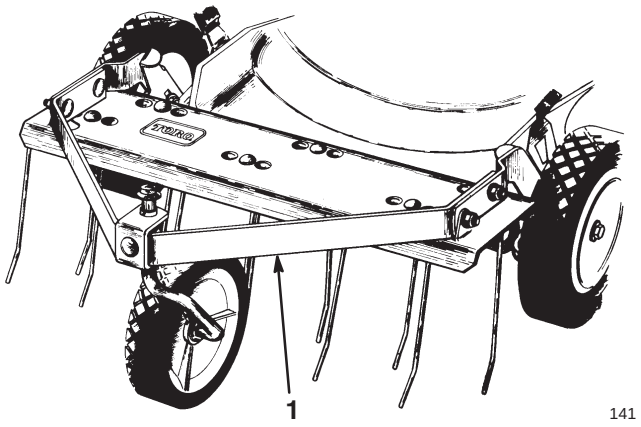

Figure 33

1. Dethatcher attachment

It is Toro's policy to design and produce high quality products. To ensure customer satisfaction, Toro has extensive warranty coverage on its products. Your Toro GTS Engine powered product has two warranty statements covering it. The Toro Total Coverage Guarantee is our standard warranty statement and is printed on the last page of this manual.

In addition to The Toro Total Coverage Guarantee, we are so confident that the Toro GTS Engine will provide a high level of performance and durability that we are providing a *Starting Guarantee!* Please read the details of this additional warranty coverage printed below.

THE TORO STARTING GUARANTEE

A Five Year Limited Warranty
On All Toro GTS–5 Engines

What Is Covered?

The Toro Company guarantees that your Toro GTS–5 Engine will start on the first or second pull for five years from the date of purchase—if you provide the routine maintenance it requires—or we will fix it. The cost of parts and labor are included, but you must pay transportation costs. This covers Toro GTS–5 rotary mower and snow product engines.

What Must You Do To Keep The Warranty In Effect?

You must maintain your Toro GTS–5 Engine by following the maintenance schedule detailed in the operator's manual, at your expense. You must record this work in the maintenance chart provided in your owner's manual and keep your proof of purchase.

How Do You Get Service?

If the starting performance of your Toro GTS–5 Engine should diminish to the point where it will not start in one or two pulls by a normal, able–bodied adult, you should follow the procedures below:

1. Contact any Authorized Toro Service Dealer, Toro Master Service Dealer, or Toro Distributor (the Yellow Pages of your telephone directory is a good reference source).

2. He will either instruct you to return the product to him or recommend another Authorized Toro Service outlet which might be more convenient.

3. Bring the product, your maintenance records, and proof of purchase to the Service Dealer.

If, for any reason, you are dissatisfied with the Dealer's analysis of your engine's starting condition, or the assistance provided, please feel free to contact us:

Toro Customer Service Department
8111 Lyndale Avenue South
Minneapolis, Minnesota 55420

What Does This Warranty Not Cover?

This Warranty does not cover:

1. Any repairs on products used commercially.

2. Normal maintenance including replacement of spark plugs, air filter, fuel filter, and carburetor adjustments.

3. Oil change and lubrication.

4. Repairs or adjustments due to:

a. Failure to follow proper maintenance procedures;

b. Rotary mower blade striking an object;

c. Contaminants in the fuel system;

d. Improper fuel or fuel mixture (consult your owner's manual if in doubt);

e. Failure to drain the fuel system prior to any period of non–use over three months;

f. Operation misuse, neglect or accidents;

g. Repairs or attempted repairs by anyone other than an Authorized Toro Service Dealer.

5. Special operational conditions where starting may require more than two pulls, including:

a. First time starts after extended period of non–use or seasonal storage;

b. Cool temperature starts such as those found in early spring and late fall may require an additional pull or two (applies to rotary products only);

c. Improper starting procedures. If you are having difficulty starting your unit, please check the operator's manual to ensure you are using the correct starting procedures. This can save an unnecessary visit to a Service Dealer.

All warranty repairs reimbursable under this warranty must be performed by an Authorized Toro Service Dealer using Toro approved replacement parts.

The above remedy through repair by an Authorized Toro Service Dealer is the purchaser's sole remedy.

How Does State Law Relate To This Warranty?

There is no other express warranty except for The Toro Total Coverage Guarantee. All implied warranties of merchantability (that the product is fit for ordinary use) and fitness for use (that the product is fit for a particular purpose) are limited to the duration of the express warranty.

Some states do not allow limitation on how long implied warranties last, so the above exclusion may not apply to you.

The Toro Company is not liable for indirect, incidental or consequential damages in connection with the use of the product, including any cost or expense of providing substitute equipment or service during periods of malfunction or non–use.

Some states do not allow exclusions of incidental or consequential damages, so the above exclusion may not apply to you.

This warranty gives you specific legal rights, and you may also have other rights which vary from state to state.

Guaranteed to Start Maintenance Record

To keep the starting guarantee in effect, you must perform the following maintenance after every 25 operating hours, more often in dusty and dirty conditions. Follow the procedures in this Operator's Manual and record information on this chart.

Date	Hours Used	Air Cleaner Service	Change Oil Doesn't Apply to 2–Cycle	Lubricate Wheels	Check Spark Plug	Mower Storage

Federal and California Emission Control Warranty Statement

A Two-Year Limited Warranty

Your Warranty Rights and Obligations

The U.S. Environmental Protection Agency (EPA), the California Air Resources Board (CARB), Toro, and Toro Warranty Company are pleased to explain the emission control system warranty on your 2000 and later small off-road engine (SORE). In California, new small off-road engines must be designed, built and equipped to meet the State's stringent anti-smog standards. In other states, new 1997 and later model year non-road engines must be designed, built and equipped, at the time of sale, to meet the U.S. EPA regulations for small non-road engines. The equipment engine must be free from defects in materials and workmanship, which cause it to fail to conform with U.S. EPA standards, for the first two years of engine use from the date of sale to the ultimate purchaser. Toro and Toro Warranty Company must warrant the emission control system on your engine for the period of time listed above, provided there has been no abuse, neglect, or improper maintenance of your small off-road engine.

Your emission control system may include parts such as the carburetor or fuel injection system, the ignition system, and catalytic converter. Also included may be hoses, belts, connectors, and other emission related assemblies.

Where a warrantable condition exists, Toro and Toro Warranty Company promise to repair your engine at no cost to you, including diagnosis, parts, and labor.

Manufacturer's Warranty Coverage

Toro and its affiliate, Toro Warranty Company, pursuant to an agreement between them, jointly warrant small off-road engines for two years from the date of delivery. If any emission-related part on your engine is defective in materials or workmanship, we will repair or replace the part, free of charge.

Owner Responsibilities

As the engine owner, you are responsible for the performance of the required maintenance listed in your operator's manual. We recommend that you retain all receipts covering maintenance on your equipment, but we cannot deny warranty solely for the lack of receipts or for your failure to ensure the performance of all scheduled maintenance.

Any replacement part or service that is equivalent in performance and durability may be used in non-warranty maintenance or repairs, and shall not reduce our warranty obligation.

As the engine owner, you should be aware that we may deny you warranty coverage if your engine or a part has failed due to abuse, neglect, improper maintenance, or unapproved modifications or parts.

You are responsible for presenting your equipment engine to an Authorized Service Dealer as soon as a problem exists. The warranty repairs should be completed in a reasonable amount of time, not to exceed thirty (30) days.

If you have any questions regarding your warranty rights and responsibilities or if you need a referral to a Toro Service Dealer, please feel free to contact us at:

Customer Service Department
Toro Warranty Company
8111 Lyndale Avenue South
Bloomington, MN 55420-1196
612-888-8801
800-348-2424

Warranted Parts

The warranty period begins on the date the engine or equipment is delivered to a retail purchaser. Toro and Toro Warranty Company jointly warrant to the initial owner and each subsequent purchaser that the engine is free from defects in materials and workmanship, which cause the engine to fail to conform with applicable regulations, for a period of two years.

Failures caused by abuse, neglect, or improper maintenance are not covered. The use of add-on or modified parts can be grounds for disallowing a warranty claim. We are not liable to cover failures of warranted parts caused by the use of add-on or modified parts. We are liable for damages to other engine components caused by the failure of a warranted part still under warranty. The owner is responsible for the performance of the required maintenance, as defined in the operator's manual.

Any warranted part which is not scheduled for replacement as required maintenance, or which is scheduled only for regular inspection to the effect of "repair or replace as necessary" shall be warranted for the warranty period. Any warranted part which is scheduled for replacement as required maintenance shall be warranted for the period of time up to the first scheduled replacement point for that part. Coverage under this warranty extends only to the parts listed below (the emissions system parts) to the extent that these parts were present on the engine when purchased.

1. Fuel Metering System
   - Cold start enrichment system including the choke mechanism or priming system
   - Fuel pump
   - Air fuel ratio feedback system
   - Carburetor and internal parts
   - Fuel injection system
2. Air Induction System
   - Air cleaner
   - Reed intake system
   - Intake manifold
   - Controlled hot air intake system
3. Ignition System
   - Spark plug(s)
   - Ignition coils and electronics
   - Advance/retard mechanisms
4. Catalytic Converter/Thermal Reactor System
   - Catalytic converter
   - Thermal reactor
   - Exhaust manifold
5. Air Injection System
   - Air injection system or pulse valve
   - Valves affecting distribution of air
6. Exhaust Gas Recirculation (EGR) System
   - EGR valve body and piping system connecting to the intake side of the engine
   - EGR control system
7. Particulate Controls
   - Traps, filters, precipitators, and any other device used to capture particulate emissions

8. Miscellaneous Items Used in the Above Systems
   - Vacuum, temperature, and time-sensitive valves and switches
   - Electronic controls
   - Hoses, connectors, and assemblies of same

How to Get Warranty Service

Should you feel your Toro Product requires warranty service, contact the dealer who sold you the product or any Authorized Service Dealer or Master Service Dealer. The Yellow Pages of your telephone directory is a good reference source. The dealer will either arrange service at his/her dealership or recommend another Authorized Service Dealer who may be more convenient. You may need proof of purchase (copy of registration card, sales receipt, etc.) for warranty validation. The owner shall not be charged for diagnostic labor which leads to the determination that a warranted part is defective, if the diagnostic work is performed at a warranty station.

General Conditions

Neither The Toro Company nor Toro Warranty Company is liable for indirect, incidental or consequential damages in connection with the use of the Toro Products covered by this warranty, except for damages to other engine components caused by the failure of a warranted part still under warranty. Some states do not allow exclusions of incidental or consequential damages, or limitations on how long an implied warranty lasts, so the above exclusions and limitations may not apply to you.

This warranty gives you specific legal rights, and you may also have other rights which vary from state to state.

Rev. 11/08/1999

Gas, Cordless, Electric, and 21" Commercial Duty Walk Mowers

The Toro Total Coverage Guarantee

A Full Warranty
(Limited Warranty for Commercial Use)

Conditions and Products Covered

The Toro Company and its affiliate, Toro Warranty Company, pursuant to an agreement between them, jointly promise to repair any Toro Product used for normal residential purposes* if defective in materials or workmanship or if it stops functioning due to the failure of a component. The following time periods apply from the date of purchase:

Products	Warranty Period
• Super Recycler® Walk Mowers	5 year full warranty
• VacuPower® Walk Mowers	5 year full warranty
• All Others	2 year full warranty

This warranty includes the cost of parts and labor, but you must pay transportation costs.

This warranty applies to all gas, cordless, and electric consumer walk power mowers.

* Normal residential purposes means use of the product on the same lot as your home. Use at more than one location is considered commercial use, and the commercial use warranty would apply.

Limited Warranty for Commercial Use

Toro Walk Power Mowers used for commercial, institutional, or rental use are warranted against defects in materials or workmanship. Components failing due to normal wear are not covered by this warranty. The following time periods apply from the date of purchase:

Products	Warranty Period	
	Engine	Entire Unit
• 21" Commercial Duty Walk Mowers	2 year limited	1 year limited
• All Others	45 day limited	45 day limited

Instructions for Obtaining Warranty Service

Should you feel your Toro Product contains a defect in materials or workmanship, contact the dealer who sold you the product or any Authorized Service Dealer or Master Service Dealer. The Yellow Pages of your telephone directory is a good reference source. The dealer will either arrange service at his/her dealership or recommend another Authorized Service Dealer who may be more convenient. You may need proof of purchase (copy of registration card, sales receipt, etc.) for warranty validation.

If for any reason you are dissatisfied with the Service Dealer's analysis of the defect in materials or workmanship or if you need a referral to a Toro Service Dealer, please feel free to contact us at:

Customer Service Department
Toro Warranty Company
8111 Lyndale Avenue South
Bloomington, MN 55420-1196
612-888-8801
800-348-2424

Owner Responsibilities

You must maintain your Toro Product by following the maintenance procedures described in the operator's manual. Such routine maintenance, whether performed by a dealer or by you, is at your expense.

Items and Conditions Not Covered

There is no other express warranty except for special emission system coverage on some products and the Toro Starting Guarantee on GTS Engine. This express warranty does not cover:

- Cost of regular maintenance service or parts, such as filters, fuel, lubricants, oil changes, spark plugs, blade sharpening, worn blade, cable/linkage adjustments, or brake and clutch adjustments.
- Any product or part which has been altered or misused or required replacement or repair due to accidents or lack of proper maintenance.
- Repairs necessary due to improper fuel, contaminants in the fuel system, or failure to properly prepare the fuel system prior to any period of non-use over three months.
- Repairs necessary due to improper battery care, electrical supply irregularities, or failure to properly prepare the mower prior to any period of non-use.
- Pickup and delivery charges.

All repairs covered by this warranty must be performed by an Authorized Toro Service Dealer using Toro approved replacement parts.

General Conditions

Repair by an Authorized Toro Service Dealer is your sole remedy under this warranty.

Neither The Toro Company nor Toro Warranty Company is liable for indirect, incidental or consequential damages in connection with the use of the Toro Products covered by this warranty, including any cost or expense of providing substitute equipment or service during reasonable periods of malfunction or non-use pending completion of repairs under this warranty. Some states do not allow exclusions of incidental or consequential damages, or limitations on how long an implied warranty lasts, so the above exclusions and limitations may not apply to you.

This warranty gives you specific legal rights, and you may also have other rights which vary from state to state.

Countries Other than the United States or Canada

Customers who have purchased Toro products exported from the United States or Canada should contact their Toro Distributor (Dealer) to obtain guarantee policies for your country, province, or state. If for any reason you are dissatisfied with your Distributor's service or have difficulty obtaining guarantee information, contact the Toro importer. If all other remedies fail, you may contact us at Toro Warranty Company.

Rev. 11/08/1999