Form No. 3323–764

Groundsmaster® 580–D

Traction Unit

Model No. 30581—200000001 and Up

Parts Catalog

Ordering Replacement Parts

To order replacement parts, please supply: the part number, the quantity, and the description of each part desired.

Understanding Reference Numbers

Each identified part in an illustration has a reference number. The reference number for a part also appears in the parts list, along with other information about the part.

This catalog uses two special reference number formats, one to indicate parts in a service assembly and another to indicate the quantity of a given part in an illustration.

Service Assembly Reference Numbers

Parts in service assemblies have reference numbers in the form **a:b.** The **a** represents the reference number of the entire service assembly and the **b** represents a sequential number unique to each part within the service assembly.

For example, a wheel assembly might be identified by reference number **6**, the tire by **6:1**, the valve by **6:2**, and the wheel by **6:3**. When you order the assembly identified by reference number 6, you receive all parts identified by reference numbers 6:1, 6:2, and 6:3. However, you may also order any part individually.

Reference numbers of this type appear in illustrations and in part lists.

Reference Numbers Indicating Quantity

In an illustration, if a reference number indicates more than one part, the reference number has the form **nX y.** The **n** represents the quantity of the part, the **X** is the multiplication symbol, and the **y** represents the reference number.

For example, in an illustration, the reference number **2X 37** means that two of the parts identified by reference number 37 are indicated.

© The TORO Company — 2000
All Rights Reserved

Contents

Description	Page
Seat Assembly	4
Seat Pivot and Bellows Assembly	5
Seat Suspension Assembly	6
Steering Tower Assembly	7
Power Steering Valve Assembly No. 92–9748	9
Steering Brake Assembly	10
Service Brake Assembly	11
Brake System Master Cylinder No. 69–2640	12
Traction Pedal and Cruise Control Assembly	13
Tool Box Assembly	14
Control Box Assembly	15
Diagnostic Display Assembly	16
Upper Control Panel Assembly	17
Lower Control Panel Assembly	18
Electrical Schematic	19
Controller Electrical Schematic	20
Operators Control Panel Electrical Schematic	21
Throttle Assembly	22
Lift Valve Installation Assembly	23
Lift Valve Assembly No. 69–1780	24
Counterbalance Manifold Assembly	25
Fuel Tank Assembly	27
Hydraulic Tank Assembly	28
Hydraulic Filter Assembly	29
Double Gear Pump No. 69–2050–03	30
Frame Assembly	31
Hydraulic System Diagnostic Panel Assembly	34
Hydraulic Line Clamps Assembly	35
Hydraulic Schematic	36
Front Wheel Assembly	37
Wheel Motor No. 69–3050	39
Planetary Gear Assembly No. 69–1730	40
Wheel Brake Assembly	41
Variable Displacement Pump Installation	42
Gear Pump and Flow Divider No. 69–2220	44
Variable Displacement Pump No. 93–9322	45
Cowl Assembly	47
Hood Assembly	48
Radiator and Oil Cooler Assembly	49
Engine Installation Assembly	51
Cylinder Head Assembly	53
Valve Mechanism Assembly	54
Rocker Cover and Camshaft Assembly	55
Crankcase Assembly	56
Flywheel Housing and Main Metal Assembly	57
Timing Gear Case and Timing Gear Assembly	58
Oil Pan and Oil Level Assembly	59
Piston and Connecting Rod Assembly	60
Crankshaft and Flywheel Assembly	61
Inlet and Exhaust Manifold Assembly	62
Oil System Assembly	63
Cooling System Assembly	64
Fuel Injection Pump Mount Assembly	65
Nozzle Assembly	66
Injection Pump Assembly	68
Governor Assembly	70
Feed Pump Assembly	72
Fuel Filter Assembly	73
Electrical Components Assembly	74
Alternator Assembly	75
Overhaul Gasket Kit Assembly	76
Fan Drive Assembly	78
Muffler and Air Cleaner Assembly	79
Air Cleaner Assembly No. 98–0800	80
Fuel/Water Filter Assembly	81
Battery Frame Assembly	82
PTO Manifold Assembly	83
Rear Axle Assembly	85
Hydraulic Cylinder Assembly No. 98–0661	87
Front Lift Arm Assembly	88
Hydraulic Cylinder Assembly No. 92–4971	89
Center Deck Model No. 30592 Carrier Frame Assembly	90
Center Deck Model No. 30592	91
Center Deck Model No. 30592 Left Wing Assembly	93
Center Deck Model No. 30592 Right Wing Assembly	94
Wing Deck Lift Assembly	96
Hydraulic Cylinder Assembly No. 74–2170	98
Wing Deck Latch Assembly	99
Wing Deck Lift Arm Assembly	100
Wing Deck Model No. 30591 LH and 30593 RH	101
Wing Deck Model No. 30591 LH and 30593 RH Drive Assembly	103
Hydraulic Motor Assembly No. 94–4907	104
Spindle Assembly	105
10” and 13” Foam Filled Tire Assemblies	106

Accessories

Description	Model / Part No.
Road Light Kit	30594
Left Cutting Unit	30591
92” Triflex Cutting Unit	30592
Right Cutting Unit	30593
Extra Traction Drive Tire	231–140
Foam Filled 12” Caster Tire	98–7329
Foam Filled 10.5 Caster Tire	93–5973
Shipping Bracket (for cutting unit)	30587
Air Conditioner	98–7315
Cold Start Kit	30590
Flow Combiner	30586
Mulcher Kit	30588

Part Description Abbreviations

Part descriptions in this catalog may include the following abbreviations.

Abbreviation	Meaning
AR	as required
ASM	assembly
CARR	carriage
DEG	degrees
FH	flat head
GA	gauge
HF	hex flange
HH	hex head
HHF	hex head flange
HLH	hex lag head
HJ	hex jam
HOC	height-of-cut
HS	hex socket
HSBH	hex socket button head
HSFH	hex socket flat head
HSH	hex socket head
HWH	hex washer head
HWHTF	hex washer head thread forming
INC	incorporated
LH	left hand
NI	nylon insert
PPH	Phillips pan head
PTH	Phillips truss head
PTO	power take off
RH	right hand
SFH	slotted fillister head
SHH	slotted hex head
SQH	square head
SHWH	slotted hex washer head
SPH	slotted pan head
SRH	slotted round head
STD	standard
TAP	self tapping
TTH	Torx truss head
WH	wing head

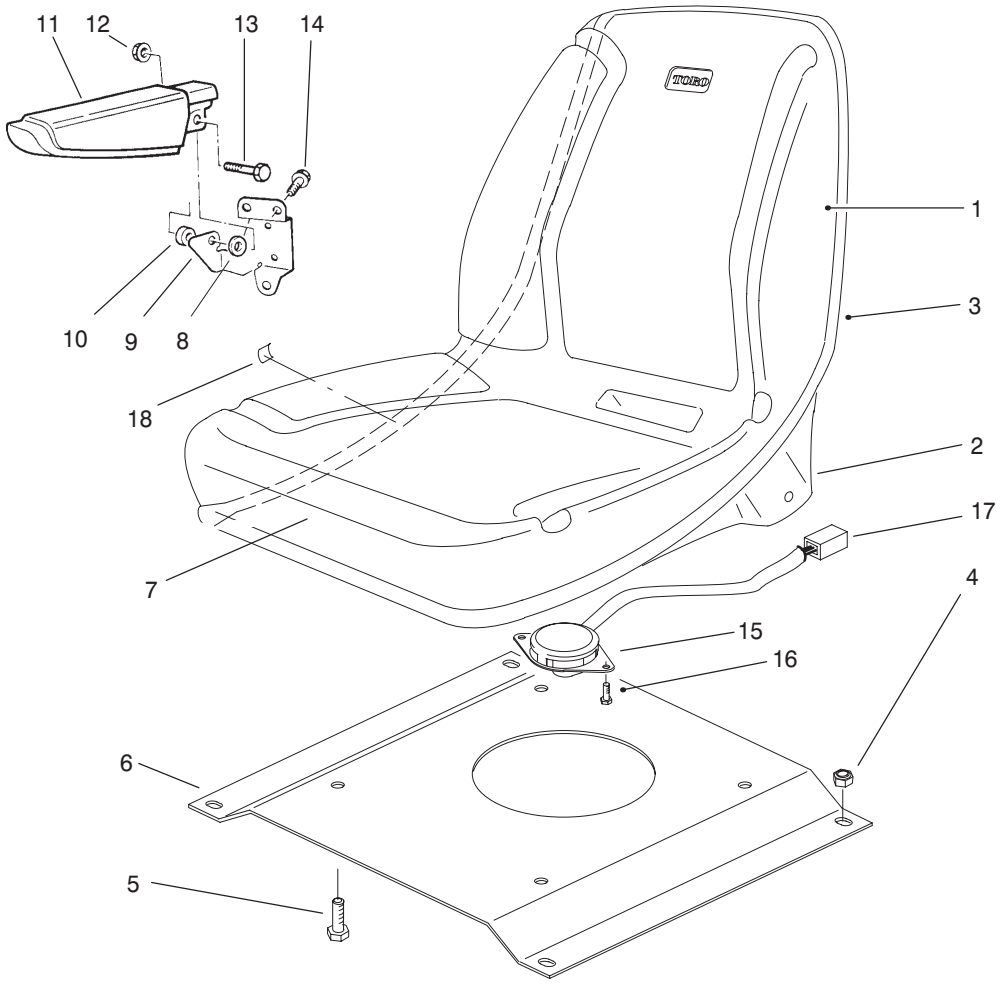

T–3335

Seat Assembly

Ref. No.	Part No.	Qty.	Description
1	99–8745	1	Seat ASM (Incl. Ref. #2, 3 & 7)
2	92–6534	1	Shell–Seat
3	351–78	1	Edging
4	3296–29	4	Nut–Lock
5	3234–5	4	Screw–HH
6	98–3048–03	1	Plate–Seat
7	92–6533	1	Cushion–Seat
8	3256–24	2	Washer–Flat
9	69–0770	1	Bracket–Arm Rest, RH
*	69–0760	1	Bracket–Arm Rest, LH
10	92–7301	2	Spacer
11	69–1180	2	Armrest
12	32128–19	2	Nut–HHF
13	323–9	2	Screw–HH
14	3234–14	6	Screw–HH
15	92–6282	1	Switch–Seat
16	3234–33	2	Screw–HH
17	98–7326	1	Harness–Wire, Seat Switch
18	351–80	1	Clip–Edging

Ref. No.	Part No.	Qty.	Description

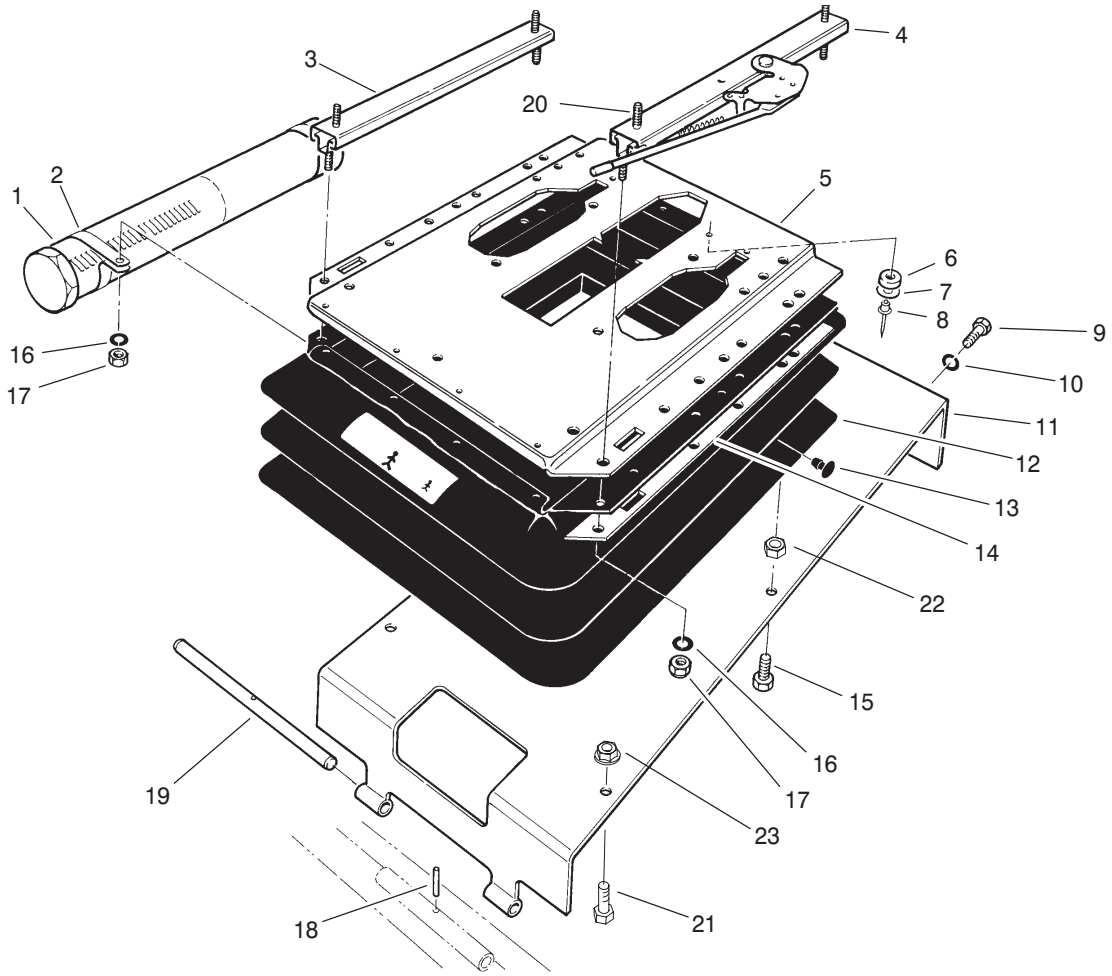

T–1279–1

Seat Pivot and Bellows Assembly

Ref. No.	Part No.	Qty.	Description
1	74–0720	1	Tube–Manual
2	2412–133	2	Clamp
3	66–8530	1	Track–Adjustment
4	82–9060	1	Track & Latch–Adjustment
5	71–2410	1	Plate–Suspension, Upper (Incl. Ref. #6)
6	71–2400	2	Bumper ASM (Incl. Ref. #7 & 8)
7	71–2380	2	Washer
8	71–2390	2	Rivet–Pop
9	323–6	2	Screw–HH
10	3253–21	2	Washer–Lock
11	83–6660–03	1	Support–Seat
12	71–2420	1	Bellows–Rubber
13	39–5710	21	Plug
14	40–3890	2	Trim
15	48–7780	2	Screw–HH
16	3256–23	4	Washer–Flat
17	3296–29	4	Nut–Lock
18	32121–4	1	Pin–Roll
19	27–4720	1	Pin–Pivot, Seat
20	3230–22	1	Bolt–CARR
21	33104–025	2	Screw–HHF
22	33015–00	2	Nut
23	33004–00	2	Nut–HWH

Ref. No.	Part No.	Qty.	Description

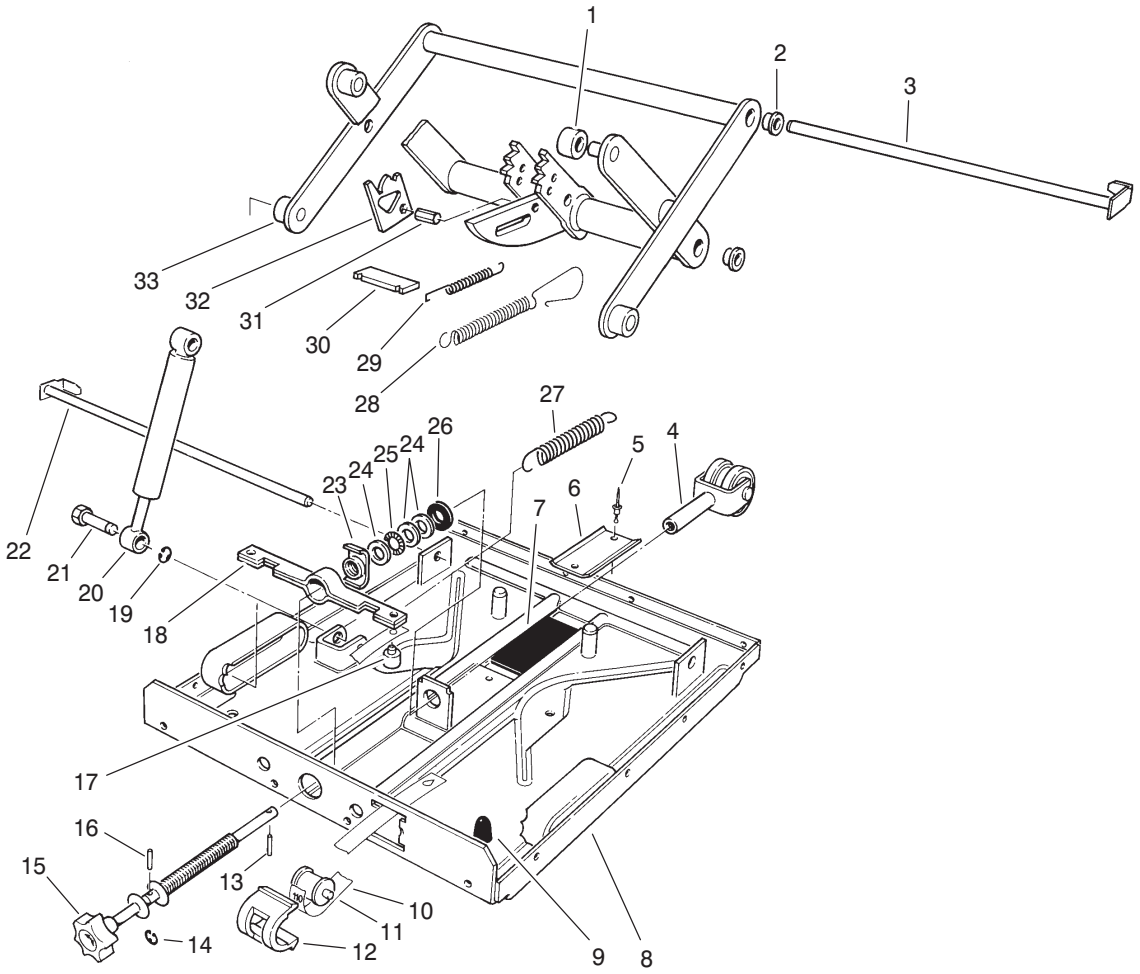

T–0483–1

Seat Suspension Assembly

Ref. No.	Part No.	Qty.	Description
1	40–4010	4	Roller
2	71–2180	4	Bearing
3	71–2190	1	Pin
4	71–2290	1	Bearing–Trible
5	40–4090	2	Rivet–Pop
6	40–4080	1	Track–U
7	40–4120	1	Plate–Rubber
8	71–2310	1	Plate–Suspension, Lower (Incl. Ref. #5–7 & 9)
9	71–2300	2	Bumper
10	71–2280	1	Band–Indicator, Weight
11	40–4150	1	Roller
12	40–4160	1	Guide–Sleeve
13	71–2210	1	Pin
14	71–2230	1	Ring–Snap
15	71–2240	1	Knob ASM (Incl. Ref.#13, 14 & 16)
16	71–2220	1	Pin
17	40–4230	1	Plug
18	71–2250	1	Bracket–Spring
19	71–2330	2	Ring–Snap
20	71–2340	1	Absorber–Shock
21	71–2320	2	Pin
22	71–2170	1	Pin
23	71–2270	1	Nut–Special

Ref. No.	Part No.	Qty.	Description
24	40–4070	3	Washer
25	40–4310	1	Bearing–Needle, Thrust
26	40–4060	1	Washer–Rubber
27	71–2260	2	Spring
28	40–4340	1	Spring–Extension
29	40–4350	2	Spring–Extension
30	40–4360	1	Plate
31	40–4370	1	Bolt
32	40–4380	2	Bracket–Release
33	71–2200	1	Bracket–Arm, Swing (Incl. Ref. #1–3, 22 & 29–32)
*	71–0480	1	Suspension ASM (Incl. Ref. #1–33, & 6–8,12 & 13, from page 2)

* Not Illustrated

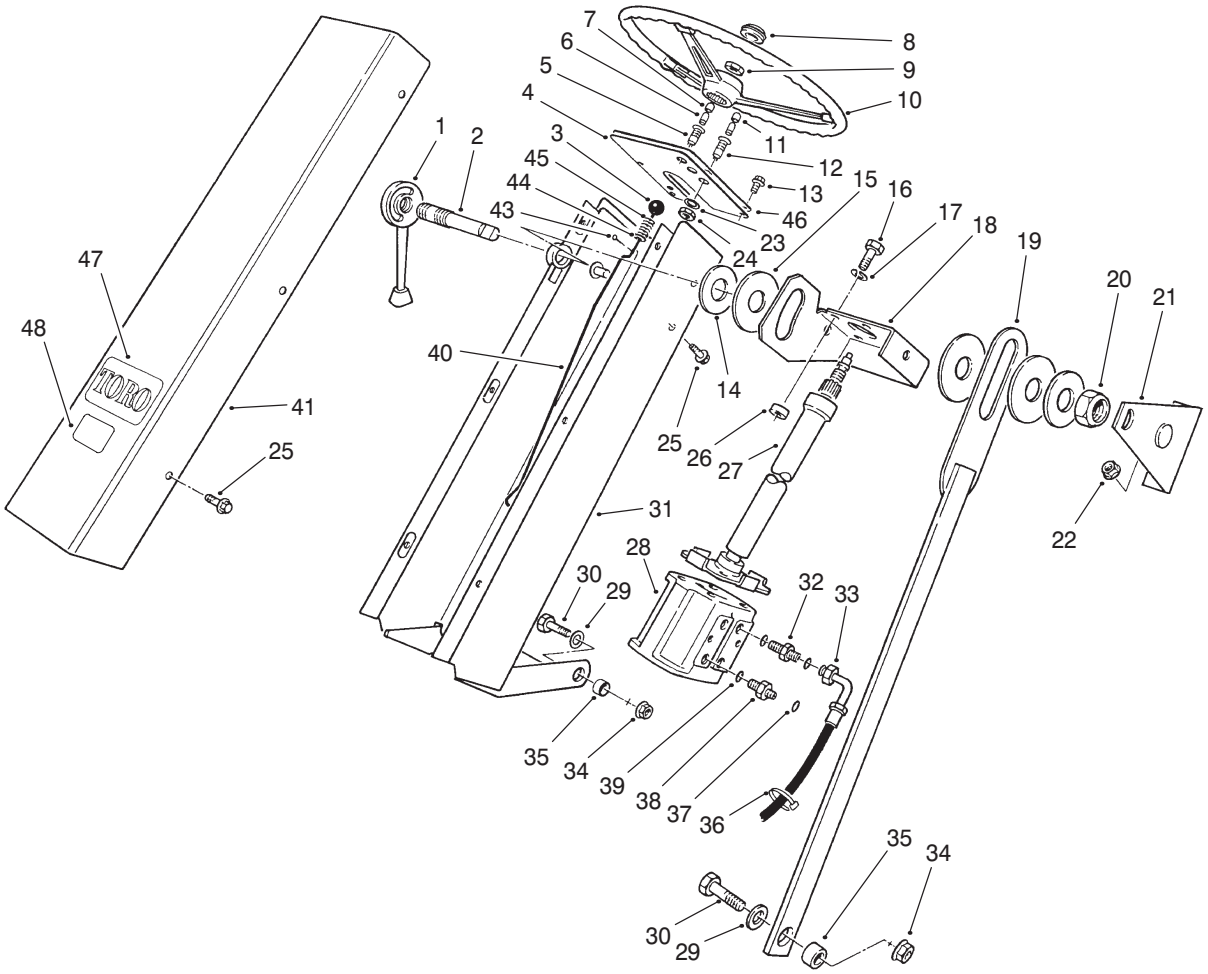

Steering Tower Assembly

Ref. No.	Part No.	Qty.	Description
1	69–1560–03	1	Lever–Lock
2	69–9230	1	Shaft–Povot, Steering
3	233–17	1	Knob
4	69–9440–03	1	Panel–Tower, Steering
5	44–2210	1	Body–Light, Indicator (Incl. Ref. #6–7 & 23–24)
†6		3	Bulb–Light, Indicator (#1891)
7	218–533	1	Lens–Light, Indicator (Red)
8	98–7325	1	Cover–Wheel, Steering
9	47–6990	1	Nut–Hex
10	68–8080	1	Wheel–Steering
11	218–562	2	Lens–Light, Indicator (Amber)
12	44–2212	2	Body–Light, Indicator (Incl. Ref.#6, 11 & 23–24)
13	32144–64	4	Screw–HWH
14	20–9500	2	Spacer
15	31–0390	3	Washer–Friction
16	323–7	4	Screw–HH
17	3253–21	4	Washer–Lock
18	69–9540–03	1	Bracket–Gear, Steering
19	69–7760–03	1	Link–Gear, Steering

Ref. No.	Part No.	Qty.	Description
20	3296–49	1	Nut–Lock
21	69–7740–03	1	Support–Gear, Steering
22	32128–20	2	Nut–HHF
23	218–536	3	Washer–Lock
24	218–535	3	Nut–Hex
25	3234–14	8	Screw–HWH
26	46–1600	4	Spacer
27	71–0540	1	Column–Steering
28	92–9748	1	Valve–Steering, Power
29	3256–26	3	Washer–Flat
30	325–5	3	Screw–HH
31	69–8160–01	1	Tower–Steering
32	340–133	3	Fitting–Straight, Hydraulic (Incl. Ref. #37 & 39)
33	69–5500	4	Hose–Hydraulic
34	32128–23	3	Nut–HHF
35	28–0380	3	Spacer
36	3290–378	5	Tie–Cable
37	237–22	4	O–Ring
38	69–6980	1	Valve–Check (Incl. Ref. # 37 & 39)
39	237–79	4	O–Ring
40	71–4060–03	1	Rod–Latch, Brake
41	69–8510–01	1	Cover–Tower, Steering

† Obtain Locally

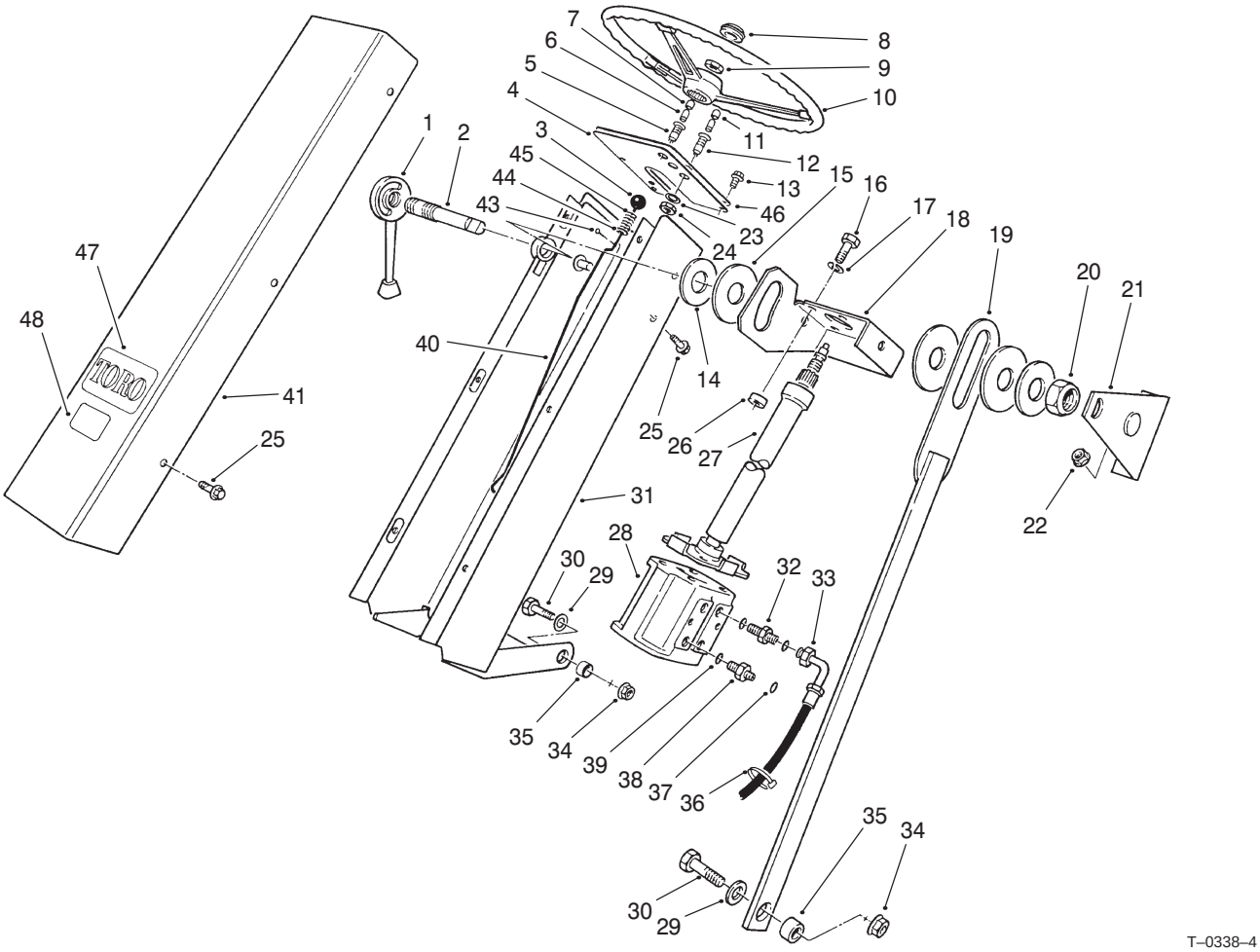

Steering Tower Assembly (Continued)

Ref. No.	Part No.	Qty.	Description
43	3272–5	1	Pin–Cotter
44	3256–22	1	Washer–Flat
45	95–1821–03	1	Spring–Compression
46	95–0825	1	Panel–Control
47	62–5550	1	Decal
48	93–7252	1	Decal–CE
*	72–0130	1	Kit–Horn

Ref. No.	Part No.	Qty.	Description

* Not Illustrated

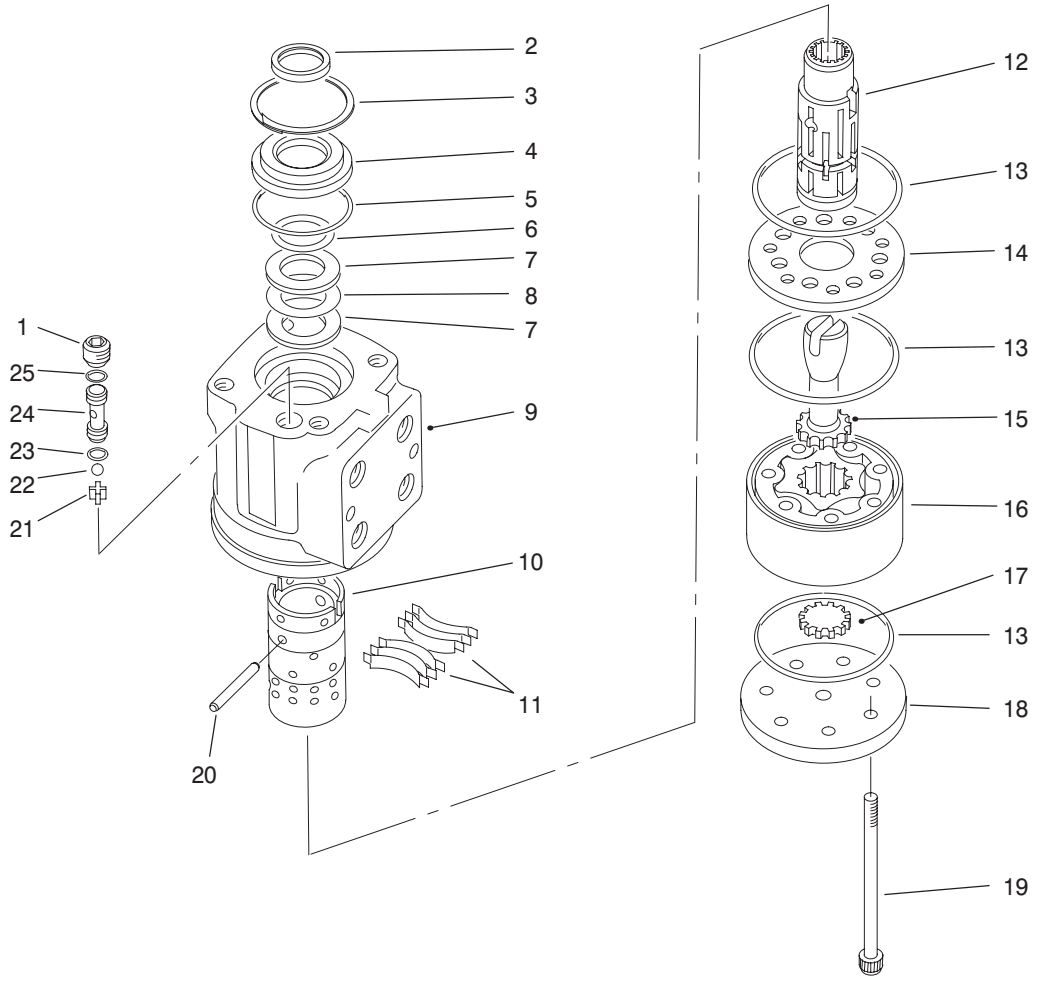

T–1007–2

Power Steering Valve Assembly No. 92–9748

Ref. No.	Part No.	Qty.	Description
1	52–9260	1	Screw–Set
†2		1	Seal–1” ID
3	52–9230	1	Ring–Retaining
4	52–9240	1	Bushing–Seal, Gland
†5		1	Seal–1.875” ID
†6		1	Seal–Ring, Quad
7	59–6730	2	Race–Bearing
8	59–6740	1	Bearing–Thrust, Needle
†9		1	Housing
†10		1	Sleeve–Control
11	59–6820	1	Kit–Spring, Centering
†12		1	Spool–Control
†13		3	Seal
14	92–9732	1	Plate–Wear
15	52–9320	1	Drive
16	69–1860	1	Gerotor
17	69–1880	1	Spacer
18	92–9730	1	Cap–End
19	92–9735	7	Screw–Cap
20	59–6830	1	Kit–Pin, Centering
21	52–9290	1	Retainer–Ball, Check
22	52–9280	1	Ball–Check
†23		1	Seal
24	52–9270	1	Seat–Ball, Check
†25		1	Seal

Ref. No.	Part No.	Qty.	Description
*	52–9250	1	Kit–Bearing, Needle (Incl. Ref. #7–8)
*	92–9749	1	Kit–Seal (Incl. Ref. #2, 5–6,13, 23 & 25)

* Not Illustrated
† Not Serviceable Separately

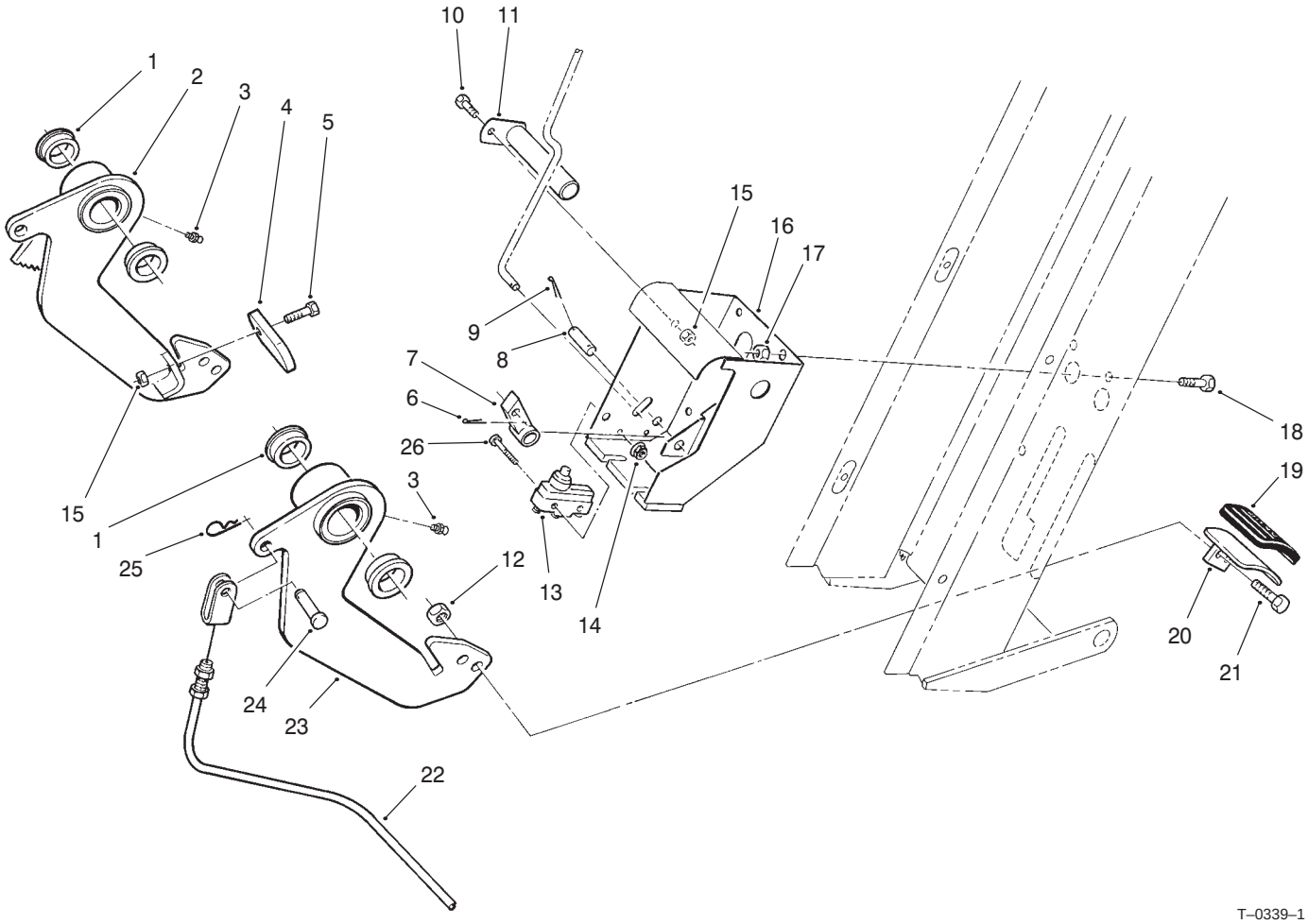

T–0339–1

Steering Brake Assembly

Ref. No.	Part No.	Qty.	Description
1	256–247	4	Bushing–Flange
2	69–7890–03	1	Arm–Brake, RH (Incl. Ref. #1 & 3)
3	302–5	2	Fitting–Grease
4	69–9210–03	1	Lever–Latch, Brake
5	321–4	1	Screw–HH
6	3272–5	1	Pin–Cotter
7	69–7720–03	1	Pawl–Brake
8	69–9200	1	Pin–Pawl, Brake
9	3272–6	2	Pin–Cotter
10	321–2	1	Screw–HH
11	69–7790–03	1	Pin–Arm, Brake
12	32152–1	4	Nut–Lock
13	29–6163	1	Switch–Micro
14	3296–9	2	Nut–Lock
15	32152–4	2	Nut–Lock
16	69–7840–03	1	Mount–Arm, Brake
17	32128–20	3	Nut–HHF
18	3234–14	3	Screw–HH
19	49–6171	1	Pad–Brake Pedal, LH
*	49–6172	1	Pad–Brake Pedal, RH
20	69–7700–03	2	Pedal–Brake
21	323–4	4	Screw–HH
22	69–5670	2	Cable–Brake
23	69–7880–03	1	Arm–Brake, LH (Incl. Ref. #1 & 3)
24	283–1	2	Pin–Clevis
25	3290–307	2	Pin–Cotter, Hair
26	3249–11	2	Screw–Machine
*	3290–378	3	Tie–Cable

* Not Illustrated

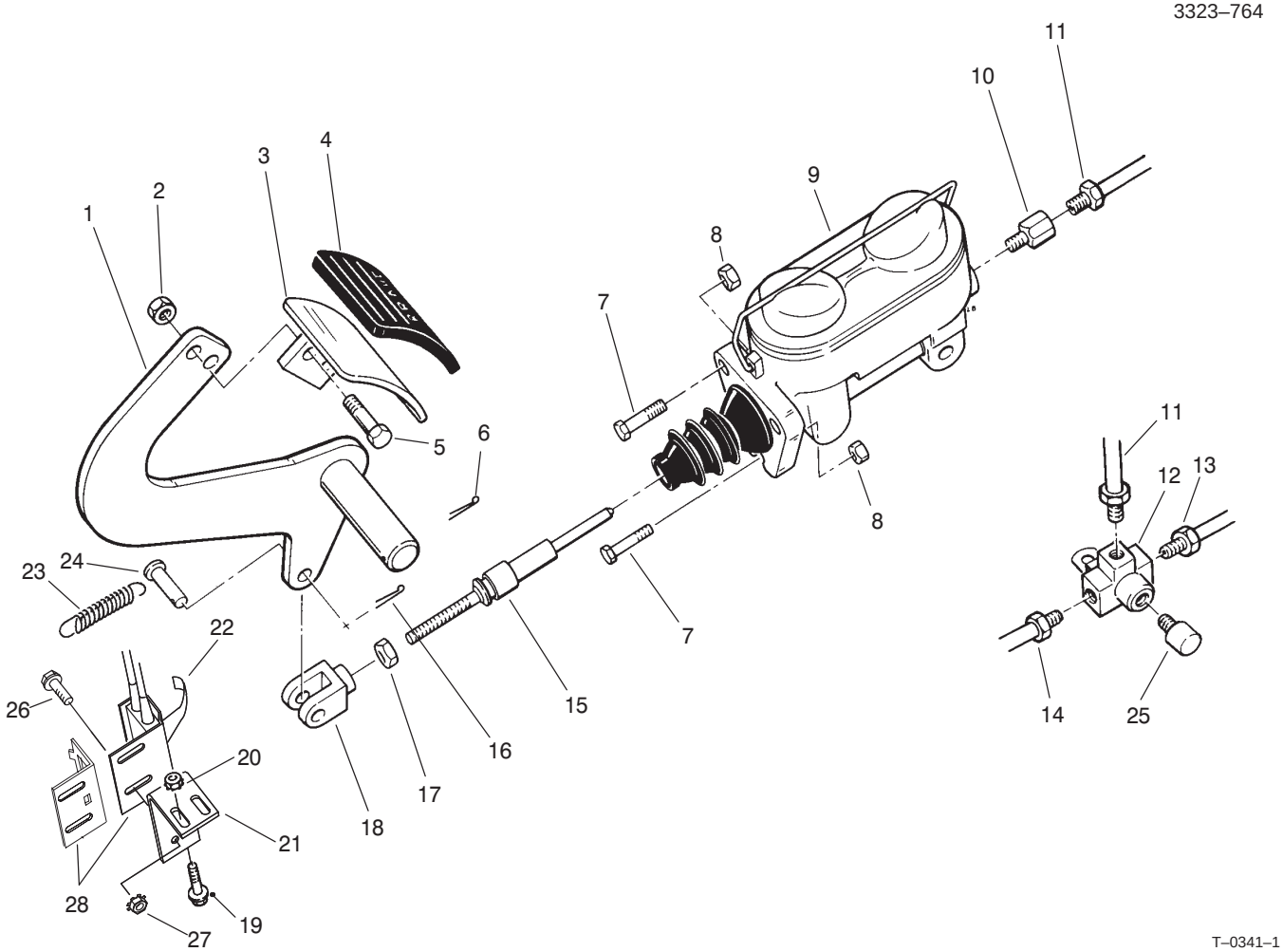

T–0341–1

Service Brake Assembly

Ref. No.	Part No.	Qty.	Description
1	69–8750–03	1	Arm–Brake
2	32152–1	2	Nut–Lock
3	69–7700–03	1	Pedal–Brake
4	49–6170	1	Pad–Brake
5	322–3	2	Screw–HH
6	3272–12	1	Pin–Cotter
7	323–7	3	Screw–HH
8	32128–21	3	Nut–HHF
9	69–2640	1	Master Cylinder ASM
10	353–994	1	Adapter
11	74–2530	1	Tube–Hydraulic
12	218–243	1	Fitting–Tee
13	74–2510	1	Tube–Hydraulic, LH
14	74–2520	1	Tube–Hydraulic, RH
15	69–9340	1	Rod–Brake
16	3272–10	1	Pin–Cotter
17	3220–2	1	Nut–Jam
18	282–2	1	Clevis–Rod, Brake
19	3234–13	2	Screw–HWH
20	32149–2	2	Nut–Keps
21	93–7039–01	1	Bracket–Brake, Service
22	93–7037	1	Switch
23	21–1830	1	Spring–Extension
24	283–1	1	Pin–Clevis
25	218–242	1	Switch–Brake
26	32144–1	2	Screw–HH

Ref. No.	Part No.	Qty.	Description
27	32127–11	2	Nut–Flexlok
28	93–9337	1	Bracket–Switch

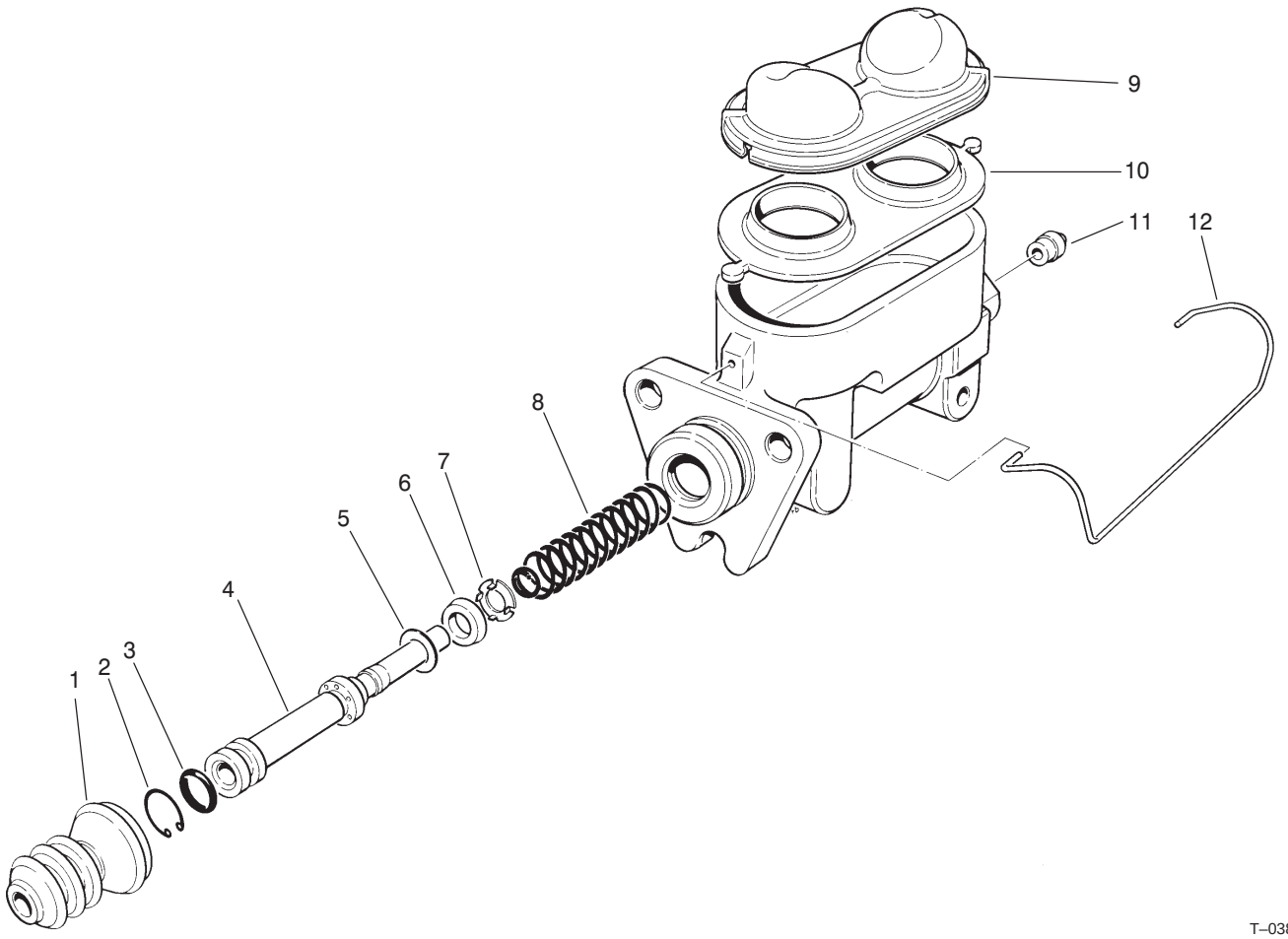

T–0384–1

Brake System Master Cylinder No. 69–2640

Ref. No.	Part No.	Qty.	Description
1	69–2650	1	Boot–Rod
2	69–2660	1	Ring–Retaining
†3		1	Seal–Lip
†4		1	Piston
†5		1	Protector–Cup
†6		1	Cup–Pumping
†7		1	Retainer–Cup
†8		1	Spring–Return, Piston
9	69–2750	1	Cover–Reservoir
10	69–2760	1	Gasket–Diaphragm
11	69–2770	1	Seat–Tube
12	69–2740	1	Bail–Cover
*	69–2730	1	Piston ASM (Incl. Ref. #3–8)

Ref. No.	Part No.	Qty.	Description

* Not Illustrated
† Not Serviceable Separately

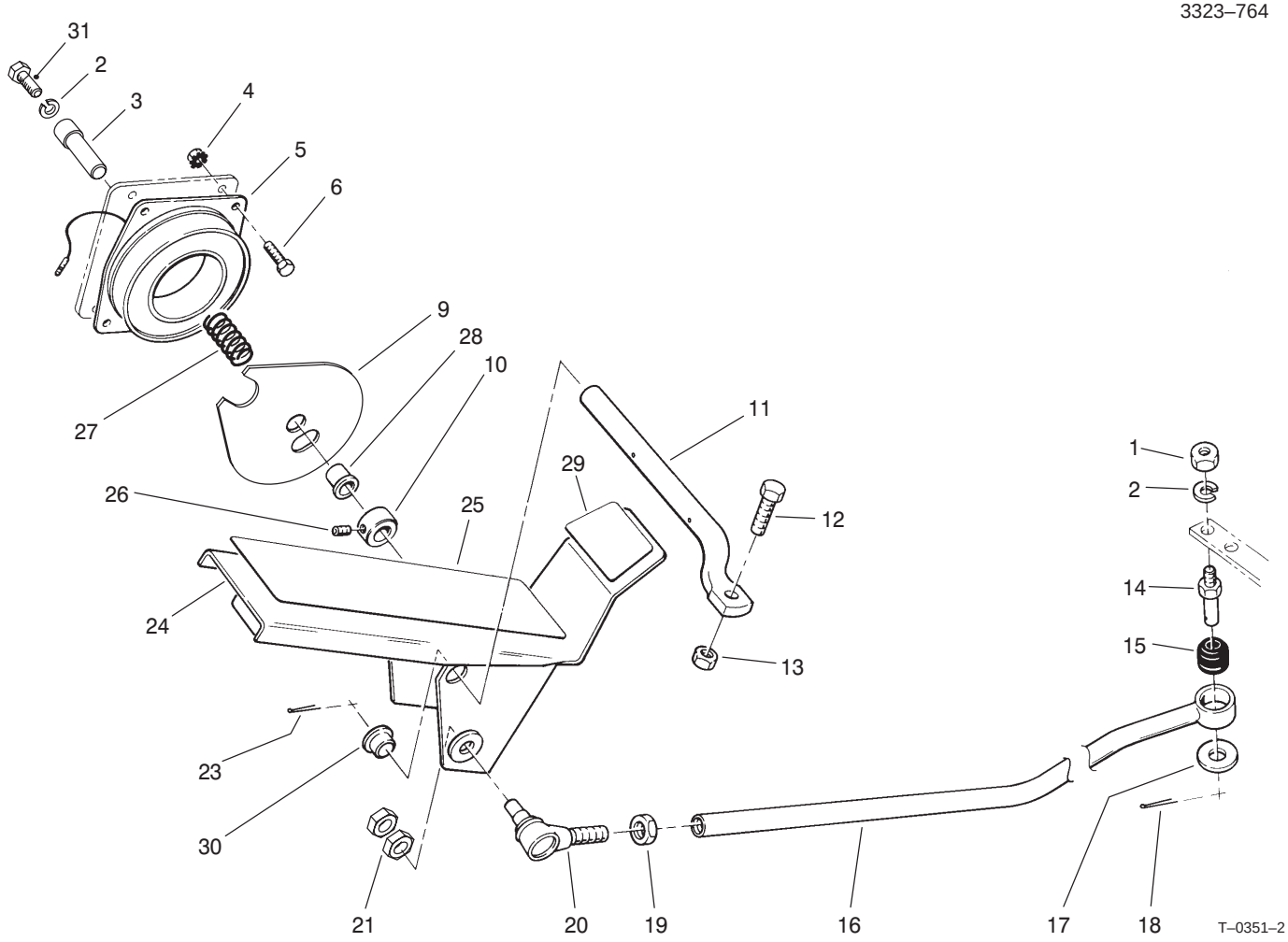

Traction Pedal and Cruise Control Assembly

Ref. No.	Part No.	Qty.	Description
1	3217–7	1	Nut–Lock
2	3253–21	2	Washer–Lock
3	92–9701	1	Shaft–Control, Cruise
4	32149–2	4	Nut–Keps
5	100–8016	1	Field Core Coil ASM
6	321–3	4	Screw–HH
9	99–5348	1	Plate–Clutch
10	43–6320	1	Collar–Locking
11	69–9390	1	Shaft–Pedal
12	3234–14	1	Screw–HH
13	32128–20	1	Nut–HHF
14	69–9030	1	Post–Device, Neutral
15	23–2270	1	Bushing–Rubber
16	74–2700–03	1	Rod–Control
17	3256–6	1	Washer–Flat
18	3272–10	1	Pin–Cotter
19	3220–5–01	1	Nut–Jam
20	21–0141–03	1	Joint–Ball
21	3220–3	2	Nut–Jam
23	3272–7	2	Pin–Cotter
24	99–5347–01	1	Pedal–Traction
25	71–0440	1	Abrasive–Pedal, Front
26	3245–32	1	Screw–Set
27	43–6200	1	Spring–Compression
28	256–273	1	Bushing–Flange
29	71–0450	1	Abrasive–Pedal, Rear

Ref. No.	Part No.	Qty.	Description
30	256–156	2	Bushing–Flange
31	323–6	1	Screw–HH

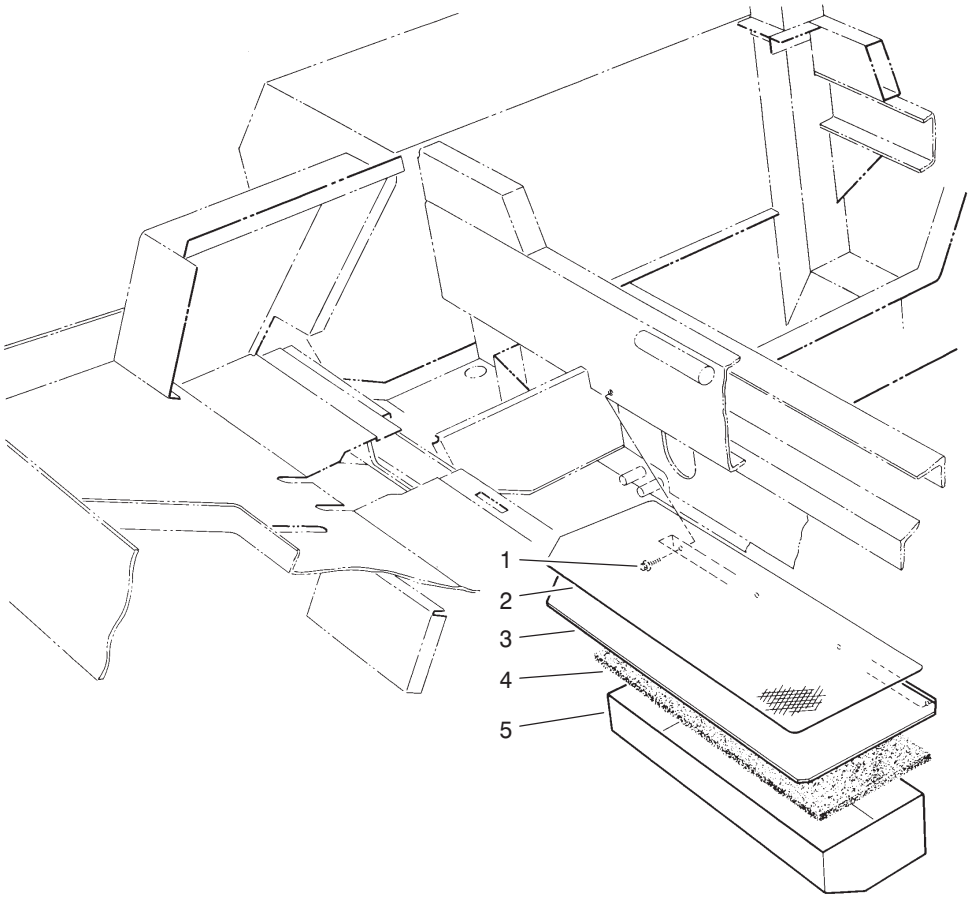

T–0876–1

Tool Box Assembly

Ref. No.	Part No.	Qty.	Description
1	3234–14	4	Screw–HFH
2	71–0410	1	Cover–Abrasive
3	69–8080–01	1	Cover–Box, Tool
4	69–9430	1	Foam–Box, Tool
5	69–8110–03	1	Box–Tool

Ref. No.	Part No.	Qty.	Description

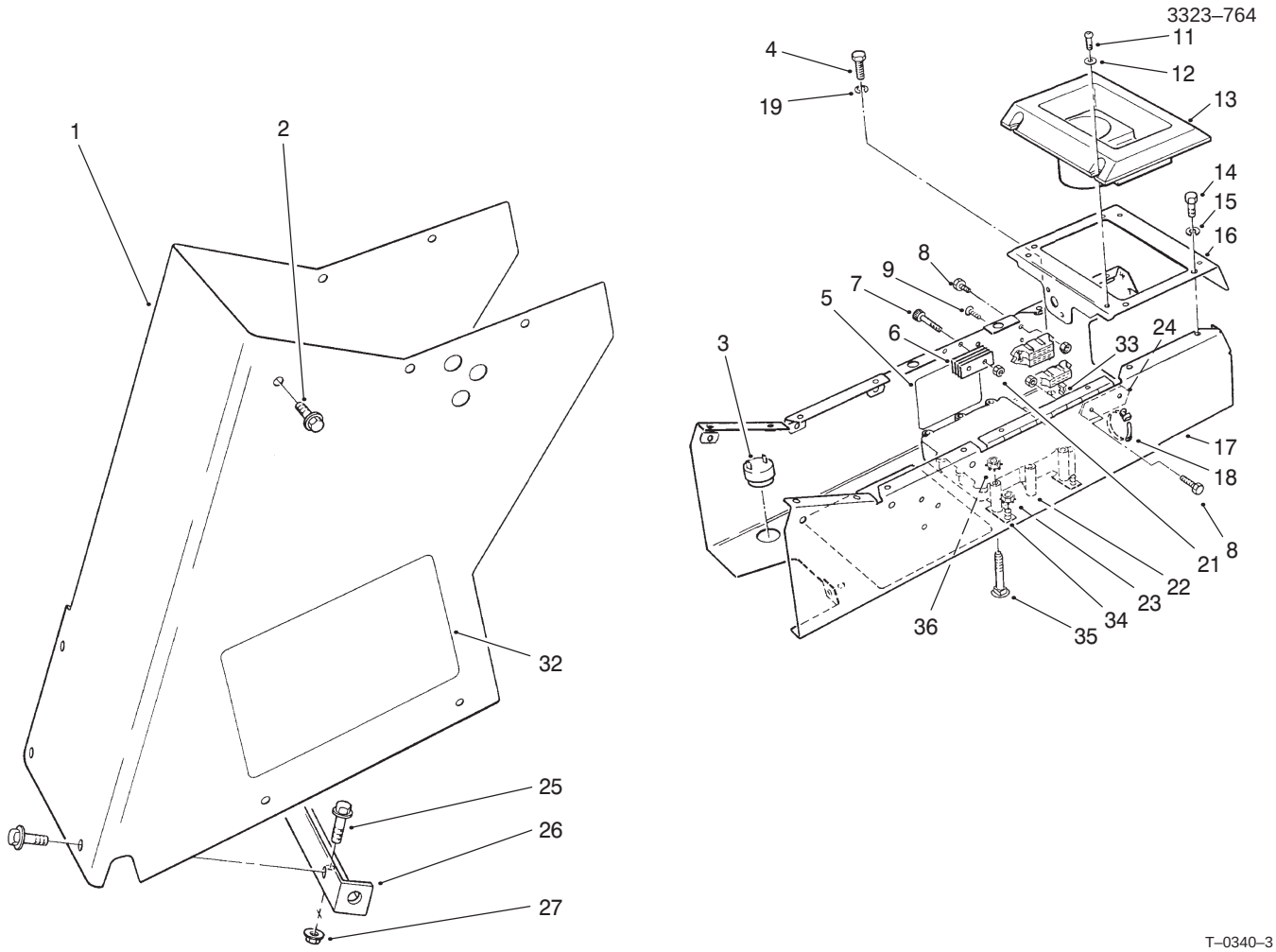

Control Box Assembly

Ref. No.	Part No.	Qty.	Description
1	69–9560–01	1	Housing–Control
2	3234–7	11	Screw–HWH
3	80–9330	1	Alarm–Audio
4	323–4	4	Screw–HH
5	98–1487	1	Decal–Fuse
6	69–6260	1	Magnet
7	32105–12	2	Screw–HSH
8	32105–13	4	Screw–HH
11	3290–133	4	Screw–Head, Round
12	3256–22	4	Washer–Flat
13	69–7040	1	Holder–Cup
14	321–3	4	Screw–HH
15	3253–3	4	Washer–Lock
16	71–2430–03	1	Plate–Rear
17	71–4130	1	Support–Control
18	3290–378	2	Tie–Cable
19	3253–21	4	Washer–Lock
21	3296–2	6	Nut–Lock
22	92–5720	1	Controller
23	32149–7	3	Nut–Keps
24	67–7160	4	Block–Fuse
25	3234–14	2	Screw–HH
26	69–8210–03	1	Support–Cover
27	32128–20	2	Nut–HHF
32	99–4416	1	Decal–Service

Ref. No.	Part No.	Qty.	Description
32	95–0832	1	Decal–Service (Europe)
33	218–581	6	Fuse–15A
34	92–8661	3	Tab
35	3229–8	3	Bolt–CARR
36	32149–2	3	Nut–Keps
37	85–4491	1	Holder–Indicator, Light (Incl. Ref. #38–40)
38	219–19	1	Bulb
39	3220–24	1	Nut–Hex
40	3254–6	1	Washer–Lock, Int. Tooth
*		1	Wire Harness ASM (Incl. Ref. #24)
*	218–573	1	Fuse–5A
*	3290–378	25	Tie–Cable

* Not Illustrated

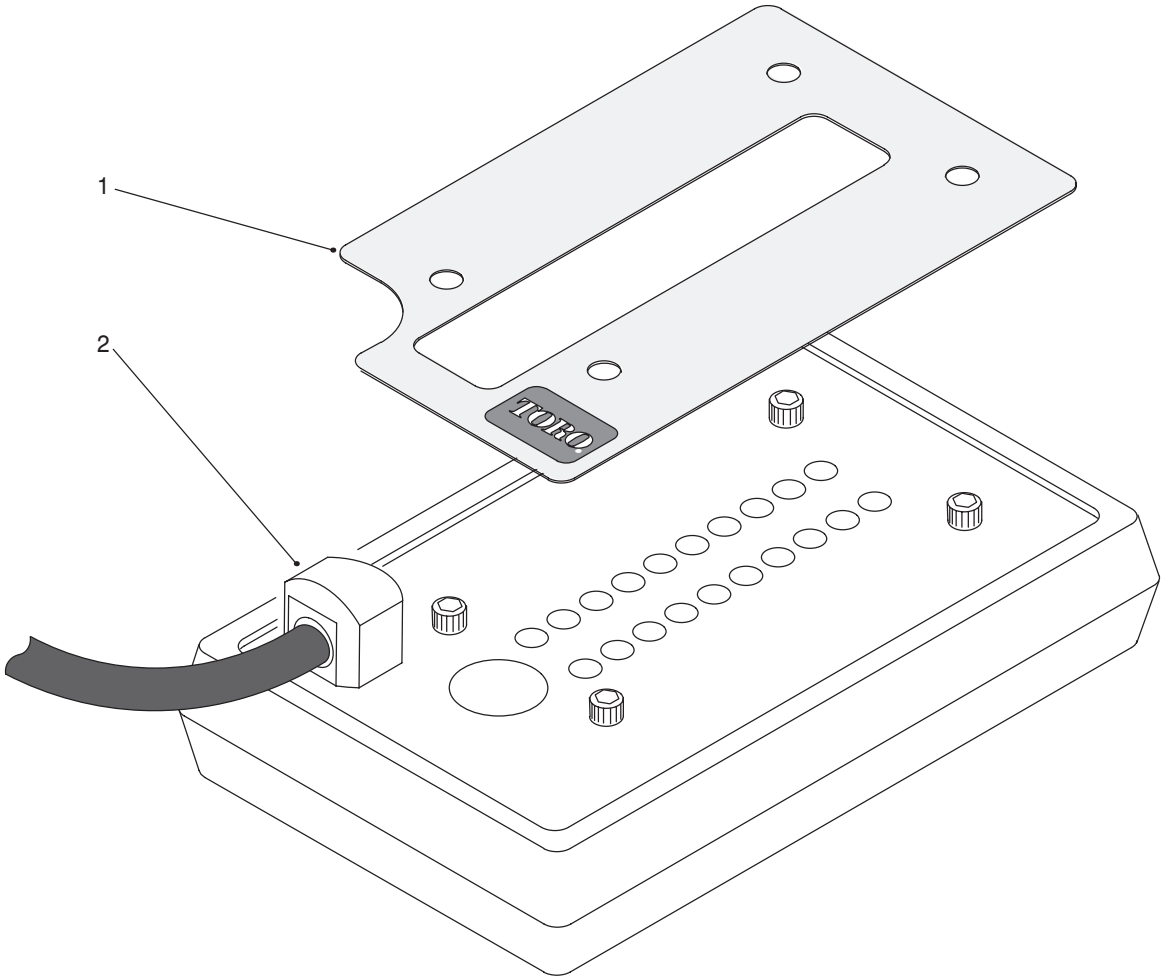

T–1548–1

Diagnostic Display Assembly

Ref. No.	Part No.	Qty.	Description
1	95–0834	1	Decal–Diagnostic V2.0 GM 580D
2	85–4750	1	Display–Diagnostic

Ref. No.	Part No.	Qty.	Description

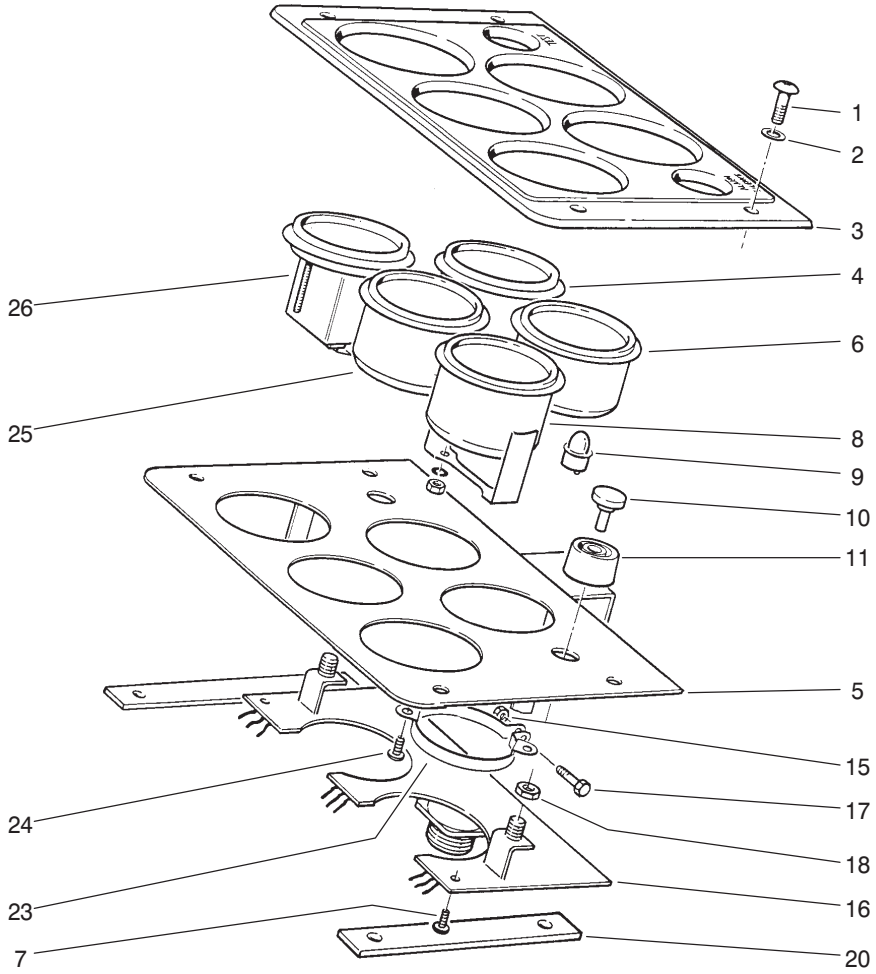

T–1448–1

Upper Control Panel Assembly

Ref. No.	Part No.	Qty.	Description
1	3290–133	4	Screw–Head, Round
2	3256–23	4	Washer
3	95–0827	1	Panel
4	71–4210	1	Cluster–Light, Warning
5	86–7410–03	1	Plate–Gage
6	71–4200	1	Cluster–Light, Warning
7	32104–16	4	Screw–Tapping
8	63–7430	1	Gauge–Temperature
9	219–17	8	Bulb–Light
10	43–6280	2	Button
11	43–6420	2	Bezel
15	3296–2	2	Nut–Lock
16	92–1771	1	Board–Instrument
17	32105–1	2	Screw–HH
18	218–498	2	Nut
20	71–4250–03	2	Spacer
23	69–4780	2	Clamp–Gauge
24	32144–19	4	Screw–Head, Round
25	66–2940	1	Gauge–Fuel
26	66–2950	1	Hourmeter

Ref. No.	Part No.	Qty.	Description

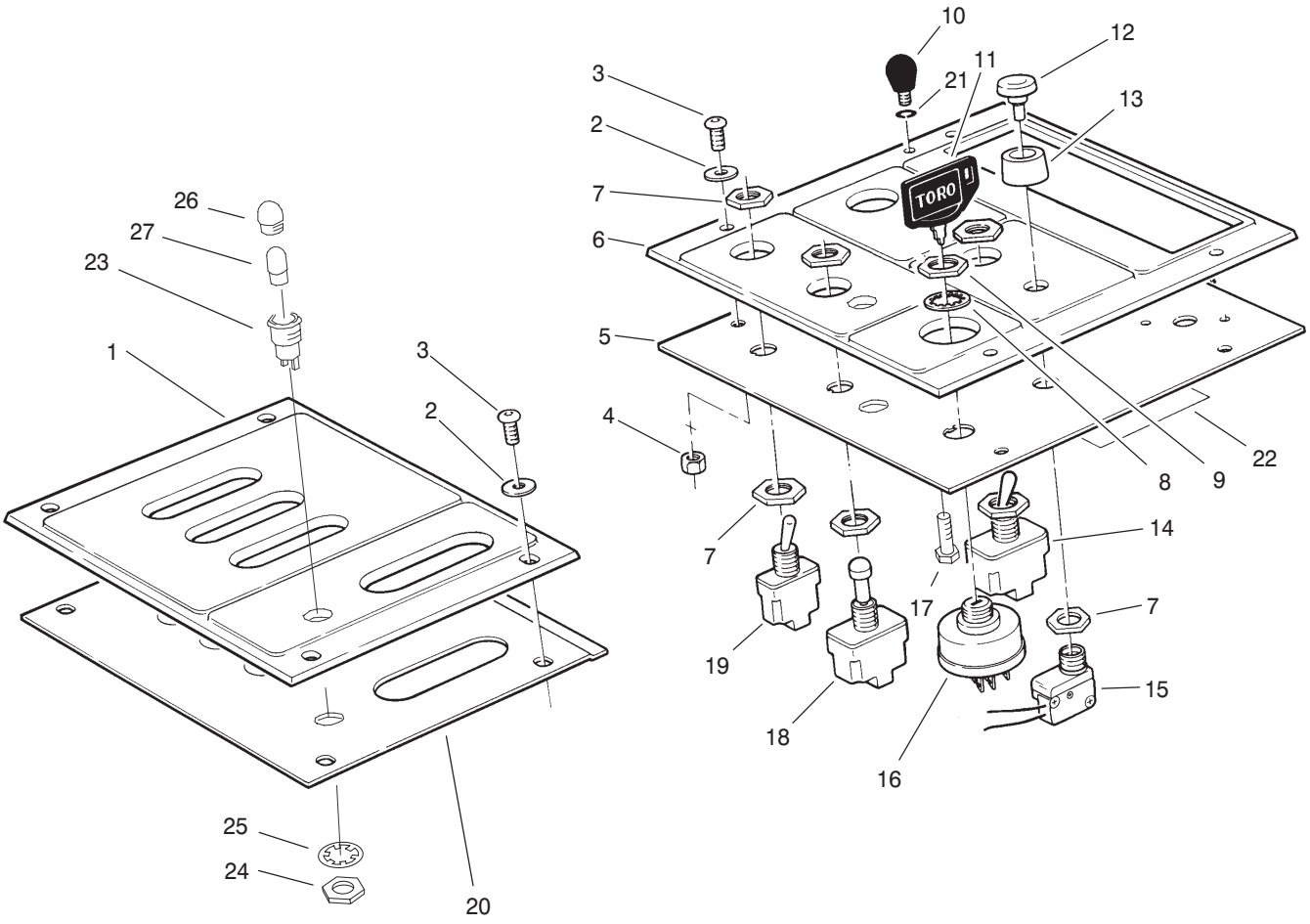

Lower Control Panel Assembly

Ref. No.	Part No.	Qty.	Description
1	100–3394	1	Panel–Lever
2	3256–22	8	Washer–Flat
3	3290–133	8	Screw–Head, Round
4	3296–42	4	Nut–Lock
5	100–3392–03	1	Plate–Control
6	100–3395	1	Panel–Control
7	218–498	10	Nut–Hex
8	218–447	1	Washer–Lock
9	218–446	1	Nut–Hex
10	233–66	1	Knob
11	63–8360	1	Key–Ignition
12	43–6280	2	Button
13	43–6420	2	Bezel
14	69–9740	1	Switch–Toggle (Incl. Ref. #7)
15	72–9760	2	Switch (Incl. Ref. #7, 12 & 13)
16	99–2319	1	Switch–Ignition (Incl. Ref. #8 & 9)
17	3290–392	1	Screw–HH
18	69–9730	1	Switch–Toggle (Incl. Ref. #7)
19	71–4170	1	Switch–Toggle (Incl. Ref. #7)
20	100–3393–03	1	Plate–Lever
21	3253–15	A/R	Washer–Lock

Ref. No.	Part No.	Qty.	Description
22	95–0831	1	Decal–Fuse
23	44–2210	1	Kit–Light (Incl. Ref. #24–27)
24	218–535	1	Nut–Hex
25	218–536	1	Washer–Lock
26	218–533	1	Lens–Red
27	93–7480	1	Bulb–LED

Electrical Schematic

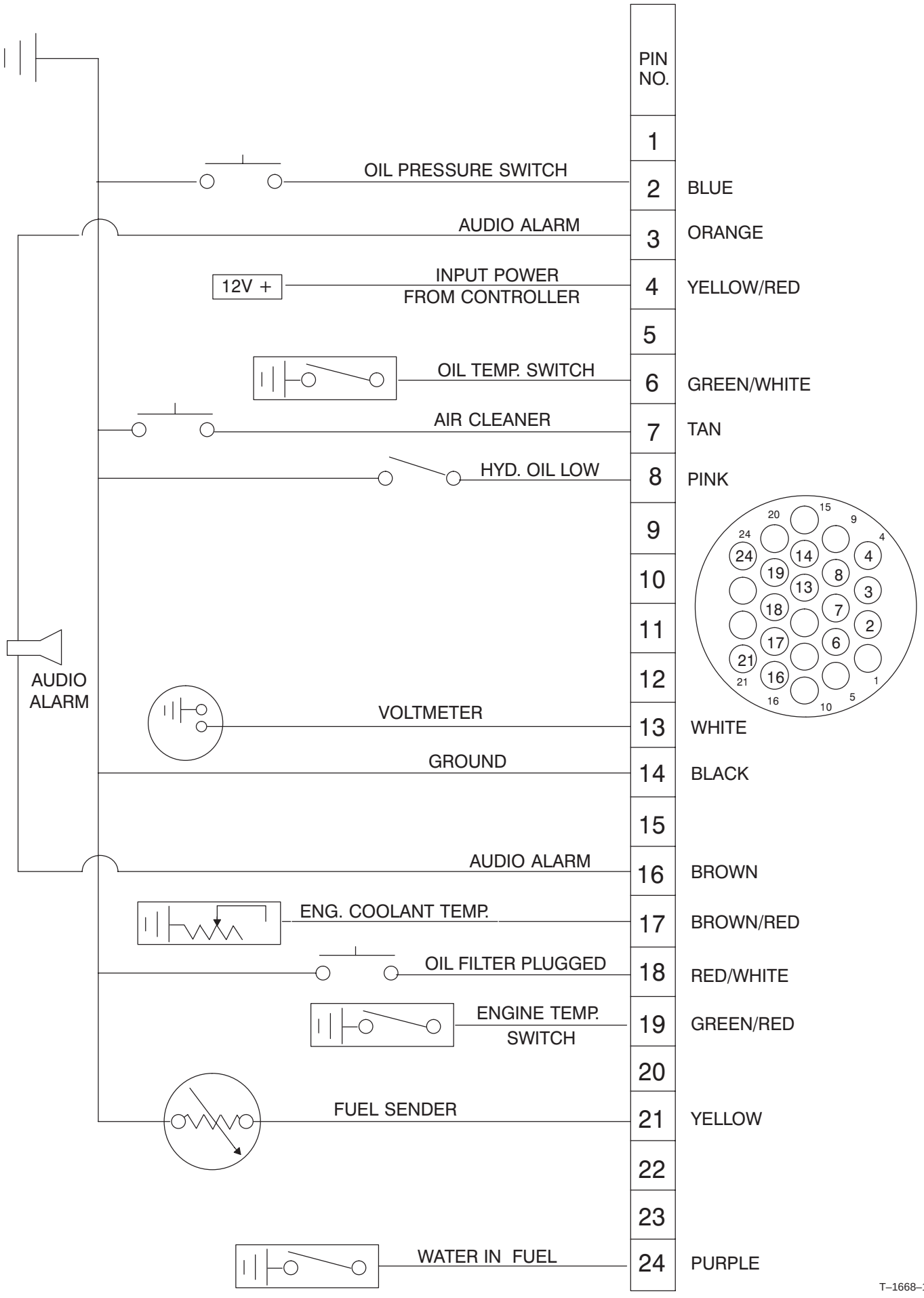

T–1668–1

Controller Electrical Schematic

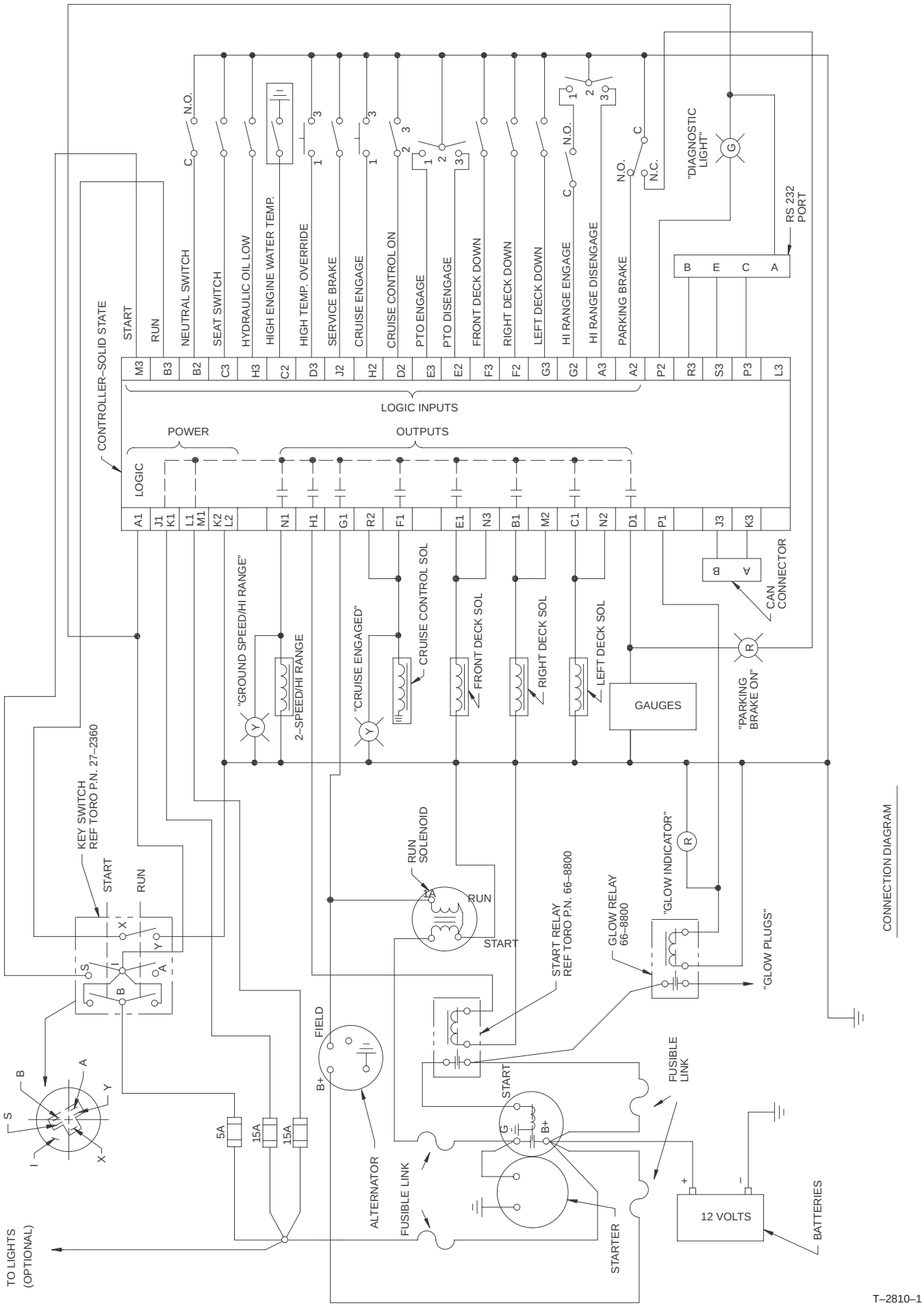

T–2810–1

Operators Control Panel Electrical Schematic

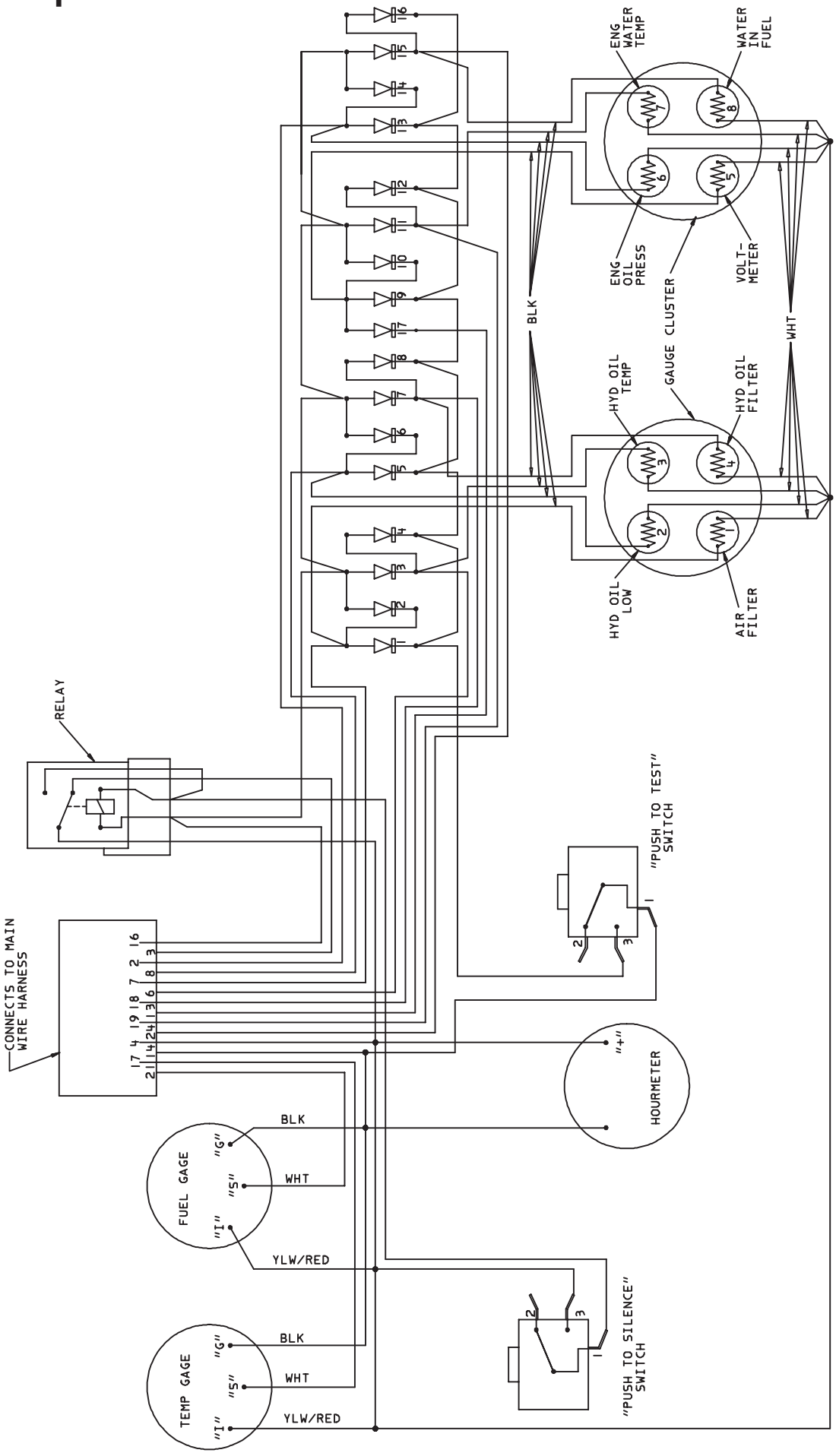

T–1655–1

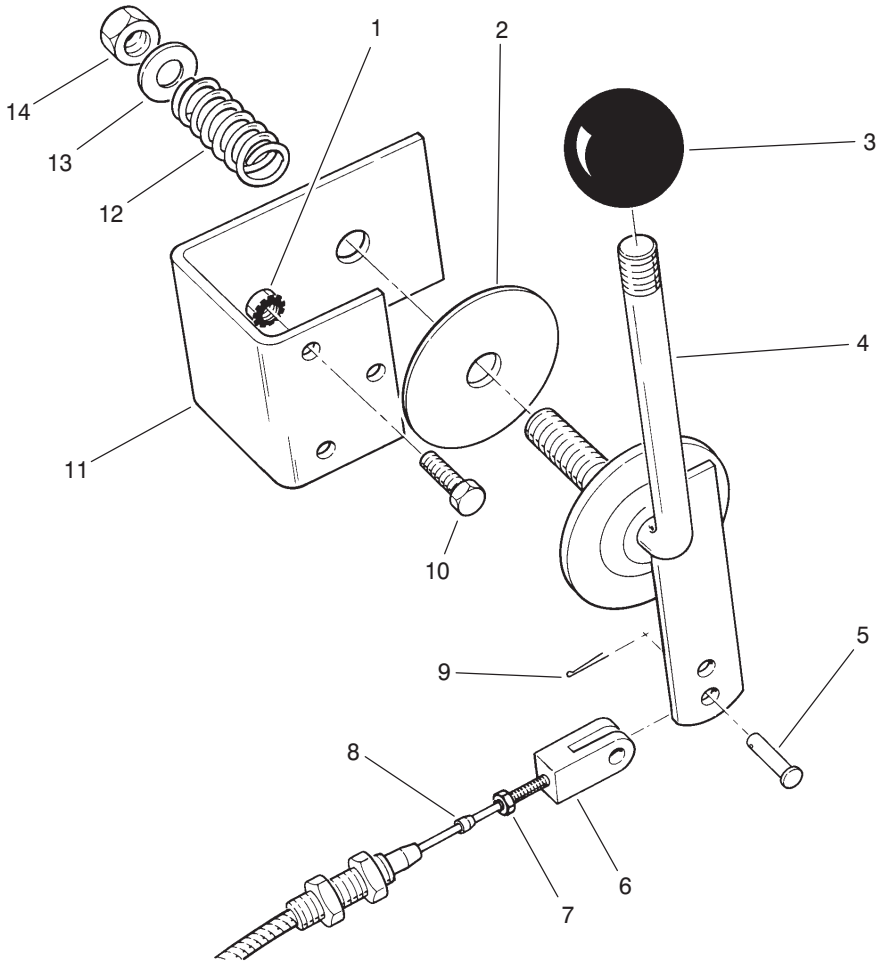

T–0352–1

Throttle Assembly

Ref. No.	Part No.	Qty.	Description
1	3296–42	3	Nut–Lock
2	3–2858	1	Disc–Friction
3	233–48	1	Knob
4	69–8040	1	Arm–Throttle
5	283–67	1	Pin–Clevis, Arm End
*	69–0090	1	Pin–Clevis, Engine End
6	282–28	2	Clevis–Adjustable
7	3219–14	2	Nut–Hex
8	77–2990	1	Cable–Throttle
9	3272–1	3	Pin–Cotter
10	321–3	3	Screw–HH
11	69–9130–01	1	Bracket–Throttle
12	3–8596	1	Spring–Compression
13	3256–26	1	Washer–Flat
14	3296–23	1	Nut–Lock

Ref. No.	Part No.	Qty.	Description

* Not Illustrated

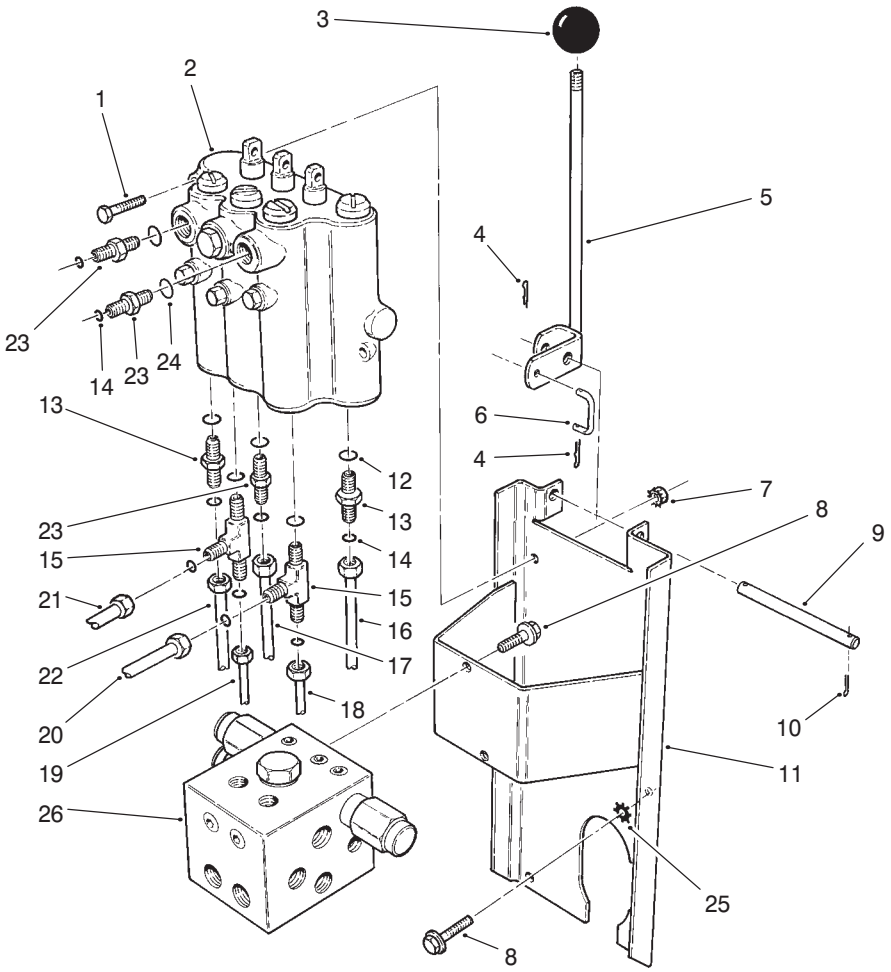

T–0355–1

Lift Valve Installation Assembly

Ref. No.	Part No.	Qty.	Description
1	321–10	2	Screw–HH
2	69–1780	1	Lift Valve ASM
3	233–42	3	Knob
4	3272–1	6	Pin–Cotter
5	69–7010	1	Lever–Valve, LH
*	69–6990	1	Lever–Valve, Midddle
*	69–7000	1	Lever–Valve, RH
6	69–9140	3	Link–Lever, Valve
7	32149–2	2	Nut–Keps
8	3234–14	6	Screw–HFH
9	69–9150	1	Shaft–Lever, Valve
10	3272–6	2	Pin–Cotter
11	69–7810–03	1	Bracket–Valve
12	237–79	2	O–Ring
13	340–3	2	Fitting–Straight, Hydraulic (Incl. Ref. #12 & 14)
14	237–22	9	O–Ring
15	340–86	2	Fitting–Tee, Hydraulic (Incl. Ref. #14 & 24)
16	69–5860	1	Tube–Hydraulic
17	69–5720	1	Tube–Hydraulic
18	69–5700	1	Tube–Hydraulic
19	69–5740	1	Tube–Hydraulic
20	69–5680	1	Tube–Hydraulic
21	69–5890	1	Tube–Hydraulic

Ref. No.	Part No.	Qty.	Description
22	69–5870	1	Tube–Hydraulic
23	340–2	3	Fitting–Straight, Hydraulic (Incl. Ref. #14 & 24)
24	237–42	5	O–Ring
25	3254–6	1	Washer–Lock
26	95–5907	1	Counterbalance Manifold ASM

* Not Illustrated

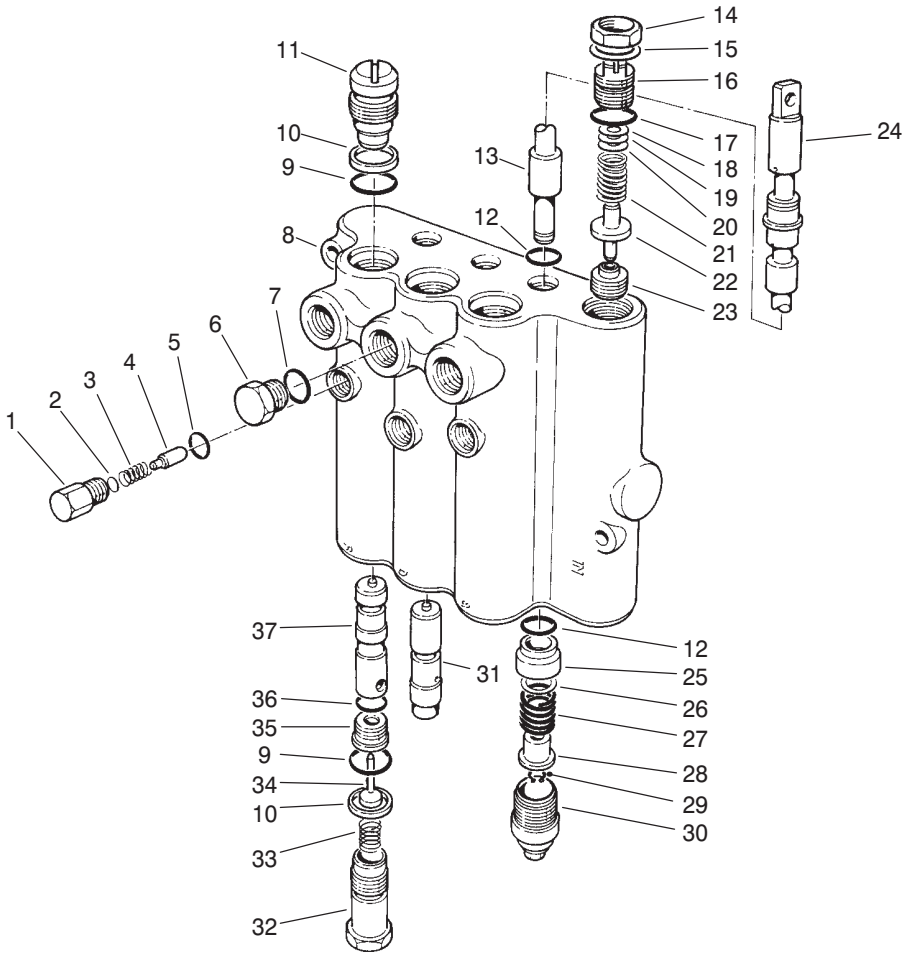

T–0379–1

Lift Valve Assembly No. 69–1780

Ref. No.	Part No.	Qty.	Description
1	58–6780	3	Plug ASM (Incl. Ref. #5)
2	60–6450	A/R	Disc
3	58–6760	3	Spring
4	58–6770	3	Plunger–Detent
5	58–6790	3	O–Ring
6	58–6710	1	Plug ASM (Incl. Ref. #7)
7	58–6720	1	O–Ring
†8		1	Body
9	60–5720	6	O–Ring
10	58–6370	6	Washer–Back–Up
11	58–6350	3	Plug ASM (Incl. Ref. #9–10)
12	58–6450	6	O–Ring
†13		3	Spool
14		1	Nut–Lock
15		1	Washer
16	69–1830	1	Plug ASM (Incl. Ref.#14, 15 & 17)
17	58–6750	1	O–Ring
18	58–6470	A/R	Washer
19	58–6480	A/R	Washer
20	58–6490	A/R	Washer
21	69–1820	1	Spring–Black
22	58–6440	1	Poppet

Ref. No.	Part No.	Qty.	Description
†23		1	Seat
24	58–6320	3	Wiper–Seal
25	58–6400	3	Bushing
26	58–6700	3	Washer
27	58–6730	3	Spring
28	58–6310	3	Spacer
29	58–6460	3	Ring–Retaining
30	58–6420	3	Cap ASM
31	69–1840	1	Plunger
32	69–1800	3	Plug ASM (Incl. Ref. #9–10)
33	69–1810	3	Spring
34	58–6290	3	Poppet ASM
35	58–6330	3	Seat ASM (Incl. Ref. #36)
36	58–6340	3	O–Ring
37	69–1790	2	Plunger
*	60–3780	1	Kit–Seal (Incl. Ref. #5, 7, 9, 10,12,17, 24, 29, 34, & 36)

* Not Illustrated
† Not Serviceable Seperately

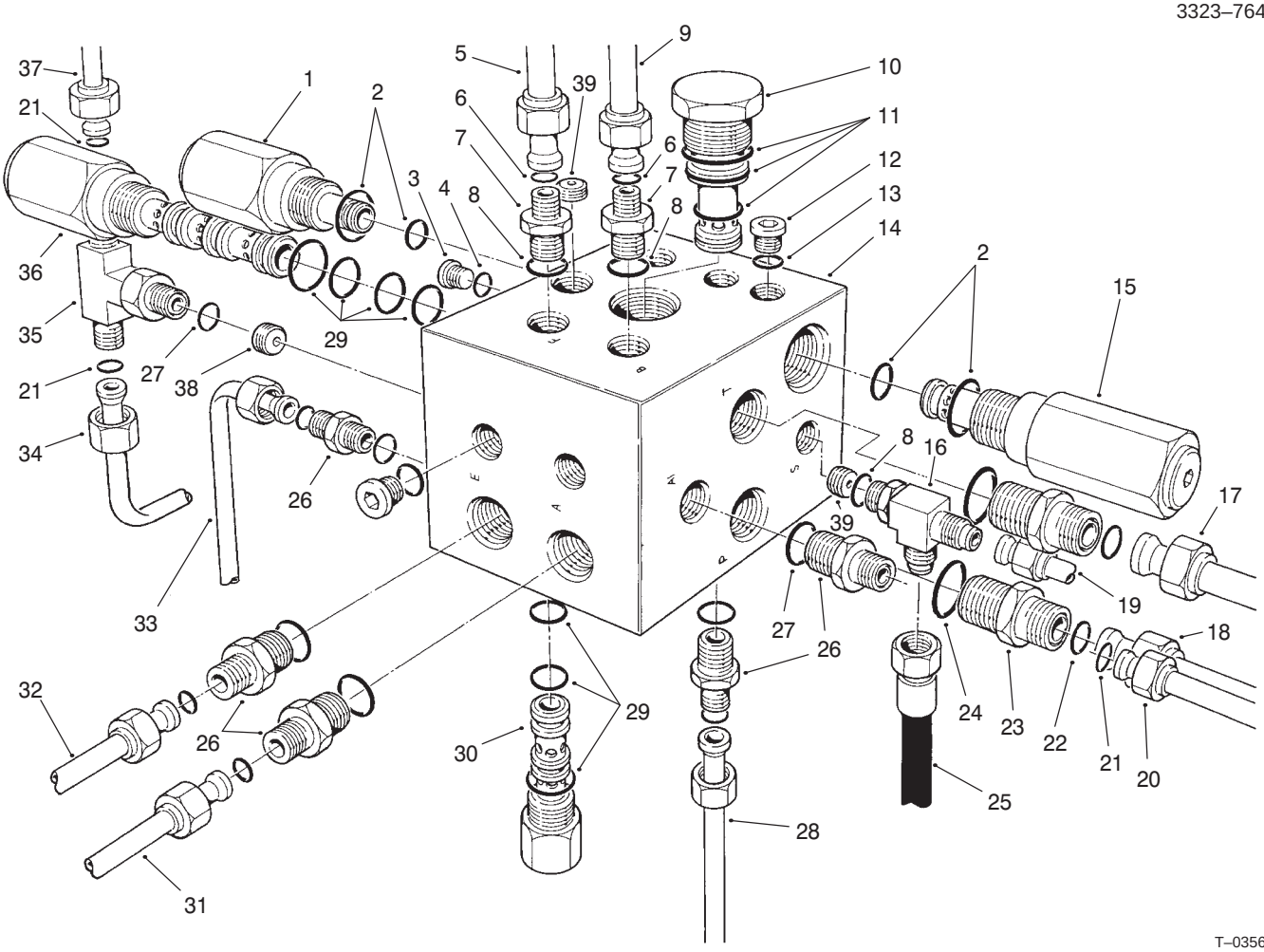

T–0356–2

Counterbalance Manifold Assembly

Ref. No.	Part No.	Qty.	Description
1	95–5630	1	Valve–Cartridge, Hydraulic (Incl. Ref. # 2)
2	95–5645	2	Kit–Seal
3	353–990	2	Plug–Hose (Incl. Ref. #4)
4	237–78	2	O–Ring
5	69–5890	1	Tube–Hydraulic
6	237–21	2	O–Ring
7	340–92	2	Fitting–Hydraulic Straight (Incl. Ref. #6 & 8)
8	237–78	3	O–Ring
9	69–5680	1	Tube–Hydraulic
10	95–5634	1	Valve–Cartridge, Hydraulic (Incl. Ref. #11)
11	95–5641	1	Kit–Seal
12	353–991	8	Plug–Hole (Incl. Ref. #13)
13	237–156	8	O–Ring
14	69–4070	1	Manifold–Balance, Counter
15	95–5632	1	Valve–Cartridge, Hydraulic (Incl. Ref. #2)

Ref. No.	Part No.	Qty.	Description
16	353–566	1	Tee–Hydraulic (Incl. Ref. #8)
17	92–4967	1	Tube–Hydraulic
18	69–5850	1	Tube–Hydraulic
19	69–5910	1	Tube–Hydraulic
20	69–5710	1	Tube–Hydraulic
21	237–22	7	O–Ring
22	237–30	2	O–Ring
23	340–4	2	Fitting–Straight, Hydraulic (Incl. Ref. #22 & 24)
24	237–79	2	O–Ring
25	93–7192	1	Hose–Hydraulic, Diagnostic
26	340–2	5	Fitting–Straight, Hydraulic (Incl. Ref. #21 & 27)
27	237–42	6	O–Ring
28	69–5870	1	Tube–Hydraulic
29	95–5642	3	Kit–Seal
30	95–5633	2	Valve–Cartridge, Hydraulic (Incl. Ref. #29)
31	69–5820	1	Tube–Hydraulic
32	69–5830	1	Tube–Hydraulic
33	69–5730	1	Tube–Hydraulic

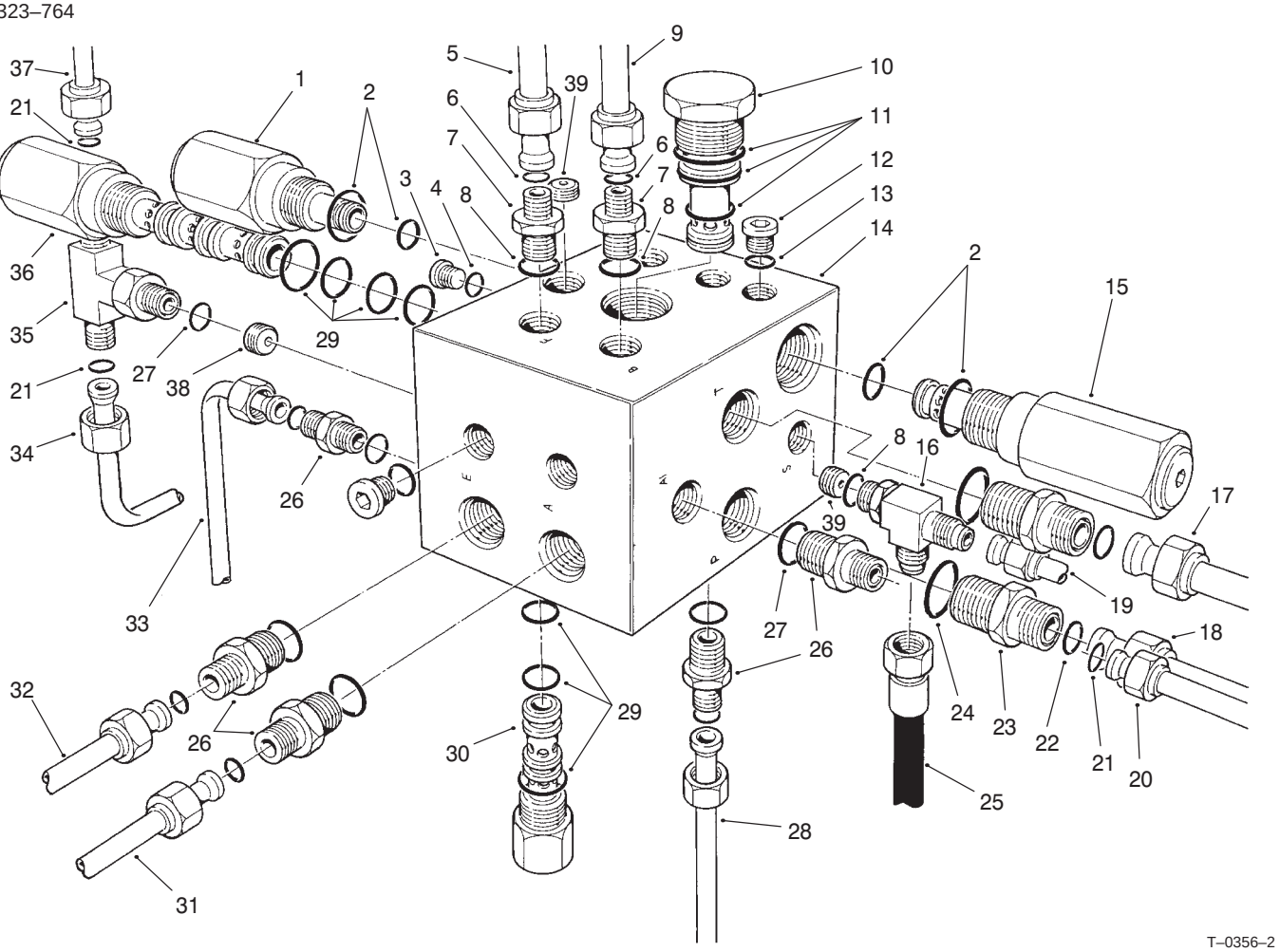

Counterbalance Manifold Assembly (Continued)

Ref. No.	Part No.	Qty.	Description
34	69–5860	1	Tube–Hydraulic
35	340–94	1	Tee–Hydraulic (Incl. Ref. #21 & 27)
36	95–5631	1	Valve–Cartridge, Hydraulic (Incl. Ref. #29)
37	69–5920	1	Tube–Hydraulic
*	95–5907	1	Manifold–Counterbalance (Incl. Ref. #1–4, 10–15, 29, 30 & 36)
38	69–4140	1	Plug–Orifice .120mm
39	69–4130	2	Plug–Orifice .047mm

Ref. No.	Part No.	Qty.	Description

* Not Illustrated

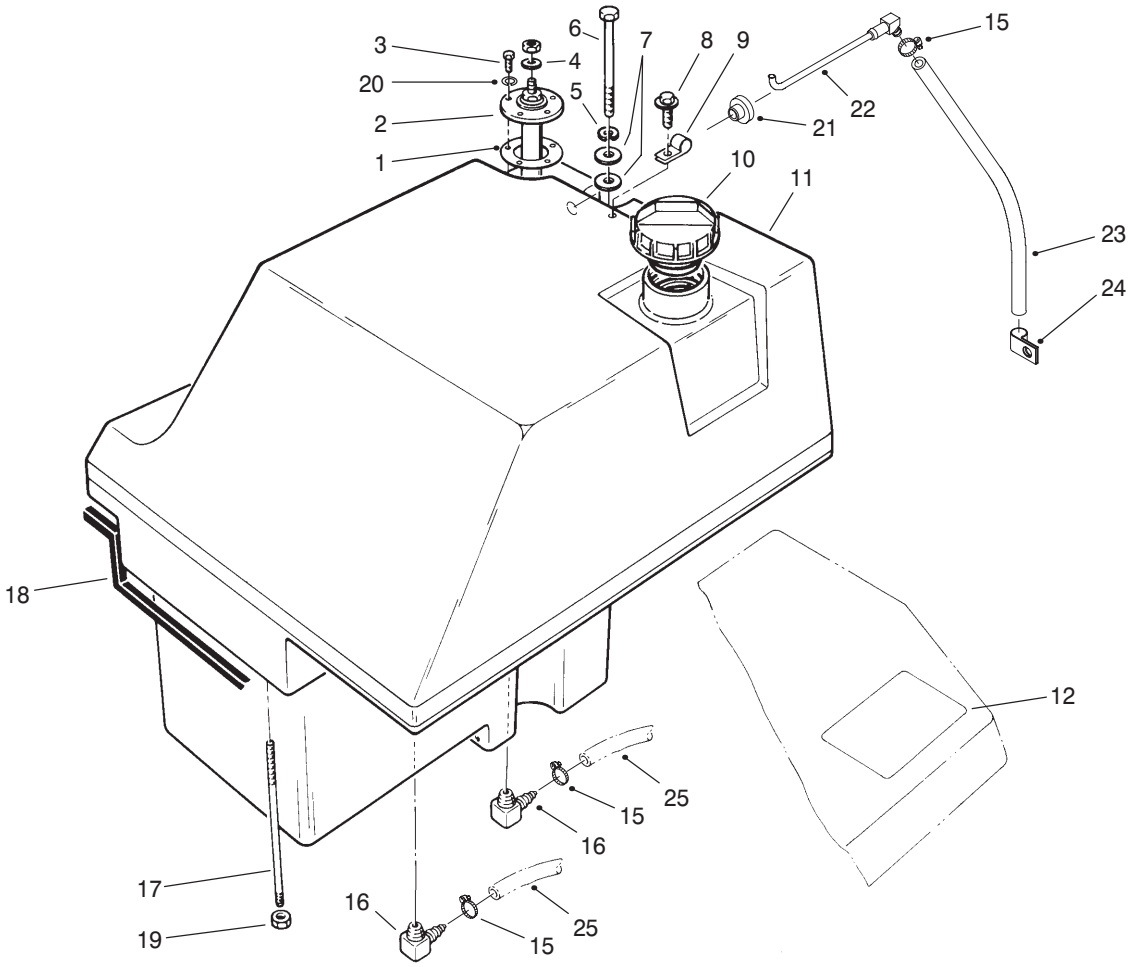

Fuel Tank Assembly

Ref. No.	Part No.	Qty.	Description
1	62–7650	1	Gasket–Sensing Unit, Level
2	70–6990	1	Level Sensing Unit ASM
3	32122–24	5	Screw–HH
4	5–3637	1	Spacer–Terminal
5	3253–21	1	Washer–Lock
6	323–39	1	Screw–HH
7	3256–5	2	Washer–Flat
8	3234–13	1	Screw–HWH
9	2412–89	1	Clamp–R
10	93–3102	1	Cap–Fuel
11	94–2865	1	Tank–Fuel
12	95–0822	1	Decal–Warning
15	2412–108	3	Clamp–Hose
16	353–536	2	Fitting–Fuel, 90°
17	72–9550	1	Stud–Tank, Fuel
18	68–7572	1	Strip–Sealing
19	3296–39	1	Nut–Lock
20	3253–15	5	Washer–Lock
21	46–6560	1	Bushing
22	94–3310	1	Tube–Vent
23	94–3311	1	Hose–Fuel
24	2412–138	1	Clamp–R
25	37–9560	2	Hose–Fuel

Ref. No.	Part No.	Qty.	Description

3323–764

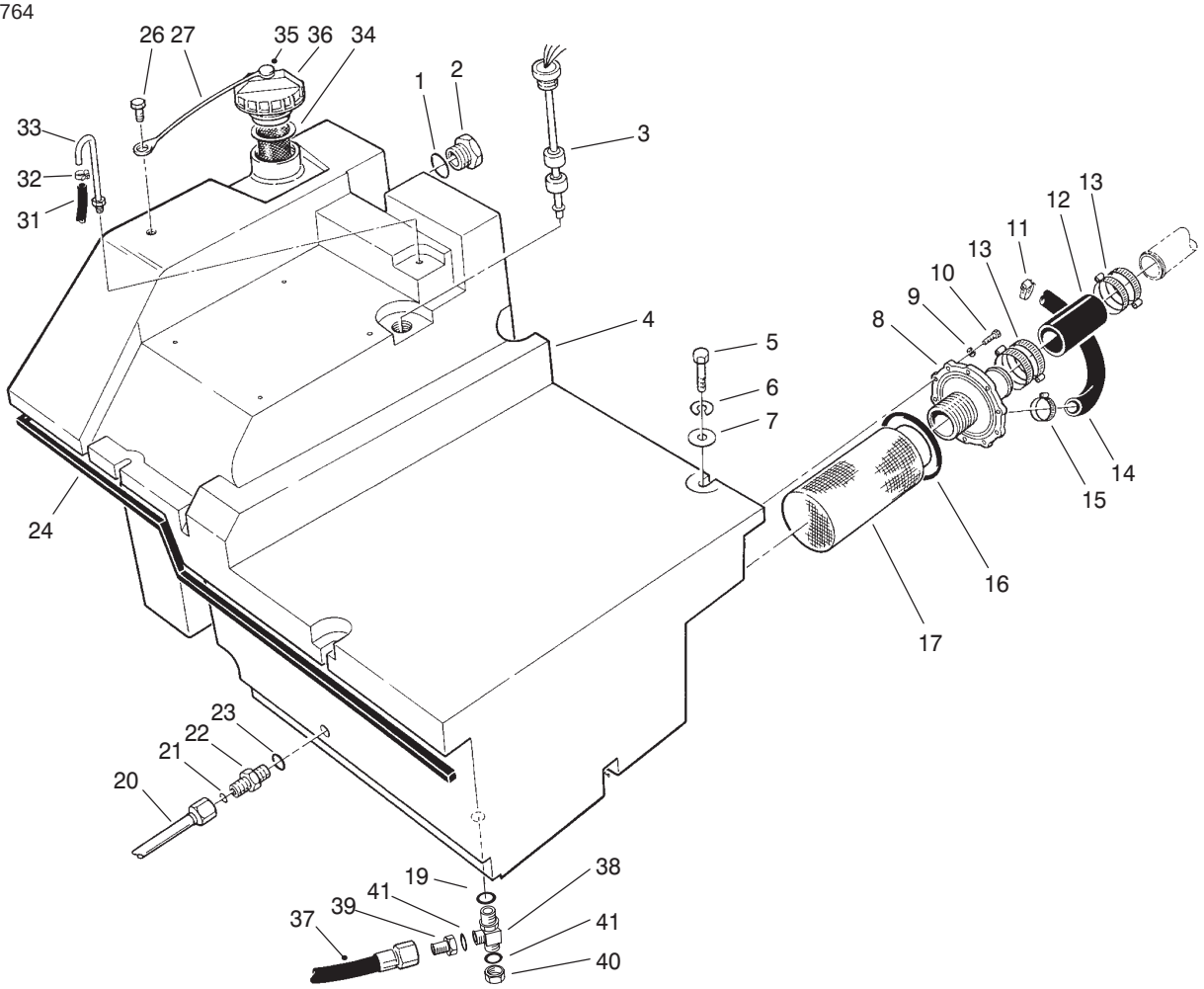

T–0354–3

Hydraulic Tank Assembly

Ref. No.	Part No.	Qty.	Description
1	237–81	1	O–Ring
2	69–1170	1	Gauge–Sight (Incl. Ref. #1)
3	85–6260	1	Unit–Sensing, Level
4	94–1893	1	Tank–Hydraulic
5	323–10	4	Screw–HH
6	3253–21	4	Washer–Lock
7	5–3177	4	Washer–Flat
8	69–1610	1	Adapter–Hose, Suction
9	3253–3	10	Washer–Lock
10	321–5	10	Screw–HH
11	2412–34	1	Clamp–Hose
12	69–5640	1	Hose–Suction
13	2412–42	4	Clamp–Hose
14	94–1892	1	Hose–Suction, Auxiliary
15	2412–3	1	Clamp–Hose
16	237–157	1	O–Ring
17	69–1650	1	Screen–Suction
19	237–80	1	O–Ring
20	69–5800	1	Tube–Hydraulic
21	237–22	2	O–Ring
22	340–3	1	Fitting–Straight, Hydraulic (Incl. Ref. #21 & 23)
23	237–79	1	O–Ring

Ref. No.	Part No.	Qty.	Description
24	68–7571	1	Strip–Sealing
26	321–2	1	Screw–HH
27	75–0540	1	Tether–Cap, Reservoir
31	71–2680	1	Hose–Vent
32	2412–108	1	Clamp–Hose
33	69–4280	1	Tube–Vent, Hydraulic
34	61–2790	1	Filler–Screen
35	2410–73	1	Pin–Tether
36	93–3103	1	Cap–Hydraulic (Incl. Ref. #27 & 35)
37	92–4970	1	Hose–Hydraulic
38	340–22	1	Fitting–Tee (Incl. Ref. #19 & 41)
39	98–7067	1	Fitting–Reducer
40	340–150	1	Cap–Hydraulic
41	237–65	2	O–Ring

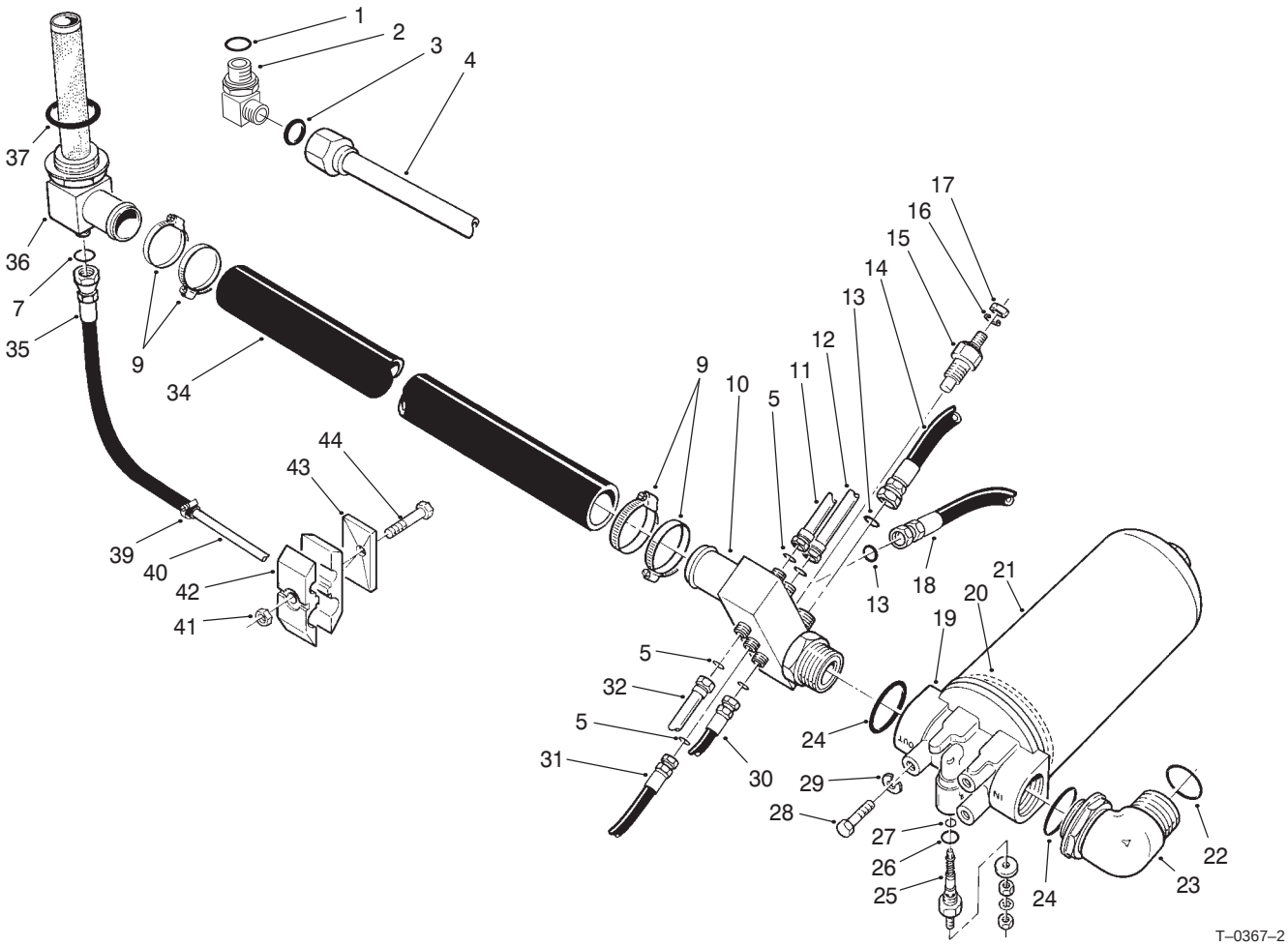

Hydraulic Filter Assembly

Ref. No.	Part No.	Qty.	Description
1	237–80	1	O–Ring
2	340–17	1	Fitting–Hydraulic, 90° (Incl. Ref. #1 & 3)
3	237–65	1	O–Ring
4	92–4807	1	Tube–Hydraulic
5	237–22	3	O–Ring
7	237–58	1	O–Ring
9	2412–92	4	Clamp–Hose
10	69–5410	1	Manifold–Return (Incl. Ref. #5, 13 & 24)
11	69–6000	1	Tube–Hydraulic (Incl. Ref. #5)
12	69–5990	1	Tube–Hydraulic (Incl. Ref. #5)
13	237–30	2	O–Ring
14	69–5460	1	Hose–Hydraulic
15	39–7593	1	Unit–Sending, Temp.
16	3253–2	1	Washer–Lock
17	3219–14	1	Nut–Hex
18	69–5650	1	Hose–Hydraulic
19	69–1700	1	Hydraulic Filter ASM (Incl. Ref. #20, 21 & 25–27)
20	237–155	1	O–Ring
21	69–1720	1	Element–Filter (Incl. Ref. #20)

Ref. No.	Part No.	Qty.	Description
22	340–65	1	O–Ring
23	340–79	1	Fitting–Hydraulic, 90° (Incl. Ref. #22 & 24)
24	237–101	2	O–Ring
25	69–1710	1	Indicator–Filter (Incl. Ref. # 26 & 27)
†26		1	O–Ring
†27		1	O–Ring
28	323–4	3	Screw–HH
29	3253–21	3	Washer–Lock
30	69–5440	1	Hose–Hydraulic
31	69–8440	1	Hose–Hydraulic
32	69–5950	1	Tube–Hydraulic
34	74–2660	1	Hose–Return, Hydraulic
35	92–2352	1	Hose–Hydraulic
36	92–2351	1	Fitting–Return, Tank (Incl. Ref. #7 & 37)
37	340–136	1	O–Ring
39	2412–129	1	Clamp–Hose
40	92–1742	1	Tube–Hydraulic
41	32152–1	3	Nut–Lock
42	56–7978	6	Clamp Half–Hydraulic Line
43	69–9761	3	Plate–Cover
44	322–12	3	Screw–HH

† Not Serviceable Separately

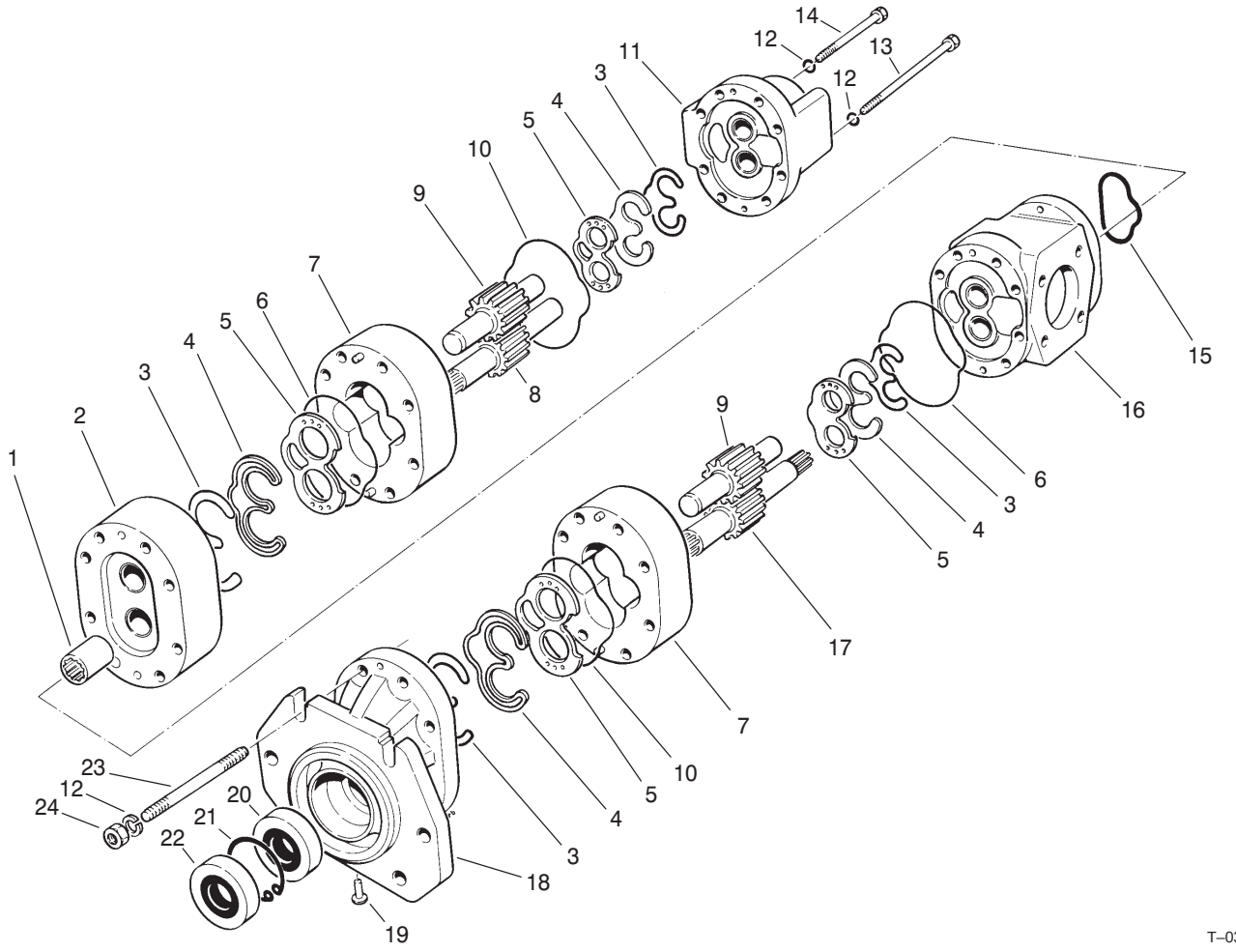

T–0382–1

Double Gear Pump No. 69–2050–03

Ref. No.	Part No.	Qty.	Description
1	69–2110	1	Coupling
2	69–2170	1	Adapter Section ASM
3	59–7990	4	Seal–Gland
4	59–8470	4	Retainer–Seal
5	69–2070	4	Plate–Flex
6	69–2200	2	O–Ring
7	69–2080	2	Center Section ASM
8	69–2090	1	Gear/Shaft–Drive, Rear
9	59–8600	2	Gear–Driven
10	69–2120	2	O–Ring
11	69–2100	1	Rear Cover ASM
12	59–7590	16	Washer–Lock
13	69–2150	4	Screw–HH
14	69–2140	4	Screw–HH
15	69–2210	1	O–Ring
16	69–2160	1	Port Section ASM
17	59–8500	1	Gear/Shaft–Drive, Front
18	69–2060	1	Shaft End Cover ASM
19	69–2130	1	Plug
20	59–8590	1	Seal–Shaft
21	59–8580	1	Ring–Retaining
22	59–8570	1	Seal–Shaft
23	59–7970	8	Stud–Threaded
24	59–7580	8	Nut–Hex

Ref. No.	Part No.	Qty.	Description
*	59–8610	1	Kit–Repair (Incl. Ref. #3, 4, 20 & 22)

* Not Illustrated

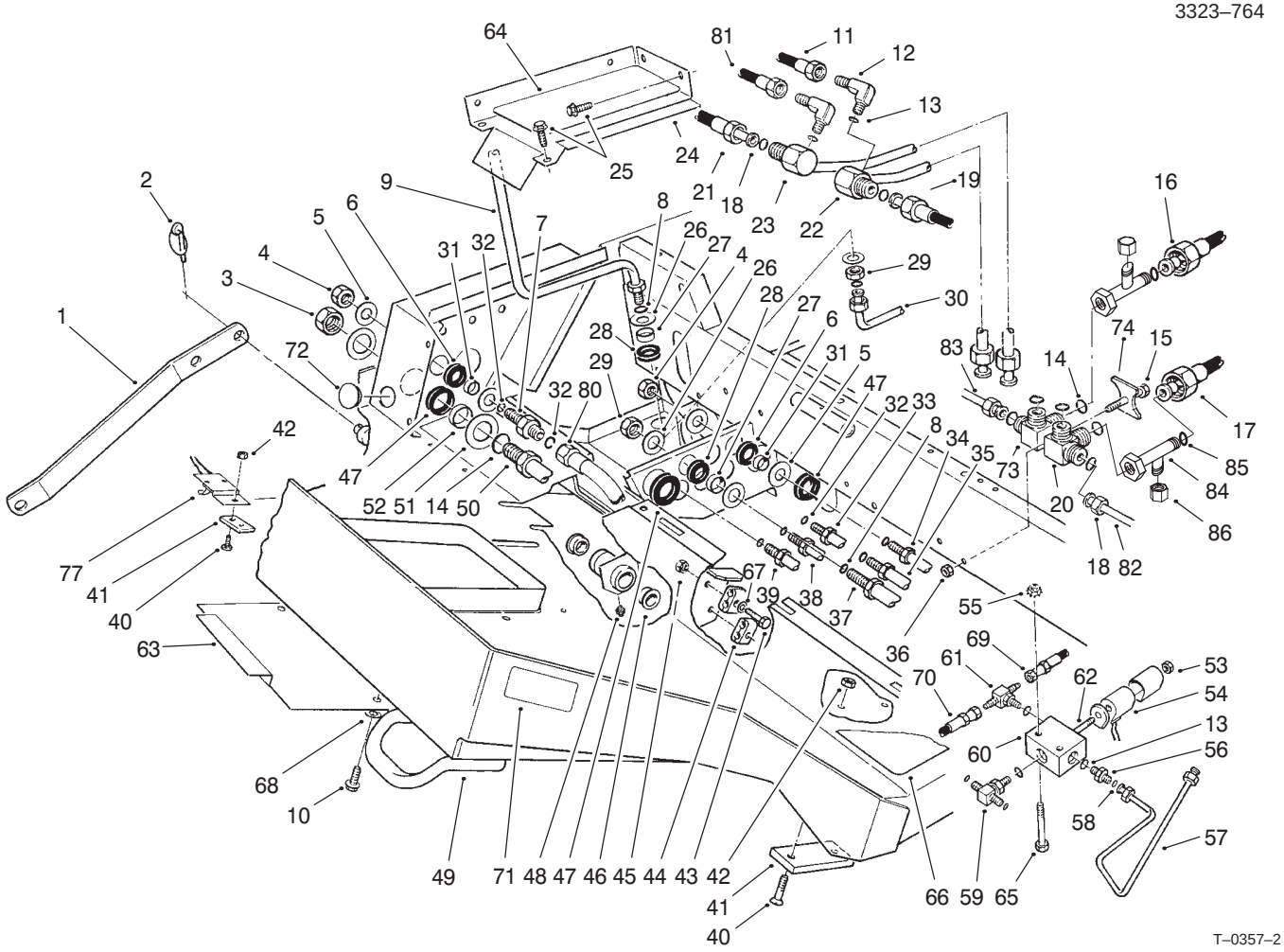

Frame Assembly

Ref. No.	Part No.	Qty.	Description
1	85–6190–01	1	Link–Tilt, Deck
2	3290–495	2	Pin–Lynch
3	340–126	2	Nut–Bulkhead
4	340–70	6	Nut–Bulkhead
5	69–8940	12	Washer
6	240–4	6	Grommet
7	340–71	1	Fitting–Bulkhead, Hydraulic (Incl. Ref. #32)
8	237–30	3	O–Ring
9	92–4967	1	Tube–Hydraulic (Incl. Ref. #8)
10	3234–28	2	Screw–HFH
11	93–7422	1	Hose–Hydraulic
12	353–375	2	Fitting–Hydraulic, 90° (Incl. Ref. #13)
13	237–78	5	O–Ring
14	237–58	4	O–Ring
15	3274–86	1	Screw–HSH
16	100–8014	1	Hose–Hydraulic
17	100–8015	1	Hose–Hydraulic
18	237–65	6	O–Ring
19	93–7177	1	LH Traction Tube ASM
20	83–8350	1	Fitting–Traction, LH (Incl. Ref. #14 & 18)
21	93–7178	1	RH Traction Tube ASM

Ref. No.	Part No.	Qty.	Description
22	69–6200	1	Tube–Hydraulic (Incl. Ref. #18)
23	69–6190	1	Tube–Hydraulic (Incl. Ref. #18
24	71–2450–01	1	Cover–Access
25	3234–14	4	Screw–HFH
26	69–8930	4	Washer
27	69–8960	2	Spacer
28	240–5	2	Grommet
29	340–127	2	Nut–Bulkhead
30	85–6150	1	Tube–Hydraulic
31	69–8970	6	Spacer
32	237–22	7	O–Ring
33	69–6050	1	Tube–Hydraulic (Incl. Ref. #32)
34	69–6040	1	Tube–Hydraulic (Incl. Ref. #32)
35	69–6030	1	Tube–Hydraulic (Incl. Ref. #32)
36	32152–1	1	Nut–Lock
37	69–5790	1	Tube–Hydraulic (Incl. Ref. #8)
38	69–6060	1	Tube–Hydraulic (Incl. Ref. #32)
39	93–7426	1	Tube–Hydraulic (Incl. Ref. #32)

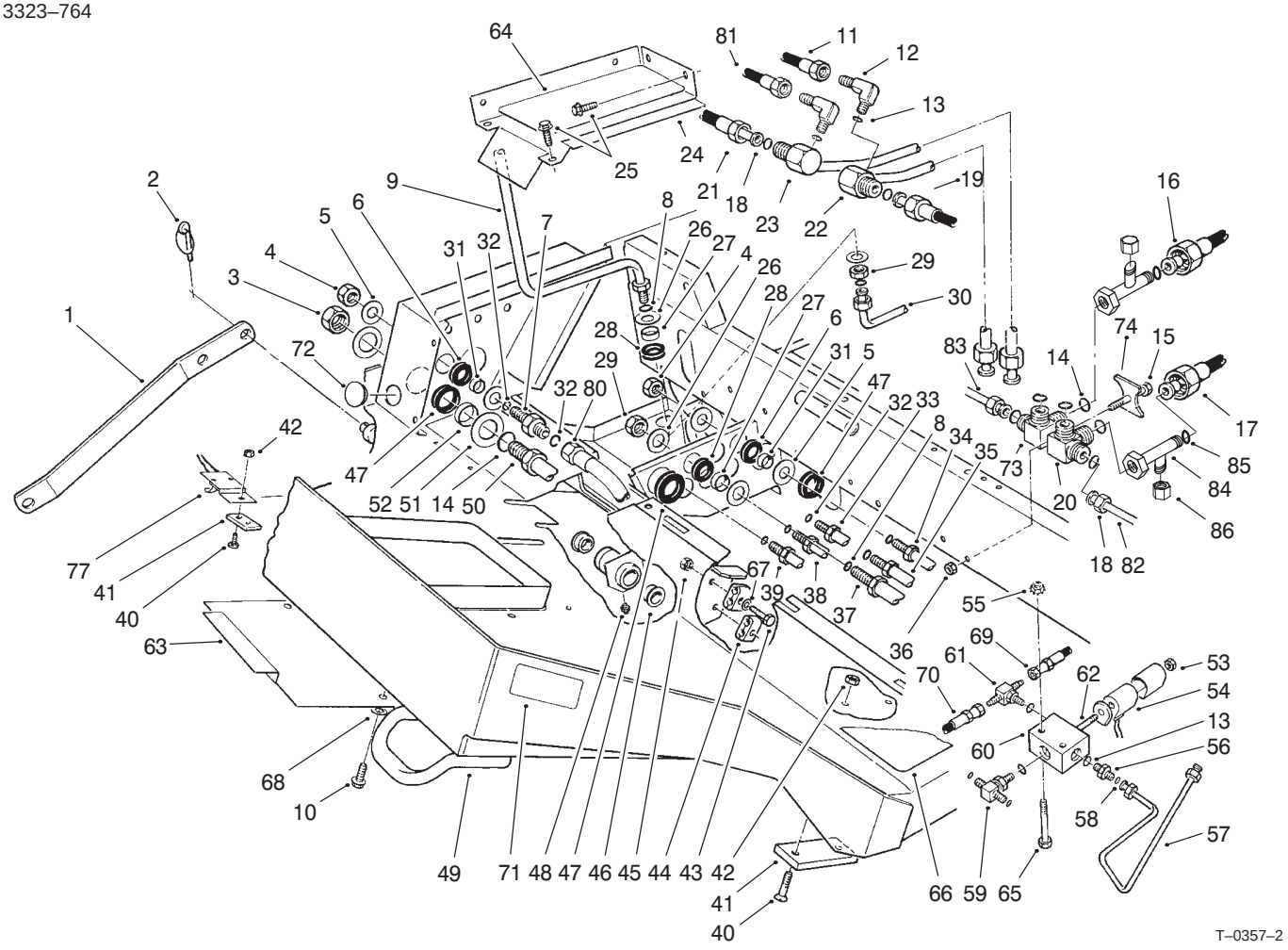

Frame Assembly (Continued)

Ref. No.	Part No.	Qty.	Description
40	32108–103	4	Screw–Machine, FH
41	69–9300	2	Cushion–Rubber
42	32152–1	4	Nut–Lock
43	321–9	2	Screw–HH
44	56–7973	4	Clamp Half–Line, Hydraulic
45	32152–4	2	Nut–Lock
46	256–247	2	Bushing–Flange
47	240–7	4	Grommet
48	302–5	1	Fitting–Grease
49	69–0100–01	1	Frame ASM (Incl. Ref. #46 & 48)
50	69–6100	1	Tube–Pressure, Hydraulic (Incl. Ref. #14)
*	69–5810	1	Tube–Return, Hydraulic (Incl. Ref. #14)
51	69–8910	4	Washer
52	69–8900	2	Spacer
53	3220–4	1	Nut
54	92–3048	3	Kit–Coil, Solenoid
55	32149–2	2	Nut–Keps
56	340–92	1	Fitting–Hydraulic (Incl. Ref. #13 & 58)
57	69–5950	1	Tube–Hydraulic

Ref. No.	Part No.	Qty.	Description
58	237–21	3	O–Ring
59	340–125	1	Fitting–Hydraulic (Incl. Ref. #13 & 58)
†60		1	Body–Valve
61	93–9988	1	Fitting–Hydraulic (Incl. Ref. #13)
62	95–5638	1	Valve–Solenoid (Incl. Ref. #53)
63	69–9470–01	1	Cover–Access
64	71–0430	1	Cover–Abrasive
65	321–11	2	Screw–HH
66	71–0420	1	Floor–Abrasive
67	3256–56	2	Washer–Flat
68	3256–23	2	Washer–Flat
69	100–4150	1	Hose–Diagnostic
70	93–7193	1	Hose–Diagnostic
71	72–4080	2	Decal–Danger
72	2410–10	1	Plug–Button
73	83–8360	1	Fitting–Traction, RH
74	83–8370	1	Plate–Clamp
77	93–7038	1	Switch
80	92–4970	1	Hose–Hydraulic
81	93–7192	1	Hose–Diagnostic
82	83–4330	1	LH Traction Tube ASM
83	83–4340	1	RH Traction Tube ASM
*	95–5917	1	Kit–Seal, Valve

* Not Illustrated
† Not Serviceable Separately

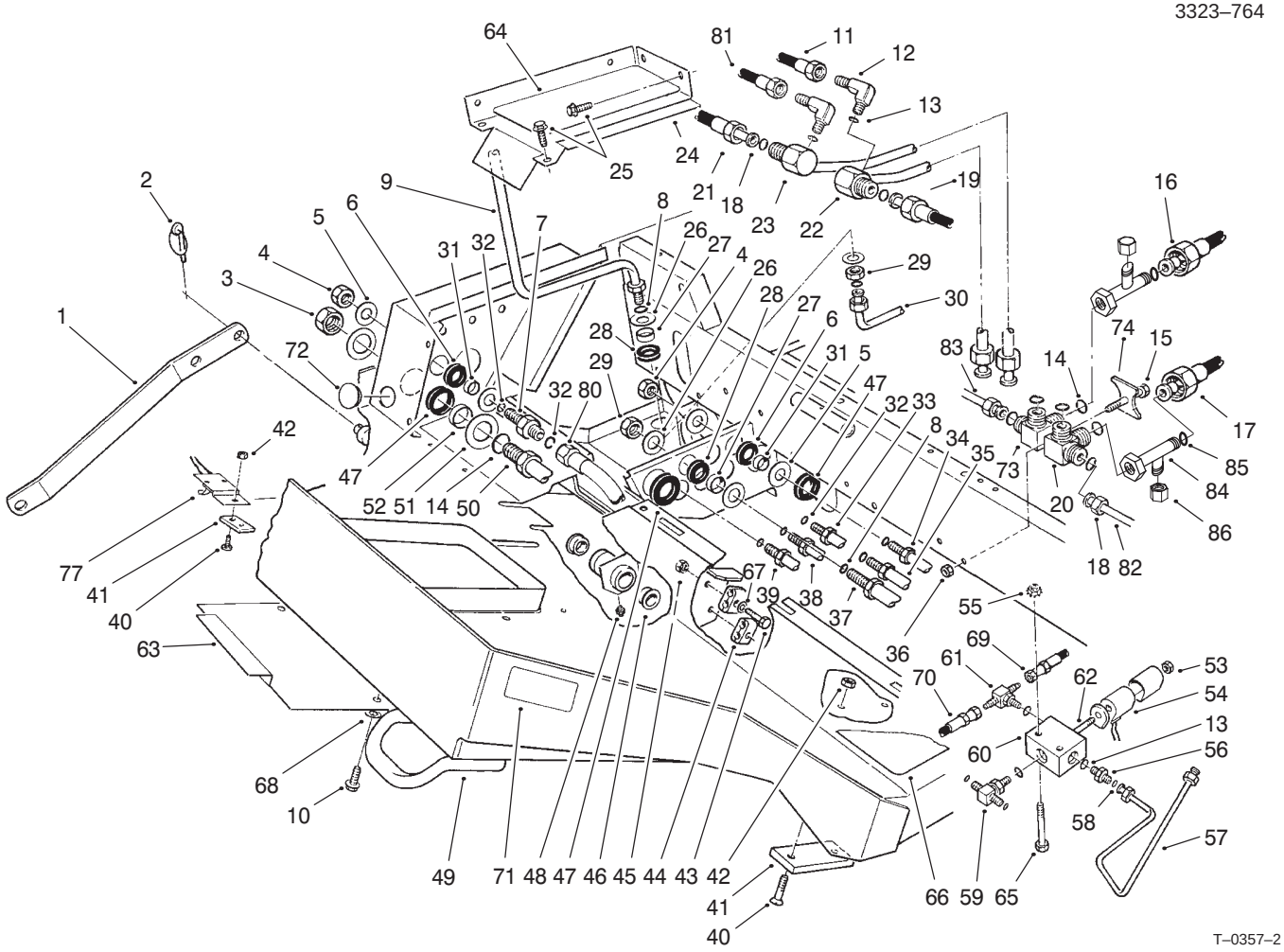

T–0357–2

Frame Assembly (Continued)

Ref. No.	Part No.	Qty.	Description
*	95–5916	1	Solenoid Valve ASM (Incl. Ref. #53, 54, 60, 62 & Valve Seal Kit #92–3049)
84	92–4748	2	Fitting–Tee (Incl. Ref. #85)
85	237–58	1	O–ring
86	95–0979	2	Fitting–Cap

Ref. No.	Part No.	Qty.	Description

* Not Illustrated

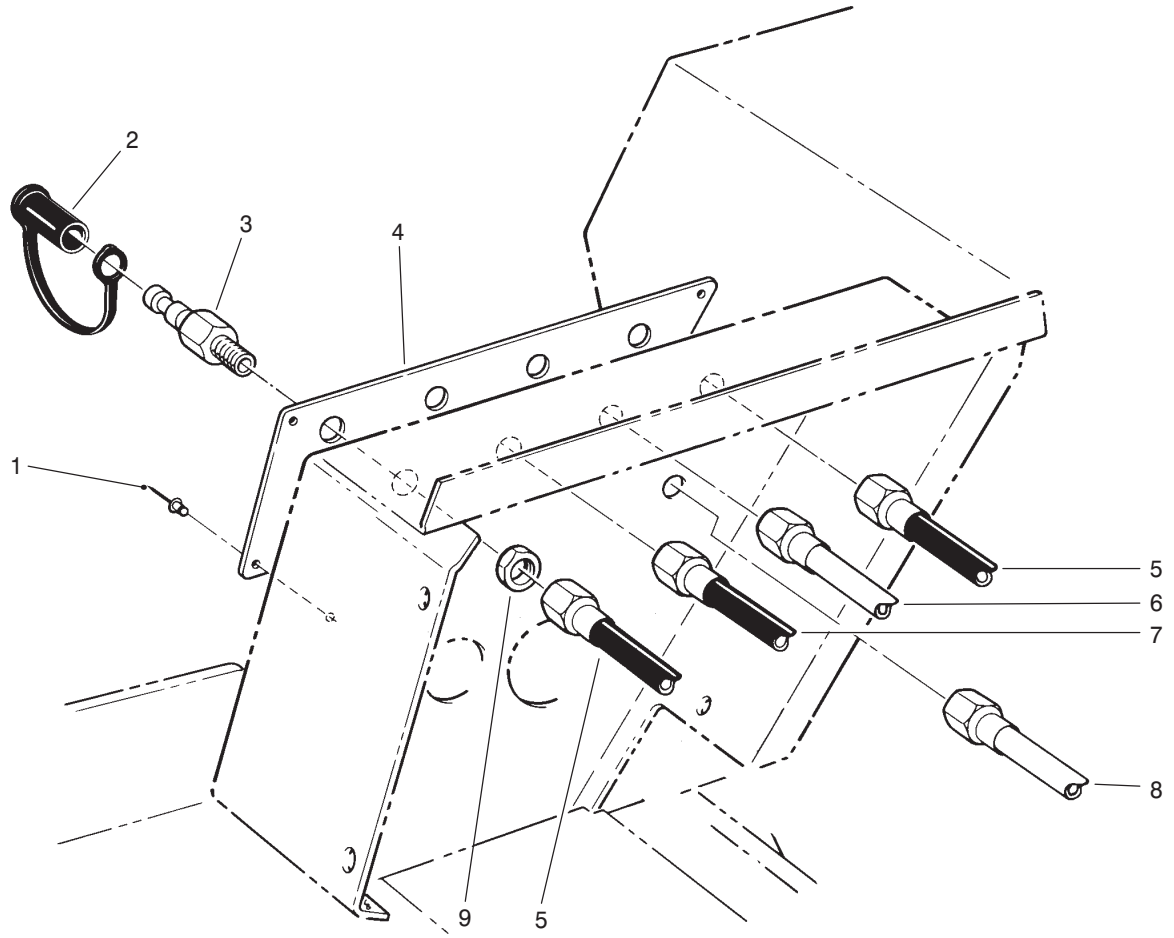

T–3077

Hydraulic System Diagnostic Panel Assembly

Ref. No.	Part No.	Qty.	Description
1	3269–25	4	Rivet–Pop
2	354–79	5	Cap–Fitting
3	353–997	5	Fitting–Bulkhead, Hydraulic (Incl. Ref. #12)
4	99–1900	1	Panel–Diagnostic
5	93–7422	1	Hose–Hydraulic, Diagnostic
6	69–5910	1	Tube–Hydraulic, Diagnostic
7	93–7193	1	Hose–Hydraulic, Diagnostic
8	69–5920	1	Tube–Diagnostic
9	3220–4	5	Nut–Bulkhead

Ref. No.	Part No.	Qty.	Description

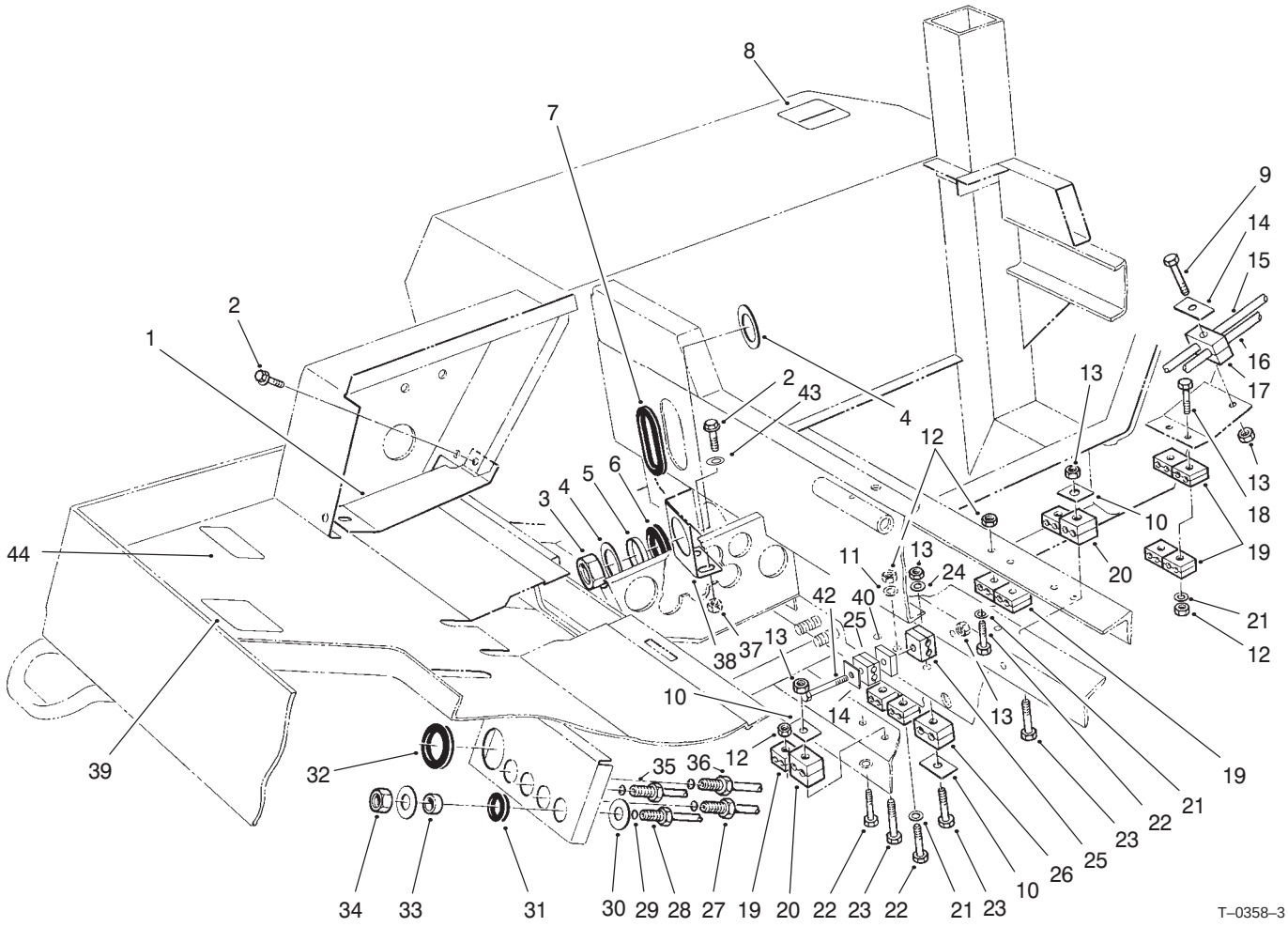

Hydraulic Line Clamps Assembly

Ref. No.	Part No.	Qty.	Description
1	69–9330–01	1	Cover
2	3234–14	6	Screw–HFH
3	340–128	2	Nut–Bulkhead
4	69–8920	4	Washer
5	69–8950	2	Spacer
6	240–2	2	Grommet
7	237–164	1	Grommet
8	95–0821	1	Decal–Oil, Hydraulic
9	322–12	2	Screw–HH
10	69–9760	3	Plate–Cover
11	3256–22	2	Washer–Flat
12	32152–4	6	Nut–Lock
13	32152–1	8	Nut–Lock
14	69–9761	5	Plate–Cover
15	99–4964	1	Tube–Hydraulic
16	100–2515	1	Tube–Hydraulic
17	56–7974	2	Clamp Half–Hydraulic Line
18	321–15	2	Screw–HH
19	56–7973	20	Clamp Half–Hydraulic Line
20	56–7972	4	Clamp Half–Hydraulic Line
21	3256–56	8	Washer–Flat
22	321–9	6	Screw–HH
23	322–10	3	Screw–HH

Ref. No.	Part No.	Qty.	Description
24	3256–23	1	Washer–Flat
25	56–7978	12	Clamp Half–Hydraulic Line
26	56–7971	2	Clamp Half–Hydraulic Line
27	93–7179	1	Tube–Hydraulic (Incl. Ref. #29)
28	69–5800	1	Tube–Hydraulic (Incl. Ref. #29)
29	237–21	4	O–Ring
30	69–8980	8	Washer
31	240–6	4	Grommet
32	240–7	1	Grommet
33	69–8990	4	Spacer
34	340–78	4	Nut–Bulkhead
35	69–6080	1	Tube–Hydraulic (Incl. Ref. #29)
36	69–6070	1	Tube–Hydraulic (Incl. Ref. #29)
37	32151–1	4	Nut–Lock
38	71–2560–03	2	Support–Bulkhead
39	69–0940	1	Decal–Caution
40	95–5616–03	4	Spacer
42	322–38	2	Screw–HH
43	3256–23	4	Washer–Flat
44	98–4387	1	Decal–Caution

Hydraulic Schematic

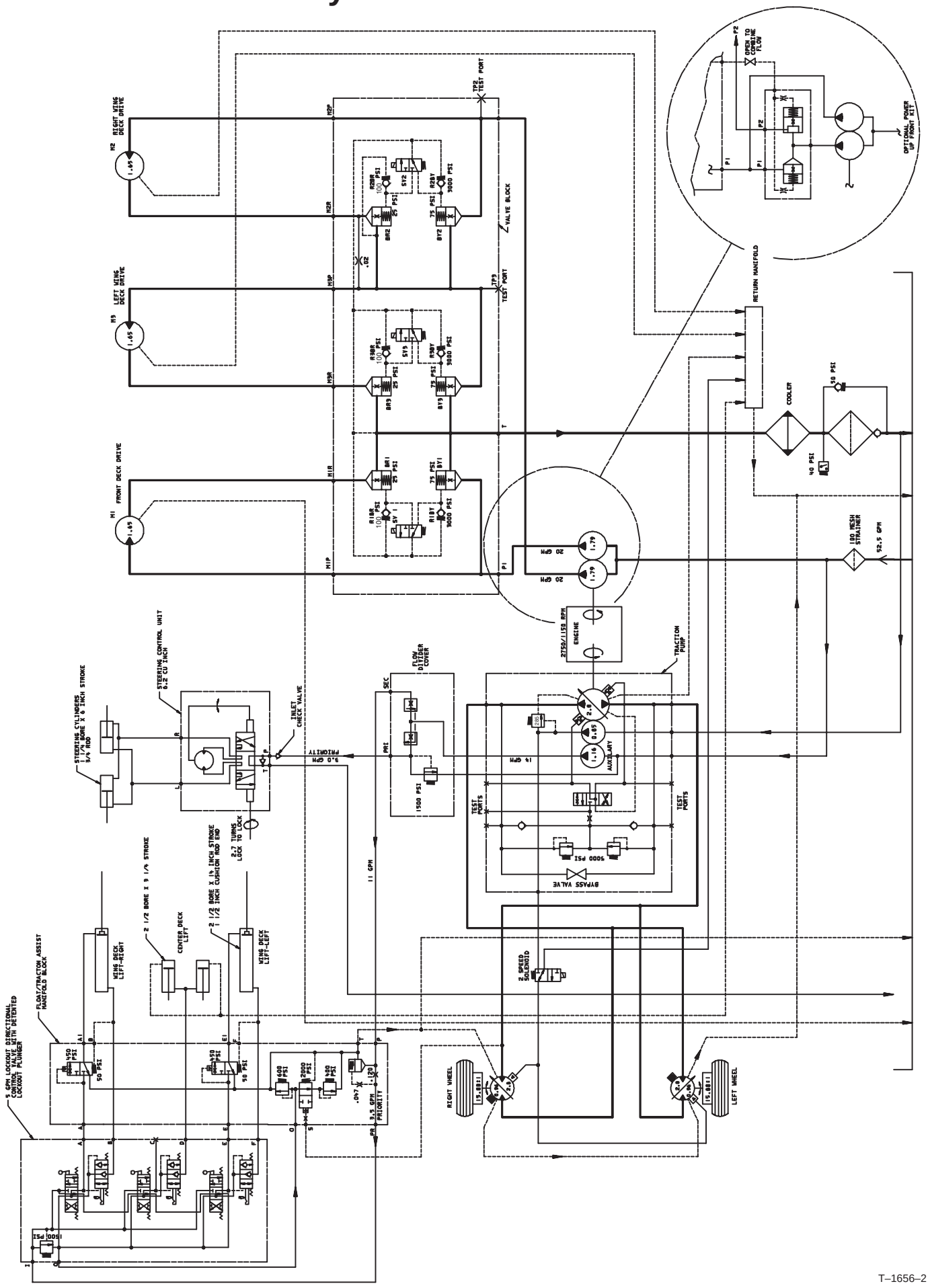

T–1656–2

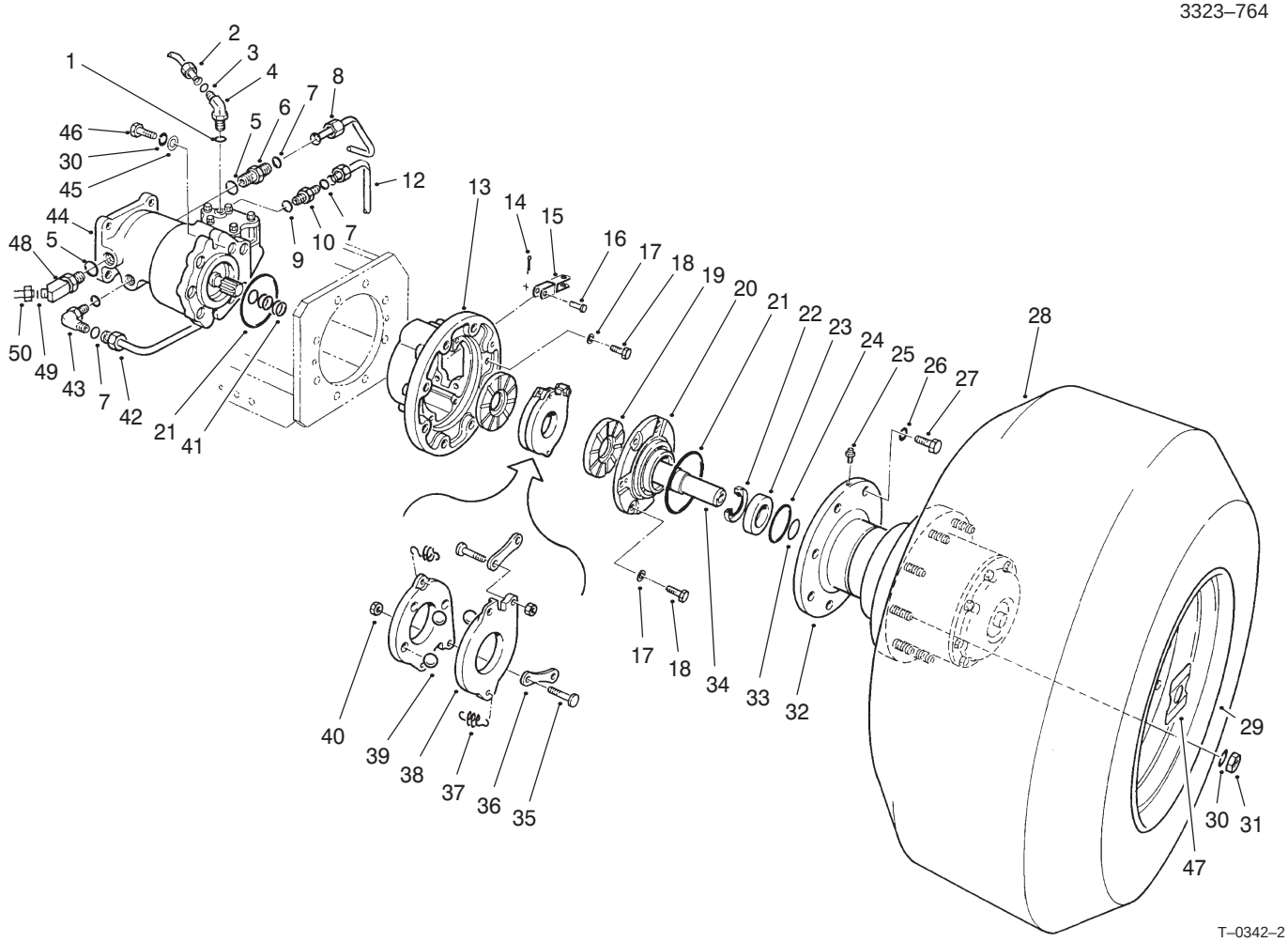

Front Wheel Assembly

Ref. No.	Part No.	Qty.	Description
1	237–42	2	O–Ring
2	69–5940	1	Tube–Hydraulic, LH
*	69–5930	1	Tube–Hydraulic, RH
3	237–21	2	O–Ring
4	340–82	2	Fitting–Elbow, Hydraulic (Incl. Ref. #1 & 3)
5	237–146	4	O–Ring
6	340–91	2	Fitting–Straight, Hydraulic (Incl. Ref. #5 & 7)
7	237–58	7	O–Ring
8	83–4330	1	Tube–Hydraulic, LH
*	83–4340	1	Tube–Hydraulic, RH
9	237–81	4	O–Ring
10	340–9	1	Fitting–Hydraulic Straight, LH (Incl. Ref. #7 & 9)
*	340–148	1	Fitting–Hydraulic Tee, RH (Incl. Ref. #7 & 9)
12	92–1742	1	Tube–Hydraulic, LH
*	92–4807	1	Tube–Hydraulic, RH Run
*	85–6150	1	Tube–Hydraulic, RH Branch
13	71–4010–03	2	Housing–Brake

Ref. No.	Part No.	Qty.	Description
14	3272–6	2	Pin–Cotter
15	71–3880	2	Clevis–Cable, Brake
16	283–2	2	Pin–Clevis
17	3253–21	14	Washer–Lock
18	323–6	4	Screw–HH
19	71–0470	4	Disc–Middle
20	71–3990	2	Cap–Housing, Brake
21	237–158	4	O–Ring
22	253–156	2	Seal–Oil
23	251–340	2	Bearing–Ball
24	32120–22	2	Ring–Retaining, Inter.
25	302–39	2	Vent
26	3253–8	16	Washer–Lock
27	327–22	16	Screw–HH
28	69–9800	2	Tire
*	58–5620	2	Tube–Inner
*	231–140	2	Tire (Optional)
29	71–2470	2	Rim
30	3253–7	22	Washer–Lock
31	3219–5	18	Nut–Hex
32	69–1730	2	Planetary Gear Drive ASM
33	32120–84	2	Ring–Retaining, Ext.
34	71–3810	2	Coupling–Motor, Hydraulic
35	69–9970	4	Stud

* Not Illustrated

3323–764

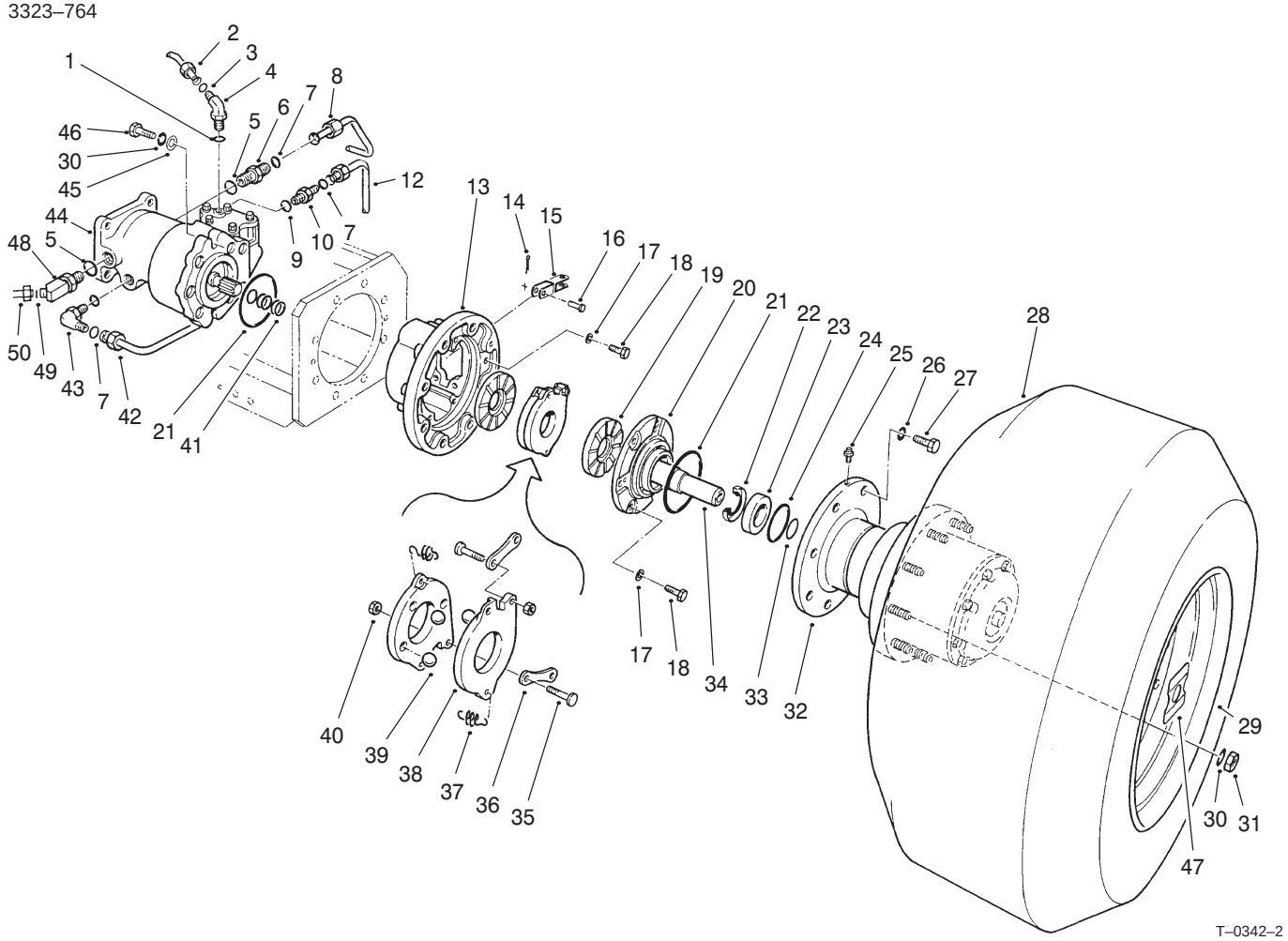

Front Wheel Assembly (Continued)

Ref. No.	Part No.	Qty.	Description
36	69–9960	4	Link
37	69–9950	4	Spring–Extension
38	69–9990	4	Disc–Actuating
39	69–9980	6	Ball
40	69–9940	4	Nut–Jam
41	253–157	6	Ring–Cup
42	92–1741	1	Tube–Hydraulic
43	340–142	2	Fitting–Elbow, Hydraulic (Incl. Ref. #9 & 11)
44	69–3050	2	Motor–Wheel, Hydraulic
45	3256–26	4	Washer–Flat
46	325–7	4	Screw–HH
47	72–4070	2	Decal–Danger
48	93–7176	2	Fitting–45° ORFS
49	237–65	2	O–Ring
50	93–7177	1	Tube–Hydraulic, LH
*	93–7178	1	Tube–Hydraulic, RH

Ref. No.	Part No.	Qty.	Description

* Not Illustrated

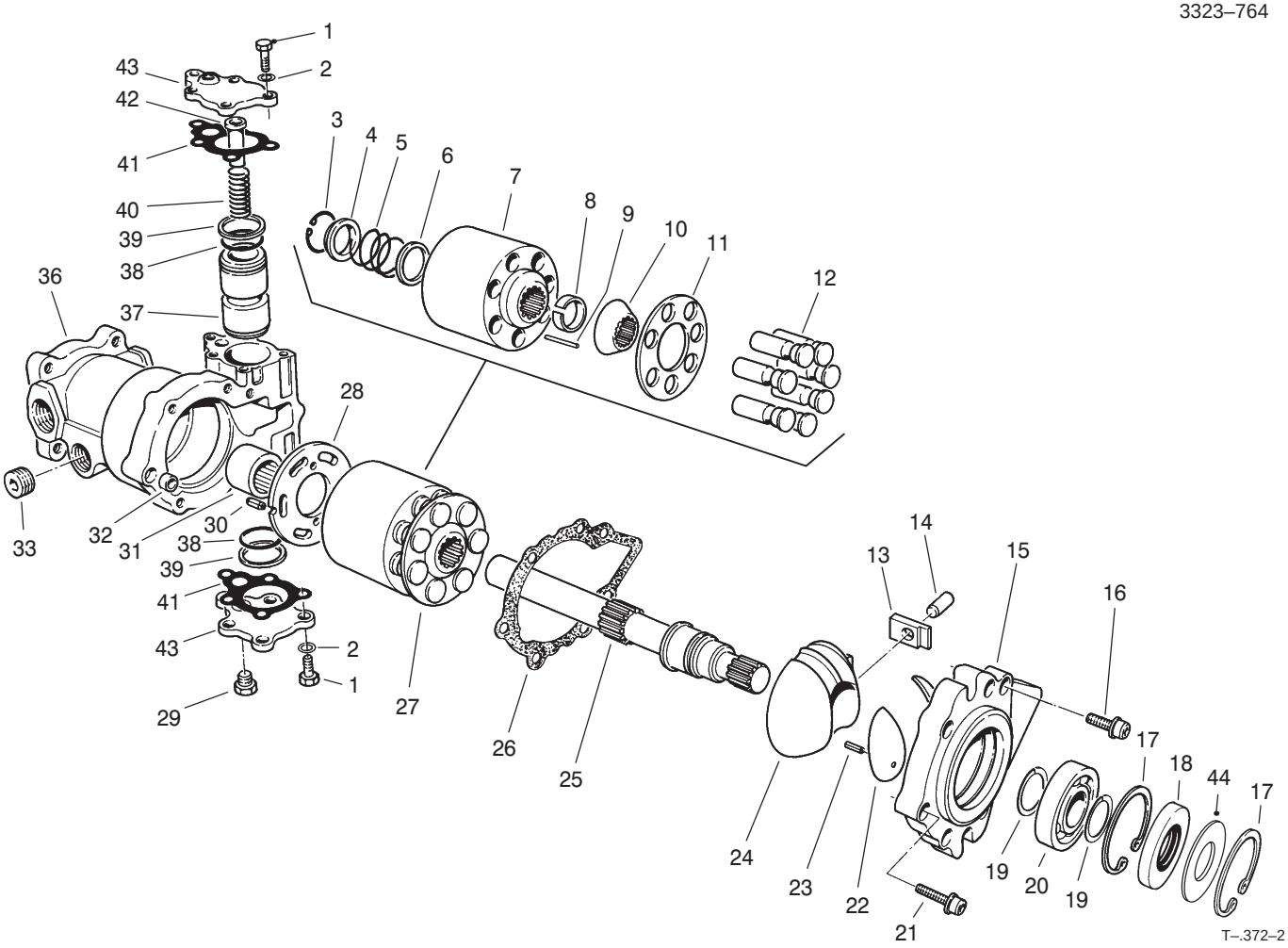

Wheel Motor No. 69–3050

Ref. No.	Part No.	Qty.	Description
1	69–3150	10	Screw–HH
2	69–3070	10	Washer–Plain
†3		1	Ring–Retaining
†4		1	Washer
†5		1	Spring–Compression
†6		1	Washer
†7		1	Block–Cylinder
†8		1	Retainer
†9		3	Pin–Hold Down, Slipper
†10		1	Guide–Retainer
†11		1	Guide–Slipper
†12		7	Piston ASM
13	69–3500	1	Bearing–Sleeve
14	69–3510	1	Pin
15	76–4610	1	Cover–Front
16	76–4590	6	Screw
17	69–3200	2	Ring–Retaining
18	69–3190	1	Seal–Lip
19	69–3170	2	Ring–Retaining
20	69–3210	1	Bearing–Ball
21	69–3960	1	Screw
22	69–3970	2	Bearing–Journal
23	69–3520	2	Pin–Spring
24	69–3980	1	Swashplate–Variable
25	69–3950	1	Shaft–Motor

Ref. No.	Part No.	Qty.	Description
26	76–4600	1	Gasket–Cover, Front
27	69–3910	1	Kit–Block, Cylinder (Incl. Ref. #3–12)
28	69–3990	1	Plate–Valve, Motor
29	69–3940	1	Plug
30	69–3450	1	Pin
31	69–3370	1	Bearing–Needle
32	69–3230	1	Pin–Spring
33	69–3130	1	Plug–Hole
†36		1	Housing
37	69–4020	1	Piston–Servo
38	69–3560	2	O–Ring
39	69–3570	2	Ring–Piston
40	69–4030	1	Spring–Servo
41	69–3710	2	Gasket–Cover, Servo
42	69–4040	1	Stop–Piston, Servo
43	69–3720	2	Cover–Servo
44	95–4400	1	Washer–Backup
*	69–3920	1	Kit–Piston Ring & O–Ring (Incl. Ref. #38 & 39)

* Not Illustrated
† Not Serviceable Separately

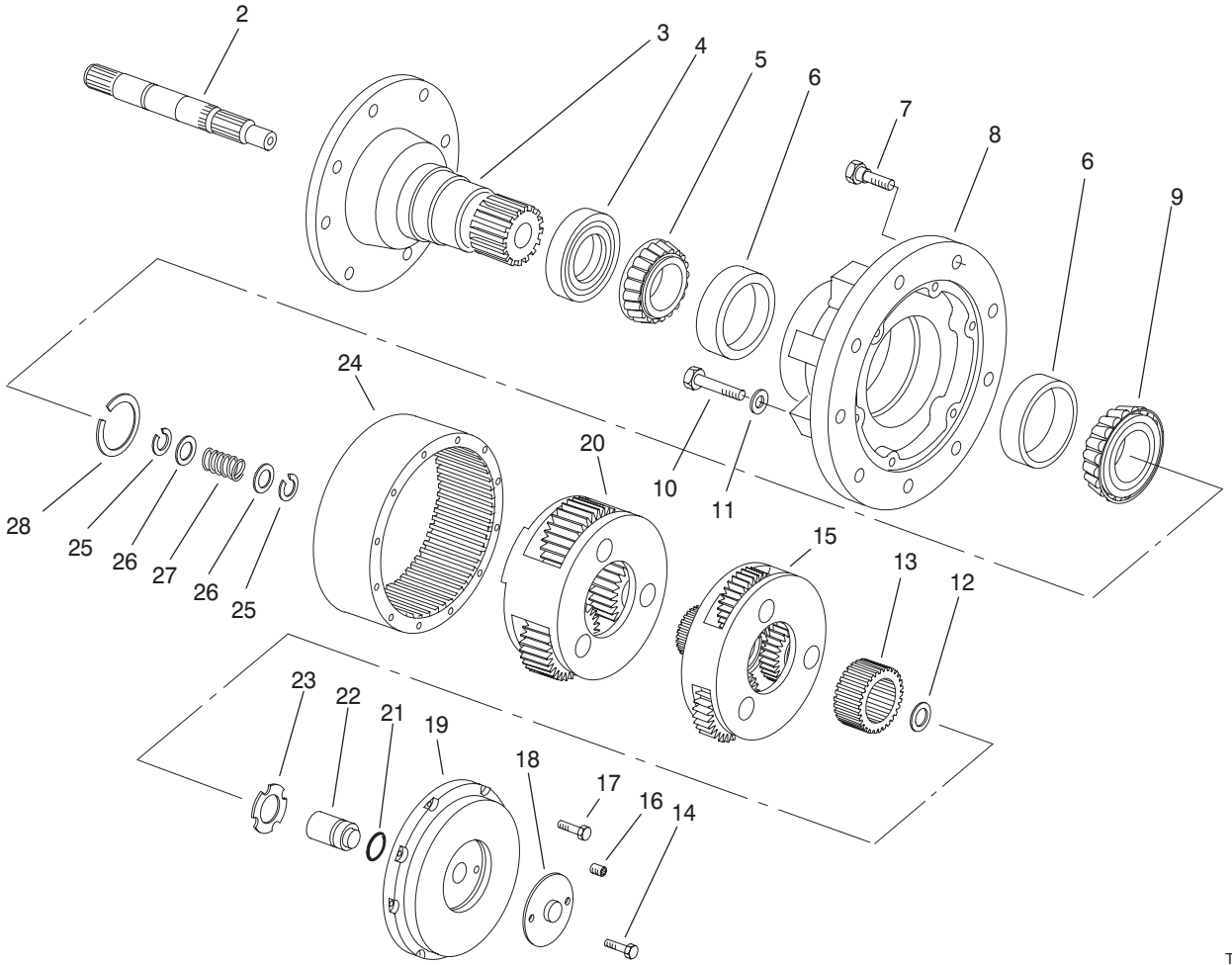

T–0140–2

Planetary Gear Assembly No. 69–1730

Ref. No.	Part No.	Qty.	Description
2	60–3810	1	Shaft–Input
3	69–1740	1	Spindle
4	60–3830	1	Seal–Oil
5	60–3840	1	Cone–Bearing
6	60–3850	2	Cup–Bearing
7	60–3860	9	Bolt–Wheel
8	60–3870	1	Hub
9	60–3880	1	Cone–Bearing
10	60–3890	6	Bolt–HH
11	60–3910	6	Washer–Flat
12	60–3980	1	Washer–Thrust
13	60–3970	1	Gear–Sun, Primary
14	60–4070	2	Bolt–HH
15	60–3960	1	Primary Carrier ASM
16	60–4040	1	Plug–Pipe
17	60–4030	8	Bolt–HH
18	60–4060	1	Cover–Disengage
19	60–4050	1	Cover–Large
20	60–4000	1	Secondary Carrier ASM
21	60–4020	1	O–Ring
22	60–4010	1	Plunger–Disengage
23	60–3990	1	Washer–Thrust
24	60–3900	1	Gear–Ring
25	60–3930	2	Ring–Retaining
26	60–3940	2	Washer

Ref. No.	Part No.	Qty.	Description
27	60–3950	1	Spring–Disengage
†28	62–6450	1	Kit–Ring, Retaining
*	62–6460	1	Sealant–RTV (Tube)

* Not Illustrated

Includes 7 different thickness retaining rings for service adjustment of bearings

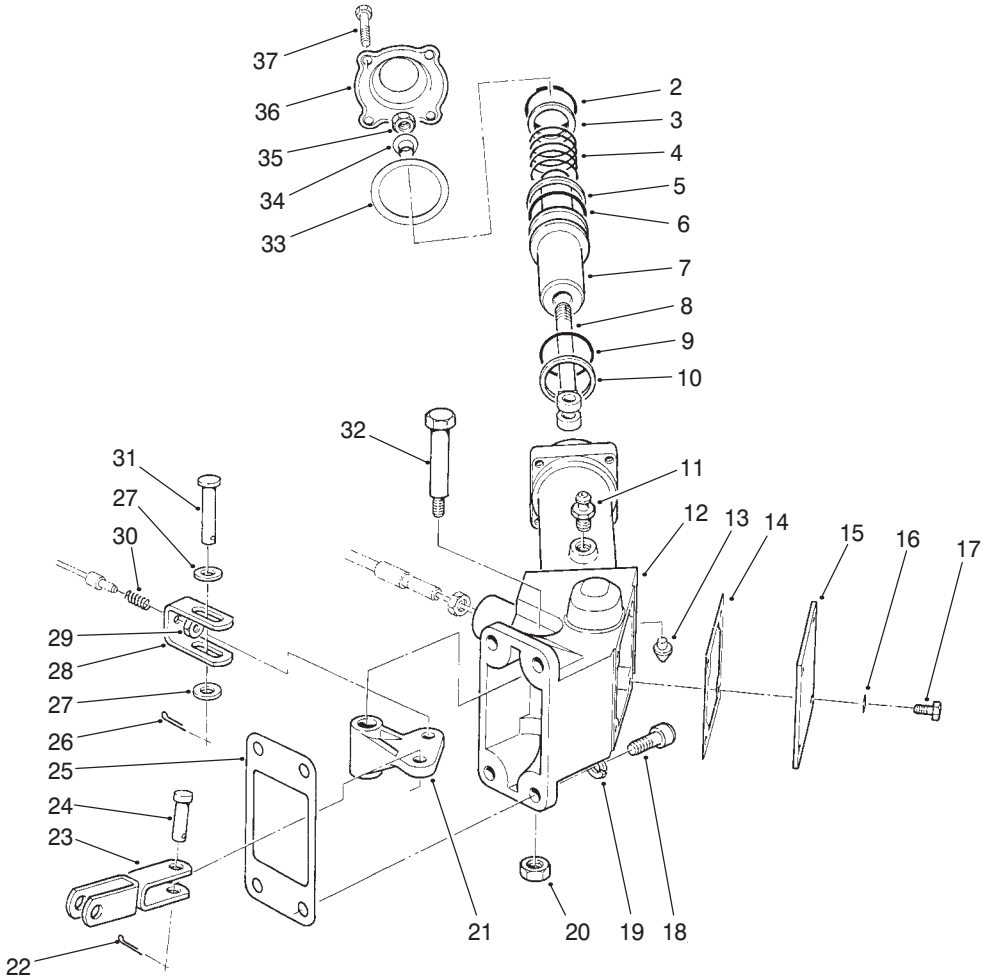

T–1277–1

Wheel Brake Assembly

Ref. No.	Part No.	Qty.	Description
2	32151–100	2	Ring–Retaining
3	69–8910	2	Washer
4	82–7850	2	Spring–Compression
5	354–104	2	Ring–Backup
6	237–175	2	O–Ring
7	82–7840	2	Piston–Brake
8	21–2070–03	2	Yoke–End
9	237–174	2	O–Ring
10	354–105	2	Ring–Backup
11	82–7830	2	Screw–Bleed, Brake
12	92–8003	1	Housing–Actuator, RH
*	92–8004	1	Housing–Actuator, LH
13	82–7820	2	Seat–Brake, Tube
14	71–3870	2	Gasket
15	71–3850–03	2	Cover–Housing
16	3253–3	8	Washer–Lock
17	321–2	8	Screw–HH
18	3274–7	8	Screw–HSH
19	3253–21	8	Washer–Lock
20	32128–25	2	Nut–HHF
21	71–3830–03	2	Bellcrank–Brake
22	3272–6	2	Pin–Cotter
23	71–3880	2	Clevis–Calbe, Brake
24	283–2	2	Pin–Clevis
25	71–3900	2	Gasket
26	3272–10	2	Pin–Cotter

Ref. No.	Part No.	Qty.	Description
27	3256–24	4	Washer–Flat
28	71–3860	2	Clevis
29	3296–3	2	Nut–Lock
30	69–0030	2	Spring–Compression
31	283–15	2	Pin–Clevis
32	12–8900	2	Bolt–Shoulder
33	93–7417	2	Gasket
34	71–3910	2	Collar
35	3296–59	2	Nut–Lock
36	93–7418	2	Cap–Actuator
37	321–6	8	Screw–HH

Not Illustrated

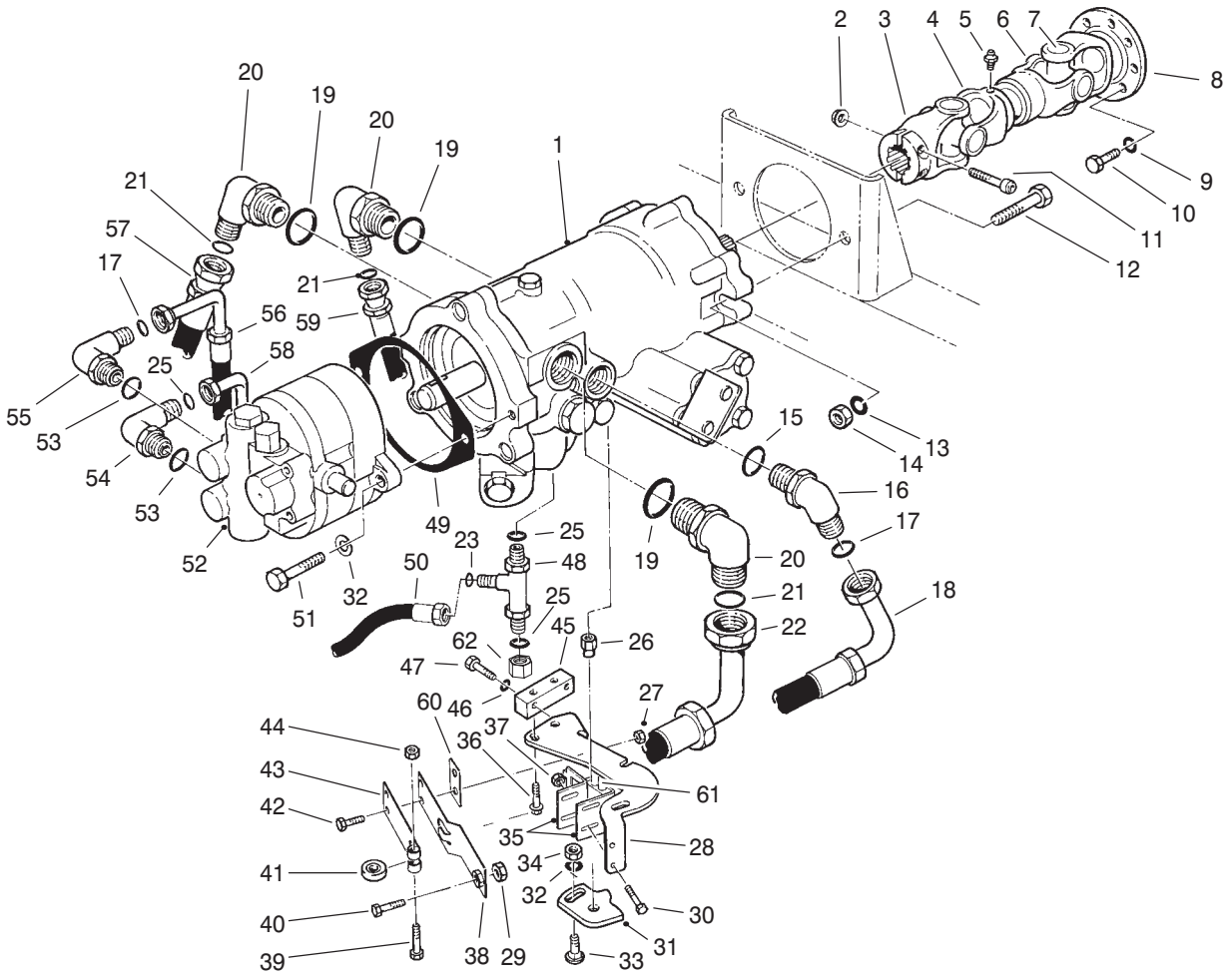

Variable Displacement Pump Installation

Ref. No.	Part No.	Qty.	Description
1	93–9322	1	Pump–Displacement, Variable
2	32128–21	2	Nut–HHF
3	93–7189	1	Yoke–End, Pump
4	98–0836	1	Tube–Yoke, Slip
5	302–2	1	Fitting–Grease
6	93–7188	1	Shaft–Yoke, Slip
7	92–4187	2	Kit–Joint, Universal
8	98–0835	1	Yoke–End, Engine
9	3253–6	6	Washer–Lock
10	99–6058	6	Screw–HH
11	3274–20	2	Screw–HSH
12	325–7	2	Screw–HH
13	3253–7	2	Washer–Lock
14	3217–9	2	Nut–Hex
15	237–81	1	O–Ring
16	340–131	1	Fitting–Elbow, Hyd. (Incl. Ref. #15 & 17)
17	237–30	2	O–Ring
18	69–5460	1	Hose–Hydraulic
19	237–146	3	O–Ring
20	340–15	3	Fitting–Elbow, Hyd. (Incl. Ref. #19 & 21)
21	237–58	3	O–Ring
22	69–5650	1	Hose–Hydraulic
23	237–42	1	O–Ring

Ref. No.	Part No.	Qty.	Description
25	237–22	3	O–Ring
26	69–9020	1	Nut–Special
27	32152–4	2	Nut–Lock
28	69–9480–03	1	Bracket–Device, Neutral
29	3219–2	1	Nut–Hex
30	32144–1	2	Screw–HH
31	69–9040–03	1	Cam–Device, Neutral
32	3253–21	3	Washer–Lock
33	3231–30	1	Bolt–CARR
34	3217–7	1	Nut–Hex
35	93–9337	1	Bracket–Switch
36	3234–13	4	Screw–HFH
37	32127–11	2	Nut–Flexlok
38	29–6170	1	Leaf Spring ASM
39	322–17	1	Screw–HH
40	3210–7	1	Screw–HH
41	251–307	1	Bearing–Detent, Neutral
42	321–4	2	Screw–HH
43	29–6150	1	Spring–Leaf
44	32153–3	1	Nut–Lock
45	69–9050	1	Bar–Device, Neutral
46	3253–3	2	Washer–Lock
47	321–10	2	Screw–HH

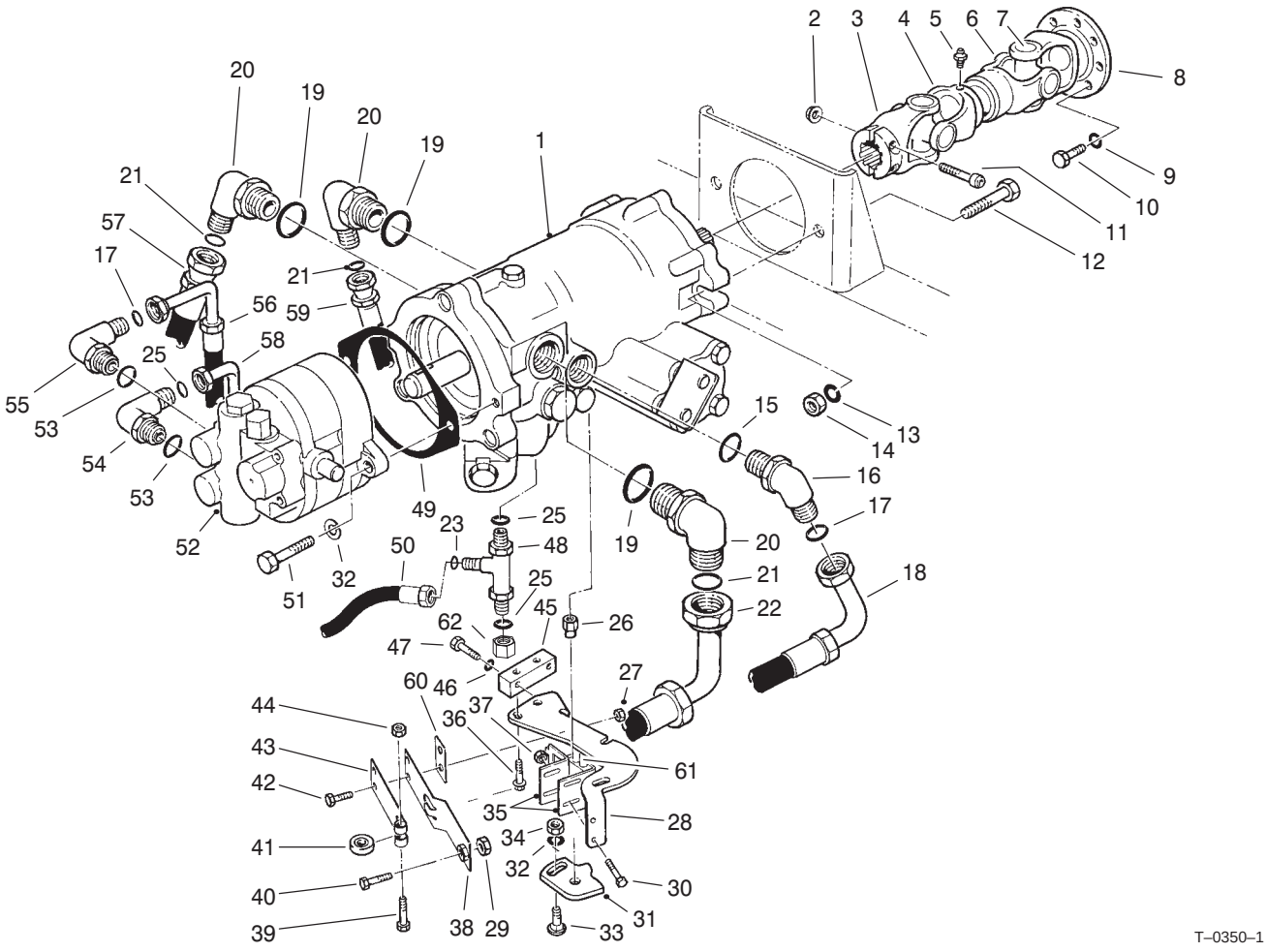

T–0350–1

Variable Displacement Pump Installation (Continued)

Ref. No.	Part No.	Qty.	Description
48	340–86	1	Fitting–Tee, Hydraulic (Incl. Ref. #23 & 25)
49	41–8760	1	Gasket–Pump
50	100–4150	1	Hose–Hydraulic
51	323–7	2	Screw–HH
52	69–2220	1	Pump/Valve
53	327–80	2	O–Ring
54	340–130	1	Fitting–Elbow, Hydraulic (Incl. Ref. #25 & 53)
55	340–105	1	Fitting–Elbow, Hydraulic (Incl. Ref. #17 & 53)
56	69–5450	1	Hose–Hydraulic
57	100–8014	1	Hose–Hydraulic
58	69–5440	1	Hose–Hydraulic
59	100–8015	1	Hose–Hydraulic
60	51–3150	1	Shim–Spring
61	93–7037	1	Switch
*	98–0819	1	Pump Drive Shaft ASM (Incl. Ref. #3–8)
62	340–117	1	Fitting–Cap

Ref. No.	Part No.	Qty.	Description

* Not Illustrated

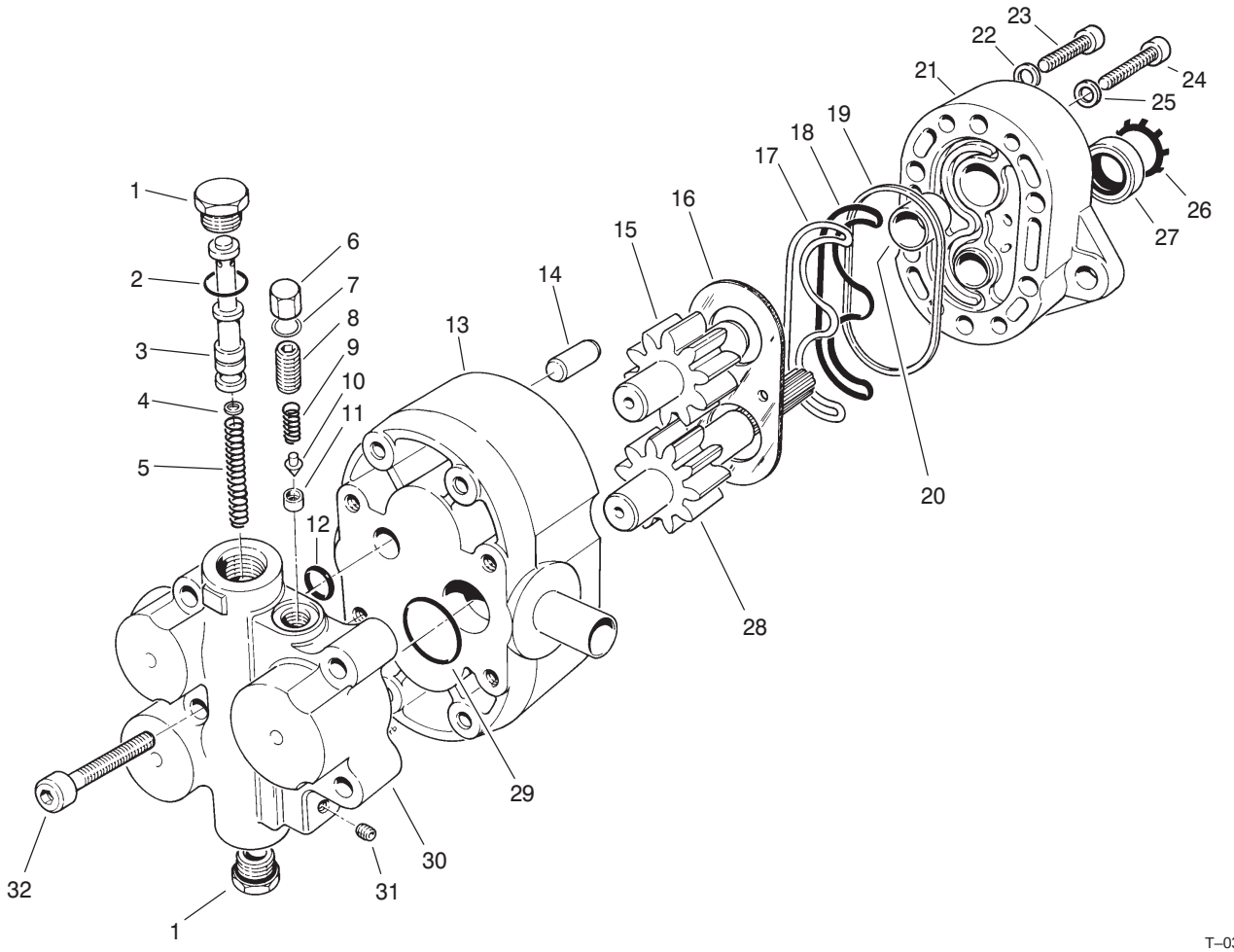

T–0374–1

Gear Pump and Flow Divider No. 69–2220

Ref. No.	Part No.	Qty.	Description
1	69–2410	2	Plug (Incl. Ref. #2)
2	69–2420	2	O–Ring
3	69–2450	1	Piston
4	69–2440	1	Orifice
5	69–2430	1	Spring–Compression
6	69–2460	1	Cap
7	69–2470	1	Gasket–Cap
8	69–2480	1	Screw–Set
9	69–2490	1	Spring–Compression
10	69–2500	1	Poppet
11	69–2510	1	Seat
12	69–2530	1	O–Ring
13	69–2540	1	Cover ASM (Incl. Ref. #20)
14	69–2340	2	Pin–Dowel
15	69–2280	1	Shaft/Gear–Idler
16	69–2320	1	Plate–Wear
17	69–2260	1	Seal–Load
18	69–2270	1	Seal–Pre–Load
19	69–2350	1	Ring–Sealing
20	69–2250	4	Bearing–Sleeve
21	69–2330	1	Body ASM (Incl. Ref. #20)
22	69–2370	4	Washer
23	69–2360	4	Screw
24	69–2380	4	Screw
25	69–2390	4	Washer
26	69–2300	1	Ring–Retaining
27	69–2310	1	Seal–Shaft
28	69–2290	1	Shaft/Gear–Drive
29	69–2400	1	O–Ring
30	69–2230	1	Flow Divider ASM (Incl. Ref. #1–11 & 31)
31	69–2520	1	Plug–Pipe
32	69–2240	4	Screw
*	69–2550	1	Kit–Repair, Pump (Incl. Ref. #16–19, 22 & 25–27)
*	69–2560	1	Kit–Repair, Pump & Divider (Incl. Ref. #2, 7, 9–10, 12,16–19, 22, 25–27 & 29)

* Not Illustrated

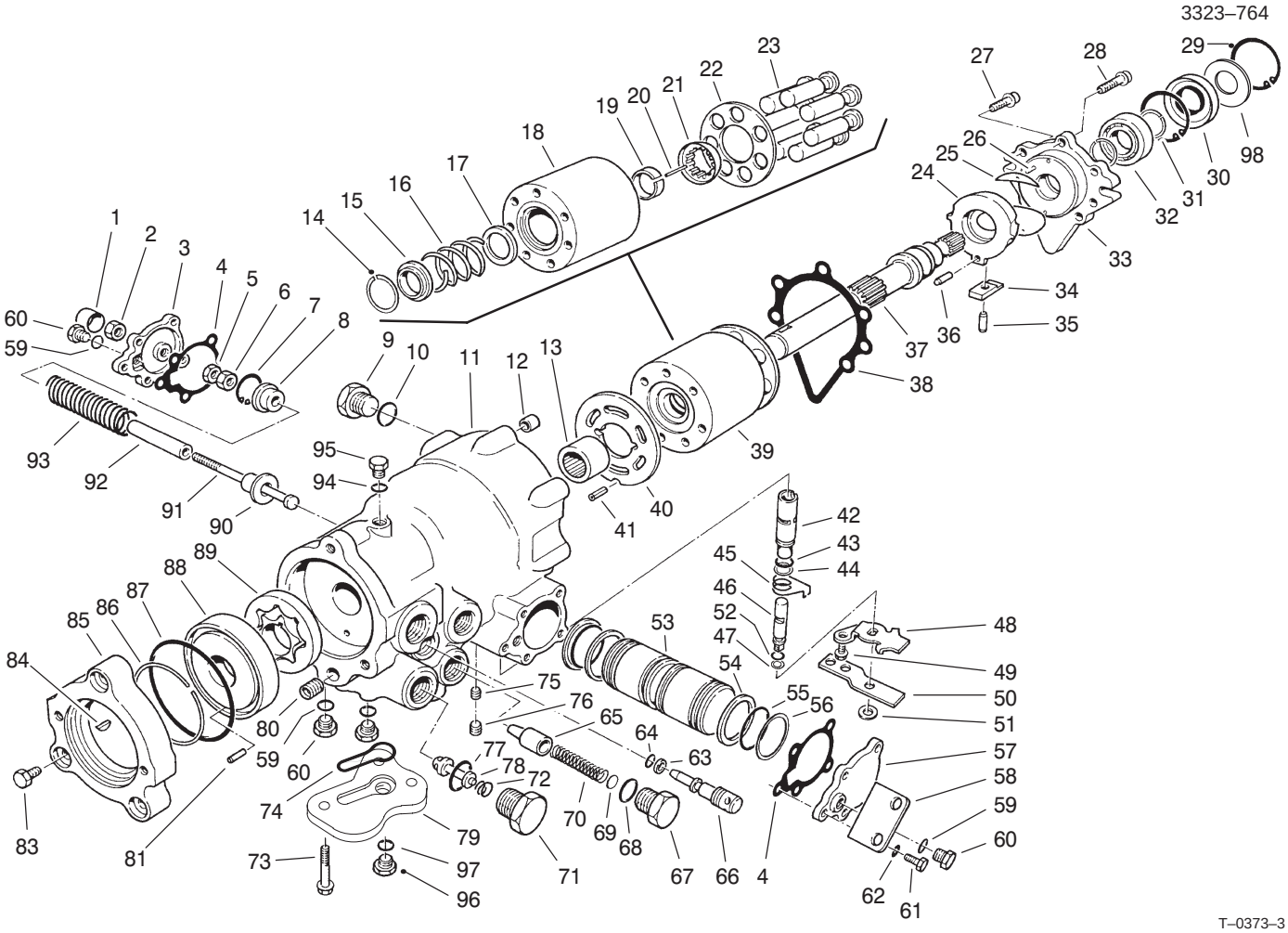

Variable Displacement Pump No. 93–9322

Ref. No.	Part No.	Qty.	Description
1	69–3620	1	Cover–Adjustment, Servo
2	69–3630	1	Nut–Special
3	69–3640	1	Cover–Servo
4	69–3710	2	Gasket–Servo
5	69–3610	1	Nut–Jam
6	69–3600	1	Nut–Hex
7	69–3590	1	Ring–Retaining
8	69–3580	1	Guide–Spring
9	69–3130	1	Plug (Incl. Ref. #10)
†10		1	O–Ring
†11		1	Housing–Pump
12	69–3230	1	Pin–Spring
13	69–3370	1	Bearing–Needle
†14		1	Ring–Retaining
†15		1	Washer
†16		1	Spring–Compression
†17		1	Washer
†18		1	Block–Cylinder
†19		1	Retainer
†20		3	Pin–Hold Down, Slipper
†21		1	Guide–Retainer
†22		1	Guide–Slipper
†23		7	Piston ASM
24	69–3250	1	Swashplate–Variable

Ref. No.	Part No.	Qty.	Description
25	69–3240	2	Bearing–Journal
26	94–2878	2	Pin
27	76–4590	6	Screw
28	69–3220	1	Screw
29	69–3200	2	Ring–Retaining
30	69–3190	1	Seal–Lip
31	69–3170	2	Ring–Retaining
32	69–3210	1	Bearing–Ball
33	76–4610	1	Cover
34	69–3500	1	Sleeve–Bearing
35	69–3510	1	Pin
36	69–3470	1	Pin
37	69–3180	1	Pump–Shaft
38	76–4600	1	Gasket–Cover
39	69–3910	1	Cylinder Block ASM (Incl. Ref #14–23)
40	93–9320	1	Plate–Valve, LH
41	69–3450	1	Pin
42	69–3820	1	Sleeve–Valve, Control
43	28–3590	1	O–Ring
44	28–3580	1	Ring–Up, Back
45	69–3880	1	Spring–Return, Neutral
46	69–3830	1	Spool–Valve, Rotary
47	25–2630	1	Ring–Back–Up
48	69–3890	1	Bracket–Return, Neutral

† Not Serviceable Separately

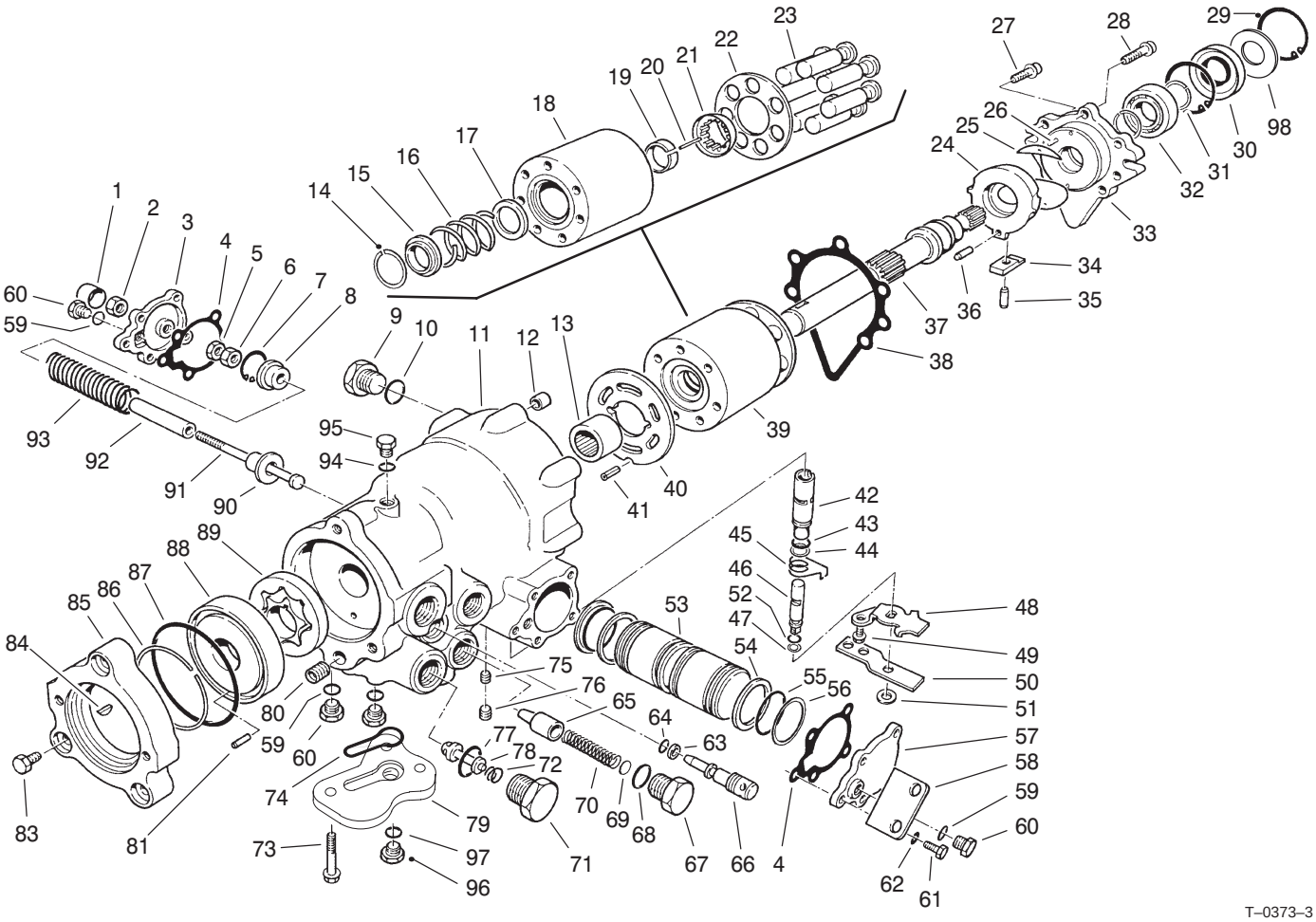

Variable Displacement Pump No. 93–9322 (Continued)

Ref. No.	Part No.	Qty.	Description
49	69–3860	1	Screw–HFH
50	69–3870	1	Handle–Valve, Control
51	69–3900	1	Washer
52	69–3840	1	O–Ring
53	69–3650	1	Piston–Servo
54	69–3690	2	Bearing
55	69–3560	2	O–Ring
56	69–3570	2	Ring–Piston
57	69–3720	1	Cover–Servo
58	69–3140	1	Bracket–Lifting
†59		4	O–Ring
60	69–3080	4	Plug (Incl. Ref. #59)
61	69–3150	10	Screw–HH
62	69–3070	10	Washer–Lock
63	25–2630	1	Ring–Up, Back
64	237–22	1	O–Ring
65	69–3800	1	Valve
66	69–3810	1	Valve–By–Pass
67	69–3780	1	Plug (Incl, Ref. #68)
68	237–80	1	O–Ring
69	69–3770	1	Shim
70	69–3790	1	Spring–Compression
71	69–3760	2	Plug–Special (Incl. Ref. #77)
72	69–3740	2	Spring–Compression
73	94–9413	3	Screw

Ref. No.	Part No.	Qty.	Description
74	94–9412	1	Seal–Adapter
75	93–9321	1	Plug–Orifice
76	285–17	2	Plug–Pipe
77	69–3750	2	O–Ring
78	69–3730	2	Valve–Relief (Incl. Ref.#71, 72 & 77)
79	94–9414	1	Adapter–Suction
80	69–3460	1	Plug–Expansion
81	69–3550	1	Pin
83	69–3400	3	Screw–HH
84	69–3430	1	Key–Woodruff
85	69–3410	1	Adapter–A Flange
86	69–3420	1	Ring–Load, Temper
87	69–3440	1	O–Ring
88	69–3540	1	Cover–Gerotor
89	69–3390	1	Gerotor ASM
90	69–3700	1	Guide–Spring
91	69–3660	1	Screw–Special
92	69–3680	1	Stop–Servo
93	69–3670	1	Spring–Compression
†94		1	O–Ring
95	69–3120	1	Plug (Incl, Ref. #94)
96	94–9415	1	Plug (Incl. Ref. #97)
†97		1	O–Ring
98	95–4400	1	Washer–Backup

† Not Serviceable Separately

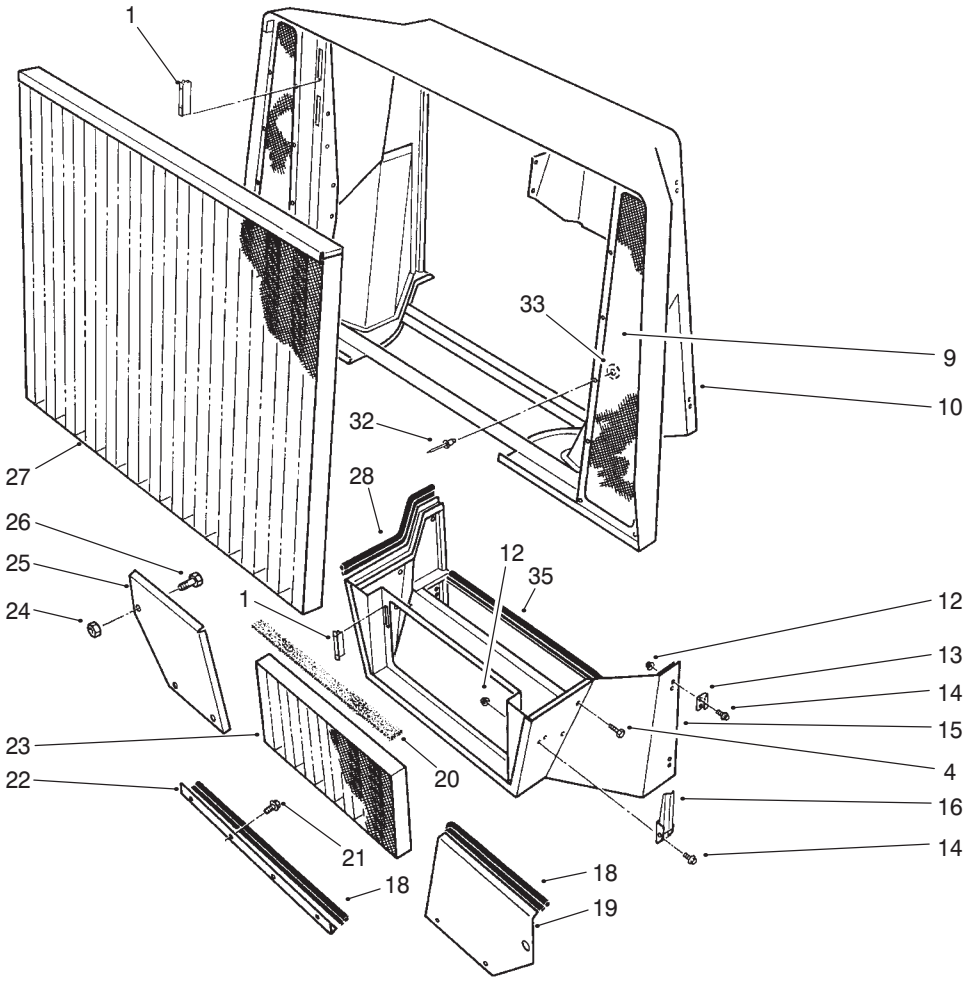

T–2813–1

Cowl Assembly

Ref. No.	Part No.	Qty.	Description
1	58–4250	6	Magnet
9	69–9650–03	2	Screen–Cowl
10	98–2365–01	1	Cowl–Radiator
12	3296–2	20	Nut–Lock
13	69–3030	8	Strike–Latch
14	3290–321	20	Screw–HWH
15	69–8690–03	1	Support–Grille
16	69–3020	2	Handle–Latch
18	69–9721	3	Strip–Sealing
19	75–9460–03	1	Bracket–Sealing, LH
20	69–0040	1	Foam–Grille, Lower
21	32144–11	8	Screw–HFH
22	75–9480–03	1	Bracket–Sealing, Bottom
23	69–7150–03	1	Grille–Lower
24	32153–6	2	Nut Lock
25	75–9470–03	1	Bracket–Sealing, RH
26	328–11	2	Screw–HH
27	69–7120–03	1	Grille–Upper
28	69–9720	2	Strip–Sealing
32	3269–15	22	Rivet–Pop
33	3269–6	22	Washer–Backup
35	69–9722	1	Trim–Sealing

Ref. No.	Part No.	Qty.	Description

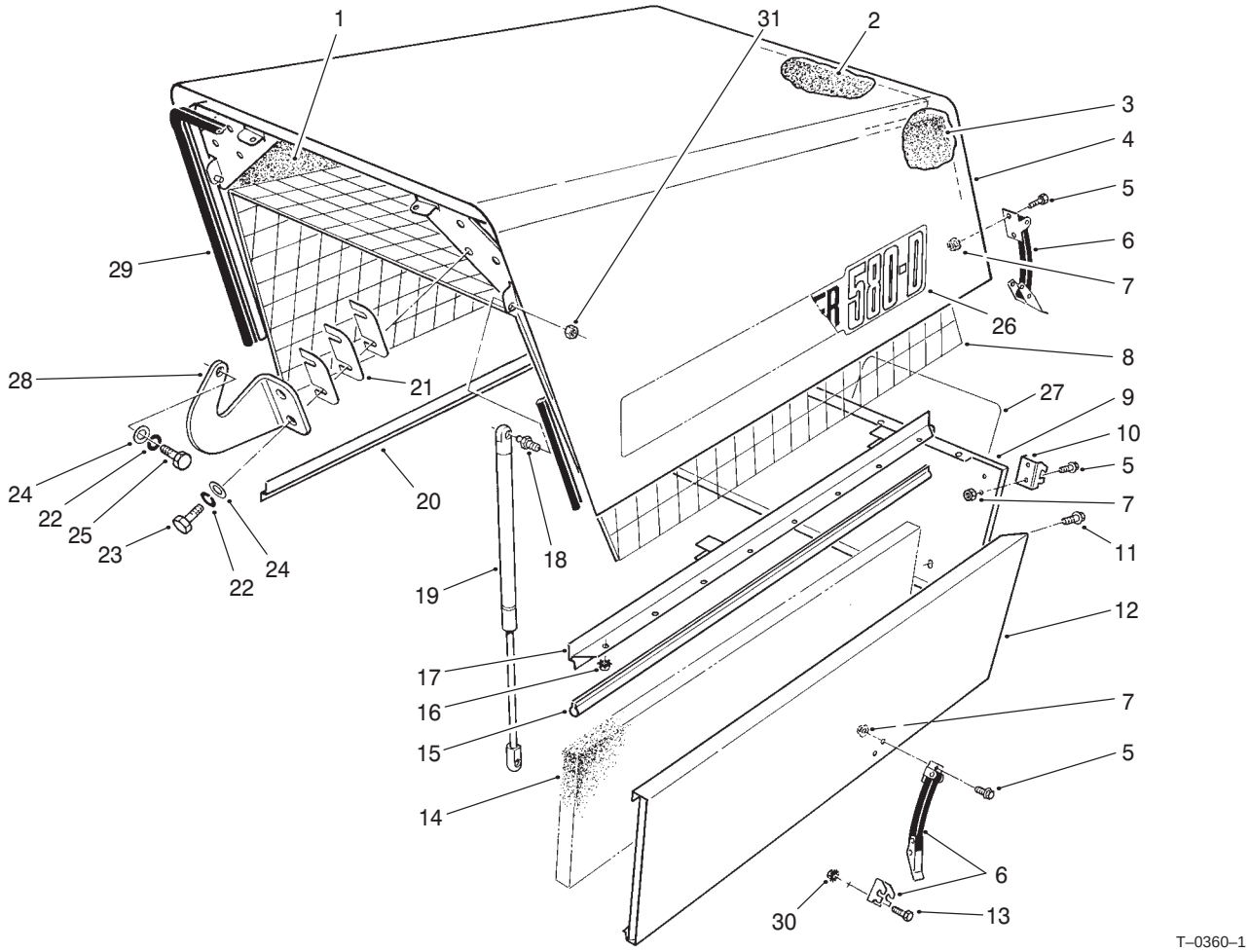

Hood Assembly

Ref. No.	Part No.	Qty.	Description
1	71–0270	1	Foam–Hood, RH Side
2	71–0250	1	Foam–Hood, Top
3	71–0260	1	Foam–Hood, LH Side
4	92–1772	1	Hood ASM (Incl. Ref.#1–4, 8, 15–17, 20, 26 & 29)
5	3290–321	12	Screw–HH
6	69–3010	4	Strap–Down, Hold (Incl. Ref. #10)
7	3296–2	12	Nut–Lock
8	71–0060–03	1	Support–Foam
9	69–9520–03	1	Panel–Rear
†10		4	Latch–Hold–Down
11	3234–14	6	Screw–HH
12	69–1390–03	1	Panel–Side, LH
*	69–1380–03	1	Panel–Side, RH
13	3290–134	4	Screw–HH
14	71–0400	2	Foam–Panel, Side
15	69–9723	2	Seal–Bottom, Hood
16	32149–2	16	Nut–Keps
17	69–8230–03	1	Bracket–Trim, LH
18	88–6770	2	Stud–Ball
19	88–6760	2	Spring–Gas
20	69–8250–03	1	Bracket–Trim, RH
21	69–8500	6	Shim–Bracket, Hinge
22	3253–21	6	Washer–Lock

Ref. No.	Part No.	Qty.	Description
23	323–6	4	Screw–HH
24	3256–24	6	Washer–Flat
25	323–4	2	Screw–HH
26	69–0950	2	Decal–580D
27	66–6140	1	Decal–TORO
28	98–3026–03	2	Bracket–Hinge
29	69–9724	1	Seal–Hood, Front
30	32149–7	4	Nut
31	32152–1	2	Nut

* Not Illustrated
† Not Serbiceable Separately

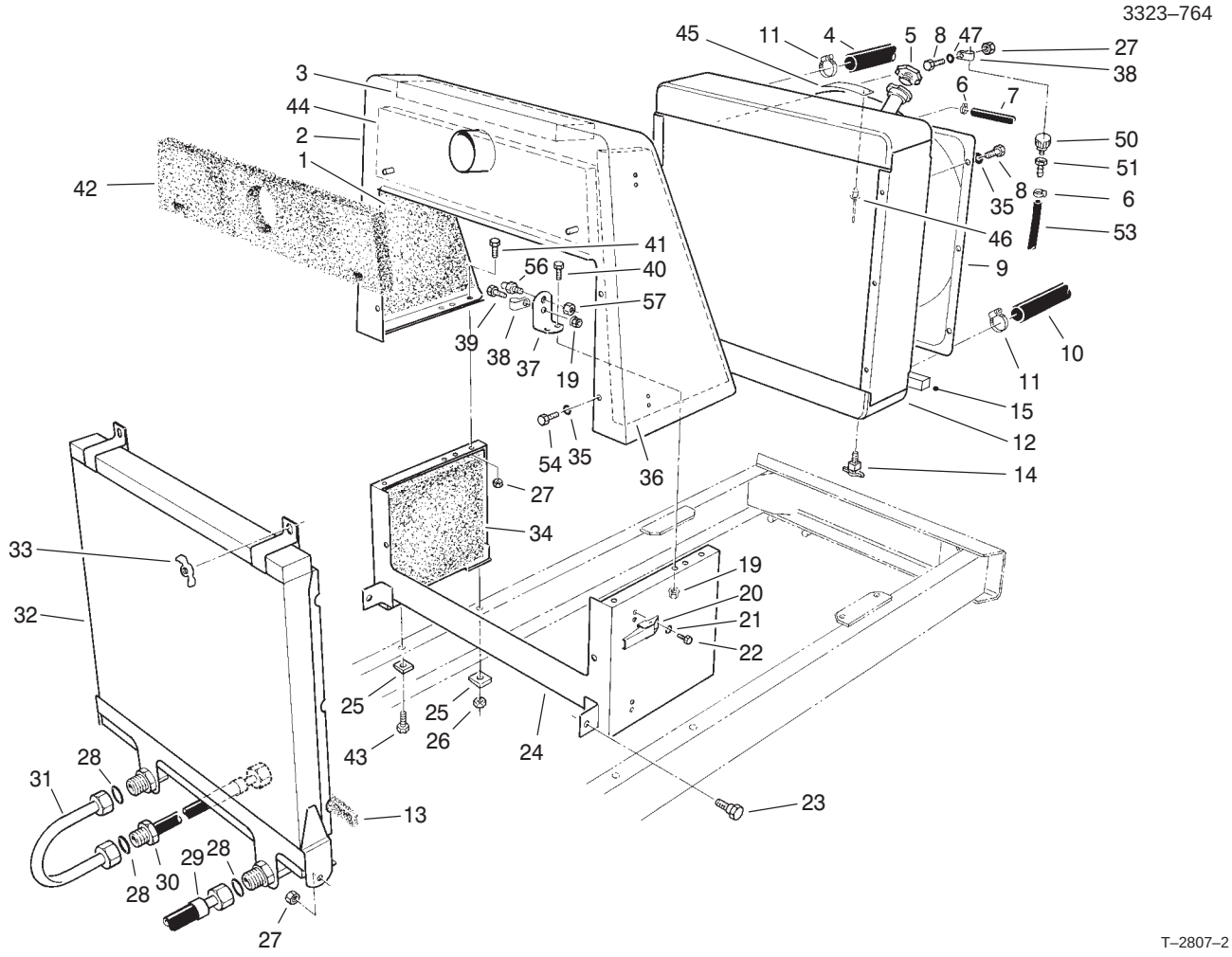

Radiator and Oil Cooler Assembly

Ref. No.	Part No.	Qty.	Description
1	71–0350	1	Foam–Radiator Support, RH
2	69–8590–03	1	Support–Radiator, Upper
3	71–0360	1	Foam–Radiator Support, Top
4	98–7320	1	Hose–Radiator, Upper
5	66–3241	1	Cap–Radiator
6	2412–108	2	Clamp–Hose
7	23–2140	1	Hose–Vent, Radiator
8	323–34	7	Screw–HH
9	98–7318	1	Shroud–Fan (Incl. Ref. #45 & 46)
10	95–6456	1	Hose–Radiator, Lower
11	2412–92	4	Clamp–Hose
12	98–7311	1	Radiator
13	71–0210	1	Foam–Seal, Radiator
14	304–46	1	Valve–Drain
15	98–7348	2	Foam–Seal
19	32128–20	5	Nut–HHF
20	69–3020	8	Latch
21	3253–2	16	Washer–Lock
22	3290–321	16	Screw–HH
23	46–3380	2	Bolt–Shoulder
24	69–7100–03	1	Support–Radiator, Lower

Ref. No.	Part No.	Qty.	Description
25	3290–216	4	Washer–Bevel
26	32153–5	4	Nut–Lock
27	32152–2	7	Nut–Lock
28	340–65	3	O–Ring
29	69–5620	1	Hose–Hydraulic
30	69–8450	1	Hose–Hydraulic (Incl. Ref. #28)
31	69–5900	1	Tube–Hydraulic
32	69–1670	1	Cooler–Oil (Incl. Ref. #28)
33	32103–3	2	Nut–Wing
34	71–0370	2	Foam–Radiator Support, Lower
35	3253–21	12	Washer–Lock
36	71–0340	1	Foam–Radiator Support, LH
37	88–9450	2	Bracket–Cylinder, Hood
38	2412–41	2	Clamp–R
39	322–5	1	Screw–HH
40	322–6	4	Screw–HH
41	323–7	4	Screw–HH
42	71–0380	1	Foam–Radiator Support, Front
43	325–6	4	Screw–HH

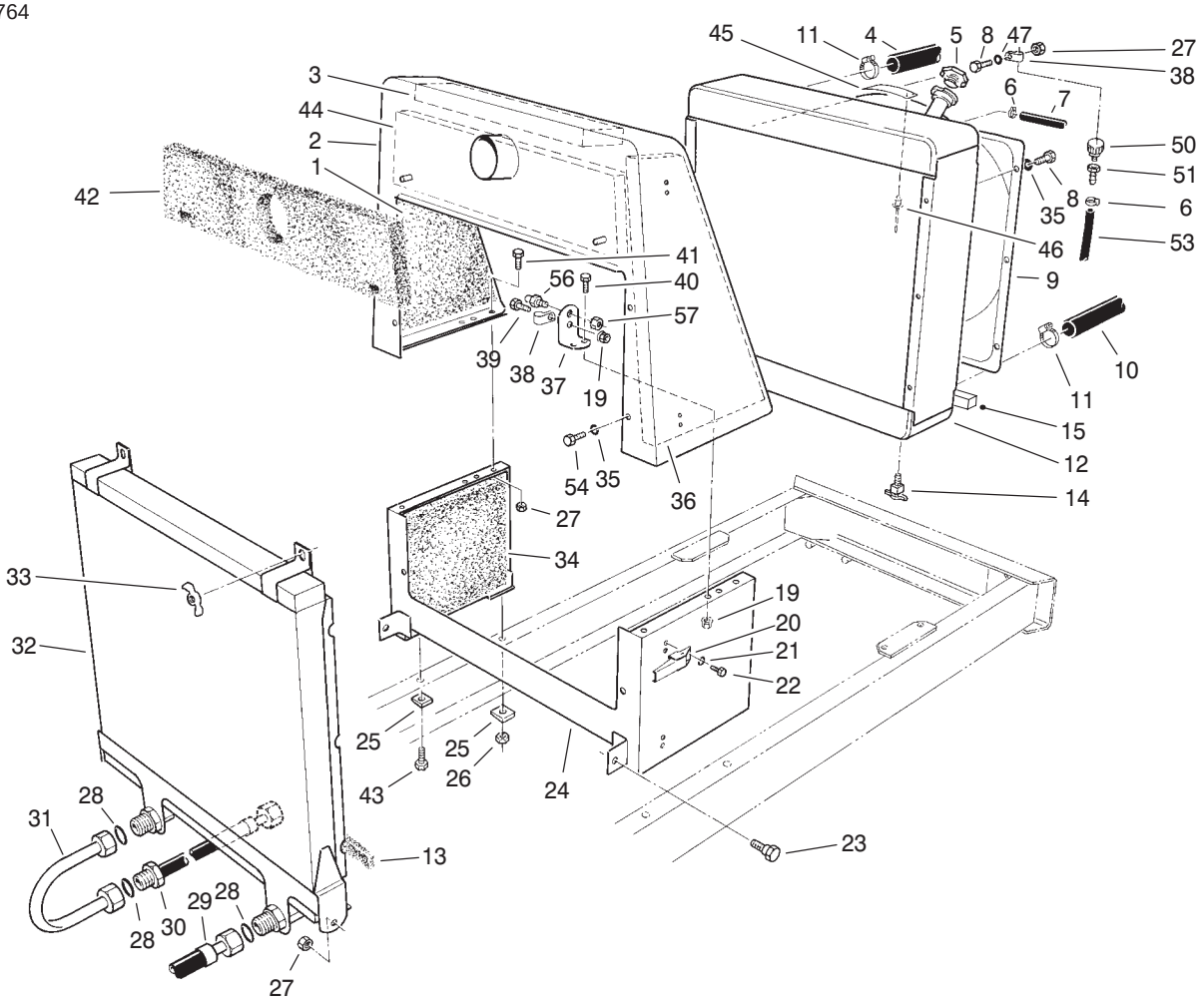

T–2807–2

Radiator and Oil Cooler Assembly (Continued)

Ref. No.	Part No.	Qty.	Description
44	71–0390	1	Foam–Radiator Support, Rear
45	76–8750	2	Plate–Caution
46	3290–274	4	Rivet–Pop
47	3256–56	2	Washer–Flat
50	68–6150	1	Breather
51	354–95	1	Fitting
53	71–2680	1	Hose–Vent
54	32144–69	6	Screw–HWH
56	88–6770	2	Stud–Ball
57	32152–1	2	Nut–Lock

Ref. No.	Part No.	Qty.	Description

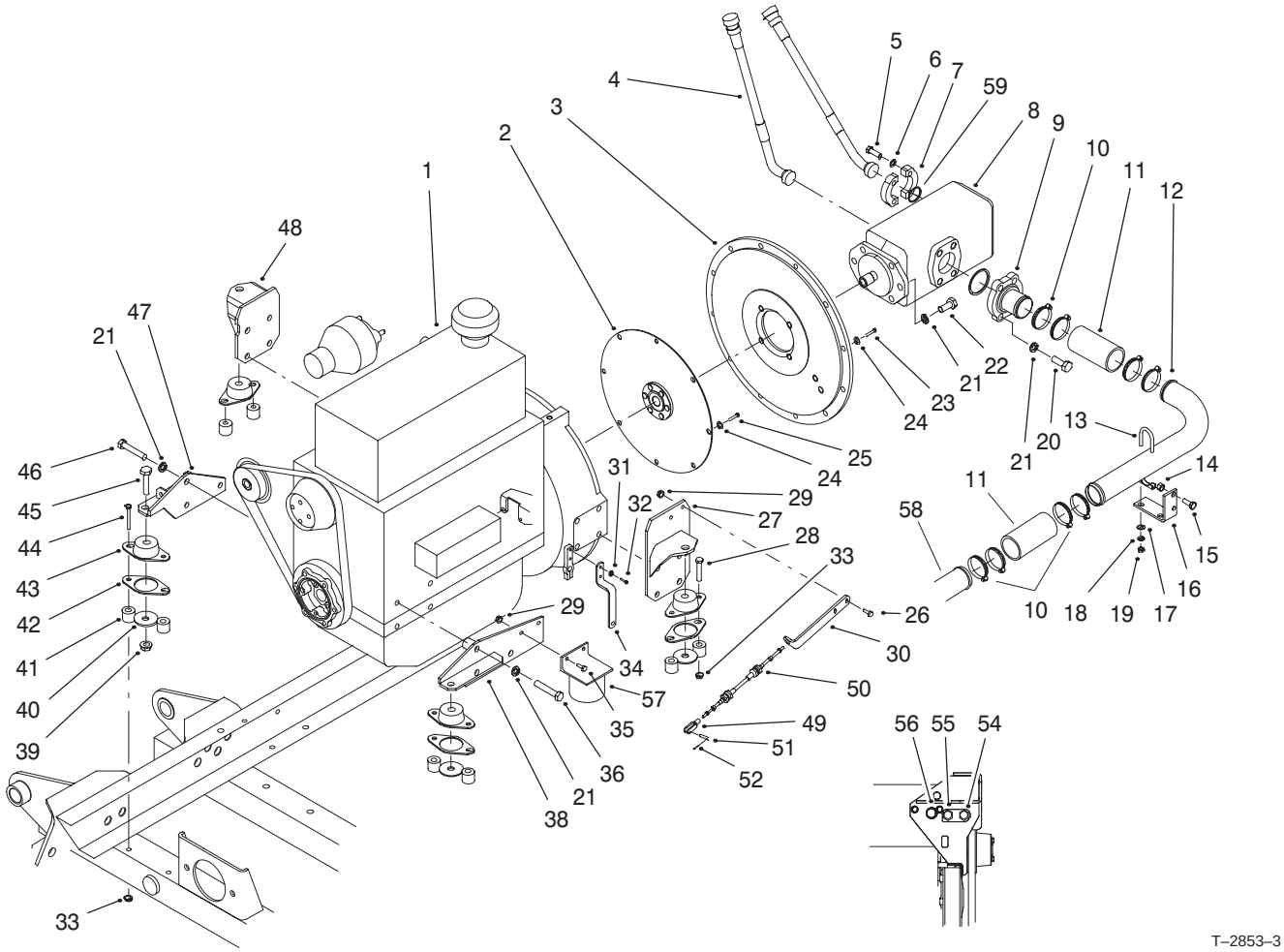

T–2853–3

Engine Installation Assembly

Ref. No.	Part No.	Qty.	Description
1	95–6499	1	Engine ASM
2	99–8879	1	Coupler ASM
3	95–6481–03	1	Plate–Adapter, Pump
4	98–0655	2	Hose ASM
5	323–7	8	Screw–HH
6	3253–21	8	Washer–Lock
7	353–992	4	Flange–Split
8	69–2050–03	1	Pump–Gear, Double
9	354–42	2	Flange–Split, Half
10	2412–42	12	Clamp–Hose
11	69–5640	3	Hose–Suction
12	99–4969	1	Tube–Suction
13	20–4840	2	Clamp–Muffler
14	32152–2	4	Nut–Lock
15	323–6	4	Screw–HH
16	69–9220–03	2	Bracket–Tube, Suction
17	3256–23	4	Washer–Flat
18	3253–4	4	Washer–Lock
19	3217–6	4	Nut–Hex
20	325–6	8	Screw–HH
21	3253–7	12	Washer–Lock
22	3213–2	4	Screw–HH
23	33115–030	18	Screw–HH
24	3253–6	20	Washer–Lock
25	33115–025	8	Screw–HH
26	321–6	2	Screw–HH

Ref. No.	Part No.	Qty.	Description
27	95–6465–03	1	LH Rear Mount ASM
28	323–10	8	Screw–HH
29	32149–2	10	Nut–Lock
30	69–8490–03	1	Bracket–Cable, Throttle
31	3253–3	2	Washer–Lock
32	33113–016	2	Screw–HH
33	32128–21	8	Nut–HFH
34	95–6489–03	1	Bracket–Throttle
35	321–4	2	Screw–HH
36	33116–050	3	Screw–HH
38	95–6470–03	1	LH Mount ASM
39	32128–23	4	Nut–HHF
40	98–3023	4	Washer
41	95–6486	8	Spacer–Mount
42	98–0830	4	Retainer–Mount
43	98–3024	4	Mount–Engine
44	323–38	4	Screw–HH
45	325–9	4	Screw–HH
46	33116–030	3	Screw–HH
47	95–6467–01	1	RH Mount ASM
48	95–6465–03	1	Rear Mount ASM
49	282–28	1	Clevis–Adjustable
50	77–2990	1	Cable–Throttle
51	69–0090	1	Pin–Throttle

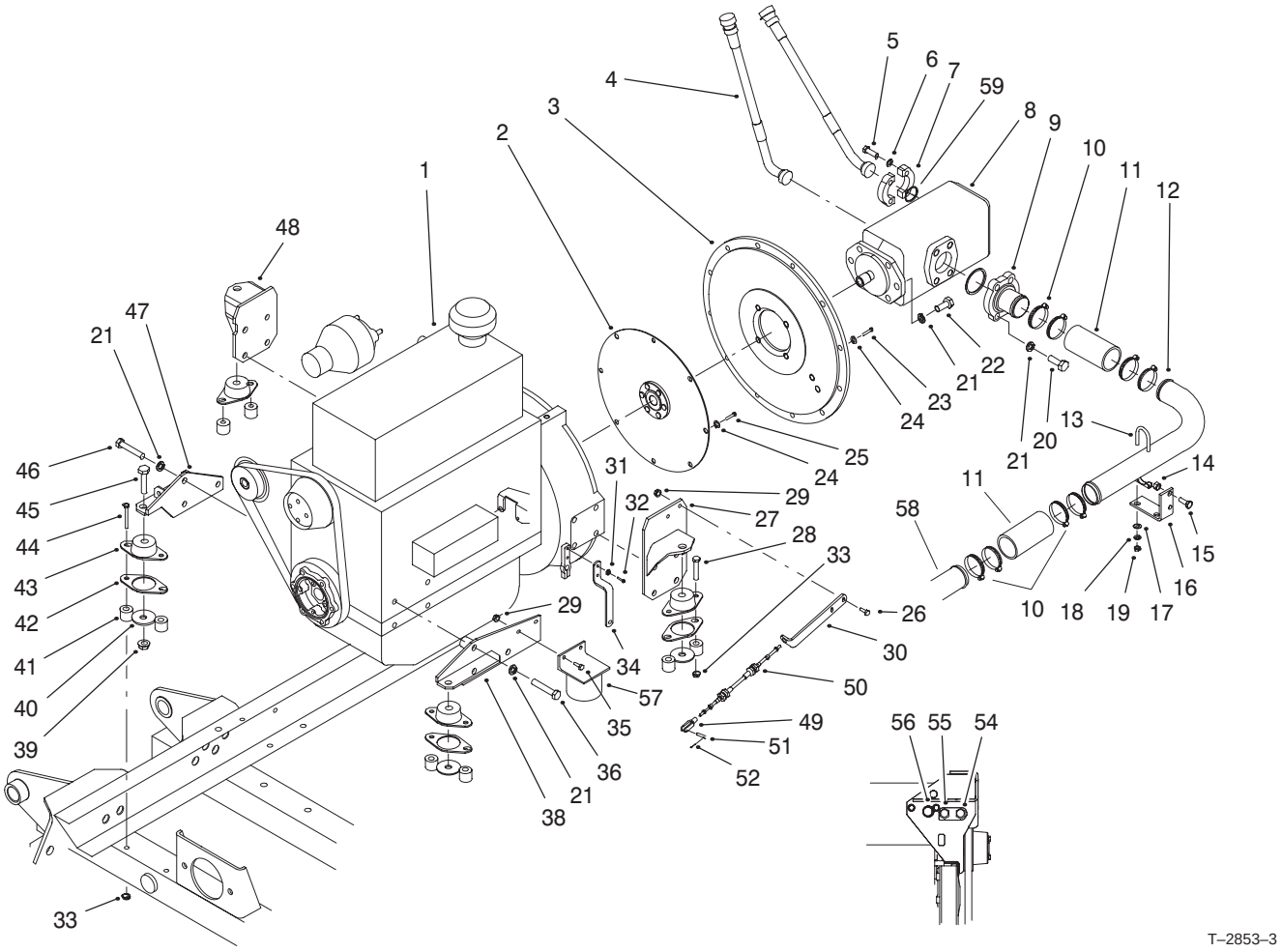

Engine Installation Assembly (Continued)

Ref. No.	Part No.	Qty.	Description
52	3272–1	1	Pin–Cotter
54	93–3526	1	Switch
55	67–4510	1	Unit–Gauge
56	51–5070	1	Switch
57	69–1750	1	Fuel Filter ASM
58	99–4968	1	Tube–Suction
59	340–135	2	O–ring

Ref. No.	Part No.	Qty.	Description

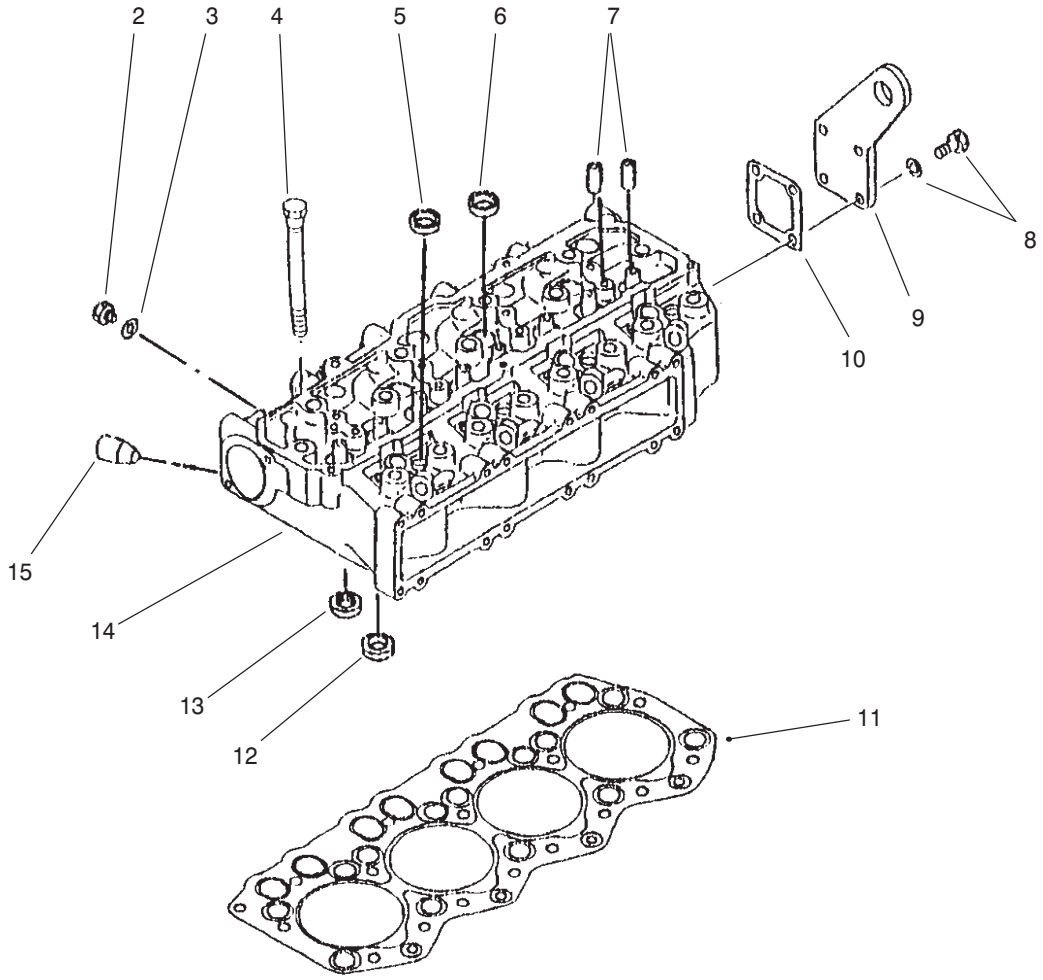

T–2949

Cylinder Head Assembly

Ref. No.	Part No.	Qty.	Description
2	99–1812	1	Plug–Drain
3	99–1813	1	Gasket
4	99–1806	17	Bolt–Head, Cylinder
5	99–1801	12	Cap–Sealing, 20mm
6	99–1802	7	Cap–Sealing, 25mm
7	99–1803	8	Guide–Valve
8	99–1811	4	Bolt w/Washer
9	99–1808	1	Eye–Lifting, Rear
10	99–1809	1	Gasket–Head, Rear
11	99–1807	1	Gasket–Head, Cylinder
12	99–1804	4	Seat–Valve, Inlet
13	99–1805	4	Seat–Valve, Exhaust
14		1	Head–Cylinder
15		1	Plug
*	99–1800	1	Cylinder Head ASM (Incl. Ref. #2–3, 5–7 & 12–14)

Ref. No.	Part No.	Qty.	Description

* Not Illustrated

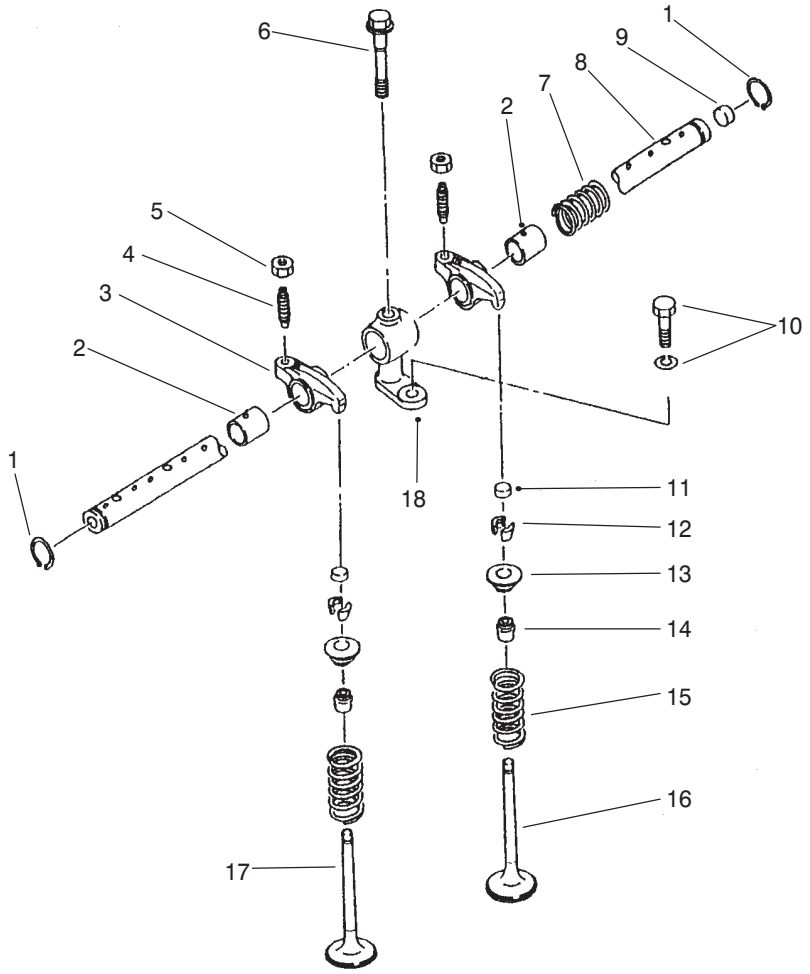

T–2950

Valve Mechanism Assembly

Ref. No.	Part No.	Qty.	Description
1	99–1822	2	Ring–Snap
2		8	Bushing–Rocker
3		8	Rocker
4	93–3401	8	Screw–Rocker
5	51–5210	8	Nut–Jam
6	99–1824	4	Bolt–Bracket, Rocker
7	99–1820	3	Spring–Rocker
8		1	Shaft–Rocker
9		2	Plug–Shaft, Rocker
10	99–1825	4	Bolt w/Washer
11	51–5280	8	Cap
12	60–7420	16	Cotter–Valve
13	99–1816	8	Retainer–Upper
14	99–1817	8	Seal–Stem, Valve
15	51–5320	8	Spring–Valve
16	99–1815	4	Valve–Exhaust
17	99–1814	4	Valve–Inlet
18	99–1823	4	Bracket–Shaft, Rocker
*	99–1818	1	Rocker & Shaft ASM (Incl. Ref. #1–9)
*	99–1819	8	Rocker ASM (Incl. Ref. #2–5)
*	99–1821	1	Rocker Shaft ASM (Incl. Ref. #8–9)

Ref. No.	Part No.	Qty.	Description

* Not Illustrated

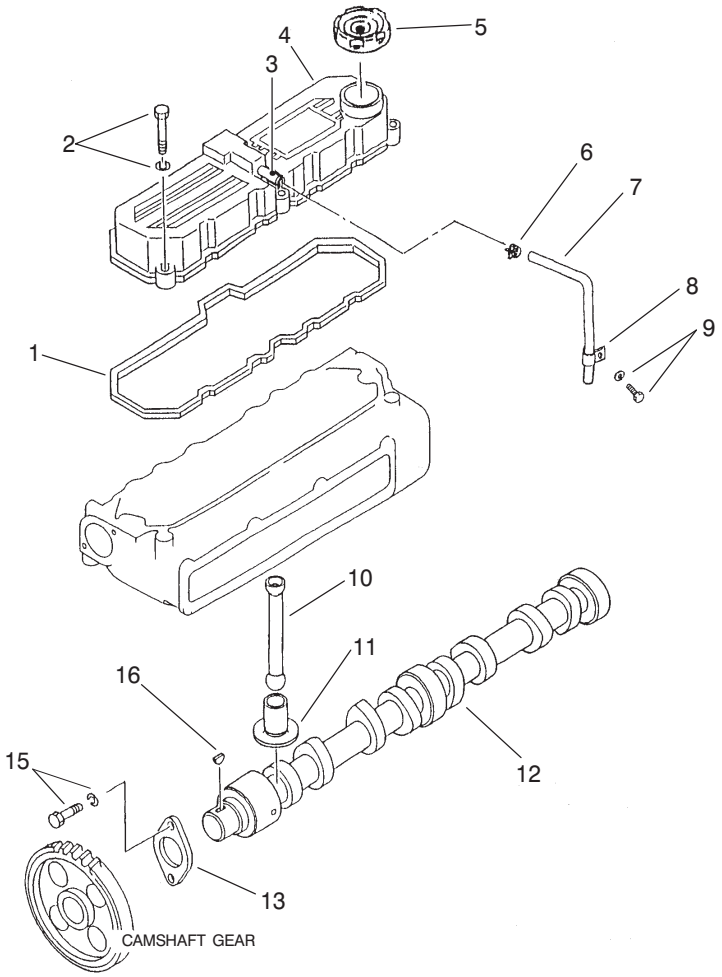

T–2951

Rocker Cover and Camshaft Assembly

Ref. No.	Part No.	Qty.	Description
1	99–1827	1	Gasket–Rocker
2	99–1828	5	Bolt w/Washer
3		1	Pipe
4		1	Cover–Rocker
5	42–7420	1	Cap–Filter, Oil
6	99–1833	1	Clip–Hose
7	99–1834	1	Hose–Breather
8	99–1835	1	Clip
9	99–1836	1	Bolt w/Washer
10	99–1832	8	Rod–Push
11	99–1831	8	Tappet
12	99–1829	1	Camshaft
13	51–5470	1	Plate–Thrust
15	99–1830	2	Bolt w/Washer
16	51–5460	1	Key–Woodruff
*	99–1826	1	Rocker Cover ASM (Incl. Ref. #3–4)

Ref. No.	Part No.	Qty.	Description

* Not Illustrated

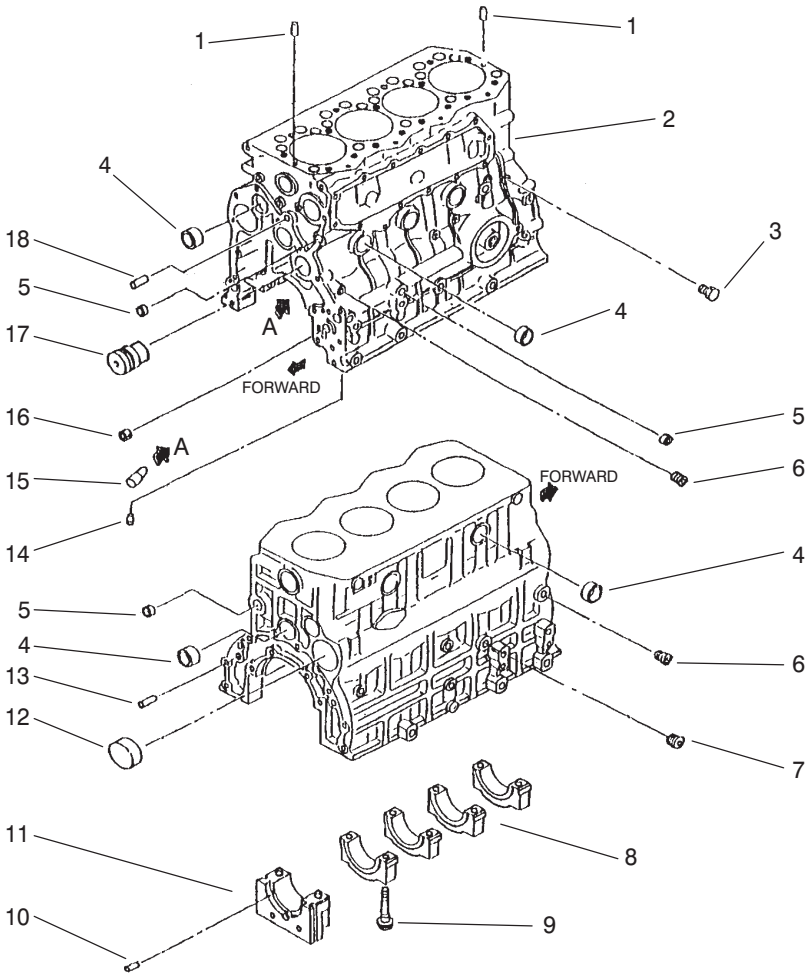

T–2952

Crankcase Assembly

Ref. No.	Part No.	Qty.	Description
1	93–3365	2	Pin–Dowel
2		1	Crankcase
3	99–1845	1	Plug–Taper
4	51–5600	10	Cap–Sealing
5	70–3370	6	Cap–Sealing
6	86–6240	5	Plug–Taper
7	56–0100	1	Plug–Taper
8		4	Cap–Bearing
9	99–1838	10	Bolt–Cap, Bearing
10	99–1842	6	Pin–Spring
11		1	Cap–Bearing
12	99–1840	1	Plug–Cam
13	70–3000	2	Pin–Dowel
14		3	Plug
15	99–1839	4	Valve–Check
16	99–1843	1	Bushing
17	99–1844	1	Shaft–Idler
18	99–1841	1	Pin–Dowel
*	99–1837	1	Crankcase ASM (Incl. Ref. #1–18)

Ref. No.	Part No.	Qty.	Description

* Not Illustrated

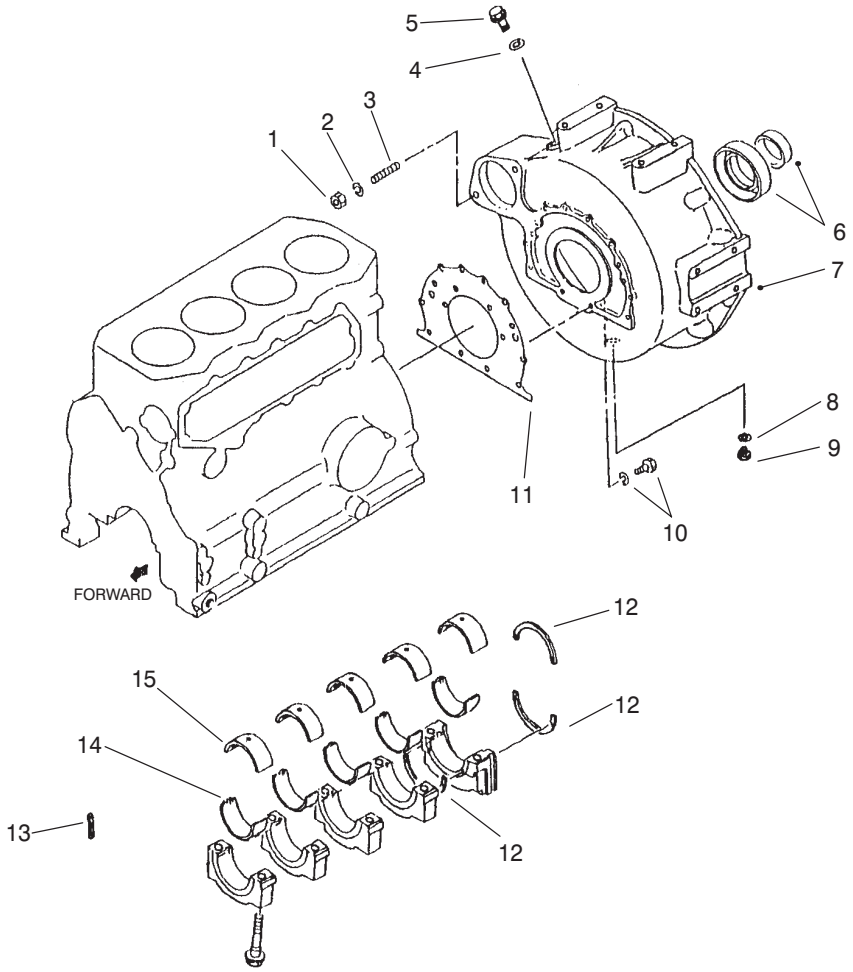

T–2953

Flywheel Housing and Main Metal Assembly

Ref. No.	Part No.	Qty.	Description
1	51–5970	2	Nut–Lock
2	51–6390	2	Washer–Spring
3	99–1858	2	Stud
4	99–1813	1	Gasket
5	99–1812	1	Plug–Drain
6	60–7430	1	Seal–Oil
7	99–1854	1	Housing–Flywheel
8	42–7290	1	Gasket
9	67–2520	1	Plug–Drain
10	99–1856	10	Bolt w/Washer
10	99–1857	2	Bolt w/Washer
11	99–1855	1	Gasket–Rear
12	99–1850	3	Plate–Thrust Std.
12	99–1851	1	Plate–Thrust O.S. 0.15
12	99–1852	1	Plate–Thrust O.S. 0.30
13	99–1853	2	Seal–Side
14		5	Set–Metal, Main
15		5	Set–Metal, Main
*	99–1846	1	Set–Metal, Main Std. (Incl. Ref. #14–15)
*	99–1847	1	Set–Metal, Main U.S. .25 (Incl. Ref. #14–15)
*	99–1848	1	Set–Metal, Main U.S. 0.50 (Incl. Ref. #14–15)
*	99–1849	1	Set–Metal, Main U.S. 0.75 (Incl. Ref. #14–15)

Ref. No.	Part No.	Qty.	Description

* Not Illustrated

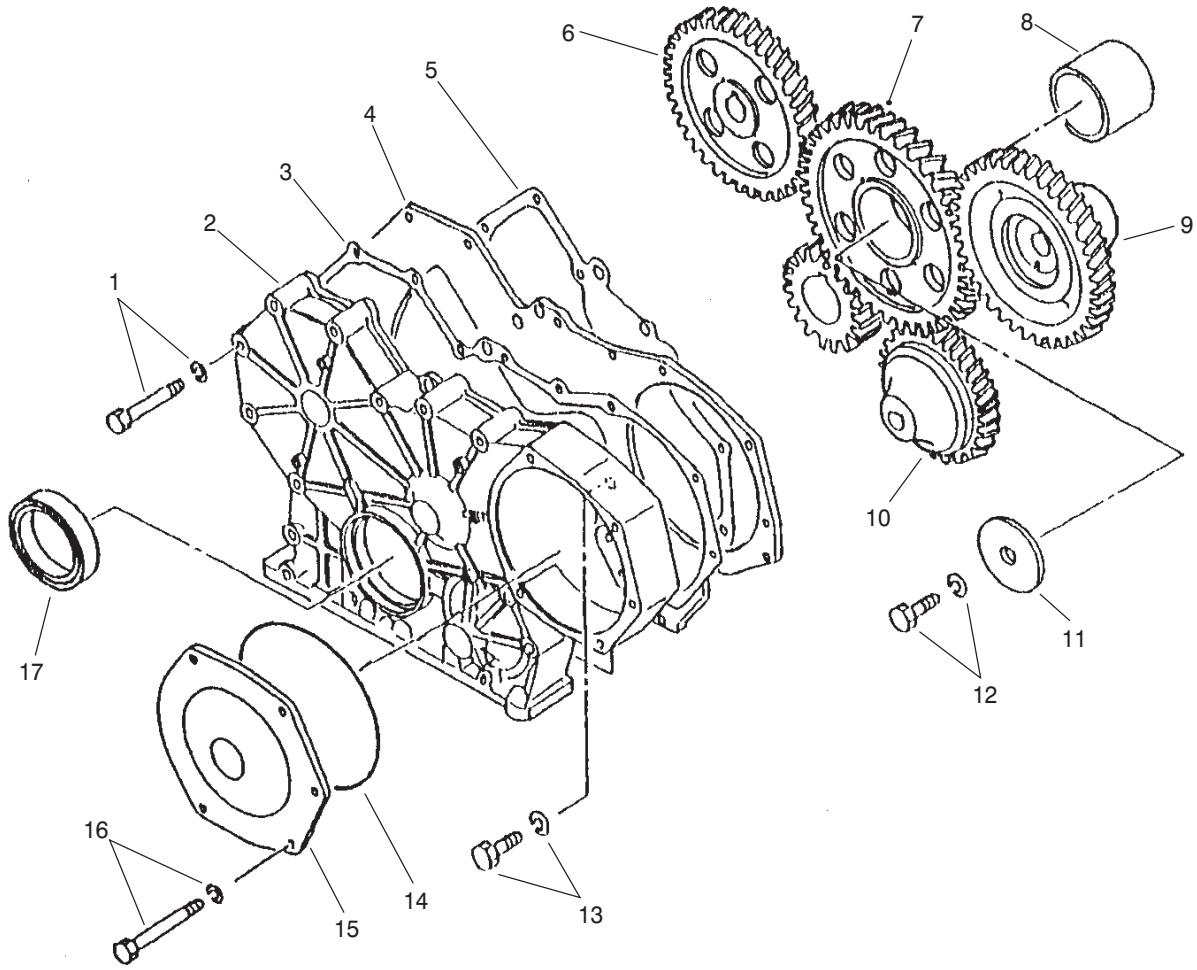

T–2954

Timing Gear Case and Timing Gear Assembly

Ref. No.	Part No.	Qty.	Description
1	99–1864	13	Bolt w/Washer
2	99–1861	1	Case–Gear, Timing
3	99–1862	1	Gasket–Gear
4	99–1859	1	Plate–Front
5	99–1860	1	Gasket–Plate, Front
6	99–1868	1	Gear–Camshaft
7		1	Gear–Idler
8		1	Bushing
9	99–1869	1	Gear–Pump, Injection
10	99–1873	1	Gear–Pump, Oil
11	99–1871	1	Plate–Thrust
12	99–1872	1	Bolt w/Washer
13	99–1810	5	Bolt w/Washer
14	99–1865	1	O–Ring
15	99–1863	1	Cover–Gear, Case
16	99–1866	5	Bolt w/Washer
17	99–1867	1	Seal–Oil
*	99–1870	1	Idler Gear ASM (Incl. Ref. #7–8)

Ref. No.	Part No.	Qty.	Description

* Not Illustrated

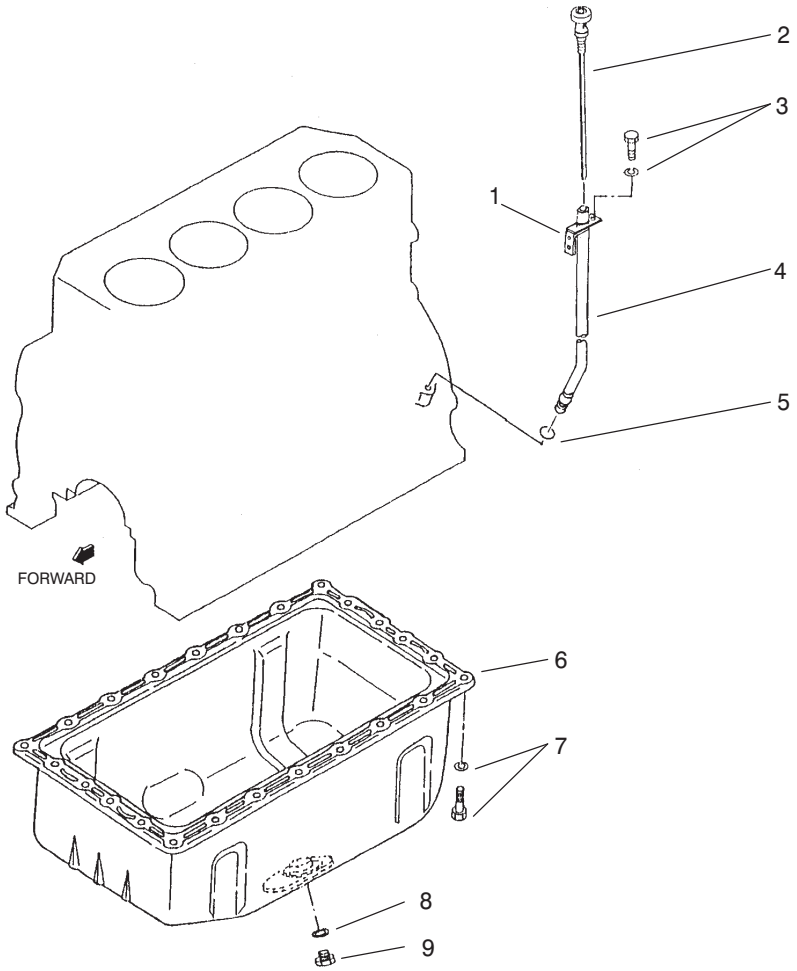

T–2955

Oil Pan and Oil Level Assembly

Ref. No.	Part No.	Qty.	Description
1	99–1877	1	Bracket–Guide, Gage
2	99–1875	1	Gage–Level, Oil
3	99–1811	1	Bolt w/Washer
4	99–1876	1	Guide–Gage, Oil Level
5	99–1878	1	O–Ring
6		1	Pan–Oil
7	99–1810	26	Bolt w/Washer
8	68–6430	1	Gasket
9	68–6420	1	Plug–Drain
*	99–1874	1	Oil Pan ASM (Incl. Ref. #6, 8 & 9)

Ref. No.	Part No.	Qty.	Description

* Not Illustrated

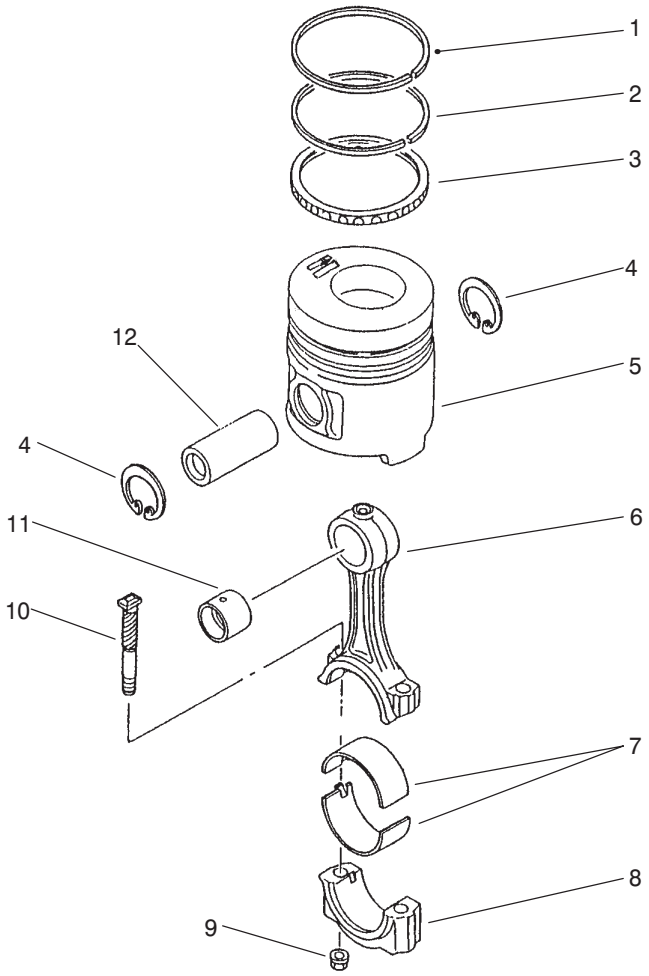

T–2956

Piston and Connecting Rod Assembly

Ref. No.	Part No.	Qty.	Description
1		4	Ring–No. 1
*	99–1884	4	Ring–Piston O.S. 0.25 (Incl. Ref. #1–3)
2		4	Ring–No. 2
*	99–1885	4	Ring–Piston O.S. 0.50 (Incl. Ref. #1–3)
3		4	Ring–Oil
4	99–1887	8	Ring–Snap
5	99–1880	4	Piston–Std.
5	99–1881	4	Piston–O.S. 0.25
5	99–1882	4	Piston–O.S. 0.50
6		4	Rod–Connecting
7	99–1891	1	Set–Metal Std.
7	99–1892	1	Set–Metal O.S. 0.25
7	99–1893	1	Set–Metal O.S. 0.50
7	99–1894	1	Set–Metal O.S. 0.75
8		4	Cap–Rod, Connecting
9	51–6230	8	Nut
10	99–1889	8	Bolt–Connecting
11	99–1890	8	Bushing–Rod, Connecting
12	99–1886	4	Pin–Piston
*	99–1888	4	Connecting Rod ASM (Incl. Ref. #6–11)
*	99–1883	4	Set–Ring, Piston Std (Incl. Ref. #1–3)

Ref. No.	Part No.	Qty.	Description

* Not Illustrated

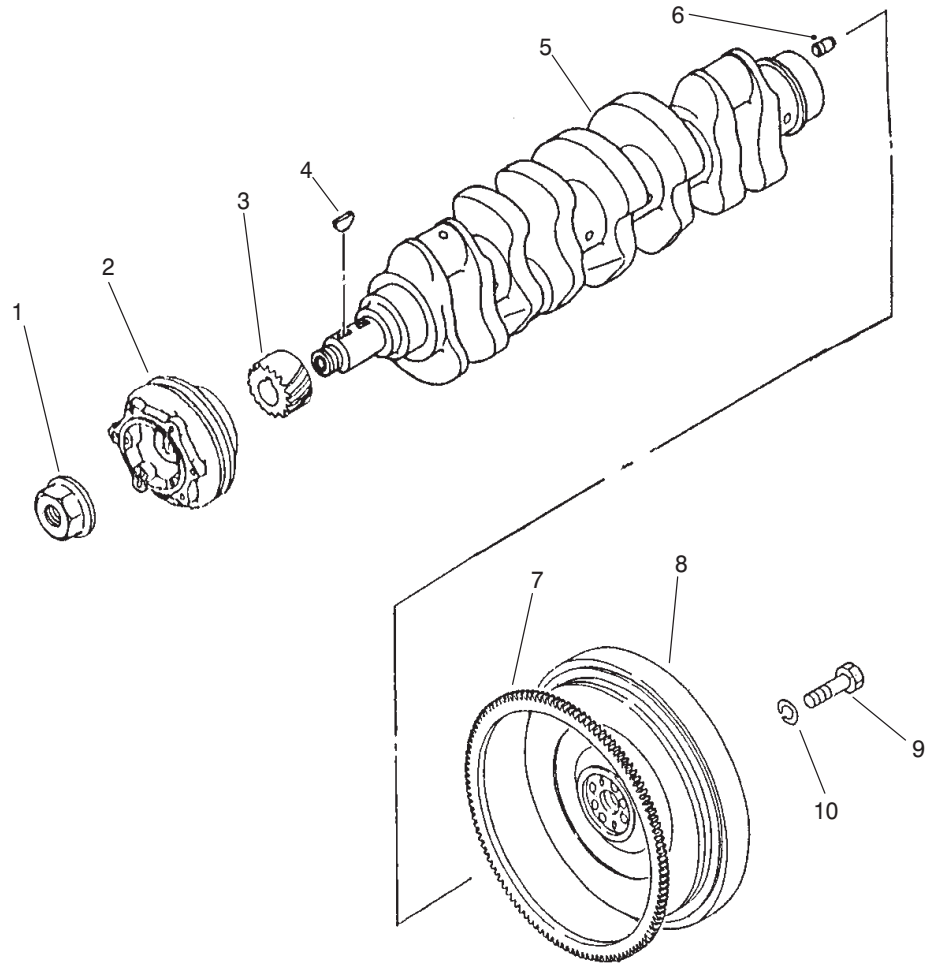

T–2957

Crankshaft and Flywheel Assembly

Ref. No.	Part No.	Qty.	Description
1	99–1897	1	Nut–Crankshaft
2	99–1896	1	Pulley–Crankshaft
3	99–1898	1	Gear–Crankshaft
4	51–5460	2	Key–Woodruff
5		1	Crankshaft
6	51–6300	2	Pin–Dowel
7	99–2100	1	Gear–Ring
8		1	Flywheel
9	70–2880	4	Bolt
10	51–8610	4	Washer–Spring
*	99–1895	1	Crankshaft ASM (Incl. Ref. #1–6)
*	99–1899	1	Flywheel ASM (Incl. Ref. #7–8)

Ref. No.	Part No.	Qty.	Description

* Not Illustrated

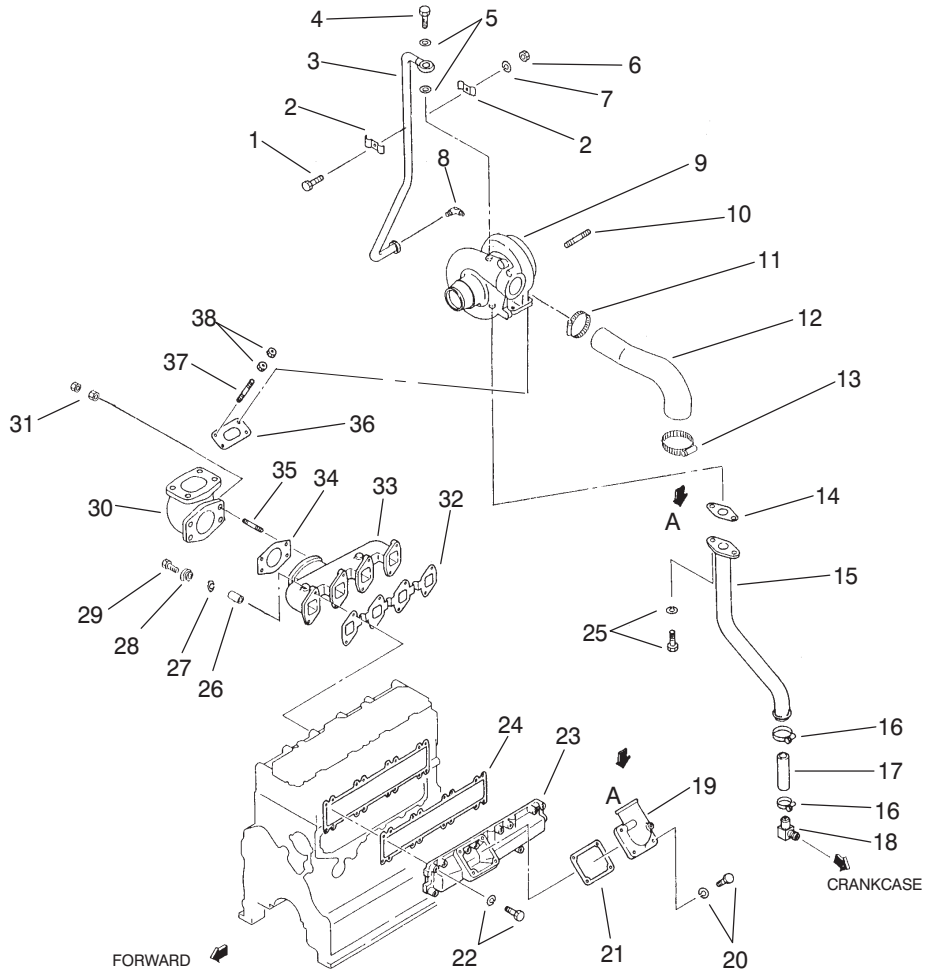

T–2958

Inlet and Exhaust Manifold Assembly

Ref. No.	Part No.	Qty.	Description
1	60–7290	1	Bolt
2	99–2125	2	Clamp
3	99–2119	1	Pipe–Oil
4	70–4980	1	Bolt–Eye
5	51–5060	2	Gasket
6	99–2126	1	Nut
7	51–7400	1	Washer–Spring
8	99–2120	1	Elbow
9	99–2124	1	Turbocharger ASM
10	99–2115	3	Stud
11	99–2117	1	Clamp
12	99–2116	1	Hose–Air
13	70–3440	1	Clamp
14	99–2121	1	Gasket–Pipe, Drain
15	99–2118	1	Pipe–Drain, Oil
16	70–3090	2	Clamp–Hose
17	99–2123	1	Hose–Oil
18	70–5310	1	Elbow
19	99–2103	1	Elbow–Inlet, Air
20	99–1811	4	Bolt w/Washer
21	99–2104	1	Gasket–Heater, Air
22	99–1828	16	Bolt w/Washer
23	99–2101	1	Manifold Inlet ASM
24	99–2102	1	Gasket–Manifold, Inlet
25	99–2122	2	Bolt w/Washer
26	99–2109	8	Spacer

Ref. No.	Part No.	Qty.	Description
27	51–7250	8	Washer–Spring
28	99–2110	8	Washer
29	99–2111	8	Bolt w/Washer
30	99–2106	1	Pipe–Exhaust
31	60–7120	8	Nut
32	99–2107	1	Gasket–Exhaust, Manifold
33	99–2108	1	Manifold Exhaust ASM
34	99–2105	1	Gasket–Exhaust
35	70–3480	4	Stud
36	99–2114	1	Gasket–Exhaust
37	99–2112	4	Stud
38	99–2113	8	Nut–Lock

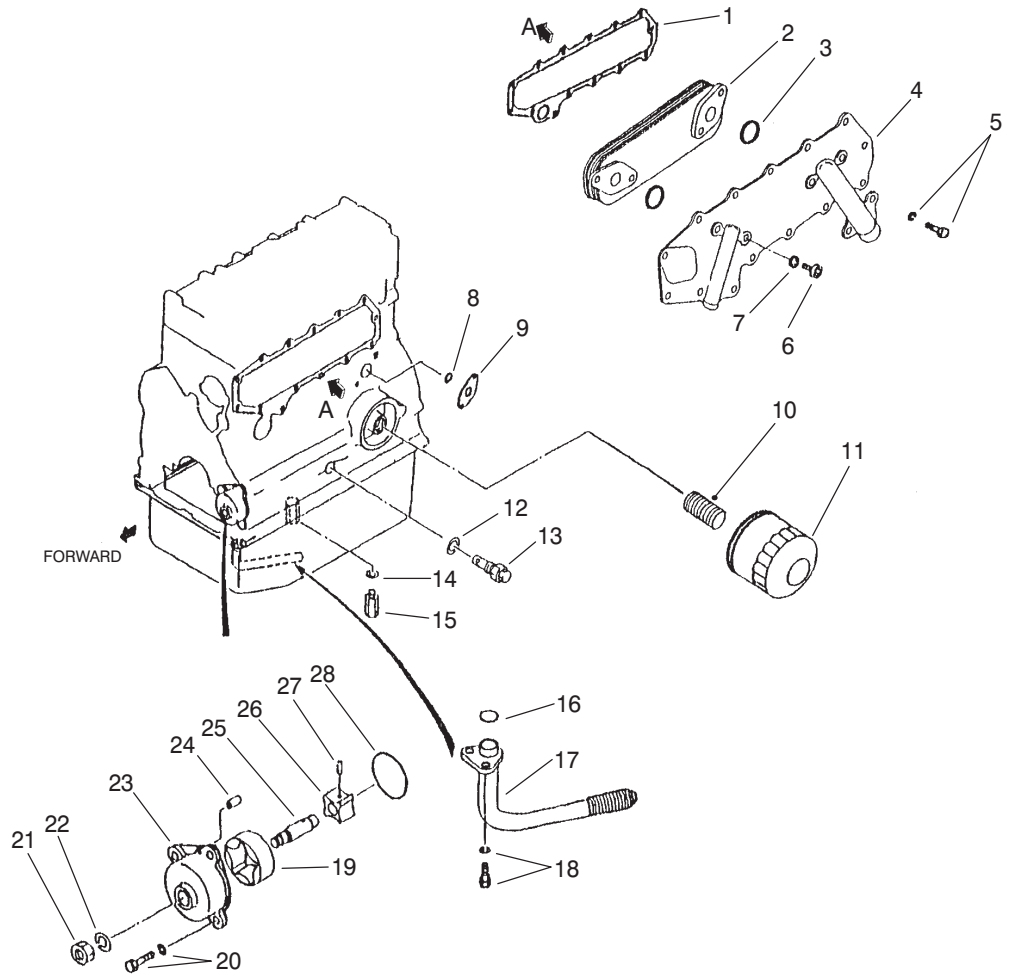

T–2959

Oil System Assembly

Ref. No.	Part No.	Qty.	Description
1	99–2139	1	Gasket–Cover, Side
2	99–2136	1	Element ASM
3	99–2141	2	O–Ring
4		1	Case ASM
5	99–1811	16	Bolt w/Washer
6	99–2138	4	Bolt–Cooler, Oil
7	99–2142	4	Gasket
8	99–2131	2	O–Ring
9	99–2140	1	Gasket
10	99–2144	1	Union–Filter, Oil
11	99–2143	1	Cartridge–Oil
12	93–3417	1	Gasket
13	99–2132	1	Valve
14	99–2134	1	Gasket
15	99–2133	1	Valve
16	99–2131	1	O–Ring
17	99–2130	1	Strainer–Oil
18	99–1830	2	Bolt w/Washer
19		1	Rotor–Outer
20	99–1811	4	Bolt w/Washer
21	99–2129	1	Nut–Jam
22	51–6390	1	Washer–Spring
23		1	Case–Pump, Oil
24		2	Pin–Dowel
25		1	Shaft–Pump, Oil
26		1	Rotor–Inner
27		1	Pin
28	99–2128	1	O–Ring
*	99–2127	1	Oil Pump ASM (Incl. Ref.#19 & 23–27)
*	99–2137	1	Case ASM
*	99–2135	1	Oil Cooler ASM (Incl. Ref. #2–4 & 6–7)

* Not Illustrated

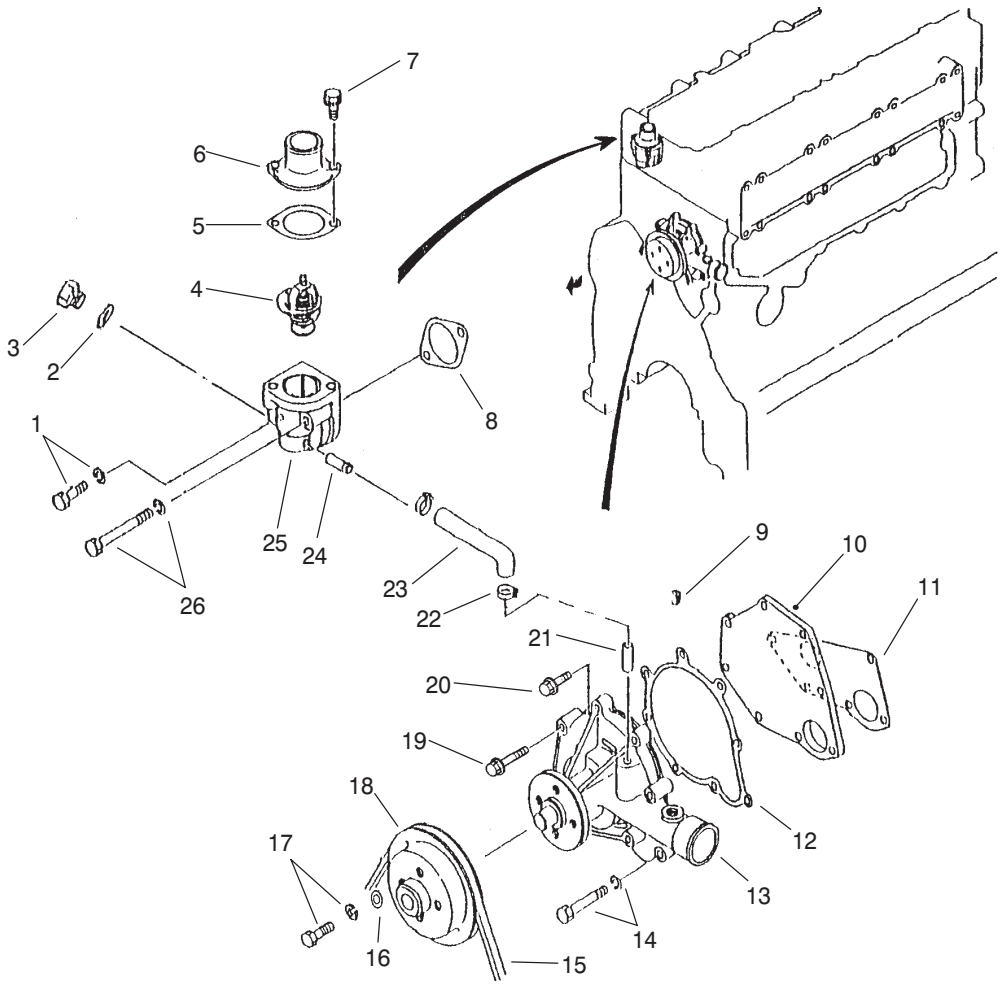

T–2960

Cooling System Assembly

Ref. No.	Part No.	Qty.	Description
1	99–2150	1	Bolt w/Washer
2	99–1813	2	Gasket
3	99–1812	2	Plug–Drain
4	99–2155	1	Thermostat
5	99–2154	1	Gasket–Thermostat
6	99–2153	1	Cover–Thermostat
7	92–2133	2	Bolt–Flange
8	51–7210	1	Gasket
9		1	Plug–Tapered
10	99–2146	1	Cover–Pump, Water
11	99–2148	1	Gasket–Pump, Water
12	99–2147	1	Gasket–Cover, Pump
13		1	Case–Pump, Water
14	99–2150	5	Bolt w/Washer
15	99–2159	1	Belt–Edge, Raw
16	51–5160	4	Washer
17	99–2160	4	Bolt w/Washer
18	99–2149	1	Pulley–Pump, Water
19	99–2151	1	Bolt–Flange
20	92–2133	2	Bolt–Flange
21		1	Pipe–Water
22	93–4297	2	Clamp–Hose
23	99–2152	1	Hose–By–Pass
24		1	Pipe
25		1	Case
26	99–2158	1	Bolt w/Washer

Ref. No.	Part No.	Qty.	Description
*	99–2157	1	Thermostat ASM (Incl. Ref.# 4–7 & 24–25)
*	99–2145	1	Water Pump ASM (Incl. Ref. #9–10, 12–13 & 19–21)
*	99–2156	1	Thermostat Case ASM (Incl. Ref. #24–25)

* Not Illustrated

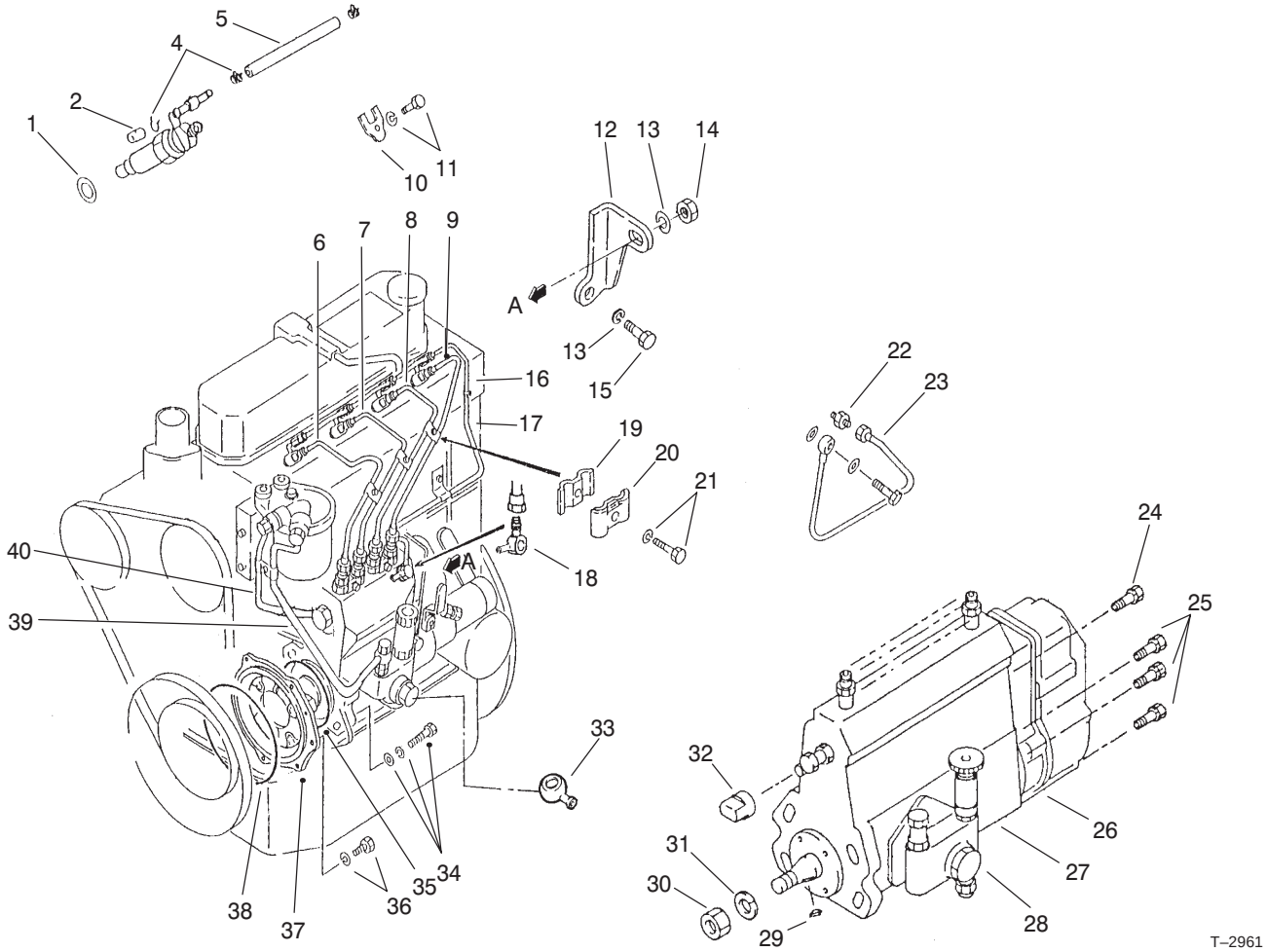

T–2961

Fuel Injection Pump Mount Assembly

Ref. No.	Part No.	Qty.	Description
1	98–7375	4	Gasket–Nozzle
2	99–2167	1	Cap
4	99–2169	7	Clip
*	99–2168	3	Oil Hose ASM (Incl. Ref. #4 & 5)
5		3	Hose–Fuel
6	99–2172	1	Pipe–Injection No. 1
7	99–2173	1	Pipe–Injection No. 2
8	99–2174	1	Pipe–Injection No. 3
9	99–2175	1	Pipe–Injection No. 4
10	99–2165	4	Support–Nozzle
11	99–2166	4	Bolt w/Washer
12	99–2170	1	Bracket–Pump
13	51–7250	2	Washer–Spring
14	60–7120	1	Nut
15	60–7280	1	Bolt
16	99–2178	1	Fuel Hose ASM
17	99–2176	1	Pipe–Return, Fuel
18	99–2177	1	Joint–Eye
19	56–0750	3	Clamp (B)
20	56–0760	3	Clamp (A)
21	99–2179	3	Bolt–w/Washer
22	99–2185	1	Connector
23	99–2184	1	Pipe–Oil
24	99–2164	1	Bolt–w/Washer
25	70–6530	6	Bolt–w/Washer

Ref. No.	Part No.	Qty.	Description
26		1	Governor ASM
27		1	Injection Body ASM
28	99–2163	1	Feed Pump ASM
29	70–6880	1	Key–Woodruff
30	70–6780	1	Nut–Hex
31	70–6680	1	Washer–Spring
32	99–2162	1	Cover–Control
33	99–2186	1	Color
34	99–2183	4	Bolt–w/Washers
35	99–2182	1	O–Ring
36	99–1811	1	Bolt–w/Washer
37	99–2171	1	Flange–Pimp, Injection
38	99–1865	1	O–Ring
39	99–2181	1	Hose
40	99–2180	1	Hose
*	99–2161	1	Injection Pump ASM (Incl. Ref. #24–32)

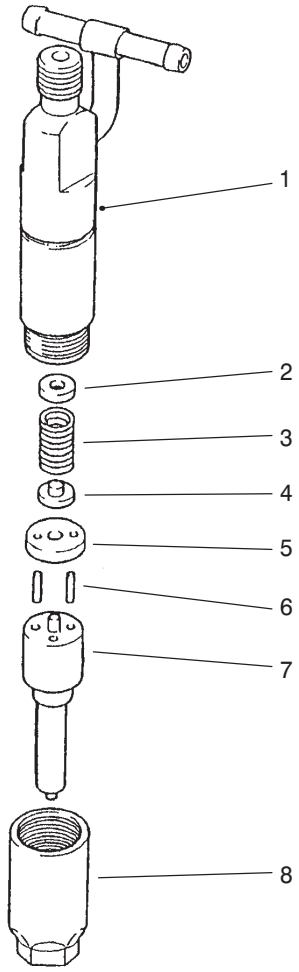

T–2962

Nozzle Assembly

Ref. No.	Part No.	Qty.	Description
1	99–2779	4	Body ASM
2	70–4860	AR	Washer–1.000mm Thick
2	70–4870	AR	Washer–1.050mm Thick
2	70–4880	AR	Washer–1.100mm Thick
2	99–2190	AR	Washer–1.150mm Thick
2	99–2191	AR	Washer–1.200mm Thick
2	99–2192	AR	Washer–1.250mm Thick
2	99–2193	AR	Washer–1.300mm Thick
2	99–2194	AR	Washer–1.350mm Thick
2	99–2195	AR	Washer–1.400mm Thick
2	99–2196	AR	Washer–1.450mm Thick
2	99–2197	AR	Washer–1.500mm Thick
2	99–2198	AR	Washer–1.550mm Thick
2	99–2199	AR	Washer–1.600mm Thick
2	99–2200	AR	Washer–1.650mm Thick
2	99–2201	AR	Washer–1.700mm Thick
2	99–2202	AR	Washer–1.750mm Thick
2	99–2203	AR	Washer–1.800mm Thick
2	70–4890	AR	Washer–1.275mm Thick
2	70–4900	AR	Washer–1.325mm Thick
2	99–2204	AR	Washer–1.375mm Thick
2	99–2205	AR	Washer–1.425mm Thick
2	99–2206	AR	Washer–1.475mm Thick
2	70–4920	AR	Washer–0.950mm Thick
2	99–2207	AR	Washer–0.700mm Thick
2	99–2217	AR	Washer–0.750mm Thick

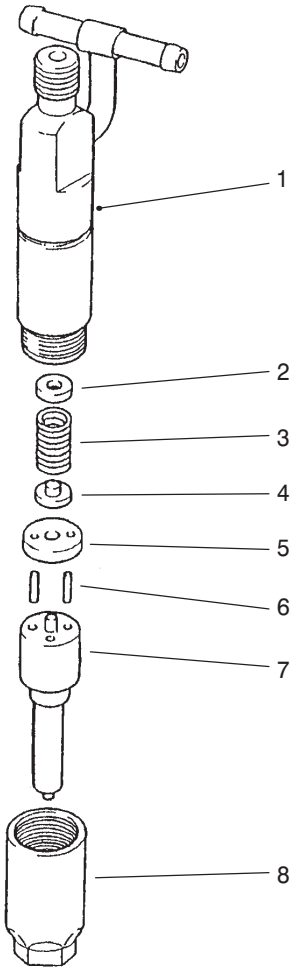

T–2962

Nozzle Assembly (Continued)

Ref. No.	Part No.	Qty.	Description
2	99–2208	AR	Washer–0.800mm Thick
2	99–2209	AR	Washer–0.850mm Thick
2	99–2210	AR	Washer–0.900mm Thick
2	99–2211	AR	Washer–0.975mm Thick
2	99–2212	AR	Washer–1.025mm Thick
2	99–2213	AR	Washer–1.075mm Thick
2	99–2214	AR	Washer–1.125mm Thick
2	99–2215	AR	Washer–1.175mm Thick
2	99–2216	AR	Washer–1.225mm Thick
3	99–2281	4	Spring–Pressure
4	99–2280	4	Pin–Pressure
5	99–2218	4	Packing
6	70–6830	8	Pin–Straight
7	99–2189	4	Nozzle Tip ASM
8	70–4840	4	Nut–Retaining
*	99–2187	4	Nozzle ASM (Incl. Ref. #1–8)

Ref. No.	Part No.	Qty.	Description
*	99–2188	4	Holder ASM (Incl. Ref. #1–6 & 8)

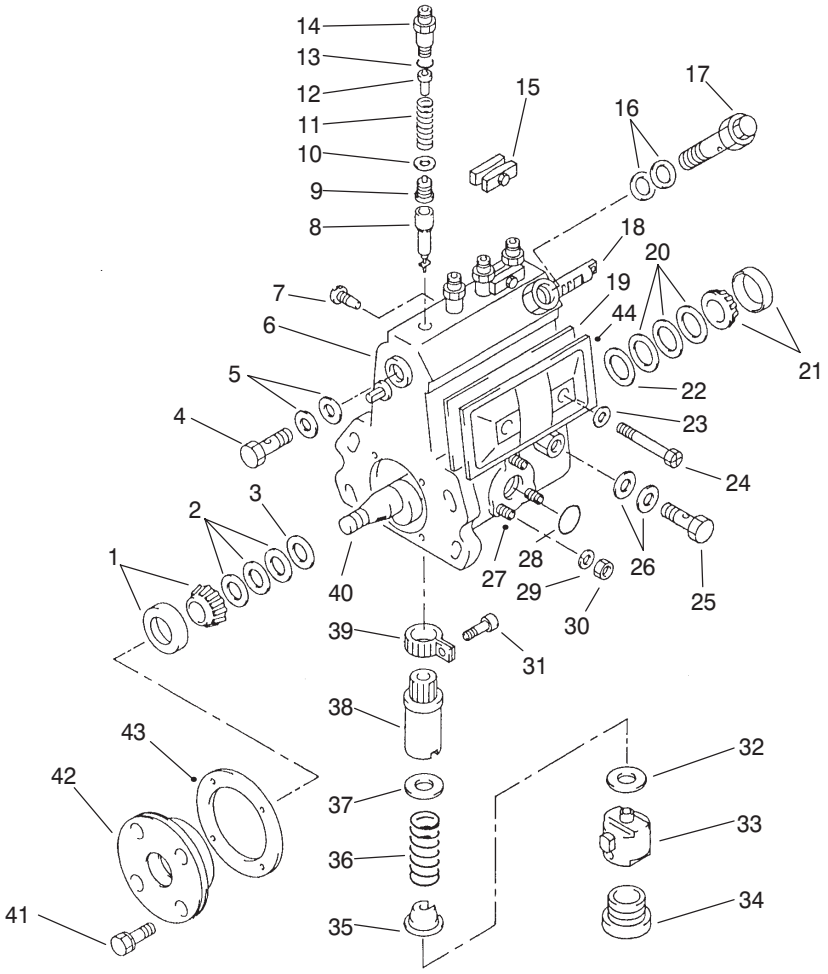

T–2963

Injection Pump Assembly

Ref. No.	Part No.	Qty.	Description
1	70–6840	1	Bearing–Roller
2	70–3780	AR	Shim–0.10mm Thick
2	70–3790	AR	Shim–0.15mm Thick
2	70–3800	AR	Shim–0.30mm Thick
2	70–3810	AR	Shim–0.50mm Thick
2	99–2240	AR	Shim–1.00mm Thick
2	99–2241	AR	Shim–1.50mm Thick
2	99–2242	AR	Shim–0.12mm Thick
2	99–2243	AR	Shim–0.14mm Thick
2	99–2244	AR	Shim–0.18mm Thick
2	99–2245	AR	Shim–0.03mm Thick
3	70–3700	1	Ring–Adjust
4	70–6940	1	Screw–Hollow
5	70–3870	2	Washer–Union
6		1	Housing–Pump
7	99–2234	1	Screw–Guide, Rack
8	99–2224	4	Element–Pump
9	99–2223	4	Valve–Delivery
10	70–3530	4	Gasket–Valve
11	99–2222	4	Spring–Valve
12	99–2221	4	Stopper–Valve
13	70–6910	4	O–Ring
14	99–2220	4	Holder–Valve
15	70–3880	2	Plate–Set
16	70–3860	2	Washer–Union
17	99–2239	1	Valve ASM

Ref. No.	Part No.	Qty.	Description
18	99–2233	1	Rack–Control
19	70–3930	1	Gasket–Plate, Cover
20	70–3710	AR	Shim–0.10mm Thick
20	70–3720	AR	Shim–0.12mm Thick
20	70–3730	AR	Shim–0.14mm Thick
20	70–3740	AR	Shim–0.16mm Thick
20	70–3750	AR	Shim–0.18mm Thick
20	70–3760	AR	Shim–0.50mm Thick
20	70–3770	AR	Shim–0.30mm Thick
20	99–2228	AR	Shim–1.00mm Thick
20	99–2229	AR	Shim–1.50mm Thick
20	99–2230	AR	Shim–2.00mm Thick
20	99–2231	AR	Shim–0.03mm Thick
21	70–6850	1	Bearing–Roller
22	70–3690	1	Ring–Adjusting
23	70–3900	2	Packing
24	70–3950	2	Screw
25	70–6930	1	Screw–Hollow
26	70–3910	2	Washer–Nipple
27	70–6720	3	Stud
28	70–6900	1	O–Ring
29	99–2238	3	Washer–Spring
30	99–2237	3	Nut–Hex
31	70–3570	4	Screw–Clamp, Pinion
32	70–3970	AR	Shim–0.60mm Thick
32	70–3980	AR	Shim–0.70mm Thick

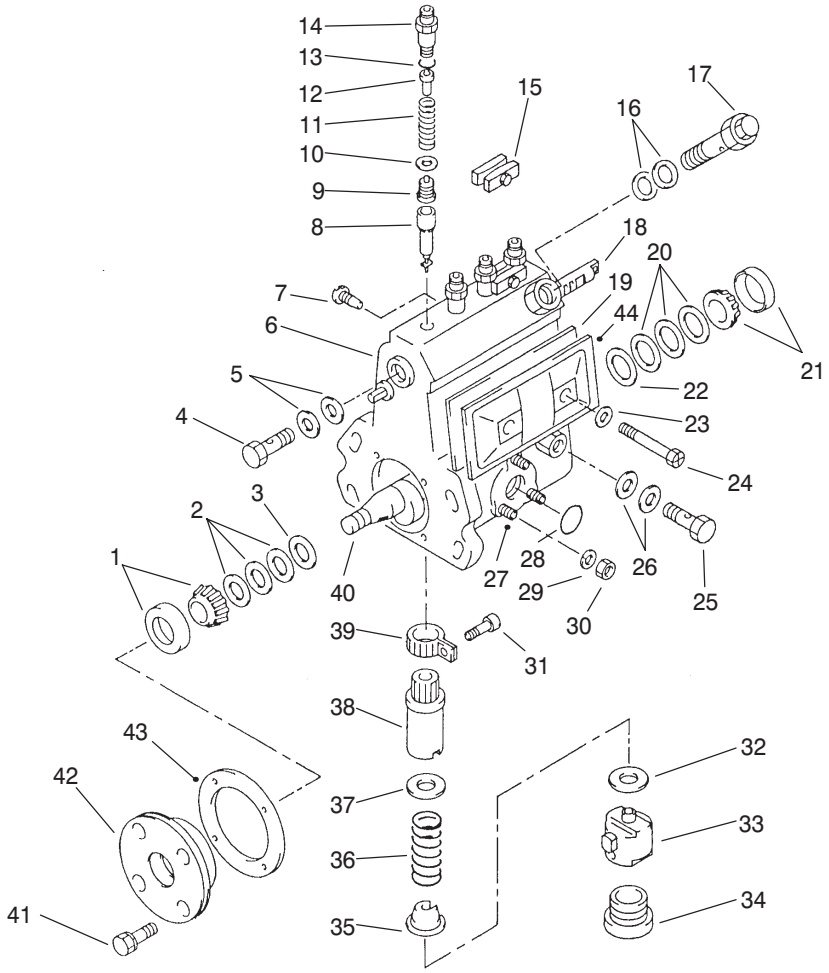

T–2963

Injection Pump Assembly (Continued)

Ref. No.	Part No.	Qty.	Description
32	70–3990	AR	Shim–0.80mm Thick
32	70–4000	AR	Shim–0.90mm Thick
32	70–4010	AR	Shim–1.00mm Thick
32	70–4020	AR	Shim–1.10mm Thick
32	70–4030	AR	Shim–1.20mm Thick
32	70–4040	AR	Shim–1.30mm Thick
32	70–4050	AR	Shim–1.40mm Thick
32	70–4060	AR	Shim–0.10mm Thick
32	70–4070	AR	Shim–0.20mm Thick
32	70–4080	AR	Shim–0.30mm Thick
32	70–4090	AR	Shim–0.40mm Thick
32	70–4100	AR	Shim–0.50mm Thick
32	70–4110	AR	Shim–0.15mm Thick
32	99–2236	AR	Shim–0.13mm Thick
33	70–3630	4	Tappet
34	70–3670	4	Plug–Screw
35	70–3610	4	Sheet–Spring, Lower
36	99–2227	4	Spring–Plunger
37	99–2226	4	Sheet–Spring, Upper
38	99–2225	4	Sleeve–Control
39	70–3560	4	Pinion–Control
40	70–3680	1	Camshaft
41	70–6540	4	Bolt–w/Washer
42	70–3820	1	Cover–Bearing
43	99–2232	1	Gasket–Cover, Bearing
44	70–3940	1	Cover–Plate

Ref. No.	Part No.	Qty.	Description
*	99–2235	1	Pump Cover ASM (Incl. Ref.#23–24 &44)

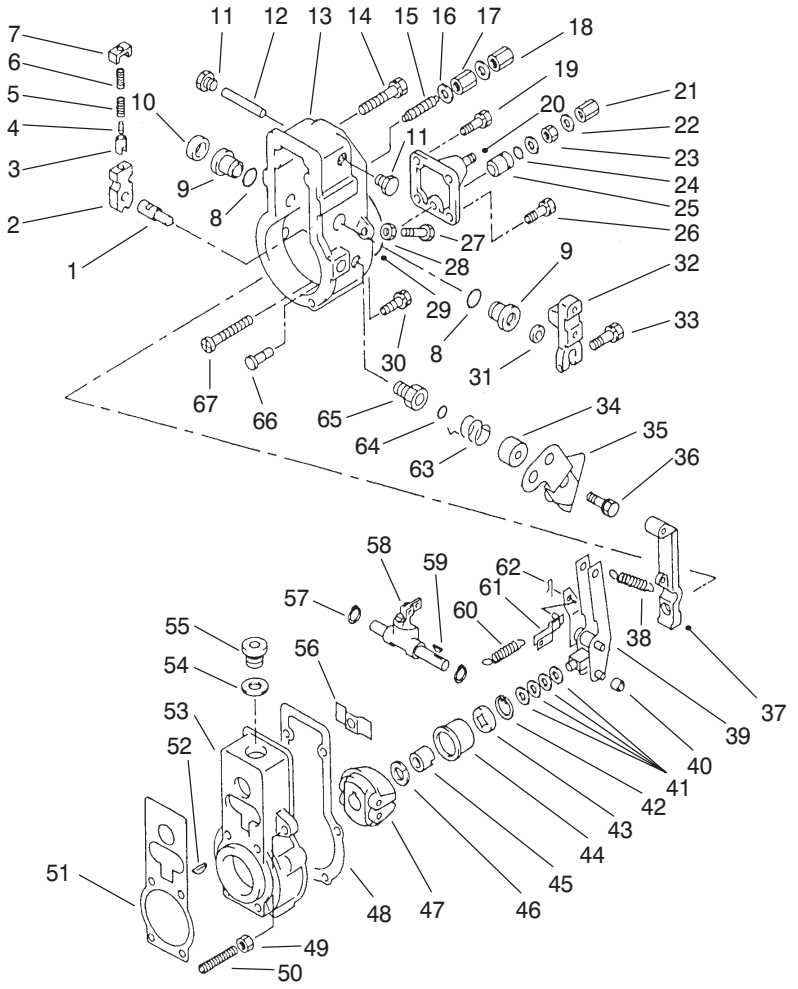

T–2964

Governor Assembly

Ref. No.	Part No.	Qty.	Description
1	70–4480	1	Shaft–Governor
2	70–4470	1	Lever–Support
3	70–4490	1	Cup–Spring
4	70–4510	1	Spring
5	70–4520	1	Spring
6	70–4500	1	Spring
7	70–4460	1	Plate–Cap
8	70–6510	2	O–Ring
9	70–4230	2	Bushing–Lever
10	70–4580	1	Cap–Lever
11	70–4360	2	Plug–Screw
12	70–4350	1	Shaft–Lever
13	70–4400	1	Cover–Governor
14	70–6740	2	Bolt w/Washer
15	99–2251	1	Capsule
16	70–3890	2	Washer–Nipple
17	70–4310	1	Nut–Lock, Adapter
18	70–4440	1	Nut–Cap
19	70–6540	2	Bolt w/Washer
20	99–2254	1	Plate–Cover
21	99–2248	1	Nut–Cap
22	70–6690	2	Washer–Plate
23	99–2260	1	Nut–Hex
24	70–6500	1	O–Ring
25	70–4330	1	Bushing
26	99–2255	2	Bolt w/Washer

Ref. No.	Part No.	Qty.	Description
27	70–4430	1	Screw–Adjusting
28	70–6560	1	Nut w/Hole
29	70–6790	1	Packing–Plate, Rubber
30	70–6750	4	Bolt w/Washer
31	70–6920	1	Seal–Oil
32	99–2253	1	Lever–Adjusting
33	70–6730	1	Bolt w/Washer
34	70–4530	1	Cover–Spring
35	70–4570	1	Lever–Stop
36	70–6520	1	Bolt w/Washer
37	99–2249	1	Lever–Tension
38	70–4370	1	Spring–Control
39	70–4320	1	Tension Control ASM
40	70–4540	1	Slider–Supporting
41	70–6610	AR	Washer–Plate 0.2mm Thick
41	70–6620	AR	Washer–Plate 0.3mm Thick
41	70–6630	AR	Washer–Plate 0.4mm Thick
41	70–6640	AR	Washer–Plate 0.1mm Thick
41	70–6650	AR	Washer–Plate 1.0mm Thick
42	70–6490	1	Ring–Snap
43	70–4200	1	Plate

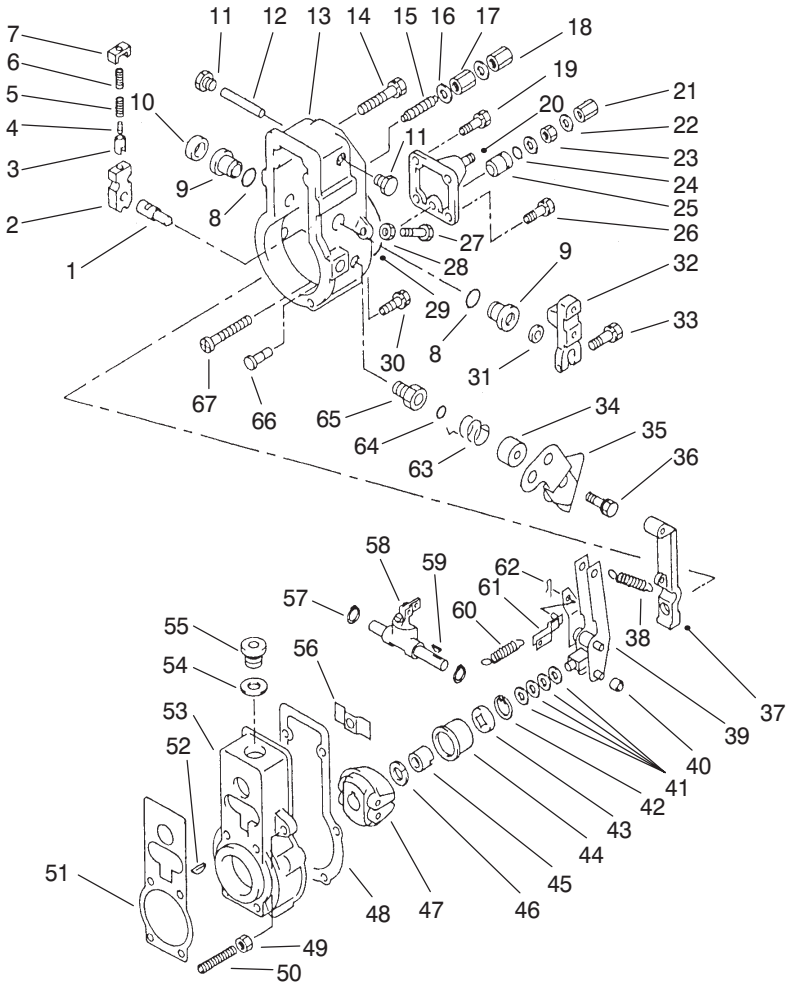

T–2964

Governor Assembly (Continued)

Ref. No.	Part No.	Qty.	Description
44	70–4190	1	Sleeve–Governor (Incl. Ref. #42–43)
45	70–4180	1	Nut–Round
46	70–6670	1	Washer–Spring
47	70–4170	1	Flyweight ASM
48	99–2258	1	Gasket
49	99–2250	1	Nut–Hex
50	99–2247	1	Screw–Adjust
51	99–2259	1	Gasket
52	70–6870	1	Key–Woodruff
53	99–2246	1	Housing–Governor
54	70–6710	1	Washer–Plate, Copper
55	70–4590	1	Plug–Screw
56	70–4210	1	Plate
57	70–6810	2	Washer–Snap
58	99–2252	1	Lever–Swivelling
59	70–6860	1	Key–Woodruff
60	70–4380	1	Spring–Start
61	70–4340	1	Shackle
62	70–6480	1	Pin–Split
63	99–2257	1	Spring
64	70–6890	1	O–Ring
65	99–2256	1	Bushing–Bearing
66	70–4410	1	Pin–Stop
67	70–4390	1	Screw–Adjusting

Ref. No.	Part No.	Qty.	Description

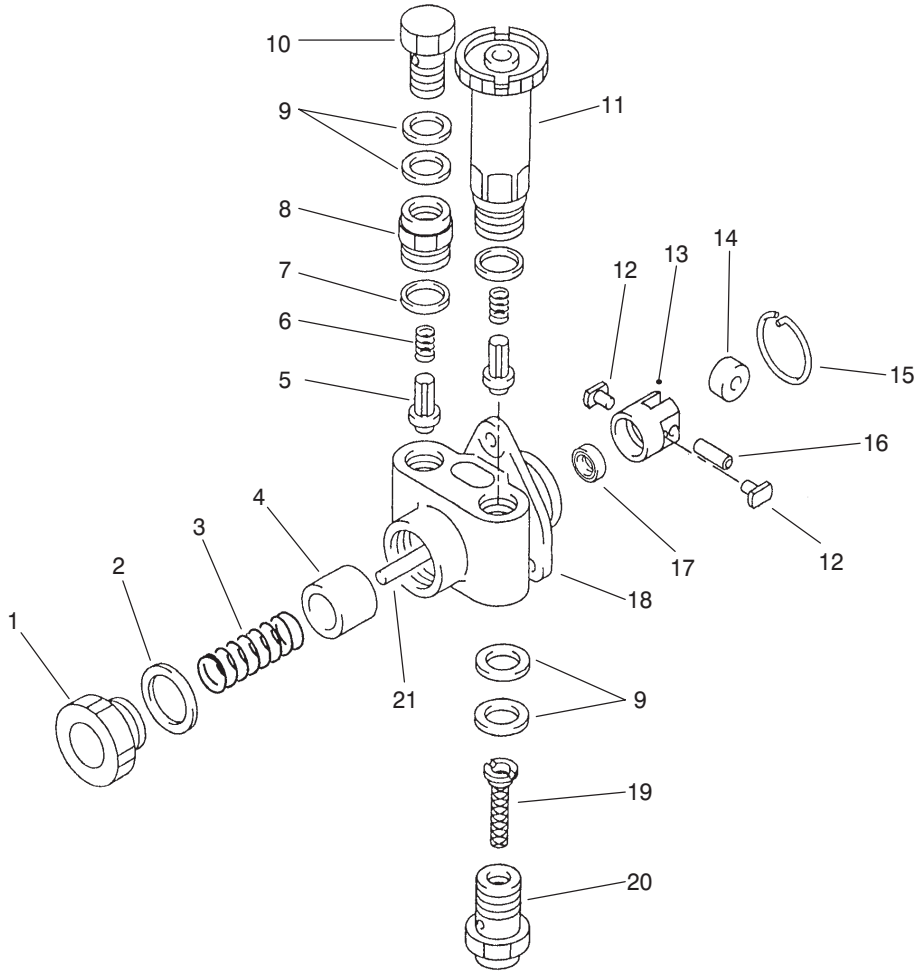

T–2965

Feed Pump Assembly

Ref. No.	Part No.	Qty.	Description
1	70–4780	1	Plug–Chamber
2	70–6700	1	Washer
3	70–4770	1	Spring–Piston
4	99–2263	1	Piston
5	70–4610	2	Valve–Check
6	70–4620	2	Spring–Valve
7	70–4630	2	Gasket–Plug
8	70–4640	1	Support–Valve
9	99–2262	4	Washer–Union
10	70–6940	1	Screw–Hollow
11	70–4650	1	Pump–Priming
12	70–4760	2	Block–Sliding
13	70–4730	1	Tappet–Pump, Feed
14	70–4740	1	Roller–Tappet
15	70–6820	1	Ring–Snap
16	70–4750	1	Pin–Roller
17	99–2282	1	Seal–Oil
18	70–4600	1	Housing ASM (Incl. Ref. #17 & 20)
19	70–4790	1	Filter–Fuel
20	70–4800	1	Screw–Hollow
21	99–2261	1	Rod–Push
*	70–5700	1	Feed Pump ASM (Incl. Ref. #1–21)

Ref. No.	Part No.	Qty.	Description

* Not Illustrated

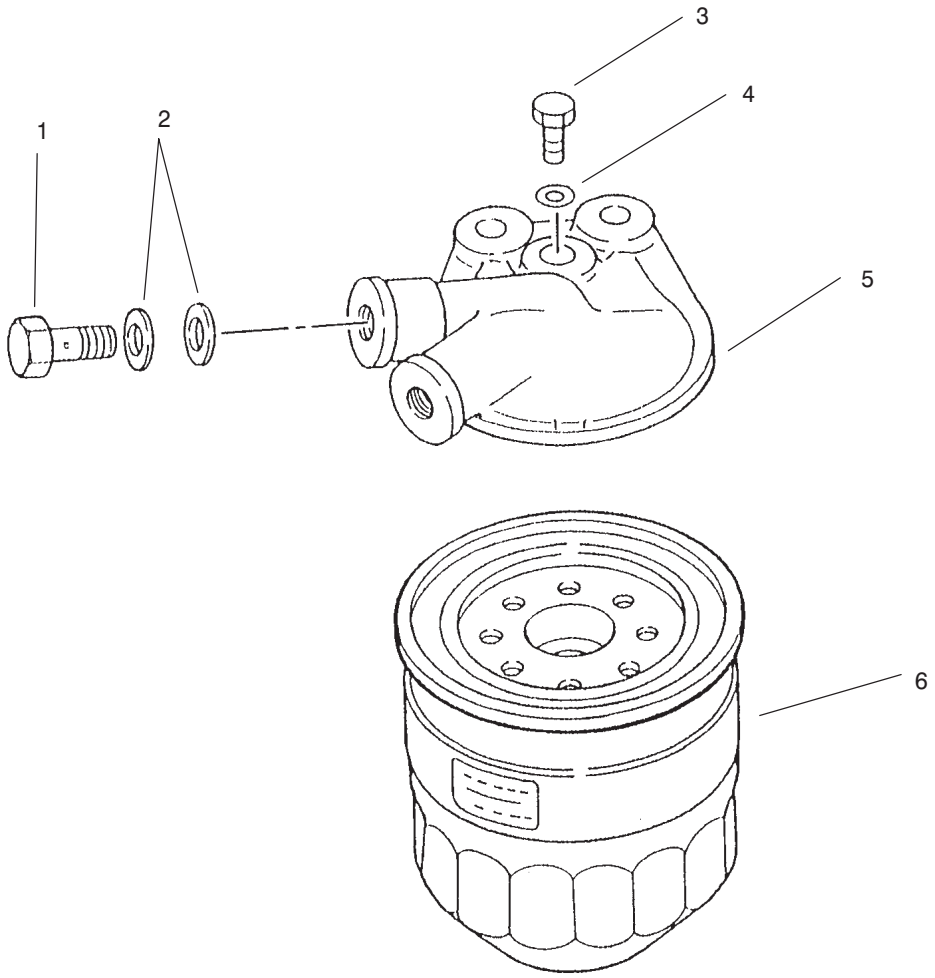

T–2966

Fuel Filter Assembly

Ref. No.	Part No.	Qty.	Description
1	70–3250	2	Bolt–Connector
2	51–5390	4	Packing–Connector
3	70–3240	1	Plug–Air
4	51–5840	1	Washer–Sealing
5	70–5720	1	Bracket
6	70–5730	1	Cartridge ASM
*	70–5710	1	Fuel Filter ASM (Incl. Ref. #1–6)

Ref. No.	Part No.	Qty.	Description

* Not Illustrated

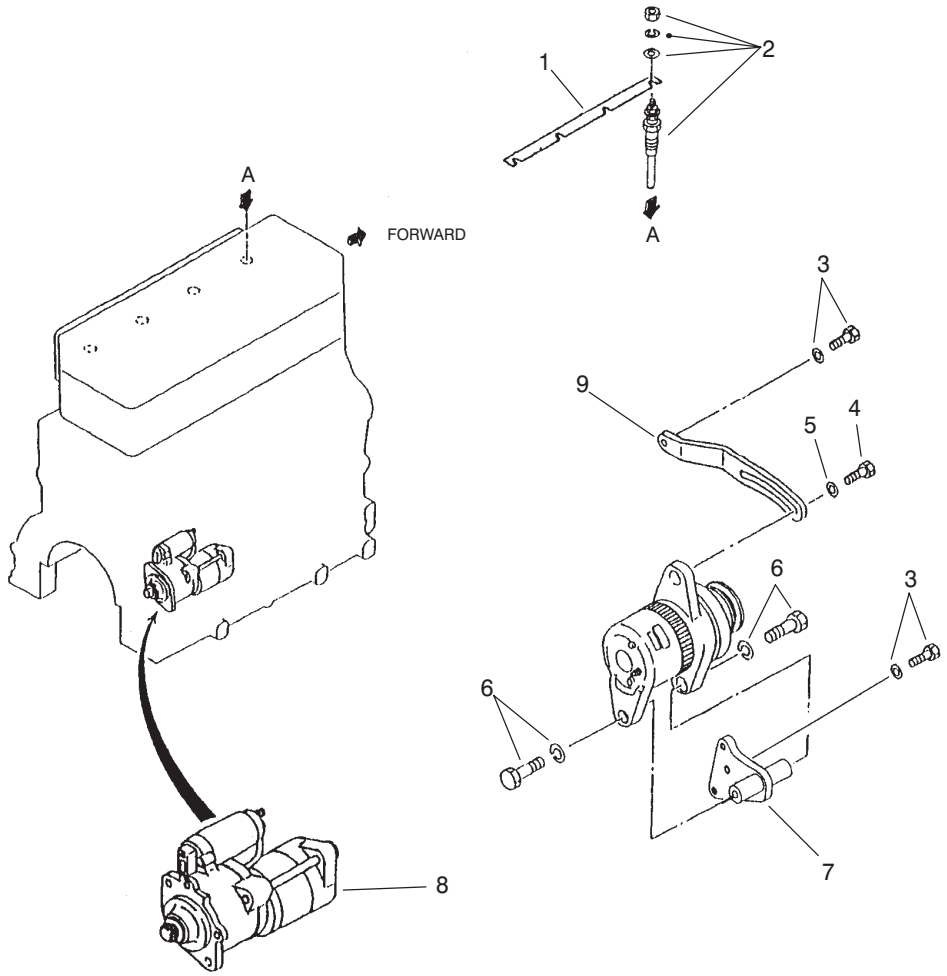

T–2967

Electrical Components Assembly

Ref. No.	Part No.	Qty.	Description
1	99–2265	1	Plate–Connection
2	99–2266	4	Plug–Glow
3	99–1811	2	Bolt w/Washer
4	67–4660	1	Bolt–Flange
5	54–8660	1	Washer
6	99–1857	2	Bolt w/Washer
7	99–2268	1	Bracket–Alternator
8	99–2267	1	Starter ASM
9	99–2270	1	Plate–Adjusting

Ref. No.	Part No.	Qty.	Description

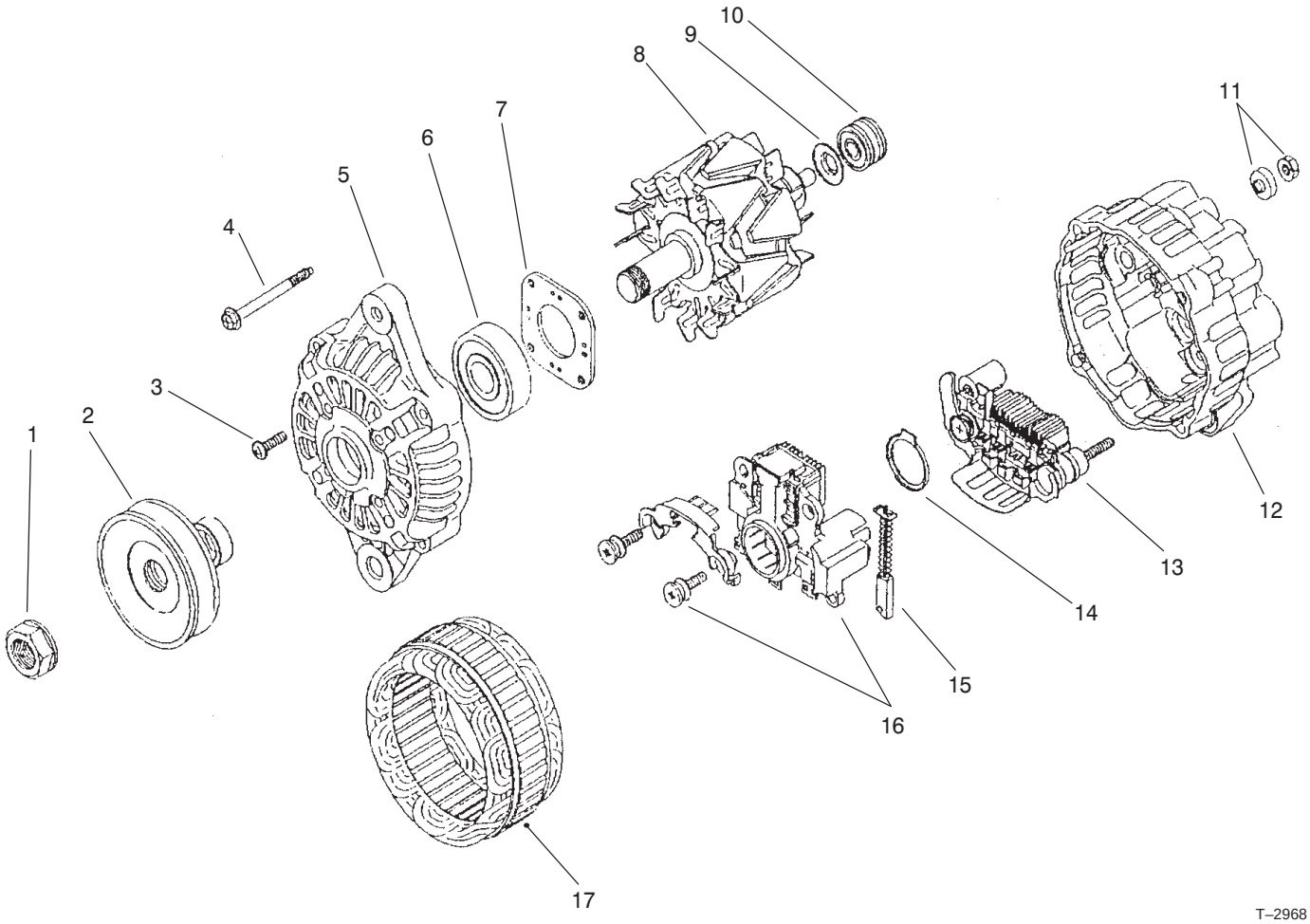

T–2968

Alternator Assembly

Ref. No.	Part No.	Qty.	Description
1	93–3578	1	Nut
2	99–2271	1	Pulley ASM
3	93–3582	1	Set–Screw
4	93–3580	1	Set–Bolt
5		1	Front Cover ASM
6	93–3583	1	Bearing–Front
7		1	Plate
8		1	Rotor
9		1	Washer
10	93–3585	1	Bearing–Rear
11	99–2275	1	Set–Nut
12		1	Rear Cover ASM
13	99–2274	1	Rectifier ASM
14		1	Ring–Retaining
15	93–3589	2	Brush
16		1	Regulator ASM
17	93–3586	1	Stator ASM
*	99–2269	1	Alternator ASM (Incl. Ref. #1–17)
*	99–2272	1	Front Bracket ASM (Incl. Ref. #3 & 5–7)
*	93–3584	1	Rotor ASM (Incl. Ref. #8–10)
*	99–2273	1	Rear Bracket ASM (Incl. Ref. #11–16)

Ref. No.	Part No.	Qty.	Description
*	93–3588	1	Set–Regulator (Incl. Ref. #14–16)

* Not Illustrated

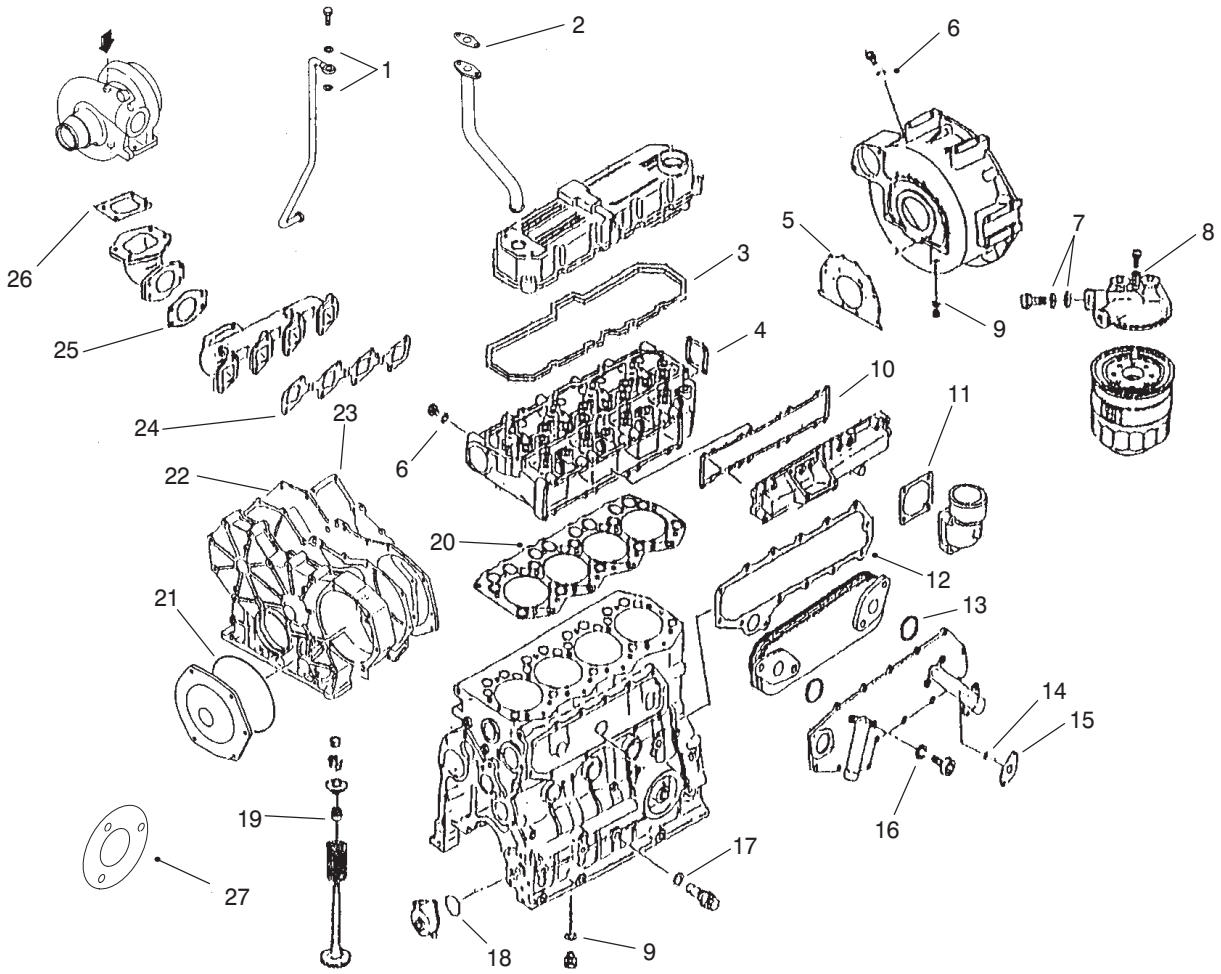

Overhaul Gasket Kit Assembly

Ref. No.	Part No.	Qty.	Description
1	51–5060	2	Gasket
2	99–2104	1	Gasket
3	99–1827	1	Gasket–Rocker
4	99–1809	1	Gasket–Head, Cylinder
5	99–1855	1	Gasket–Rear
6	99–1813	2	Gasket
7	51–5390	10	Washer–Sealing
8	51–5840	1	Washer–Sealing
9	99–2134	1	Gasket
10	99–2102	1	Gasket–Manifold, Inlet
11	99–2104	1	Gasket
12	99–2139	1	Gasket–Cover, Side
13	99–2141	2	O–Ring
14	99–2131	3	O–Ring
15	99–2140	1	Gasket
16	99–2142	4	Gasket
17	93–3417	1	Gasket
18	99–2128	1	O–Ring
19	99–1817	8	Seal–Stem, Valve
20	99–1807	1	Gasket–Head, Cylinder
21	99–1865	2	O–Ring
22	99–1862	1	Gasket–Rear
23	99–1837	1	Gasket–Plate, Front
24	99–2105	1	Gasket–Manifold, Exhaust
25	99–2107	1	Gasket–Exhaust
26	99–2114	1	Gasket–Exhaust
27	99–2277	1	Gasket

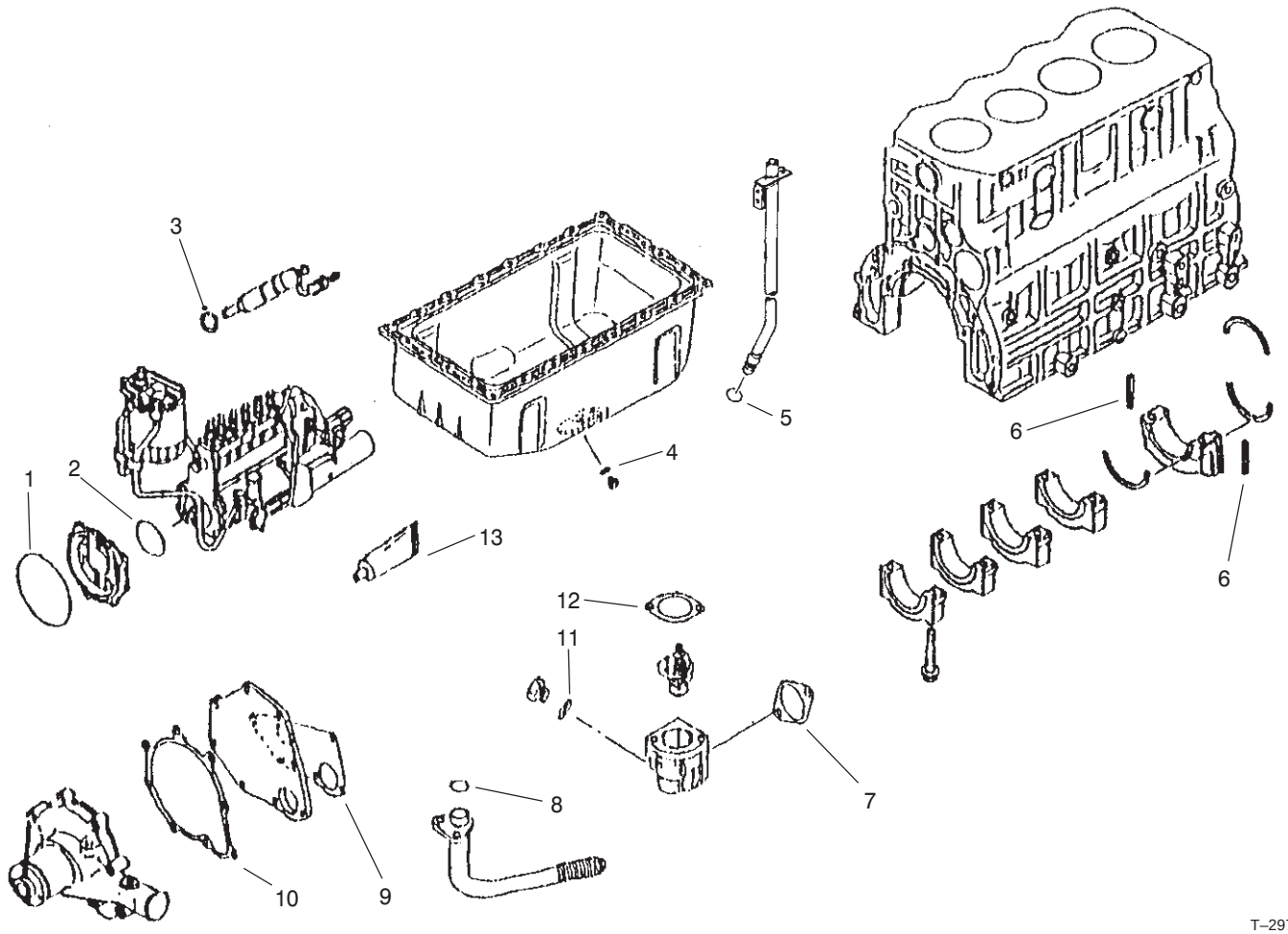

T–2970

Overhaul Gasket Kit Assembly (Continued)

Ref. No.	Part No.	Qty.	Description
1	99–1865	2	O–Ring
2	99–2182	1	O–Ring
3	98–7375	4	Gasket–Nozzle
4	68–6430	1	Gasket
5	99–1878	1	O–Ring
6	99–1853	2	Seal–Side
7	51–7210	1	Gasket
8	99–2131	3	O–Ring
9	99–2148	1	Gasket–Water
10	99–2147	1	Gasket–Cover, Pump
11	99–1813	2	Gasket
12	99–2154	1	Gasket–Thermostat
13	93–3599	1	Gasket–Liquid

Ref. No.	Part No.	Qty.	Description

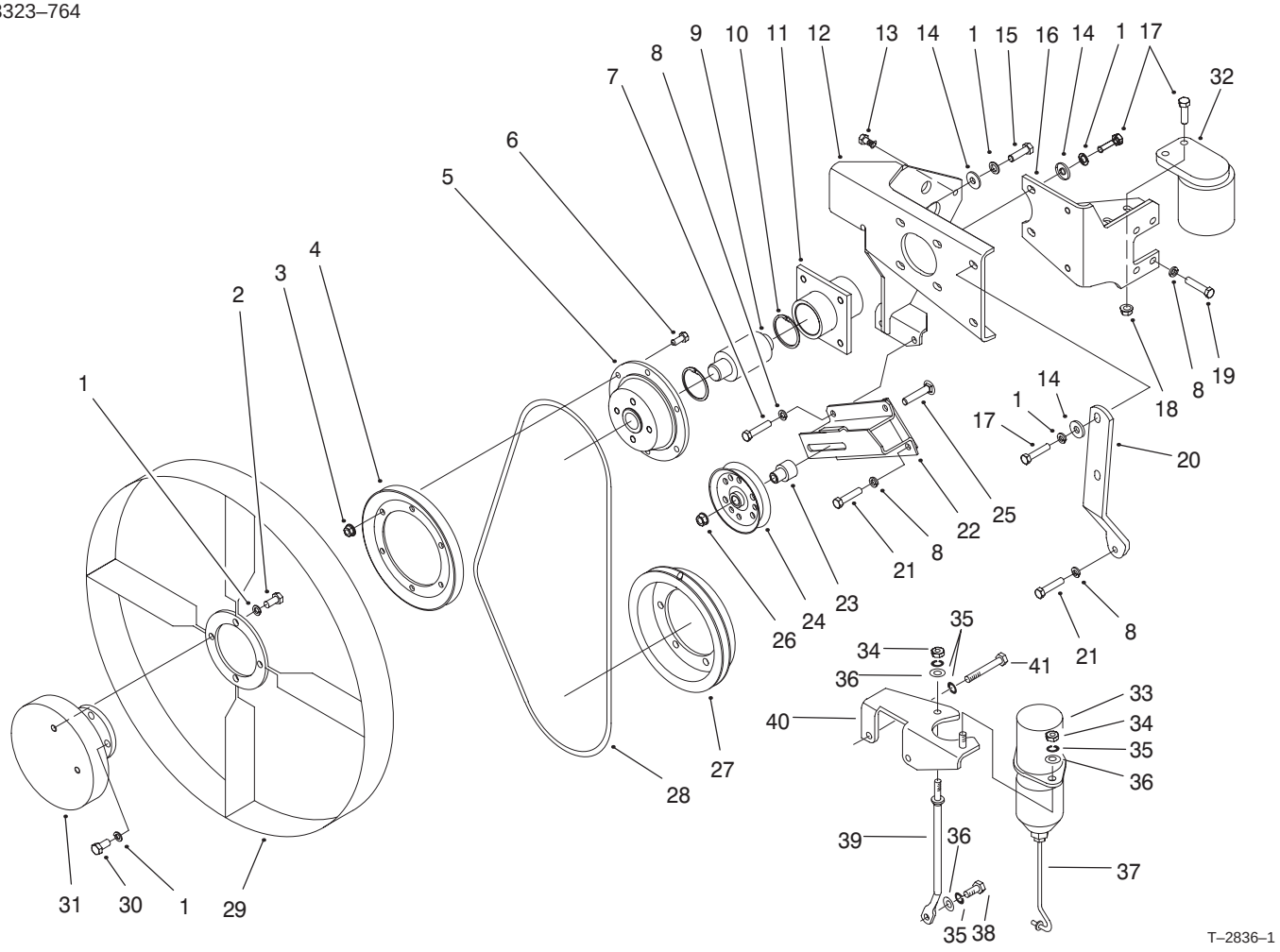

Fan Drive Assembly

Ref. No.	Part No.	Qty.	Description
1	3253–21	14	Washer–Lock
2	323–4	4	Screw–HH
3	32128–25	6	Nut–HHF
4	96–1267–03	1	Pulley–Fan
5	98–3008–03	1	Hub–Fan
6	322–3	6	Screw–HH
7	33114–070	1	Screw–HH
8	3253–4	7	Washer–Lock
9	98–0831	1	Bearing–Fan
10	32120–11	2	Ring–Retaining, Internal
11	95–6495–03	1	Bearing Housing ASM
12	98–7307–03	1	Fan Support ASM
13	33104–020	2	Screw–HHF
14	5–0838	6	Washer–Flat
15	323–6	2	Screw–HH
16	95–6480–03	1	Bracket ASM–
17	323–7	6	Screw–HH
18	3296–39	2	Nut–Lock
19	33114–045	4	Screw–HH
20	98–3013–03	1	Support–Fan
21	33114–060	2	Screw–HH
22	99–5915–01	1	Idler Bracket ASM
23	95–6497	1	Spacer
24	66–5310–03	1	Pulley–Idler
25	3231–6	1	Bolt–CARR

Ref. No.	Part No.	Qty.	Description
26	32128–21	1	Nut–HHF
27	95–6477–03	1	Pulley–Drive, Fan
28	98–9008	1	V–Belt
29	98–0809	1	Fan
30	323–5	4	Screw–HH
31	98–7321	1	Clutch–Fan, Modulating
32	70–5710	1	Filter–Fuel
33	99–1929	1	Solenoid ASM
34	33013–00	2	Nut
35	3253–3	5	Washer–Lock
36	33093–00	3	Washer–Flat
37	99–1930	1	Rod–Connecting
38	33103–016	1	Screw
39	99–1931	1	Rod–Support
40	99–1928	1	Bracket–Mounting
41	33103–050	2	Screw
*	98–7327	1	Run Solenoid ASM (Incl. Ref. #33–41)

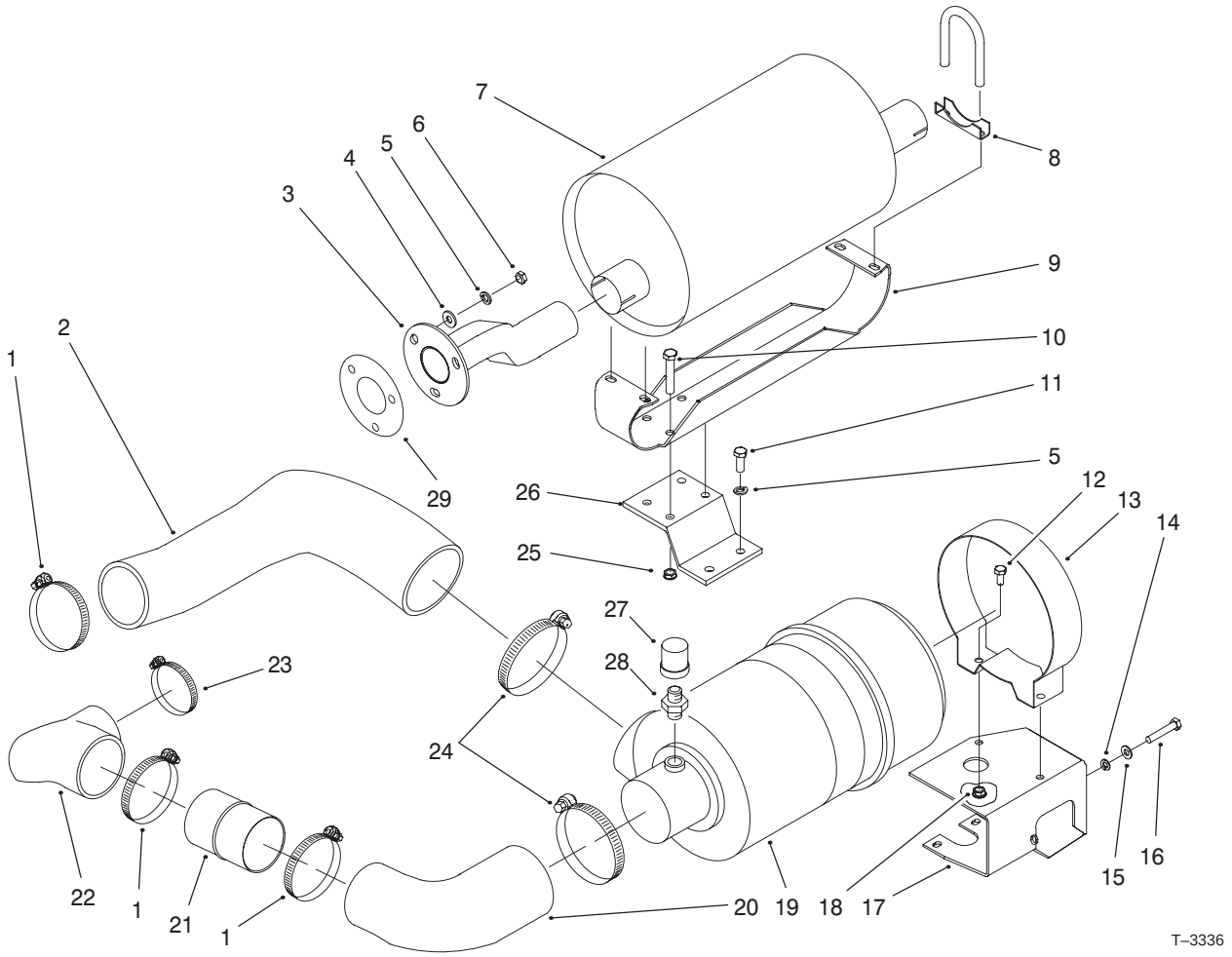

Muffler and Air Cleaner Assembly

Ref. No.	Part No.	Qty.	Description
1	2412–110	3	Clamp–Hose
2	95–6459	2	Hose–Inlet, Air
3	95–6474–03	1	Exhaust Tube ASM
4	3256–24	3	Washer–Flat
5	3253–6	5	Washer–Lock
6	69–9710	3	Nut–Lock
7	69–9420	7	Muffler–Exhaust
8	20–4840	2	Clamp–Muffler
9	99–8885–03	9	Bracket–Muffler
10	323–6	4	Screw–HH
11	33115–025	2	Screw–HH
12	322–3	2	Screw–HH
13	98–0833	1	Band–Cleaner, Air
14	3253–4	2	Washer–Lock
15	3256–23	4	Washer–Flat
16	33114–020	4	Screw–HH
17	95–6462–03	1	Bracket–Cleaner, Air
18	32128–25	2	Nut–HHF
19	98–0800	1	Air Cleaner ASM
20	95–6457	1	Hose–Outlet, Air
21	95–6461	1	Tube–Intake
22	95–6458	1	Hose–Outlet, Air
23	2412–42	1	Clamp–Hose
24	98–7347	2	Clamp–Hose
25	32128–21	4	Nut–HHF
26	100–6166–03	1	Bracket–Manifold

Ref. No.	Part No.	Qty.	Description
27	69–1940	1	Indicator–Electrical
28	94–1416	1	Adapter
29	99–2277	1	Gasket

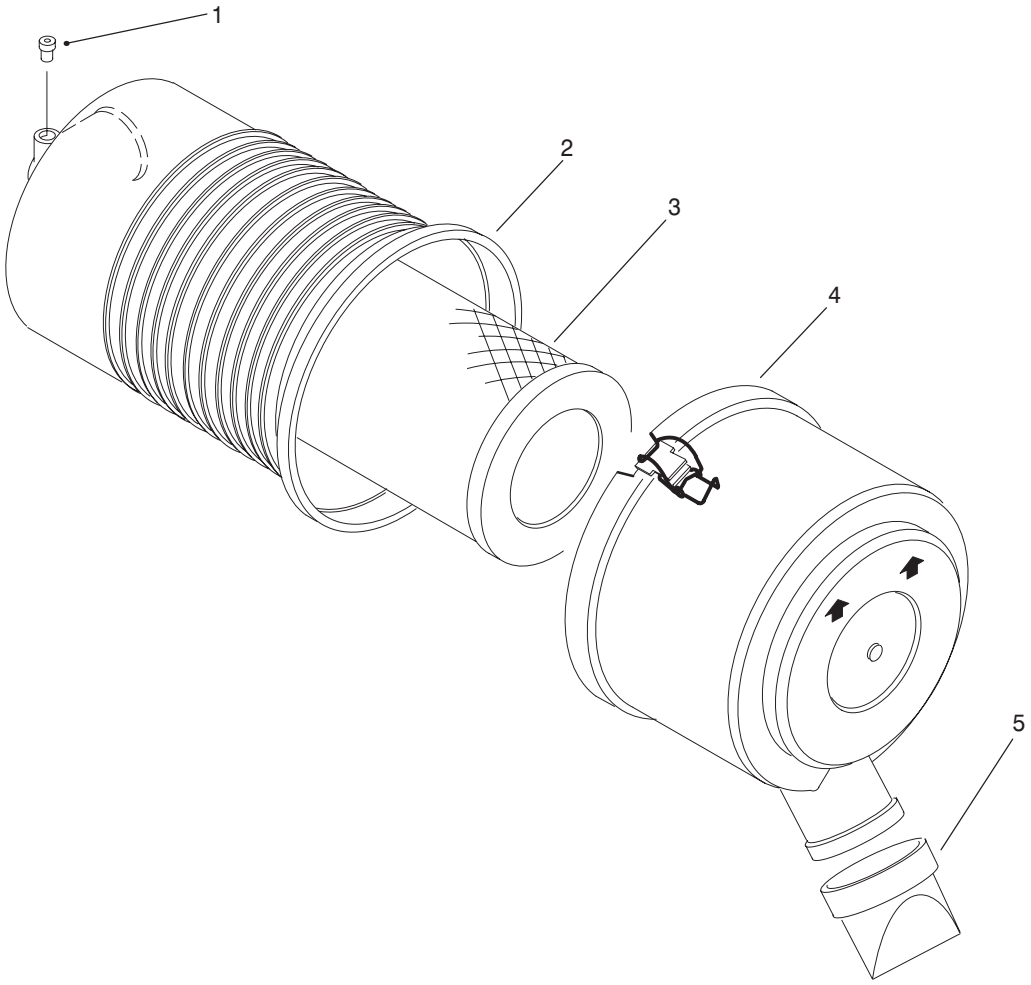

T–2252–1

Air Cleaner Assembly No. 98–0800

Ref. No.	Part No.	Qty.	Description
†1		1	Plug
†2		1	Body ASM
3	98–0801	1	Element ASM
4	98–0802	1	Cover ASM
5	98–0803	1	Valve

Ref. No.	Part No.	Qty.	Description

† Not Serviceable

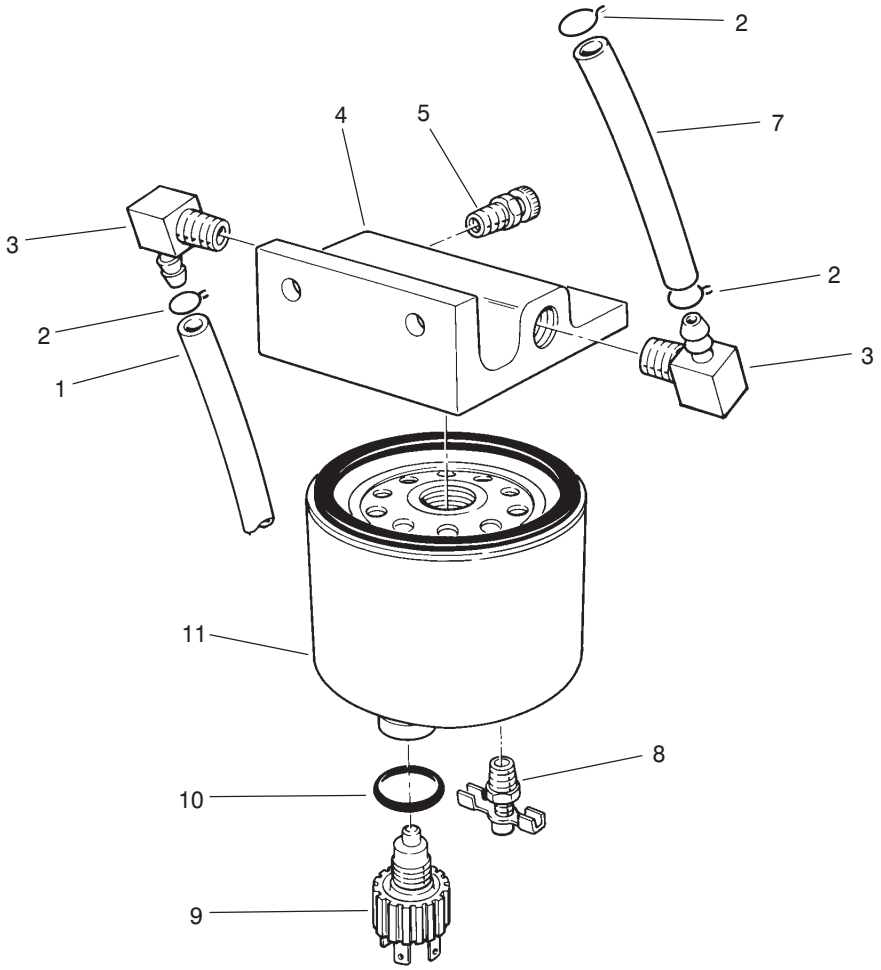

T–0376–1

Fuel/Water Filter Assembly

Ref. No.	Part No.	Qty.	Description
1	37–9560	1	Hose–Fuel
2	2412–108	3	Clamp–Hose
3	353–781	2	Fitting–Elbow, Fuel
4	63–8280	1	Head–Filter, Fuel (Incl. Ref. #5)
5	63–8290	1	Vent–Air
7	71–2690	1	Hose–Fuel
8	63–8310	1	Valve–Drain
9	69–1760	1	Sensor–Water
10	237–154	1	O–Ring
11	69–1770	1	Element–Spin–On (Incl. Ref. #6)
*	69–1750	1	Fuel Filter ASM (Incl. Ref. #4, 5 & 8–11)

Ref. No.	Part No.	Qty.	Description

* Not Illustrated

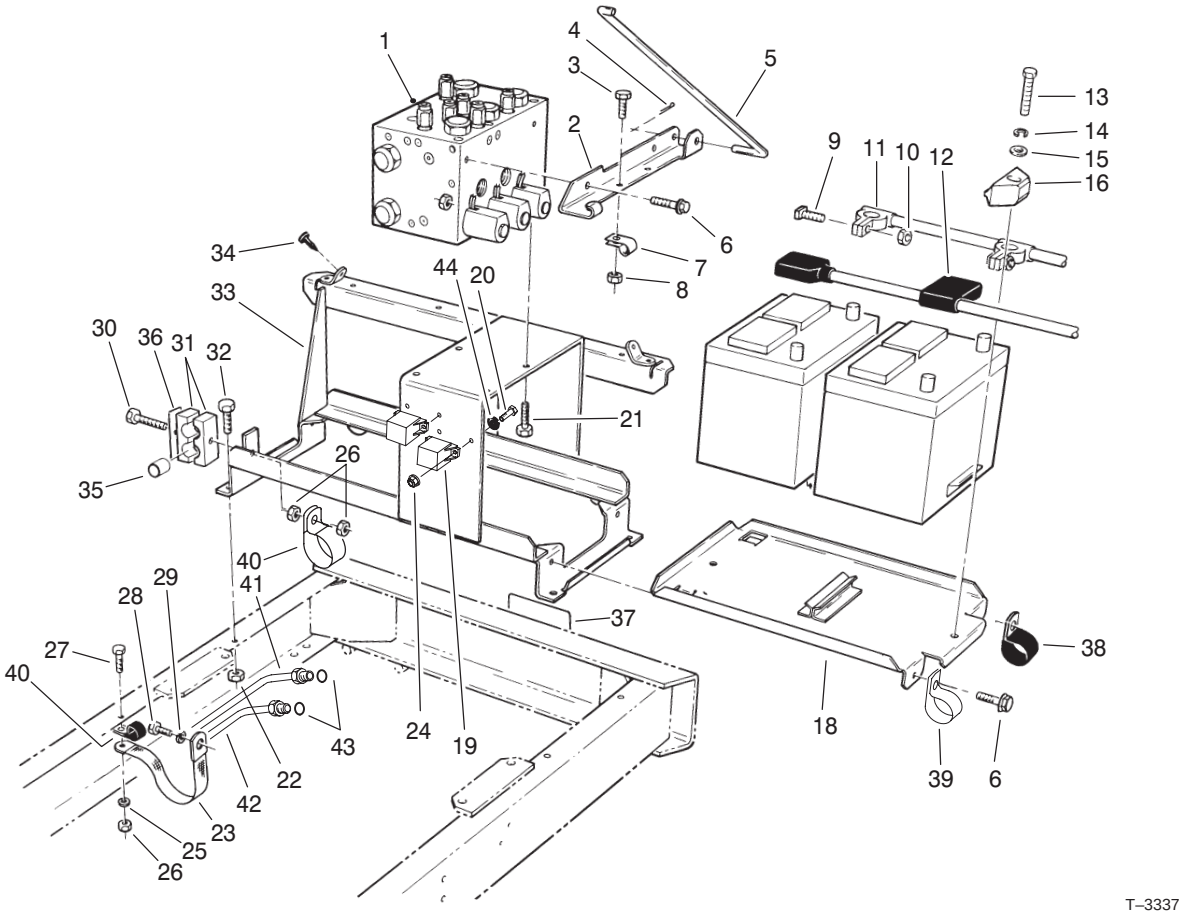

Battery Frame Assembly

Ref. No.	Part No.	Qty.	Description
1	95–5908	1	Manifold ASM (Power Take Off)
2	69–9350–03	1	Bracket–Rod, Hood Prop
3	321–3	3	Screw–HH
4	3272–6	1	Pin–Cotter
5	69–9120–03	1	Rod–Prop, Hood
6	3234–17	4	Screw–HFH
7	2412–73	3	Clamp–R
8	32149–2	3	Nut–Keps
†9		4	Bolt–Clamp
†10		4	Nut–Clamp
11	95–1839	1	Cable–Negative
12	98–7308	1	Cable–Positive
13	323–9	2	Screw–HH
14	3253–21	2	Washer–Lock
15	3256–24	2	Washer–Flat
16	66–2490	2	Hold–Down–Battery
‡17		2	Battery (Type 24, LTV)
18	80–0160–03	1	Tray–Battery
19	66–8800	2	Relay
20	3290–321	4	Screw–HH
21	323–4	4	Screw–HH
22	32152–2	4	Nut–Lock
23	18–2770	1	Strap–Ground
24	3296–2	4	Nut–Lock

Ref. No.	Part No.	Qty.	Description
25	3254–2	1	Washer–Lock
26	32152–1	3	Nut–Lock
27	322–5	1	Screw–HH
28	33116–020	1	Screw–HH
29	48–8070	1	Washer–Lock
30	322–11	1	Screw–HH
31	56–7974	2	Clamp–Lines, Hydraulic
32	323–6	4	Screw–HH
33	69–8290–03	1	Frame–Battery
34	237–37	4	Bumper–Rubber
35	23–7250	1	Spacer
36	69–9761	1	Plate–Clamp
37	72–4080	1	Decal–Danger
38	2412–41	1	Clamp
39	2412–39	1	Clamp
40	2412–104	2	Clamp–R
41	99–4965	1	Return Tube Front ASM
42	100–2516	1	Front Deck Pressure Tube ASM
43	237–58	2	O–Ring
44	3253–2	4	Washer–Lock

† Not Serviceable Separately
‡ Obtain Locally

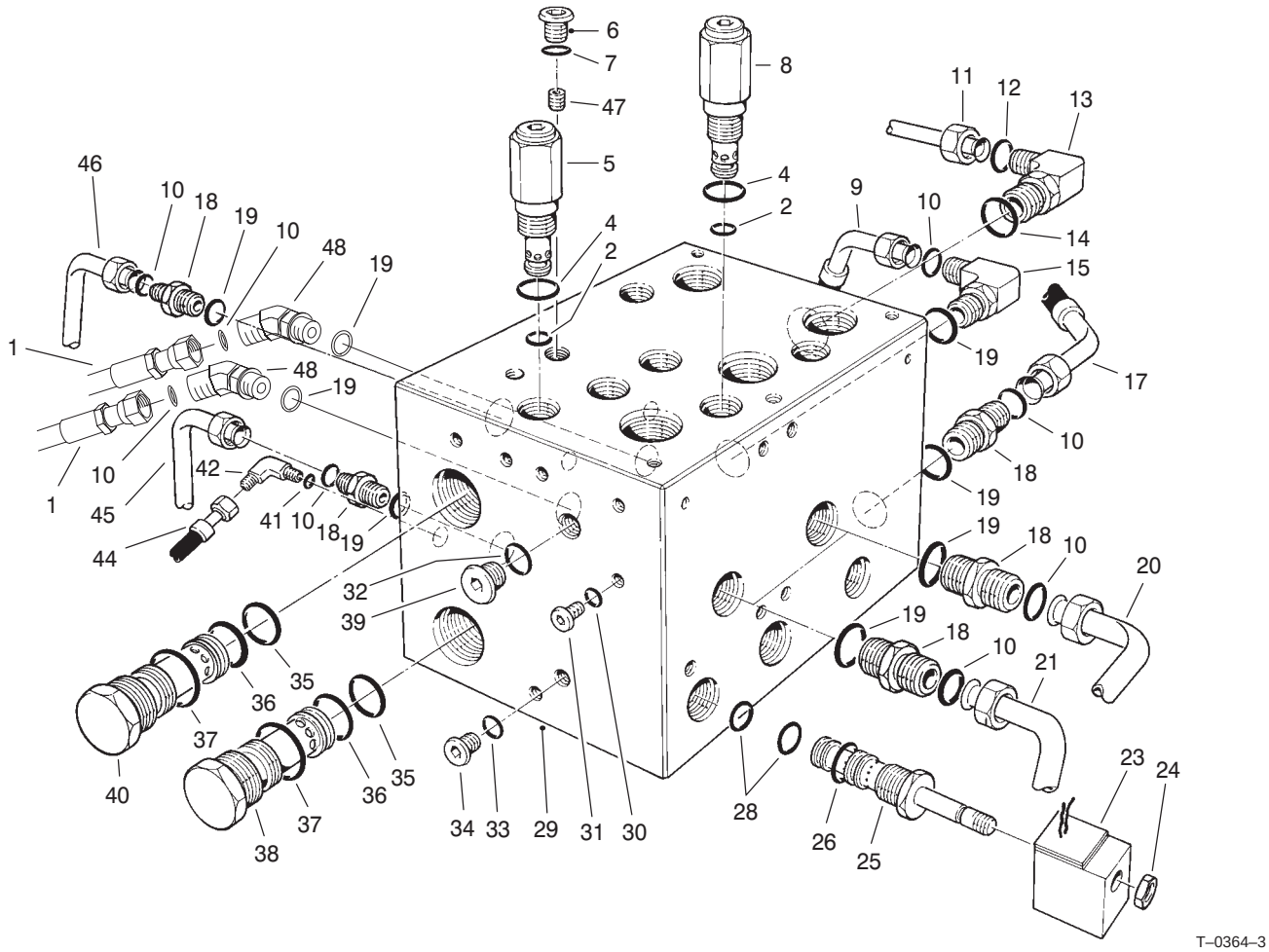

PTO Manifold Assembly

Ref. No.	Part No.	Qty.	Description
1	98–0655	2	Hose–Hydraulic
†2		6	O–Ring
†4		6	O–Ring
5	95–5640	3	Valve–Cartridge (600 lbs) (Incl. Ref. #2–4)
6	353–989	1	Plug (Incl. Ref. #7)
7	237–42	1	O–Ring
8	95–5635	3	Valve–Cartridge (3000 lbs) (Incl. Ref. #2–4)
9	69–5600	1	Hose–Hydraulic
10	237–58	8	O–Ring
11	69–6160	1	Tube–Hydraulic
12	340–65	2	O–Ring
13	340–129	1	Fitting–Hydraulic Elbow (Incl. Ref. #12 & 14)
14	237–146	1	O–Ring
15	340–142	1	Fitting–Elbow, Hydraulic (Incl. Ref. #10 & 16)
17	69–5610	1	Hose–Hydraulic
18	340–9	5	Fitting–Straight, Hydraulic (Incl. Ref. #10 & 19)
19	237–81	8	O–Ring
20	69–6180	1	Tube–Hydraulic
21	69–6170	1	Tube–Hydraulic

Ref. No.	Part No.	Qty.	Description
23	88–9190	3	Solenoid Coil ASM
24	3219–10	3	Nut–Jam
25	95–5639	3	Spool–Valve, Solenoid (Incl. Ref. #24, 26–28)
†26		3	O–Ring
†28		6	O–Ring
†29		1	Manifold–Take Off, Power
30	237–156	30	O–Ring
31	353–991	30	Plug (Incl. Ref. #30)
32	237–79	4	O–Ring
33	237–78	1	O–Ring
34	353–990	1	Plug (Incl. Ref. #33)
†35		6	O–Ring
†36		6	O–Ring
†37		6	O–Ring
38	95–5637	3	Valve–Cartridge (75 lbs) (Incl. Ref. #35–37)
39	353–988	4	Plug (Incl. Ref. #32)
40	95–5636	3	Valve–Cartridge (20 lbs) (Incl. Ref. #35–37)
41	237–78	2	O–Ring
42	353–431	2	Fitting–Hydraulic 45° (Incl. Ref. #41 & 43)
44	93–7423	2	Hose–Diagnostic
45	69–6140	1	Tube–Hydraulic

† Not Serviceable Separately

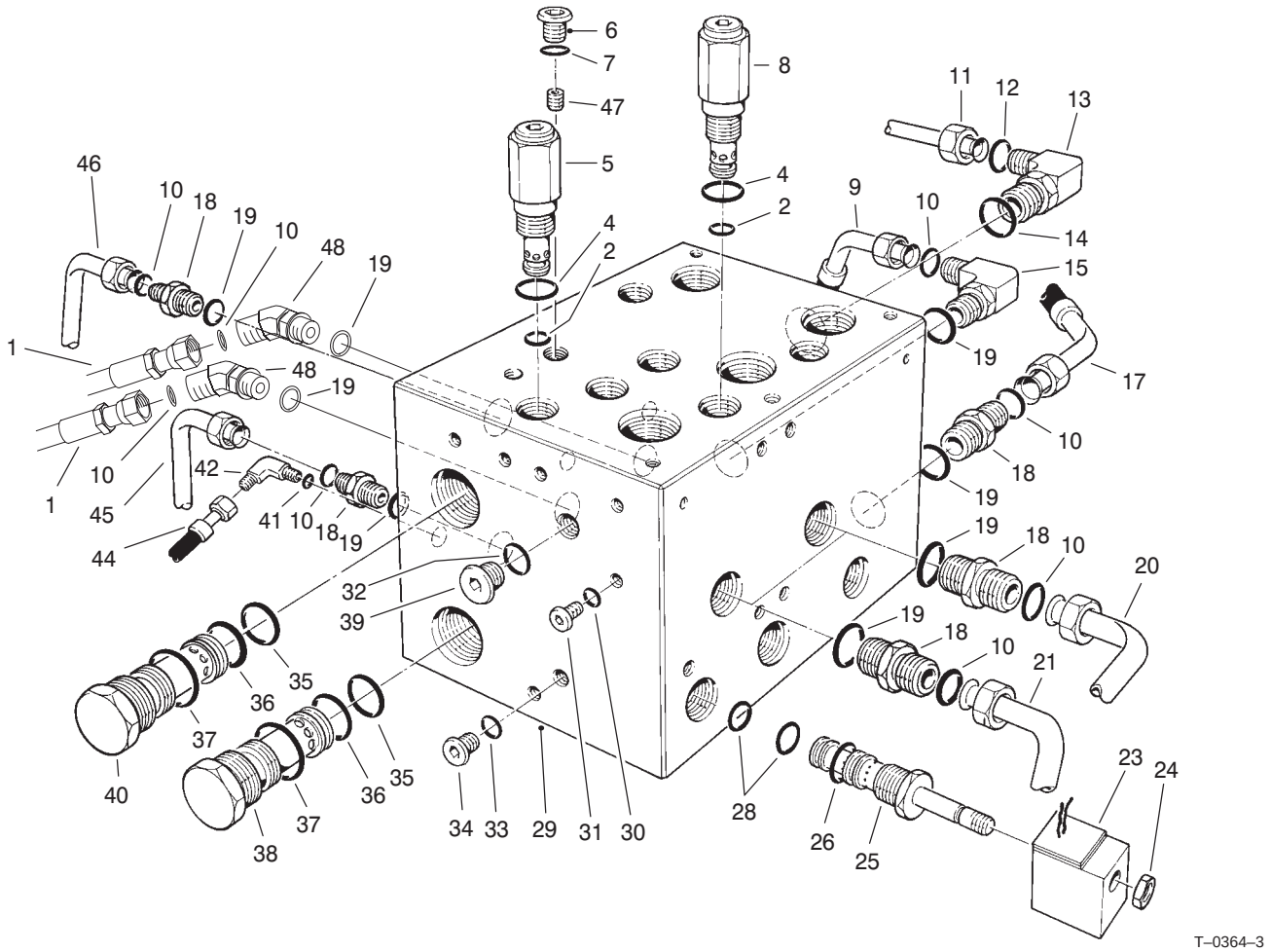

T–0364–3

PTO Manifold Assembly (Continued)

Ref. No.	Part No.	Qty.	Description
46	69–6150	1	Tube–Hydraulic
47	69–4220	1	Plug–Orifice
48	98–0657	2	Fitting–Hydraulic (Incl. Ref. #)
*	95–5645	6	Kit–Cartridge, Valve Seal (Incl. Ref. #2 & 4)
*	95–5644	6	Kit–Cartridge, Valve Seal (Incl. Ref.#35–37)
*	95–5643	3	Kit–Seal, Solenoid Valve (Incl. Ref.#26–28)
*	95–5908	1	Manifold ASM (Power Take Off) (Incl. Ref. #2, 4–8, 22–40 & 47)
‘			

Ref. No.	Part No.	Qty.	Description

* Not Illustrated

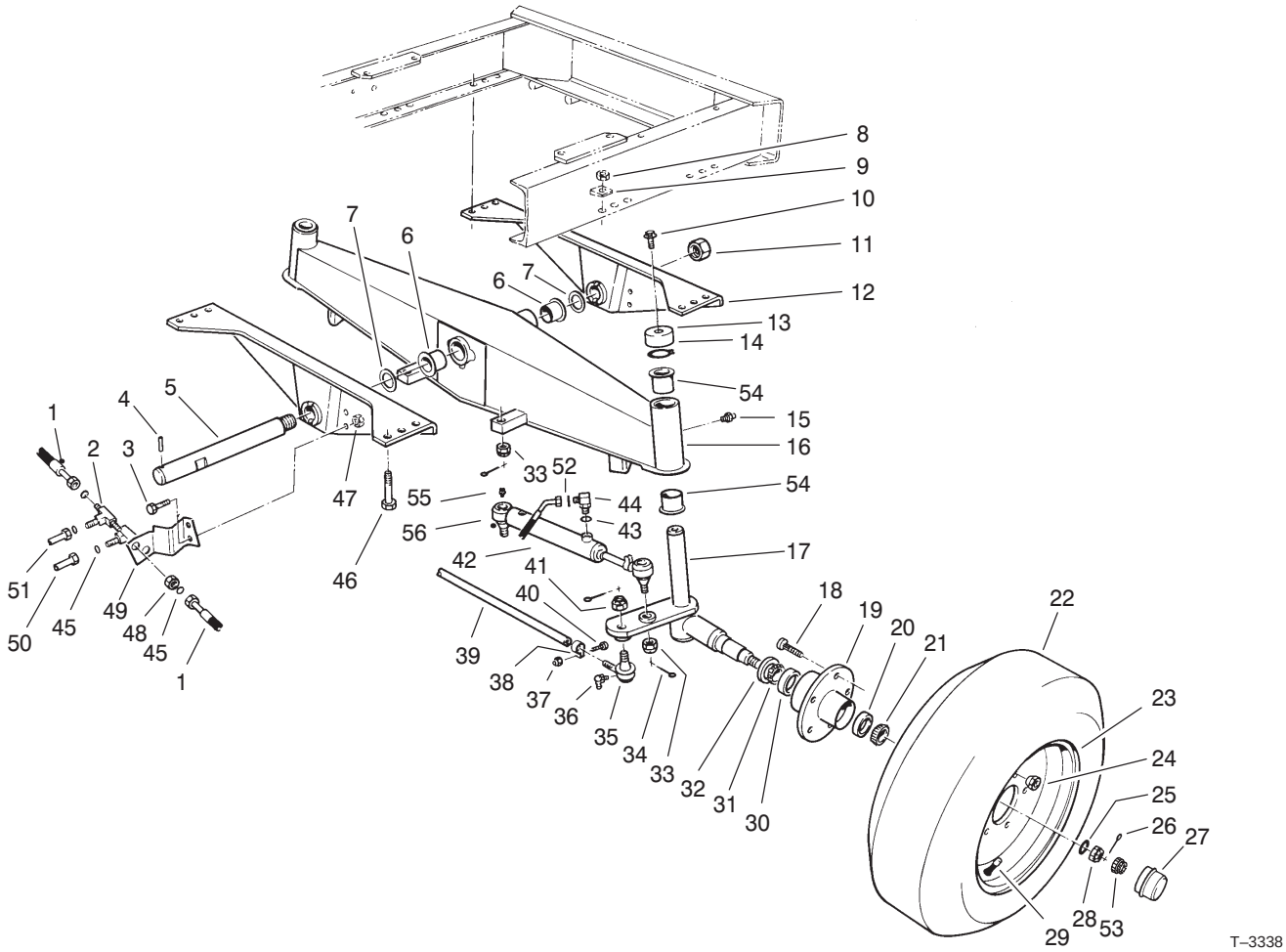

Rear Axle Assembly

Ref. No.	Part No.	Qty.	Description
1	69–5510	4	Hose–Hydraulic
2	340–68	2	Fitting–Hydraulic Bulkhead Tee (Incl. Ref. #45)
3	323–6	2	Screw–HH
4	32121–110	1	Pin–Roll
5	71–2590	1	Shaft–Pivot
6	69–6470	2	Bushing–Flange
7	256–304	2	Washer–Thrust
8	32128–23	12	Nut–Lock
9	3290–216	12	Washer–Bevel
10	3234–12	2	Screw–HFH
11	3296–68	1	Nut–Lock
12	69–7960–01	2	Support–Axle
13	100–3362	2	Cap–Spindle
14	100–4169	2	Ring–Retaining
15	302–5	3	Fitting–Grease
16	100–3364	1	Axle–Rear (Incl. Ref. #6 & 15)
17	100–3358	1	Spindle–Wheel, LH
*	100–3359	1	Spindle–Wheel, RH
18	69–2990	10	Screw–Drive
19	69–2960–01	2	Hub–Wheel, Rear (Incl. Ref.#18, 20 & 30)
20	254–72	2	Cup–Bearing, Outer
21	254–92	2	Cone–Bearing, Outer

Ref. No.	Part No.	Qty.	Description
22	69–9880	2	Tire
23	217–116	2	Rim
24	23–7270	10	Nut–Lug
25	93–0309	2	Washer
26	3272–13	2	Pin–Cotter
27	69–2970	2	Cap–Hub
28	3220–7	2	Nut–Jam
29	232–27	2	Stem–Valve
30	254–107	2	Cup–Bearing, Inner
31	254–106	2	Cone–Bearing, Inner
32	69–2980	2	Seal–Inner
33	32136–13	4	Nut–Castle
34	3272–12	6	Pin–Cotter
35	2116–4	1	Joint–Ball, RH
*	2116–3	1	Joint–Ball, LH
36	302–33	2	Fitting–Grease
†37		2	Nut–Lock
38	2412–7	2	Clamp ASM (Incl. Ref. #37 & 40)
39	3–3710–01	1	Tie Rod ASM (Incl. Ref. #35–41)
†40		2	Screw–HH
41	32136–2	2	Nut–Castle
42	98–0661	2	Hydraulic Cylinder ASM
43	237–78	4	O–Ring

* Not Illustrated
† Not Serviceable Separately

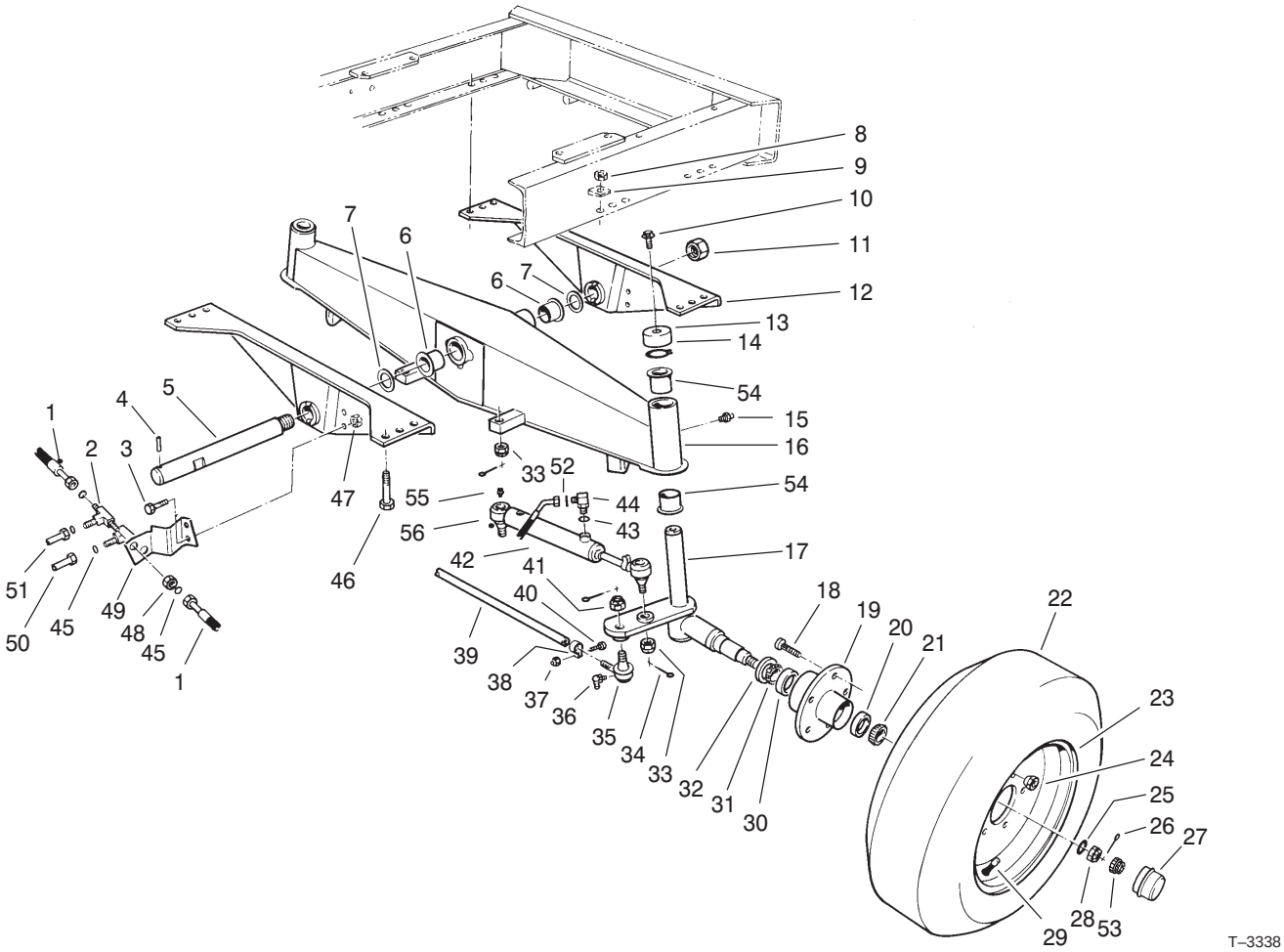

Rear Axle Assembly (Continued)

Ref. No.	Part No.	Qty.	Description
44	340–132	4	Fitting–Elbow, Hydraulic (Incl. Ref. #43 & 52)
45	237–22	6	O–Ring
46	325–6	12	Screw–HH
47	32152–2	2	Nut–Lock
48	340–70	2	Nut–Bulkhead
49	95–6487–03	1	Bracket–Support, Hose
50	69–6010	1	Tube–Hydraulic
51	69–6020	1	Tube–Hydraulic
52	237–21	4	O–Ring
53	93–0307	2	Nut–Retainer
54	100–2506	4	Bushing–Flange
55	302–5	1	Fitting–Grease
56	69–9810–03	1	Ball Joint ASM (Incl. Ref. #55)

Ref. No.	Part No.	Qty.	Description

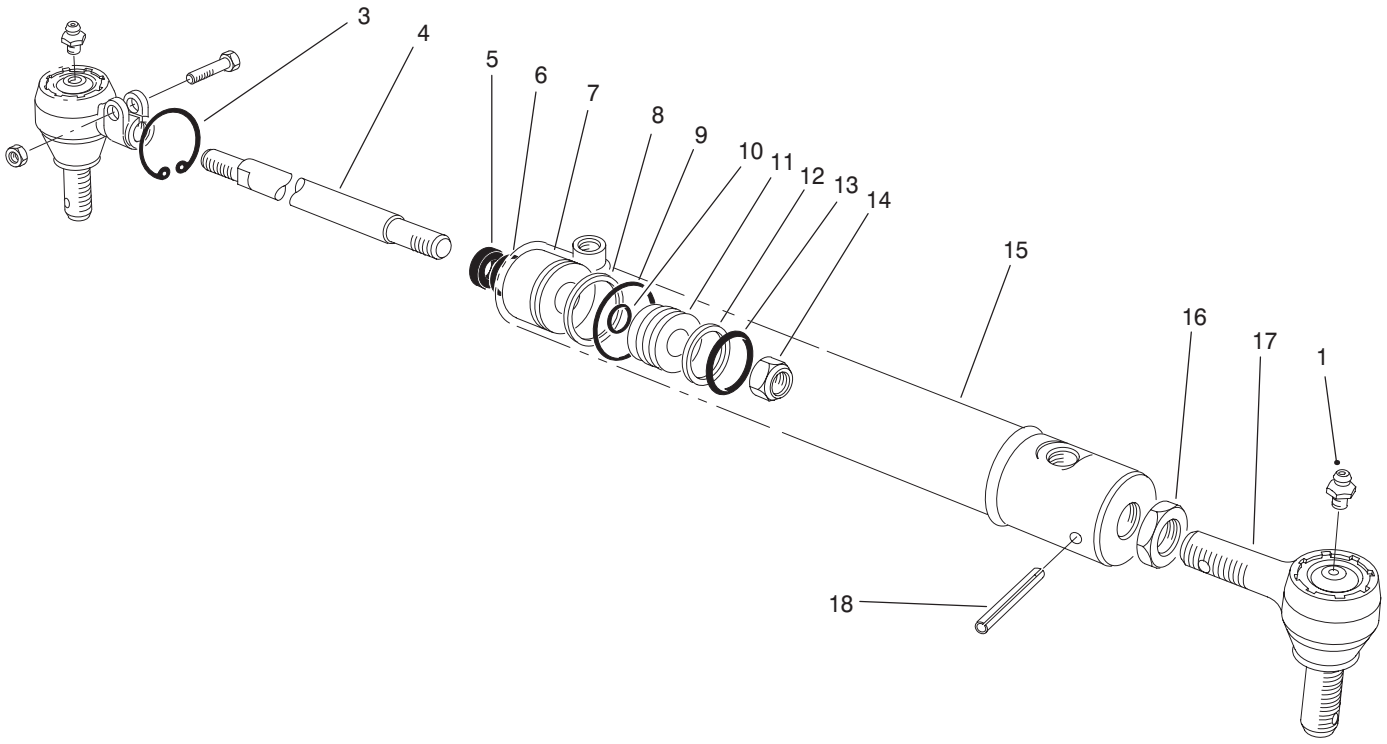

T–3339

Hydraulic Cylinder Assembly No. 98–0661

Ref. No.	Part No.	Qty.	Description
1	302–5	1	Fitting–Grease
3		1	Ring–Retaining
4	98–0666	1	Rod–Piston
5		1	Wiper–Rod
6		1	Seal–U–Cup
7	98–0664	1	Ring–Head
8		1	Ring–Back–Up
9		1	O–Ring
10		1	O–Ring
11	98–0665	1	Piston
12		1	Ring–Piston
13		1	O–Ring
14	43–5130	1	Nut–Lock
15		1	Barrel–Cylinder
16	69–1980	1	Nut–Jam
17	69–1970	1	Joint–Ball
18	32121–34	1	Pin–Roll
*	98–0667	1	Kit–Repair (Incl. Ref. #3, 5, 6, 8–10 & 12–13)
*	98–0661	2	Cylinder–Steering (Complete) (Incl. Ref. #3–18)

Ref. No.	Part No.	Qty.	Description

* Not Illustrated

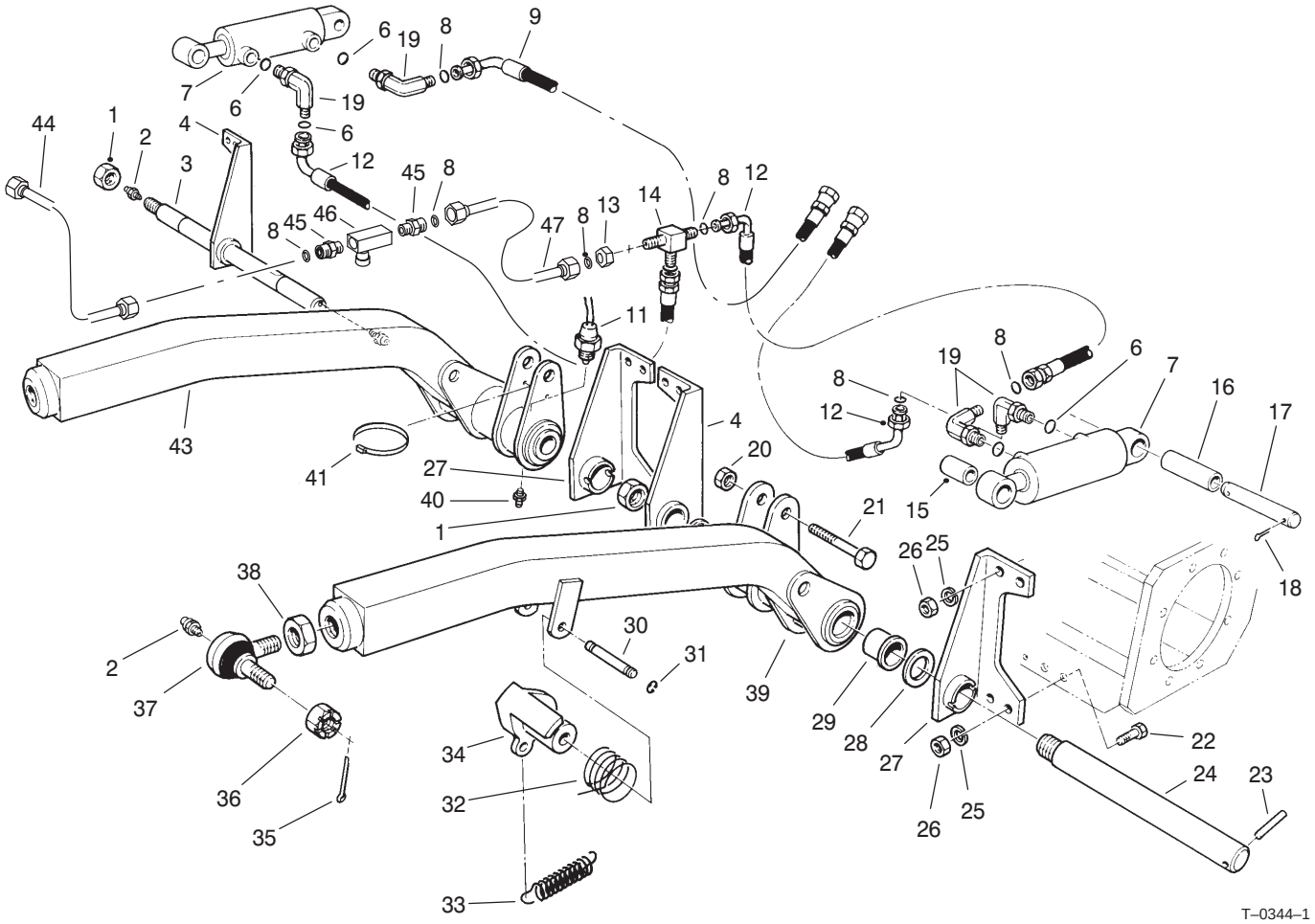

Front Lift Arm Assembly

Ref. No.	Part No.	Qty.	Description
1	3296–68	2	Nut–Lock
2	302–2	4	Fitting–Grease
3	71–2570	1	Shaft–Pivot
4	69–7940–01	2	Support–Lift Arm, RH
6	237–42	4	O–Ring
7	92–4971	2	Hyd. Cylinder ASM
8	237–22	9	O–Ring
9	69–8440	1	Hose–Hydraulic
11	72–4310	1	Switch–Ball
12	69–5440	3	Hose–Hydraulic
13	340–70	1	Nut–Bulkhead
14	340–68	1	Fitting–Hydraulic Bulk. Tee (Incl. Ref. #8)
15	98–7346	2	Tube–Bushing, Cylinder
16	20–4360–03	2	Tube–Spacer
17	69–9180	2	Pin–Cylinder
18	3272–23	4	Pin–Cotter
19	340–77	4	Fitting–Elbow, Hydraulic (Incl. Ref. #6 & 8)
20	32153–6	2	Nut–Lock
21	328–5	2	Screw–HH
22	325–6	12	Screw–HH
23	32121–110	2	Pin–Roll
24	71–2590	1	Shaft–Pivot

Ref. No.	Part No.	Qty.	Description
25	3253–7	16	Washer–Lock
26	3217–9	16	Nut–Hex
27	69–7920–01	2	Support–Lift Arm, LH
28	256–304	2	Washer–Thrust
29	69–6470	4	Bushing–Flange
30	92–4806	1	Pin–Latch
31	32120–47	2	Ring–Retaining
32	69–8470–03	1	Spring–Torsion
33	76–1670–03	1	Spring–Extension
34	69–1540–03	1	Pivot–Spring
35	3272–12	2	Pin–Cotter
36	32136–2	2	Nut–Slotted
37	86–8100–01	2	Joint–Ball (Incl. Ref. #2 & 36)
38	21–3000–01	2	Nut–Jam
39	69–9580	1	LH Front Lift Arm ASM (Incl. Ref. #29 & 40)
40	302–5	2	Fitting–Grease
41	3290–378	1	Tie–Cable
43	69–9570	1	RH Front Lift Arm ASM (Incl. Ref. #29 & 40)
44	93–7426	1	Tube–Hydraulic
45	340–57	2	Fitting–Straight, Hydraulic (Incl. Ref. #8)
46	93–1397	1	Valve–Control, Flow
47	93–7427	1	Tube–Hydraulic

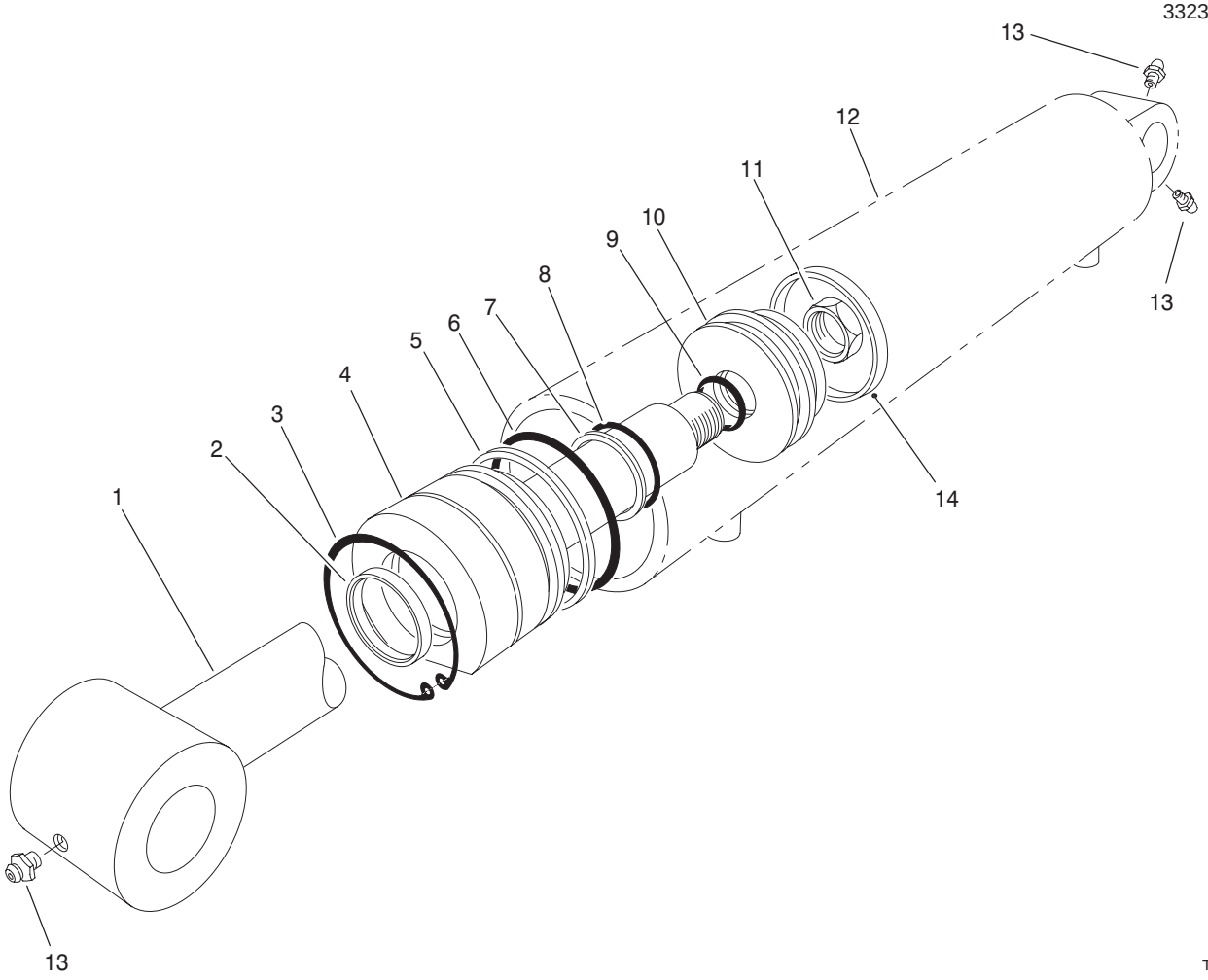

T–0380–1

Hydraulic Cylinder Assembly No. 92–4971

Ref. No.	Part No.	Qty.	Description
1	69–2580	1	Shaft w/Clevis
†2		1	Seal–Dust
3	61–4990	1	Ring–Retaining
4	69–2570	1	Head
†5		1	Ring–Back–Up
†6		1	O–Ring
†7		1	Ring–Back–Up
†8		1	O–Ring
†9		1	Uni–Ring
10	60–9770	1	Piston
11	60–9760	1	Nut–Lock
†12		1	Barrel
13	302–5	3	Fitting–Grease
14		1	Seal–Uni–Ring
*	86–7350	1	Kit–Repair, Seal (Incl. Ref. #2 & 5–9)

Ref. No.	Part No.	Qty.	Description

* Not Illustrated
† Not Serviceable Separately

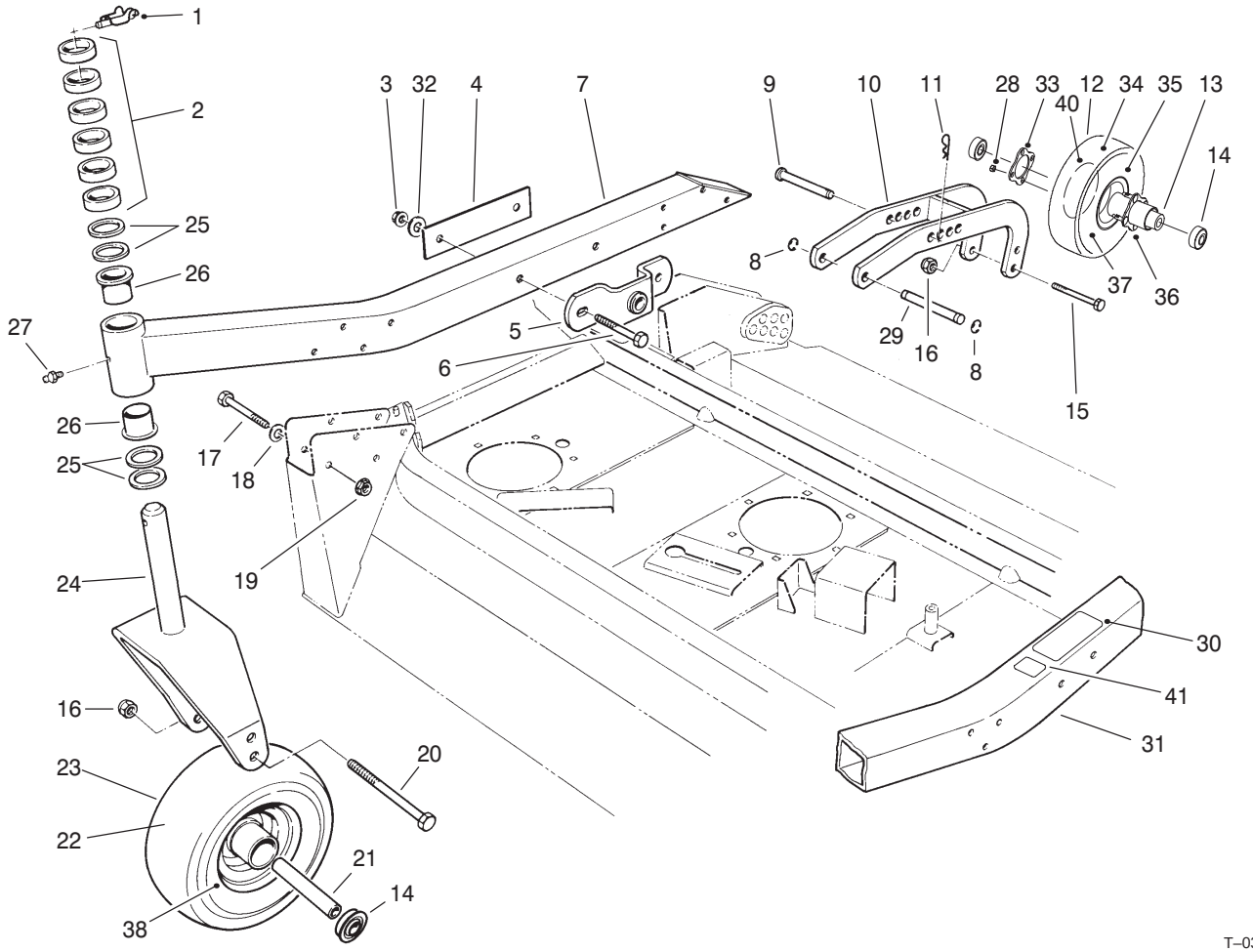

T–0362–4

Center Deck Model No. 30592
Carrier Frame Assembly

Ref. No.	Part No.	Qty.	Description
1	3290–384	2	Pin–Lynch
2	69–1510	12	Spacer–Caster
3	32128–23	4	Nut–HHF
4	69–8790–01	2	Plate–Reinforcing
5	69–7290–01	2	Mount–Joint, Ball
6	325–15	4	Screw–HH
7	69–8860	1	Arm–Castor, RH (Incl. Ref. #26–27)
8	32151–48	4	Ring–Retaining
9	283–70	2	Pin–Hitch (Incl. Ref. #11)
10	98–3047	2	Arm–Pivot
11	3290–343	2	Pin–Cotter, Hair
12	93–4240	2	10” Wheel–Pneumatic (Incl. Ref. #13–14, 28, 33–37, & 40)
13	93–4241	2	Spacer
14	93–4237	8	Bearing
15	327–24	2	Screw HH
16	3296–53	4	Nut–Lock
17	323–15	16	Screw–HH
18	5–0838	16	Washer–Flat
19	32128–43	16	Nut–HHF
20	327–25	2	Screw–HH

Ref. No.	Part No.	Qty.	Description
21	93–5630	2	Spacer–Bearing
22	98–7313	2	Tire–12”
23	98–7312	2	Wheel–Pneumatic, 12” (Incl. Ref. #14, 21–22 & 38)
24	98–7302–01	2	Fork–Castor
25	69–6860	8	Washer–Castor
26	69–6470	4	Bushing–Flange
27	302–5	2	Fitting–Grease
28	32128–16	8	Nut–HHF
29	69–9260	2	Pin–Clevis
30	95–0818	1	Decal–Torque
31	13–5069	1	Arm–Castor, LH (Incl. Ref. #26–27, & 30)
32	30–8770	4	Washer–Flat
33	93–4242	2	Plate
34	93–4243	2	Tire–10”
35	93–4239	4	Rim–Wheel
36	93–5980	2	Hub
37	93–4244	2	Tube–w/Valve
38	93–5631	2	Rim–Wheel
40	95–2741	2	Rim–Wheel
41	93–7252	1	Decal–CE

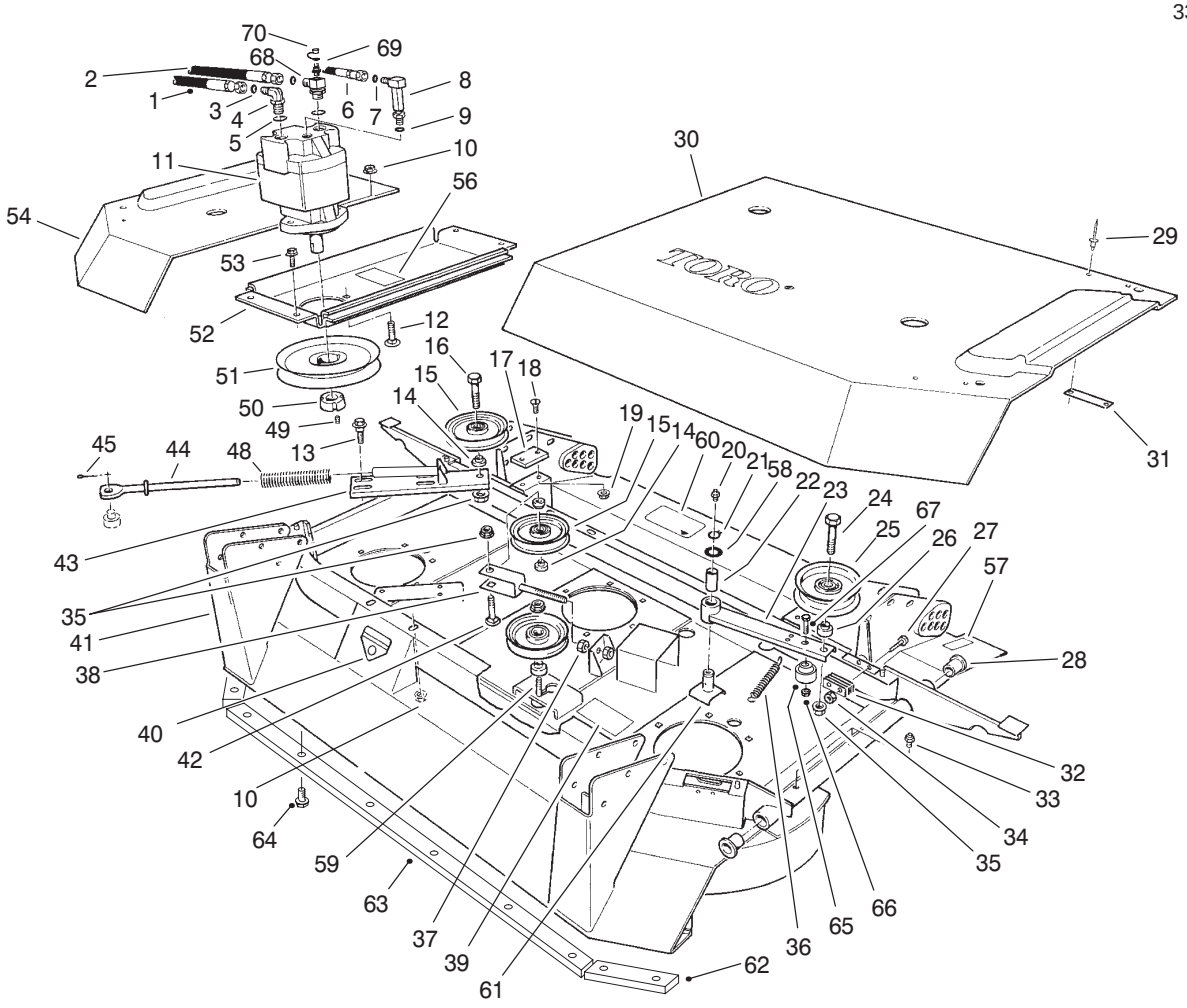

T–0361–5

Center Deck Model No. 30592

Ref. No.	Part No.	Qty.	Description
1	76–2760	1	Hydraulic Hose ASM
2	76–2750	1	Hydraulic Hose ASM
3	237–58	2	O–Ring
4	95–1692	1	Fitting–Elbow, Hydraulic (Incl. Ref #3 & 5)
5	237–81	2	O–Ring
6	76–2770	1	AHydraulic Hose ASM
7	237–22	1	O–Ring
8	69–4320	1	Fitting–Hydraulic, 90° (Incl. Ref. #7 & 9)
9	237–42	1	O–Ring
10	32128–21	6	Nut–HHF
11	94–4907	1	Motor–Hydraulic
12	3231–28	2	Bolt–CARR
13	19–1470	4	Bolt–Shoulder
14	69–6960	4	Spacer–Idler
15	63–1540–03	3	Pulley–Idler
16	325–7	1	Screw–HH
17	69–9290	2	Pad–Bumper
18	32108–103	4	Screw–FH
19	32128 –20	4	Nut–HHF
20	302–2	1	Fitting–Grease
21	32120–72	1	Ring–Retaining
22	256–188	1	Bushing–Sleeve
23	69–6610–01	1	Arm–Idler (Incl. Ref. # 22)
24	325–8	1	Screw–HH
25	69–5430–03	1	Pulley–Idler
26	69–6970	1	Spacer–Idler
27	32105–1	8	Screw–Machine
28	92–3162	4	Bushing–Flange
29	3269–25	8	Rivet–Pop
30	69–6780	1	Cover–Left, Center
31	69–6870	4	Plate–Magnet
32	69–6260	4	Magnet–Cover
33	302–5	4	Fitting–Grease
34	3296–2	8	Nut–Lock
35	32128–23	4	Nut–Flange, Lock
36	76–1670–03	1	Spring–Extension
37	3217–9	2	Nut–Jam
38	69–6550	1	Arm–Tension
39	95–0833	1	Decal–Routing, Belt
40	43–8480	1	Decal–Danger
41	13–4969	1	Deck–Center (Incl. Ref. #20, 28, 33, 39, 40 & 57)
42	3233–27	1	Bolt–CARR
43	98–0755–03	1	Plate–Tension
44	77–2830	1	Rod–Spring
45	3272–7	1	Pin–Cotter

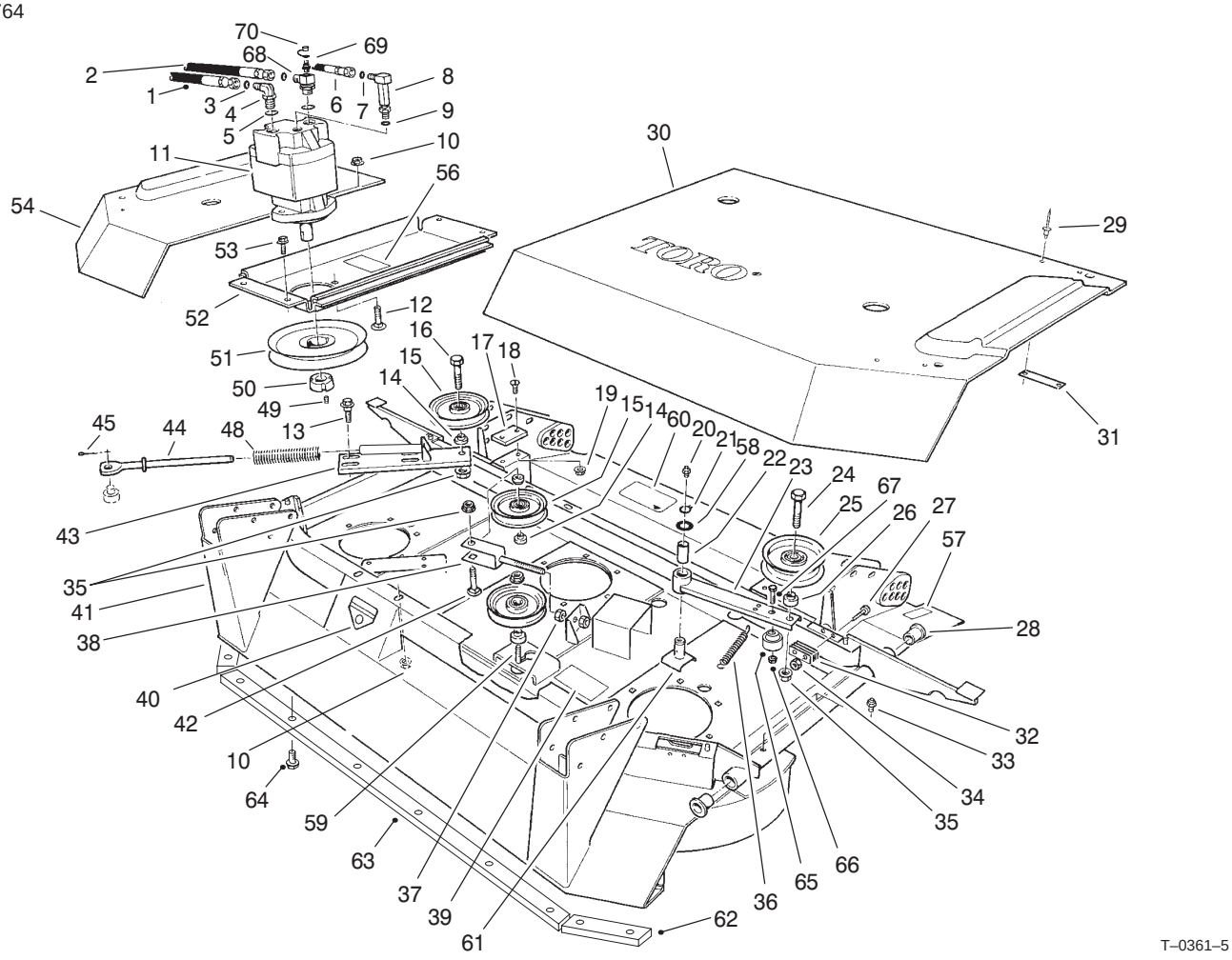

T–0361–5

Center Deck Model No. 30592 (Continued)

Ref. No.	Part No.	Qty.	Description
48	86–7480	1	Spring–Compression
49		2	Screw–Set
50	23–1640	1	Bushing–Lock, Taper (Incl. Ref. #49)
51	63–0660–03	1	Pulley–Drive
52	69–6390–01	1	Plate–Gearbox
53	3234–12	4	Screw–HFH
54	69–6790	1	Cover–Right, Center
56	95–0845	1	Decal–HOC
57	95–0817	1	Decal–HOC
58	3–6498	1	Washer–Flat
59	3233–30	1	Bolt–CARR
60	66–1340	1	Decal–Danger
60	93–7824	1	Decal–Danger (Europe)
61	93–9324	1	Pivot–Idler
62	94–9820	2	Bar–Guard, Front RH & LH (Europe)
63	94–9819	1	Bar–Guard, Front Center (Europe)
64	32104–31	10	Screw–HW (Europe)
65	98–3038	1	Bushing–Idler
66	32149–1	1	Nut–Keps
67	322–6	1	Screw–HH
68	99–4444	1	Fitting
69	99–4443	1	Fitting

Ref. No.	Part No.	Qty.	Description
70	354–79	1	Cap–Dust
*	93–8457	1	Belt–Drive, Hex Deck
*	3290–378	2	Tie–Cable

* Not Illustrated

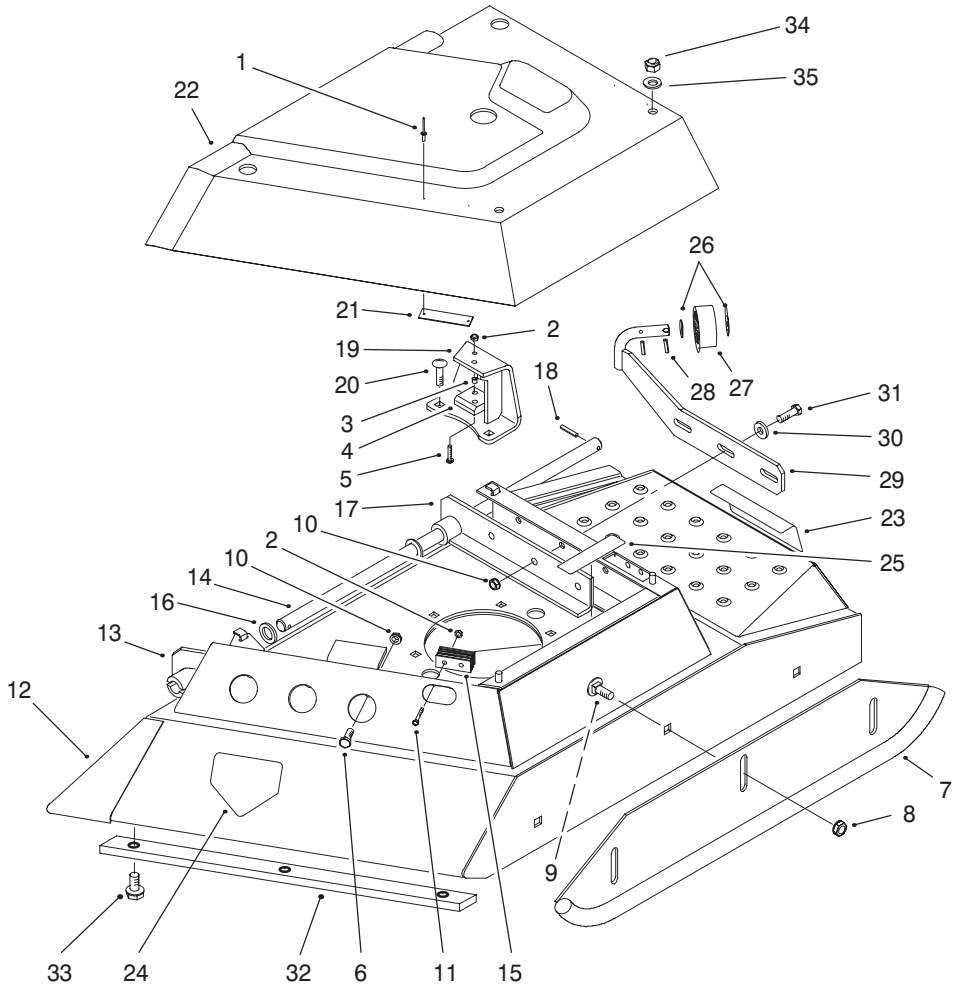

T–0366–3

Left Wing Deck Model No. 30591

Ref. No.	Part No.	Qty.	Description
1	3269–25	4	Rivet–Pop
2	3296–2	6	Nut–Lock
3	40–9520	2	Spacer–Split
4	40–0330	1	Cushion–Rubber
5	32122–28	2	Screw–Head, Truss
6	323–6	3	Screw–HH
7	69–6730–01	1	Skid
8	32128–23	3	Nut–Flange Lock
9	3233–9	3	Bolt–CARR
10	32128–21	6	Nut–HHF
11	32105–1	4	Screw–Machine
12	13–4989	1	Deck–Wing, Left (Incl. Ref. #23–25)
13	69–6640–01	1	Hinge–Front, Left
14	69–6900	1	Shaft–Hinge
15	69–6260	2	Magnet–Cover
16	95–3297	2	Washer–Thrust
17	69–6670–01	1	Hinge–Rear, Left
18	32121–6	2	Pin–Roll
19	94–6760–01	1	Bracket–Support
20	3231–25	2	Bolt–CARR
21	69–6870	2	Plate–Magnet
22	69–6850	1	Cover–Wing, Left
23	66–1340	1	Decal–Danger
23	93–7824	1	Decal–Danger (Europe)

Ref. No.	Part No.	Qty.	Description
24	43–8480	1	Decal–Danger
24	93–7815	1	Decal–Danger (Europe)
25	67–5360	1	Decal–Danger
25	93–7273	1	Decal–Danger (Europe)
26	3256–69	2	Washer
27	82–4910	1	Roller
28	32121–4	2	Pin–Roll
29	88–9270–01	1	Bracket–Roller, LH
30	5–0838	3	Washer–Flat
31	323–7	3	Screw–HH
32	94–9824	1	Bar–Guard, LH Front Wing (Europe)
33	32104–31	3	Screw–HH (Europe)
34	3296–29	2	Nut–Lock
35	3256–23	2	Washer–Flat
*	99–2318	1	V–Belt
*	42–6200	A/R	Shim–Cushion

* Not Illustrated

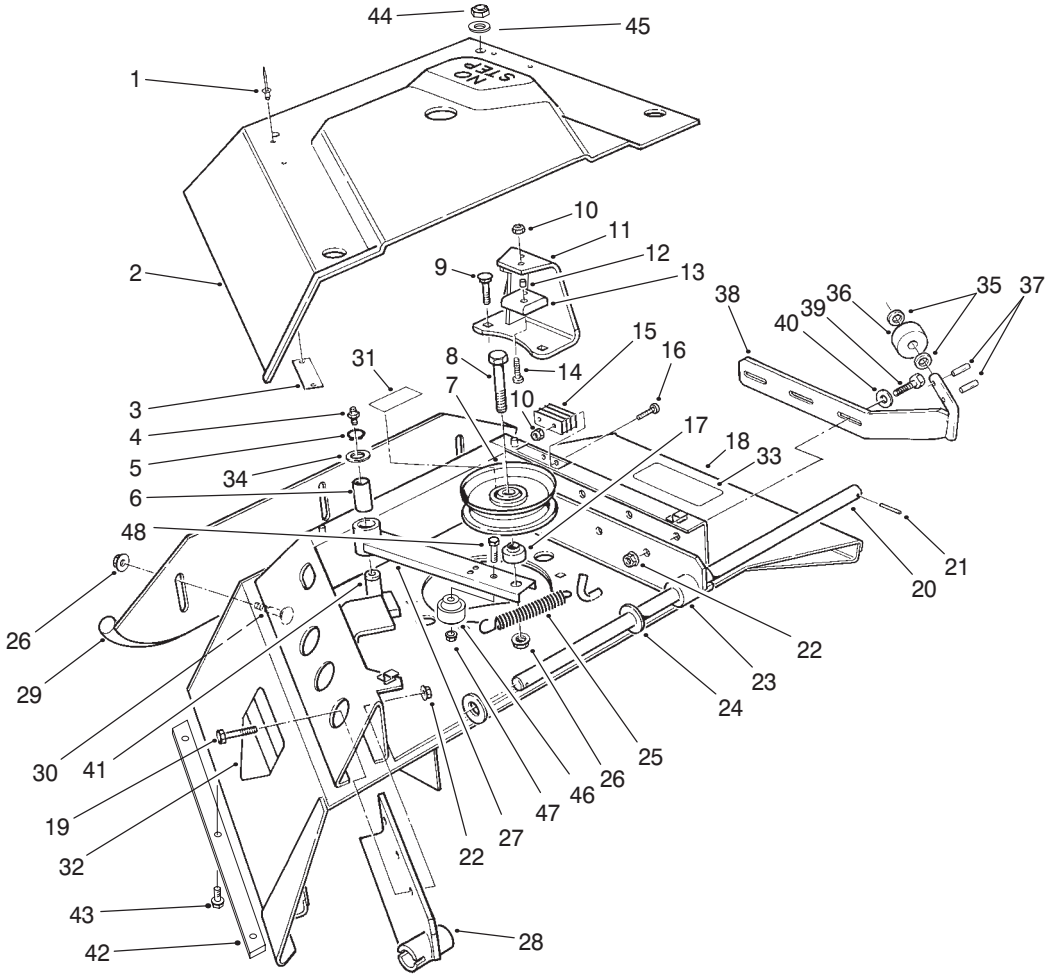

T–0365–4

Right Wing Deck Model No. 30593

Ref. No.	Part No.	Qty.	Description
1	3269–25	4	Rivet–Pop
2	69–6840	1	Cover–Wing, Right
3	69–6870	2	Plate–Magnet
4	302–2	1	Fitting–Grease
5	32120–72	1	Ring–Retaining
6	256–188	1	Bushing–Sleeve
7	69–5430–03	1	Pulley–Idler
8	325–8	1	Screw–HH
9	3231–25	2	Bolt–CARR
10	3296–2	6	Nut–Lock
11	94–6762–01	1	Bracket–Support
12	40–9520	2	Spacer–Split
13	40–0330	1	Cushion–Rubber
14	32122–28	2	Screw–Head, Truss
15	69–6260	2	Magnet–Cover
16	32105–1	4	Screw–Machine
17	69–6970	1	Spacer–Idler
18	13–4979	1	Right Wing Deck ASM (Incl. Ref. #4, 32 & 33)
19	323–6	3	Screw–HH
20	69–6900	1	Shaft–Hinge
21	32121–6	2	Pin–Roll
22	32128–21	6	Nut–HHF
23	69–6710–01	1	Hinge–Rear, Right
24	95–3297	2	Washer–Thrust
25	76–1670–03	1	Spring–Extension

Ref. No.	Part No.	Qty.	Description
26	32128–23	4	Nut–HHF
27	69–6610–01	1	Idler Arm ASM (Incl. Ref. #6)
28	69–6690–01	1	Hinge–Front, Right
29	69–6730–01	1	Skid
30	3233–9	3	Bolt–CARR
31	67–5360	1	Decal–Danger
31	93–7273	1	Decal–Danger (Europe)
32	43–8480	1	Decal–Danger
32	93–7815	1	Decal–Danger (Europe)
33	66–1340	1	Decal–Danger
33	93–7824	1	Decal–Danger (Europe)
34	3–6498	1	Washer
35	3256–69	2	Washer
36	82–4910	1	Roller
37	32121–4	2	Pin–Roll
38	88–9260–01	1	Bracket–Roller, RH
39	323–7	3	Screw–HH
40	5–0838	3	Washer–Flat
41	93–9324	1	Pivot–Idler
42	94–9821	1	Bar–Guard, Front Wing RH (Europe)
43	32104–31	3	Screw–HH (Europe)

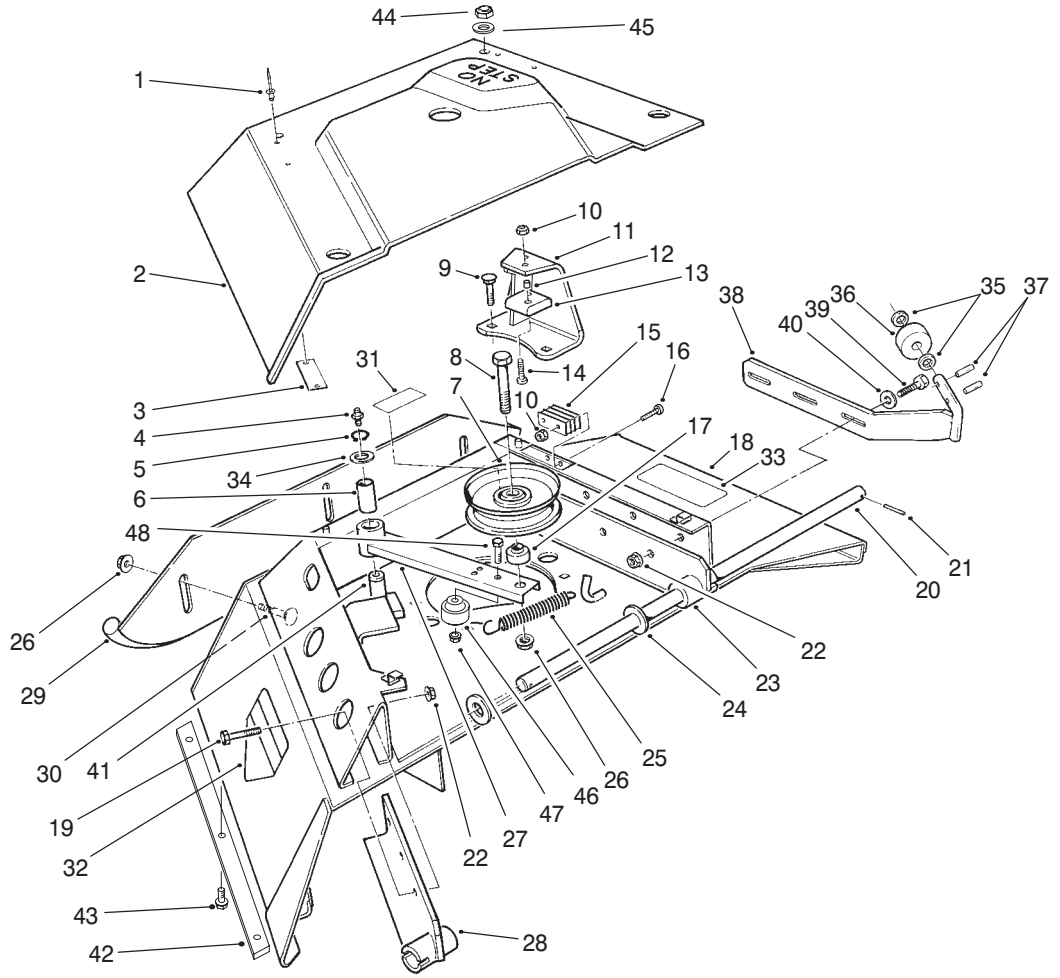

T–0365–4

Center Deck Model No. 30592 Right Wing Assembly (Continued)

Ref. No.	Part No.	Qty.	Description
44	3296–29	2	Nut–Lock
45	3256–23	2	Washer–Flat
46	98–3038	1	Bushing–Idler
47	32149–1	1	Nut–Keps
48	322–6	1	Screw–HH
*	99–2318	1	V–Belt
*	42–6200	A/R	Shim–Cushion

Ref. No.	Part No.	Qty.	Description

* Not Illustrated

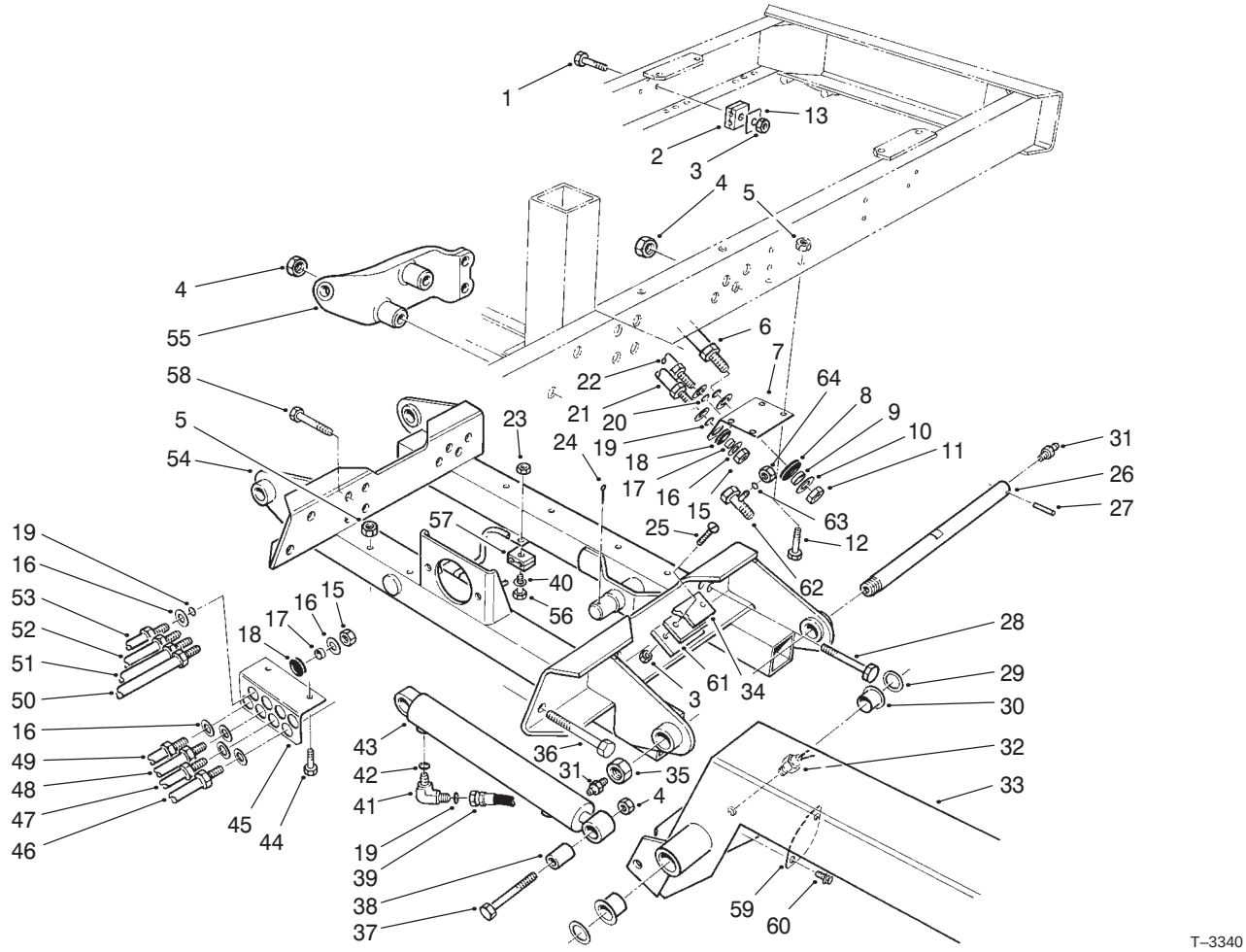

Wing Deck Lift Assembly

Ref. No.	Part No.	Qty.	Description
1	322–11	1	Screw–HH
2	56–7974	2	Clamp Half–Hydraulic Line
3	32152–1	5	Nut–Lock
4	32153–6	22	Nut–Lock
5	32152–2	6	Nut–Lock
6	69–6170	1	Tube–Hydraulic, LH (Incl. Ref. #20)
*	69–6140	1	Tube–Hydraulic, RH (Incl. Ref. # 20)
7	69–9450–03	1	Bracket–Wing Hose, LH
*	69–9460–03	1	Bracket–Wing Hose, RH
8	240–3	4	Grommet
9	69–9000	4	Spacer
10	69–9010	8	Washer
11	340–74	4	Nut–Bulkhead
12	323–6	4	Screw–HH
13	69–9761	1	Plate–Cover
15	340–70	10	Nut–Bulkhead
16	69–8940	20	Washer
17	69–8970	10	Spacer
18	240–4	10	Grommet
19	237–22	14	O–Ring
20	237–65	4	O–Ring

Ref. No.	Part No.	Qty.	Description
21	69–5980	1	Tube–Hydraulic, LH (Incl. Ref. #19)
*	69–5970	1	Tube–Hydraulic, RH (Incl. Ref #19)
22	69–6180	1	Tube–Hydraulic, LH (Incl. Ref. #20)
*	69–6150	1	Tube–Hydraulic, RH (Incl. Ref. #20)
23	32152–4	3	Nut Lock
24	3272–33	2	Pin–Cotter
25	32108–103	4	Screw–Machine, FH
26	99–5917	2	Shaft–Pivot, Lift Arm
27	32121–110	2	Pin–Roll
28	328–26	12	Screw–HH
29	256–304	4	Washer–Thrust
30	69–6470	4	Bushing–Flange
31	302–2	4	Fitting –Grease
32	72–4310	2	Switch–Lift
33	93–9926–01	1	LH Lift Arm ASM (Incl. Ref. #30–31)
*	93–9925–01	1	RH Lift Arm ASM (Incl. Ref. #30–31)
34	69–9300	2	Cushion–Rubber
35	3296–68	2	Nut Lock
36	328–8	4	Screw–HH
37	328–8	2	Screw–HH

* Not Illustrated

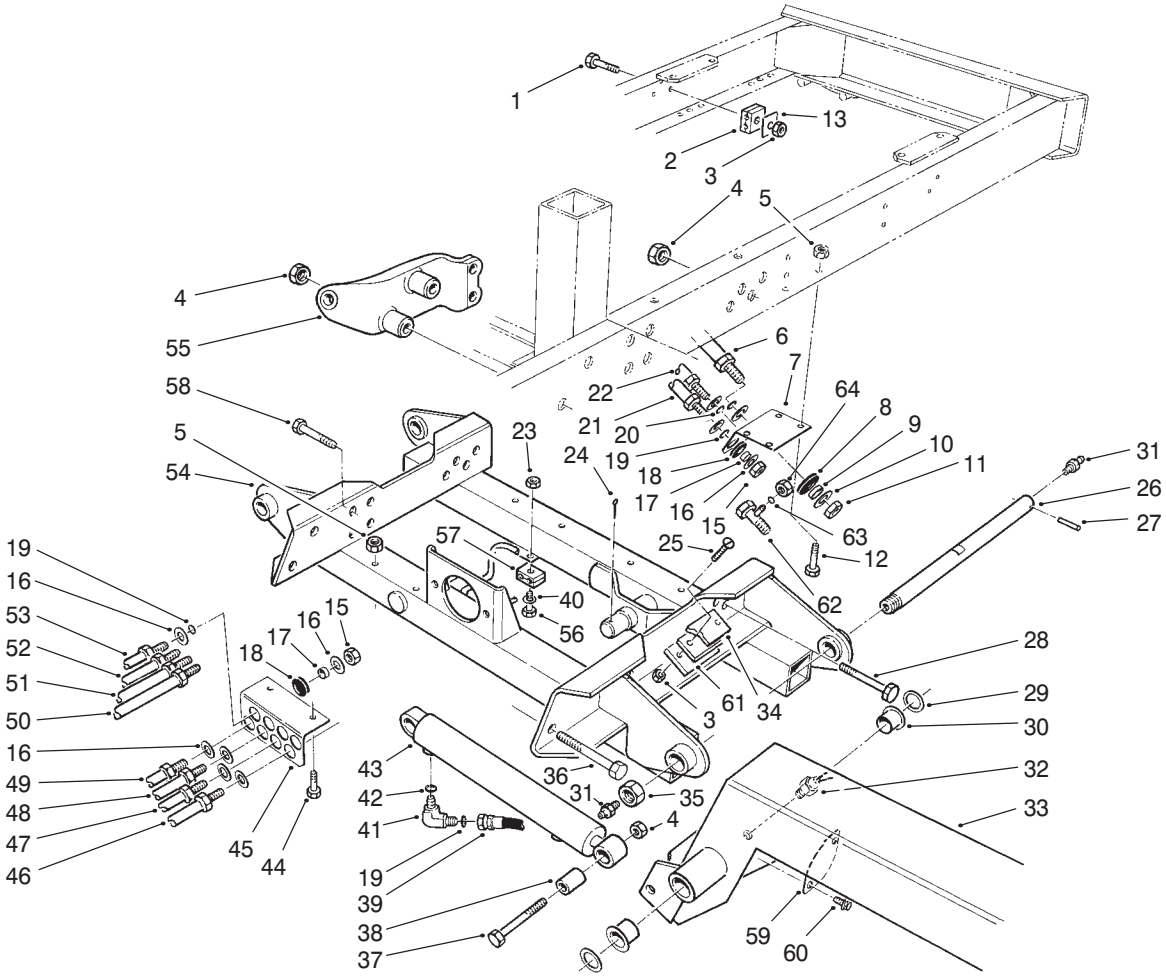

T–3340

Wing Deck Lift Assembly (Continued)

Ref. No.	Part No.	Qty.	Description
38	69–9190	2	Bushing–Cylinder
39	69–5490	4	Hose–Cylinder
40	3256–56	3	Washer–Flat
41	340–77	4	Fitting–Elbow, Hydraulic (Incl. Ref. #19 & 42)
42	237–42	4	O–Ring
43	74–2170	2	Cylinder–Lift
44	323–15	2	Screw–HH
45	74–2680–03	1	Bracket–Bulkhead
46	69–6030	1	Tube–Hydraulic (Incl. Ref. #19)
47	69–6060	1	Tube–Hydraulic (Incl. Ref. #19)
48	69–6070	1	Tube–Hydraulic (Incl. Ref. #19)
49	69–6000	1	Tube–Hydraulic (Incl. Ref. #19)
50	69–6040	1	Tube–Hydraulic (Incl. Ref. #19)
51	69–6050	1	Tube–Hydraulic (Incl. Ref. #19)
52	69–6080	1	Tube–Hydraulic (Incl. Ref. #19)
53	69–5990	1	Tube–Hydraulic (Incl. Ref. #19)

Ref. No.	Part No.	Qty.	Description
54	69–4400–01	1	Carrier–Deck, Wing
55	69–1580–03	1	Anchor–Latch, LH
*	69–1600–03	1	Anchor–Latch, RH
56	321–9	3	Screw–HH
57	56–7973	6	Clamp Half–Hydraulic Line
58	328–24	4	Screw–HH
59	39–7650–01	2	Plate–Cover
60	32144–11	4	Screw–Forming, Thread
61	93–9922	2	Spacer
*	3290–378	3	Tie–Cable
62	340–115	2	Fitting–Tee (Incl. Ref. # 63)
63	237–22	2	O–ring
64	340–117	2	Fitting–Cap

* Not Illustrated

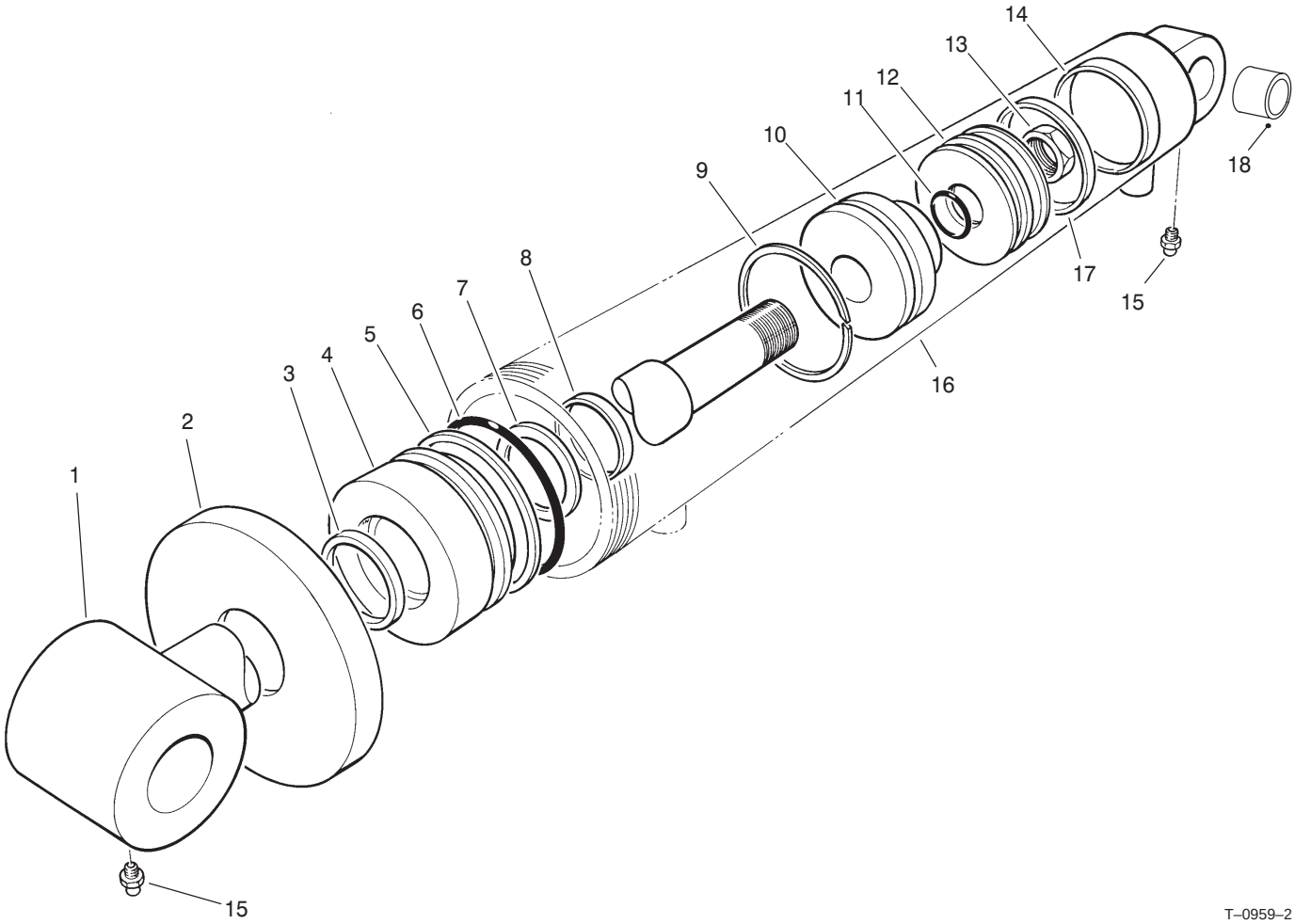

T–0959–2

Hydraulic Cylinder Assembly No. 74–2170

Ref. No.	Part No.	Qty.	Description
1	74–2230	1	Shaft/Clevis
2	74–2220	1	Collar
†3		1	Seal–Dust
4	74–2200	1	Head
†5		1	Ring–Back–Up
†6		1	O–Ring
†7		1	Seal–Uni–Ring
†8		1	Ring–Wear
9	74–2180	1	Ring–Steel
10	74–2190	1	Cushion
†11		1	Seal–Uni–Ring
12	74–2210	1	Piston
13	60–9760	1	Nut–Lock
†14		1	Ring–Wear
15	302–5	2	Fitting–Grease
†16		1	Barrel/Clevis
†17		1	Seal–Uni–Ring
18	95–1597	1	Bushing
*	86–7350	1	Kit–Repair, Seal (Incl. Ref. #3, 5–8, 11, 14 & 17)

Ref. No.	Part No.	Qty.	Description

* Not Illustrated
† Not Serviceable Separartely

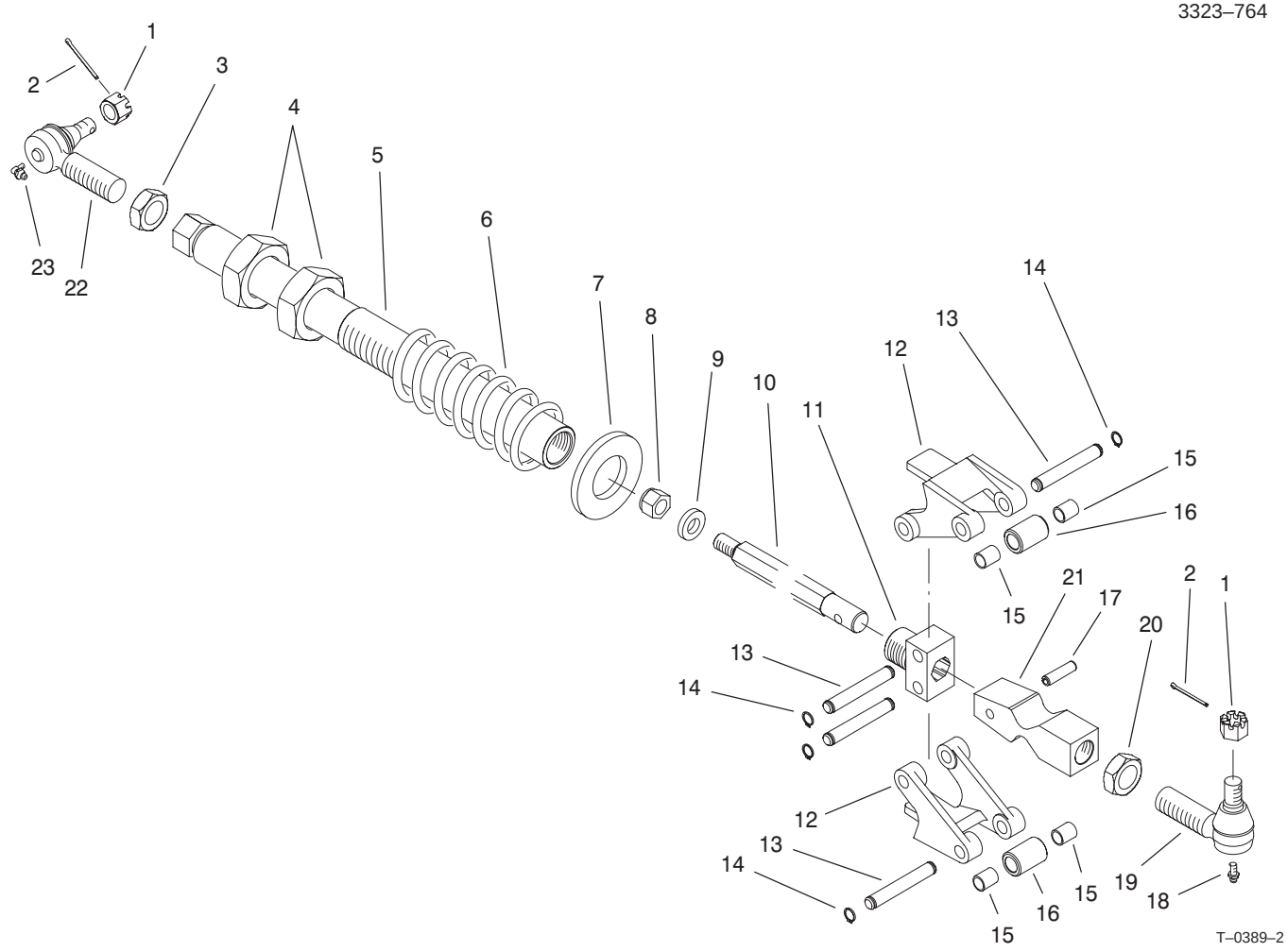

Wing Deck Latch Assembly

Ref. No.	Part No.	Qty.	Description
1	32136–2	4	Nut–Castle
2	3272–12	4	Pin–Cotter
3	21–3001–03	2	Nut–Jam, LH Thread
4	3220–22	4	Nut–Jam
5	69–7210–03	2	Tube–Latch
6	69–8480–03	2	Spring–Compression
7	69–9100	2	Washer–Latch
8	3296–41	2	Nut–Lock
9	71–2550	2	Washer–Shaft, Latch
10	69–9680	2	Shaft–Latch
11	92–4804	2	Block–Pivot, Latch
12	69–1630–03	4	Arm–Pivot, Latch
13	92–4806	8	Pin–Latch
14	32120–47	16	Ring–Retaining
15	256–172	8	Bearing–Sleeve
16	92–4094	4	Roller–Latch
17	32121–49	2	Pin–Roll
18	302–5	2	Fitting–Grease
19	86–8100–01	2	Joint–Ball (Incl. Ref. #1 & 18)
20	21–3000–01	2	Nut–Jam
21	92–4805	2	Cam–Trip, Spring
22	86–8101–03	2	Joint–Ball (Incl. Ref. #1 & 23)
23	302–40	2	Fitting–Grease

Ref. No.	Part No.	Qty.	Description

3323–764

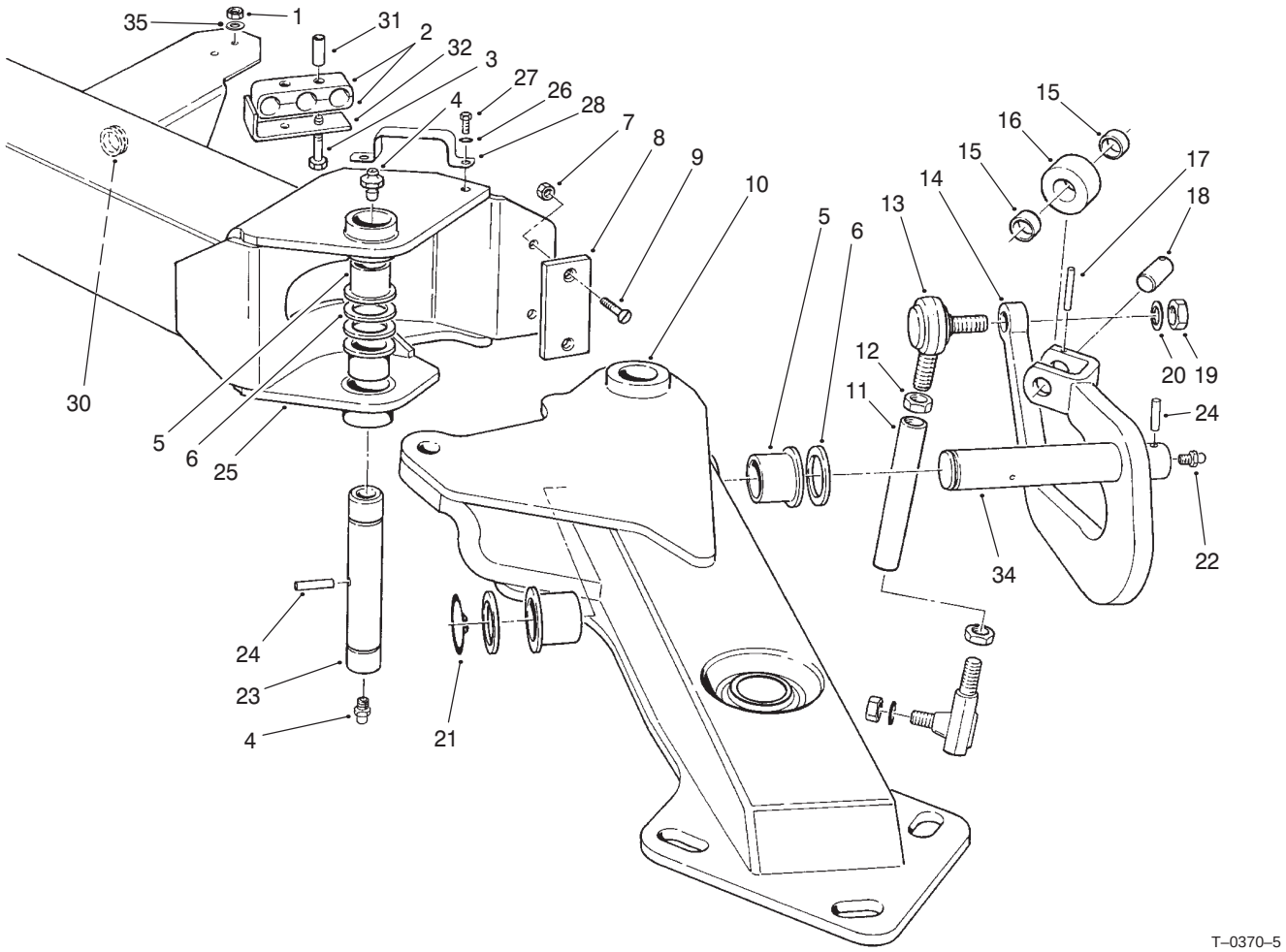

T–0370–5

Wing Deck Lift Arm Assembly

Ref. No.	Part No.	Qty.	Description
1	32128–32	4	Nut–HHF
2	74–2710	4	Clamp Half–Hydraulic Line
3	321–15	4	Screw–HH
4	302–2	4	Fitting–Grease
5	69–6470	8	Bushing–Flange
6	256–304	8	Washer–Thrust
7	32152–1	4	Nut–Lock
8	69–9300	2	Cushion–Rubber
9	32108–103	4	Screw–Machine, FH
10	93–9942–01	1	Arm–Outer Lift, LH (Incl. Ref. #5)
*	93–9941–01	1	Arm–Outer Lift, RH (Incl. Ref. #5)
11	71–2600	2	Tube–Anti–Sway
12	3220–7	4	Nut–Jam
13	2411–40	4	Joint–Ball
14	98–3311–01	1	Arm–Anti–Sway, LH
*	98–3312–01	1	Arm–Anti–Sway, RH
15	256–76	4	Bushing–Sleeve
16	69–9240	2	Roller–Cam
17	32121–34	2	Pin–Roll
18	69–9250	2	Shaft–Roller
19	3219–7	4	Nut–Lock
20	3253–9	4	Washer–Lock
21	32151–10	2	Ring–Retaining

Ref. No.	Part No.	Qty.	Description
22	302–5	2	Fitting–Grease
23	71–2620	2	Shaft–Lift Arm, Elbow
24	32121–110	4	Pin–Roll
25	93–9926–01	1	LH Lift Arm ASM (Incl. Ref. #5)
*	93–9925–01	1	RH Lift Arm ASM (Incl. Ref. #5)
26	3254–2	4	Washer
27	322–3	4	Screw–HH
28	93–9928	2	Clamp–Hose
30	93–9912	2	Grommet
31	74–2730	4	Tube–Clamp
32	94–6772–01	2	Retainer–Clamp
34	82–7900	2	Shaft–Arm
35	3256–22	4	Washer–Flat

* Not Illustrated

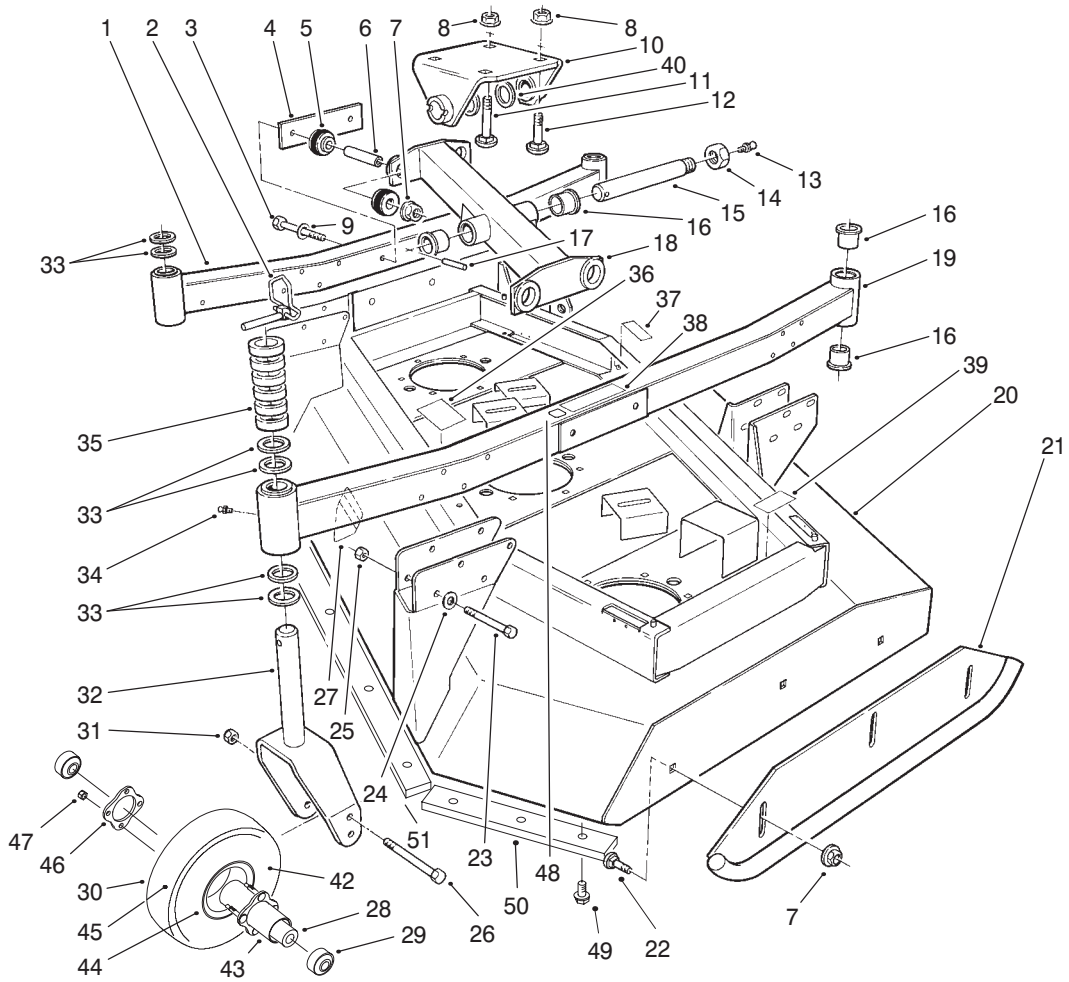

T–0335–5

Wing Deck Model No. 30591 LH and 30593 RH

Ref. No.	Part No.	Qty.	Description
1	98–7342	2	Arm–Castor, Inside (Incl. Ref. #16 & 34)
2	3290–384	8	Pin–Lynch
3	325–20	8	Screw–HH
4	69–8790–01	2	Plate–Reinforcing
5	69–9700	8	Mount–Rubber (Incl. Ref. #6)
6		8	Spacer
7	32128–23	20	Nut–HHF
8	32128–45	8	Nut–HHF
9	30–8770	8	Washer–Flat
10	69–7170–01	2	Clevis–Deck
11	3233–29	2	Bolt–CARR
12	3233–28	6	Bolt–CARR
13	302–2	2	Fitting–Grease
14	3296–68	2	Nut–Lock
15	71–2610	2	Shaft–Pivot, Deck
16	69–6470	20	Bushing–Flange
17	32121–110	2	Pin–Roll
18	98–1461–01	1	LH Lift Bar ASM (Incl. Ref. #16)
*	98–1462–01	1	RH Lift Bar ASM (Incl. Ref. #16)
19	98–7343	2	Arm–Castor, Outside (Incl. Ref. #16, 34 & 38)

Ref. No.	Part No.	Qty.	Description
20	13–5009	1	Deck–Wing, LH (Incl. Ref. #27, 36, 37 & 39)
*	13–4999	1	Deck–Wing, RH (Incl. Ref. #27, 36, 37 & 39)
21	69–6730–01	4	Skid
22	3233–9	12	Bolt–CARR
23	323–15	32	Screw–HH
24	5–0838	32	Washer–Flat
25	32128–43	32	Nut–HHF
26	327–17	8	Screw HH
27	43–8480	2	Decal–Danger
27	93–7815	2	Decal–Danger (Europe)
28	93–4241	8	Spacer
29	93–4237	16	Bearing
30	93–4240	8	10” Wheel–Pneumatic (Incl. Ref. #28–29 & 42–47)
31	3296–53	8	Nut–Lock
32	98–7300–01	8	Fork–Castor
33	69–6860	28	Washer–Thrust
34	302–5	8	Fitting–Grease
35	69–1510	48	Spacer–Castor
36	95–0819	1	Decal–Belt Routing, LH
*	95–0820	1	Decal–Belt Routing,RH
37	66–1340	2	Decal–Danger

* Not Illustrated

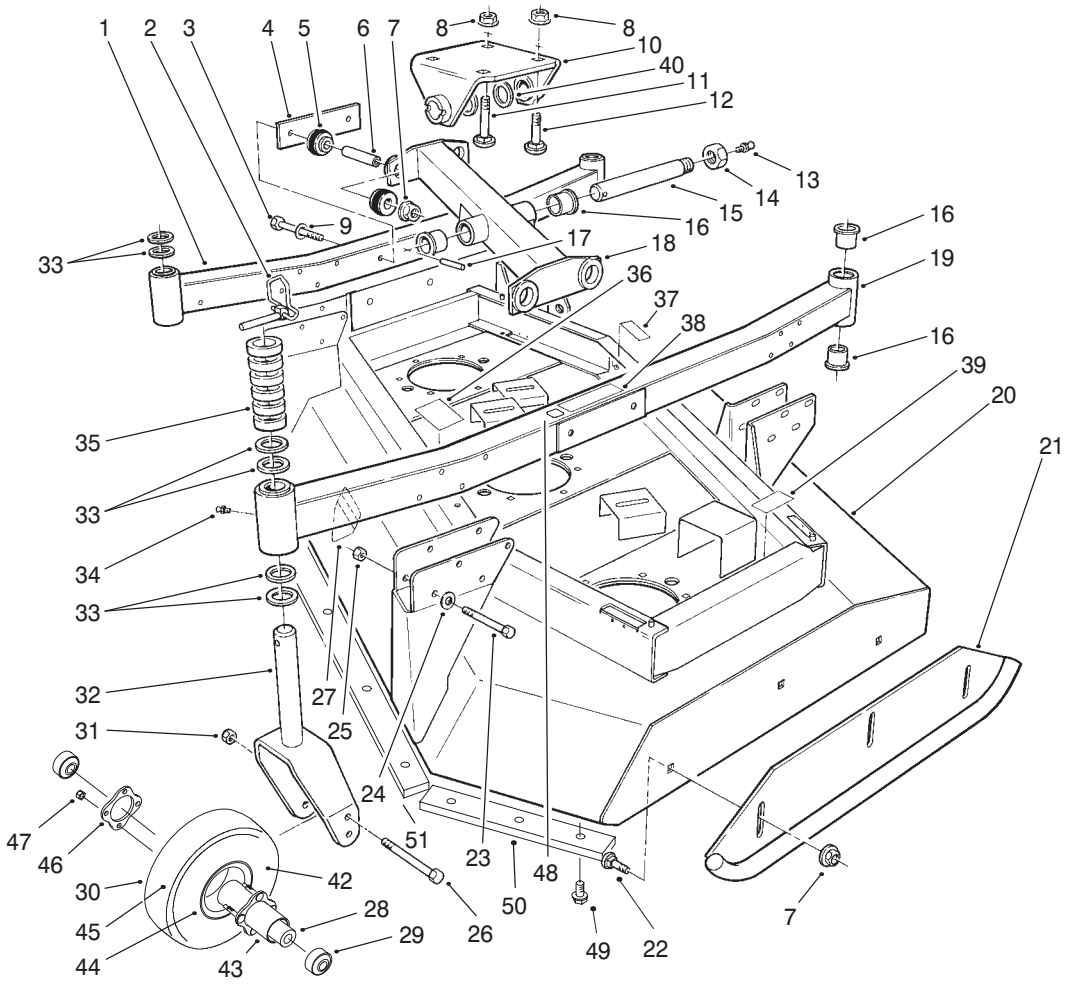

T–0335–5

Wing Deck Model No. 30591 LH and 30593 RH (Continued)

Ref. No.	Part No.	Qty.	Description
37	93–7824	2	Decal–Danger (Europe)
38	95–0818	2	Decal–Torque
39	67–5360	4	Decal–Danger
39	93–7273	4	Decal–Danger (Europe)
40	256–304	4	Washer–Thrust
42	93–4243	8	Tire–10”
43	93–5980	8	Hub
44	95–2741	16	Rim–Wheel
45	93–4244	8	Tube w/Valve
46	93–4242	8	Plate
47	32128–16	32	Nut–HHF
48	93–7252	2	Decal–CE
49	32104–31	20	Screw–HH (Europe)
50	94–9822	2	Bar–Guard, Wing Inner (Europe)
51	94–9823	2	Bar–Guard, Wing RH & LH (Europe)

Ref. No.	Part No.	Qty.	Description

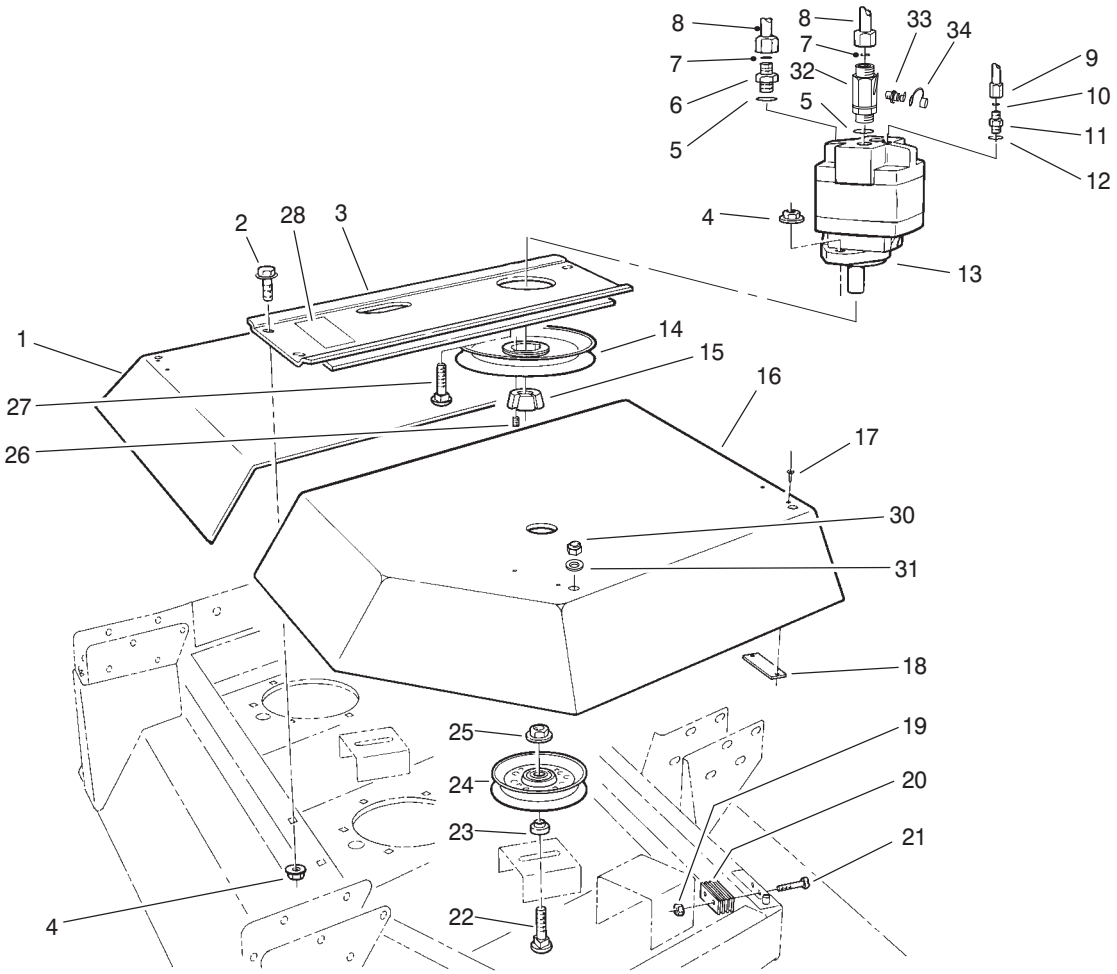

T–0346–4

Wing Deck Model No. 30591 LH and 30593 RH Drive Assembly

Ref. No.	Part No.	Qty.	Description
1	69–6800	1	Cover–Inner, LH
*	69–6820	1	Cover–Inner, RH
2	3234–12	8	Screw–HWH
3	69–6360–01	1	Plate–Motor Mounting, LH
*	69–6340–01	1	Plate–Motor Mounting, RH
4	32128–21	12	Nut–HHF
5	237–81	4	O–Ring
6	340–8	2	Fitting–Hydraulic, Straight (Incl. Ref. #5 & 7)
7	237–65	4	O–Ring
8	93–9918	4	Hydraulic Hose ASM
9	93–9917	2	Hydraulic Hose ASM
10	237–22	2	O–Ring
11	340–2	2	Fitting–Hydraulic, Straight (Incl. Ref. # 10 & 12)
12	237–42	2	O–Ring
13	94–4907	2	Motor–Hydraulic
14	63–0660–03	2	Pulley–Wing Deck, Drive
15	23–1640	2	Bushing–Lock, Taper (Incl. Ref. #26)

Ref. No.	Part No.	Qty.	Description
16	69–6810	1	Cover–Outer, LH
*	69–6830	1	Cover–Outer, RH
17	3269–25	16	Rivet–Pop
18	69–6870	8	Plate–Magnet
19	3296–2	16	Nut–Lock
20	69–6260	8	Magnet–Cover
21	32105–1	16	Screw–PH
22	3233–30	6	Bolt–CARR
23	69–6960	6	Spacer–Idler
24	63–1540–03	6	Pulley–Idler
25	32128–23	6	Nut–HHF
26		4	Screw–Set
27	3231–28	4	Bolt–CARR
28	95–0845	2	Decal–HOC
30	3296–29	4	Nut–Lock
31	3256–23	4	Washer–Flat
32	99–4442	2	Fitting
33	99–4443	2	Fitting
34	354–79	2	Cap–Dust
*	99–2318	6	V–Belt
*	3290–378	24	Tie–Cable

* Not Illustrated

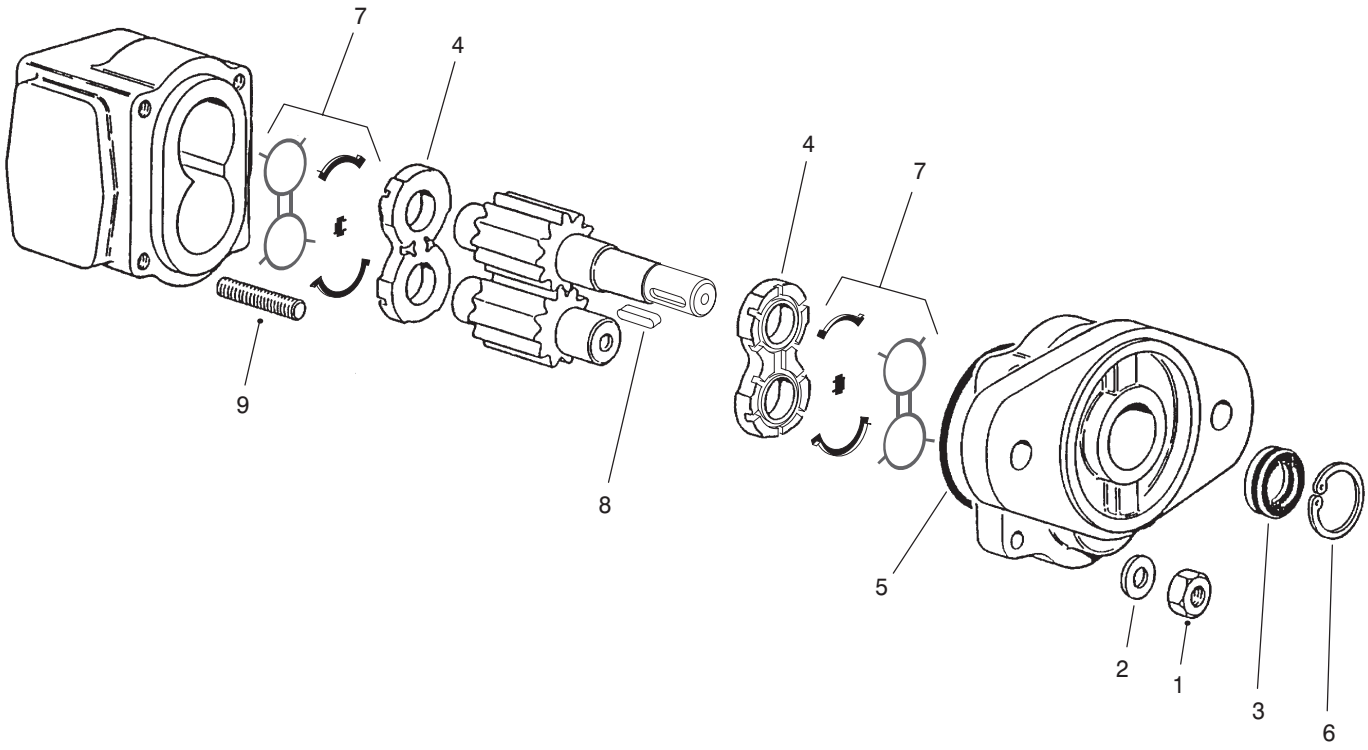

T–2313–2

Hydraulic Motor Assembly No. 94–4907

Ref. No.	Part No.	Qty.	Description
1	33016–00	4	Nut–Hex
2	33096–00	4	Washer–Flat
3	94–5391	1	Seal–Shaft
4	94–5390	2	Plate–Load
5		1	O–Ring
6		1	Ring–Retaining
7		2	Seal–Load
8	93–7637	1	Key–Square
9	99–5903	4	Stud
*	94–5392	1	Kit–Seal (Incl. Ref. #3 & 5–8)

Ref. No.	Part No.	Qty.	Description

* Not Illustrated

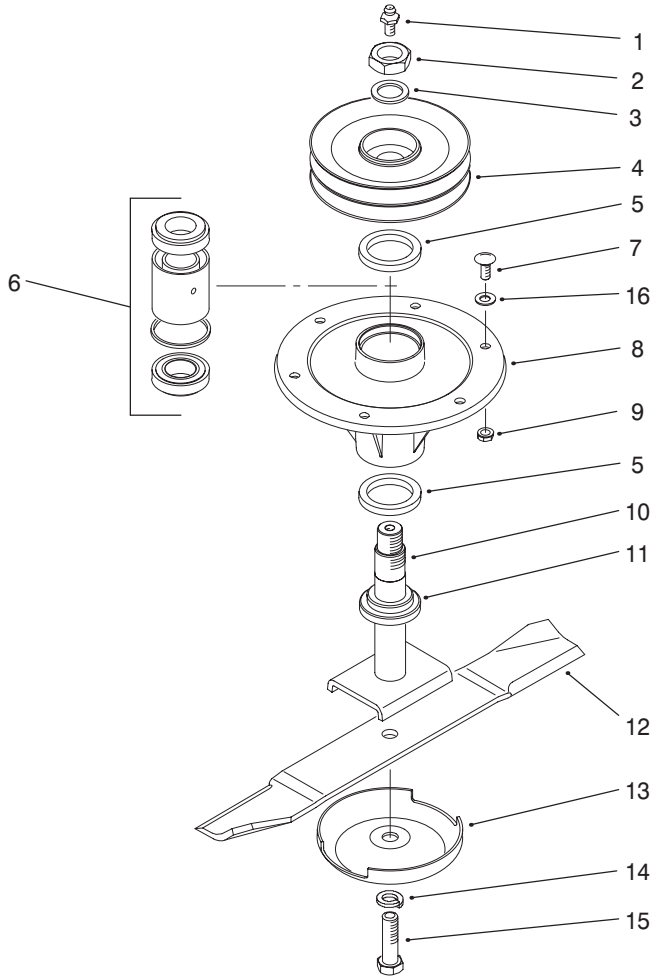

T–0337–2

Spindle Assembly

Ref. No.	Part No.	Qty.	Description
1	302–2	1	Fitting–Grease, Str.
*	302–10	1	Fitting–Grease, 45° (Used only on wing deck center & inside spindles)
2	3296–49	1	Nut–Lock
3	3–8514	1	Washer
4	69–8390–01	1	Pulley–Spindle
5	253–154	2	Seal–Wave
6	71–2530	1	Bearing ASM
7	3231–22	6	Bolt–CARR
8	69–1530	1	Housing–Spindle
9	32128–21	6	Nut–HHF
10	69–6760	1	Shaft–Spindle
11	92–9800	1	Spacer–Spindle
12	69–6920–01	1	Blade–20”
13	67–7561	1	Cup–Anti–Scalp
14	3253–8	1	Washer–Lock
15	51–4060	1	Bolt–Blade
16	3256–24	A/R	Washer–Flat

Ref. No.	Part No.	Qty.	Description

* Not Illustrated

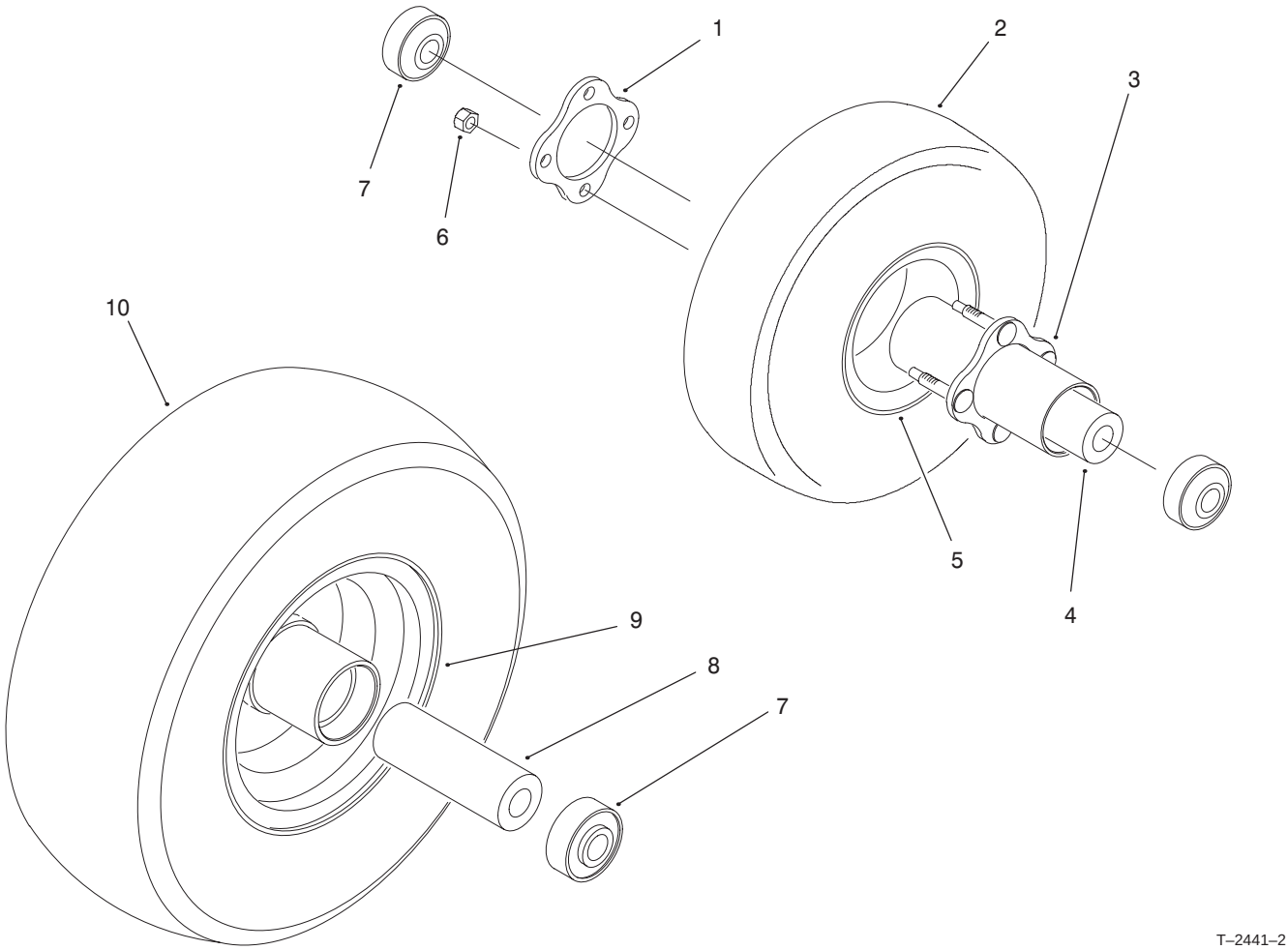

T–2441–2

10” and 13” Foam Filled Tire Assemblies

Ref. No.	Part No.	Qty.	Description
†1		1	Plate
2	93–5973	1	10” Foam Filled Tire ASM (Incl. Ref. #1, 3–7)
†3		1	Hub
4	93–4241	1	Spacer–Bearing, Inner
†5		2	Rim
†6		4	Nut–HHF
7	93–4237	4	Bearing
8	93–5630	1	Spacer–Bearing, Inner
†9		1	Rim
10	98–7329	1	12” Foam Filled Tire ASM (Incl. Ref. #7–9)

Ref. No.	Part No.	Qty.	Description

† Not Serviceable Separately

Maintenance Record

Date								


TORO®