Form No. 3323–797

44” Vacuum Bagger

Model No. 79102–200000001 and Up

Parts Catalog

Ordering Replacement Parts

To order replacement parts, please supply: the part number, the quantity, and the description of each part desired.

Understanding Reference Numbers

Each identified part in an illustration has a reference number. The reference number for a part also appears in the parts list, along with other information about the part.

This catalog uses two special reference number formats, one to indicate parts in a service assembly and another to indicate the quantity of a given part in an illustration.

Service Assembly Reference Numbers

Parts in service assemblies have reference numbers in the form **a:b.** The **a** represents the reference number of the entire service assembly and the **b** represents a sequential number unique to each part within the service assembly.

For example, a wheel assembly might be identified by reference number **6**, the tire by **6:1**, the valve by **6:2**, and the wheel by **6:3**. When you order the assembly identified by reference number 6, you receive all parts identified by reference numbers 6:1, 6:2, and 6:3. However, you may also order any part individually.

Reference numbers of this type appear in illustrations and in part lists.

Reference Numbers Indicating Quantity

In an illustration, if a reference number indicates more than one part, the reference number has the form **nX y.** The **n** represents the quantity of the part, the **X** is the multiplication symbol, and the **y** represents the reference number.

For example, in an illustration, the reference number **2X 37** means that two of the parts identified by reference number 37 are indicated.

© The TORO Company — 1999
All Rights Reserved

Contents

Description	Page
Drive Components Assembly	3
Blower Housing Assembly	4
Top Bag Assembly	5
Deck Components Assembly	6
Bag And Frame Assembly	7
Baffle Assembly	8

Part Description Abbreviations

Part descriptions in this catalog may include the following abbreviations.

Abbreviation	Meaning
AR	as required
ASM	assembly
CARR	carriage
DEG	degrees
FH	flat head
GA	gauge
HF	hex flange
HH	hex head
HHF	hex head flange
HLH	hex lag head
HJ	hex jam
HOC	height-of-cut
HS	hex socket
HSBH	hex socket button head
HSFH	hex socket flat head
HSH	hex socket head
HWH	hex washer head
HWHTF	hex washer head thread forming
INC	incorporated
LH	left hand
NI	nylon insert
PPH	Phillips pan head
PTH	Phillips truss head
PTO	power take off
RH	right hand
SFH	slotted fillister head
SHH	slotted hex head
SQH	square head
SHWH	slotted hex washer head
SPH	slotted pan head
SRH	slotted round head
STD	standard
TAP	self tapping
TTH	Torx truss head
WH	wing head

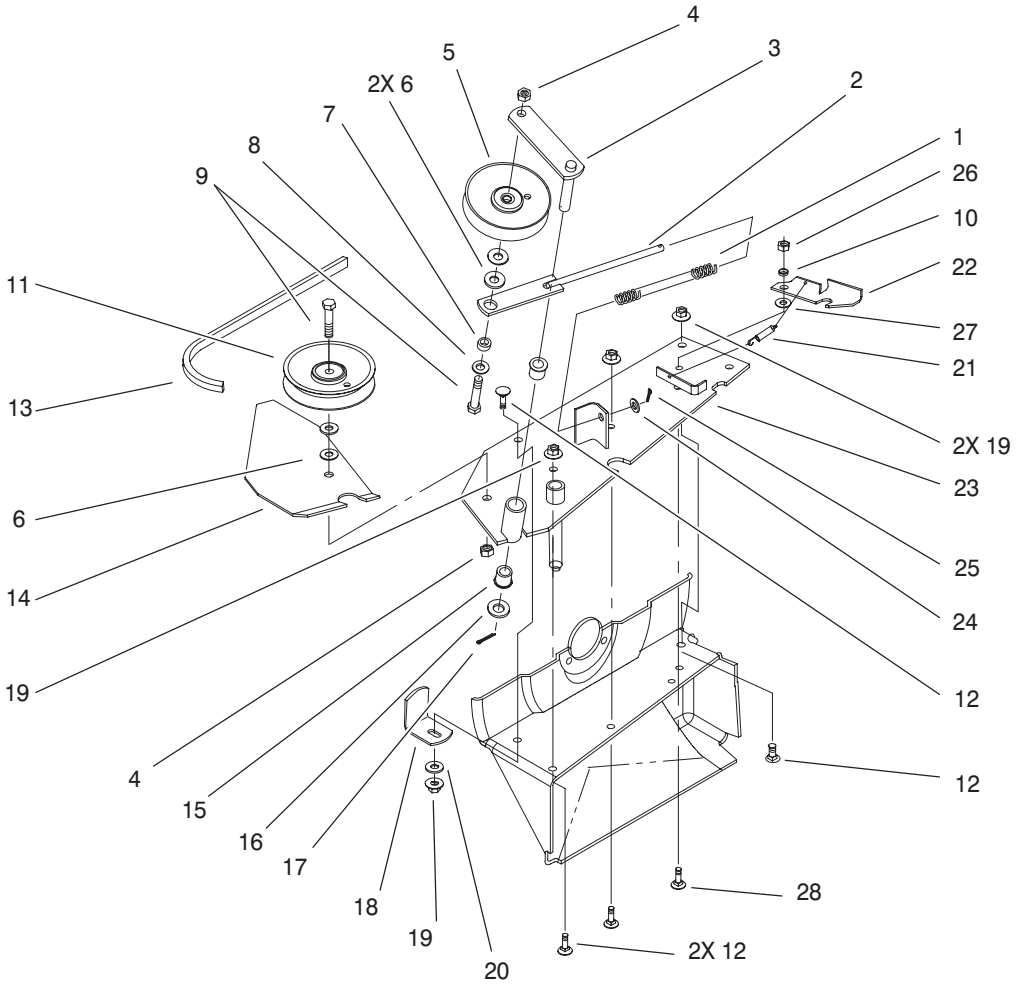

Sheet No.:2

Drive Components Assembly

Ref. No.	Part No.	Qty.	Description
1	79–7110	1	Spring–Compression
2	79–2020	1	Spring–Rod
3	79–1970–03	1	Arm–Idler
4	3296–39	2	Nut–Lock, NI
5	92–7099	1	Pulley – Idler
6	3256–4	4	Washer–Flat
7	107213	1	Spacer
8	3256–24	1	Washer–Flat
9	323–10	2	Screw–HH
10	93–8013	1	Bushing
11	93–1622	1	Pulley–Idler
12	3230–16	4	Screw–HH
13	93–8007	1	Belt – V
14	79–7280–03	1	Support–Belt Shield
15	100284	2	Bushing
16	3256–26	1	Washer–Flat
17	3272–7	1	Pin–Cotter
18	79–7440	1	Bracket–Support, Housing
19	32128–20	4	Nut–HF
20	3256–3	1	Washer–Flat
21	79–7390	1	Spring–Extension
22	93–8012–03	1	Latch–Blower
23	93–8016–03	1	Mounting–Blower
24	3256–23	1	Washer–Flat
25	3272–10	1	Pin–Cotter

Ref. No.	Part No.	Qty.	Description
26	3296–29	1	Nut–Lock,NI
27	98–3499	1	Washer – Flat
28	3230–2	1	Screw–CARR

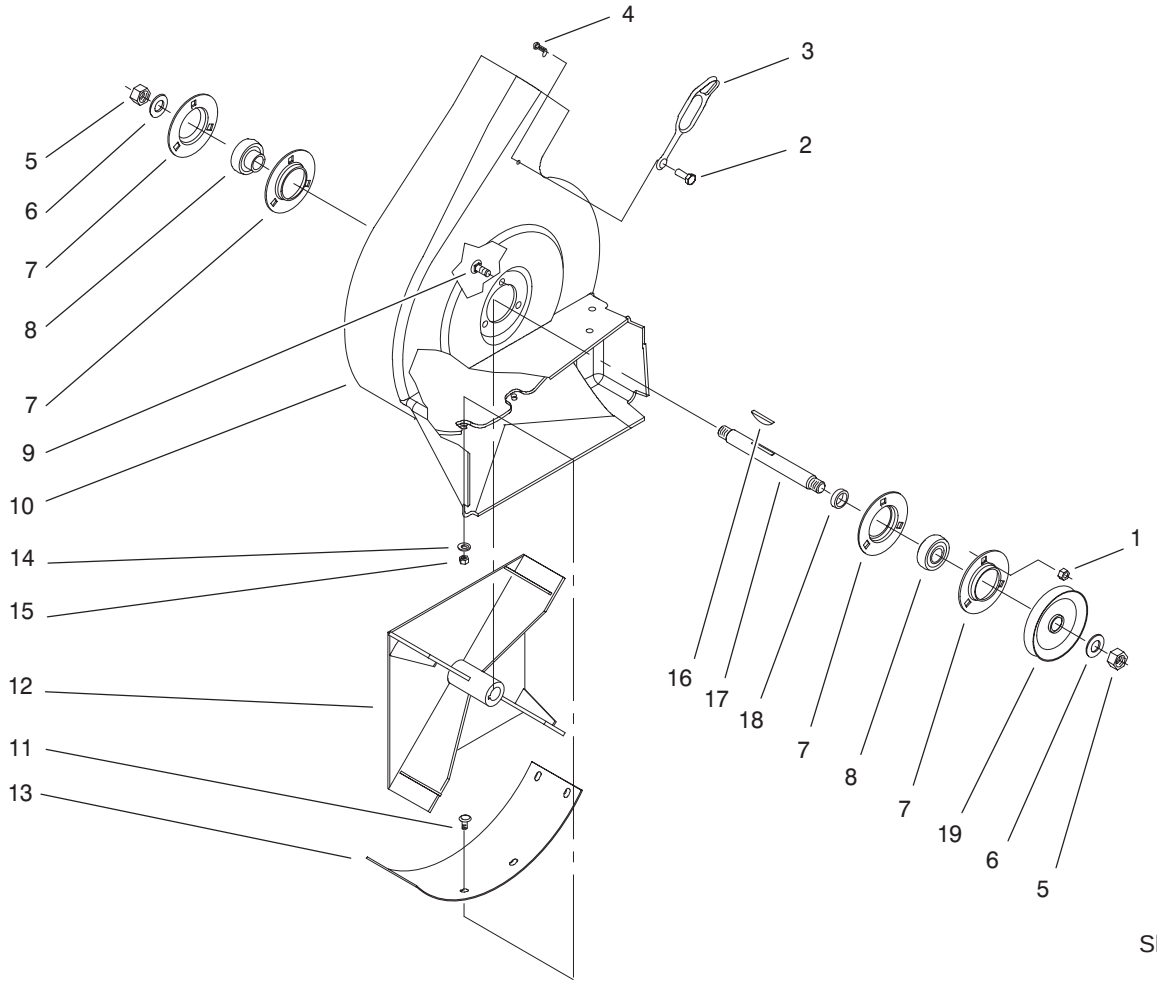

Sheet No.:3

Blower Housing Assembly

Ref. No.	Part No.	Qty.	Description
1	32128–20	6	Nut–HF
2	3290–479	1	Fastener–Panel
3	82–5690	1	Retainer–Duct
4	22–9741	1	Spacer–Interlock
5	3220–6	2	Nut–Jam
6	3253–8	2	Washer–Lock, Sp
7	251–341	4	Flange
8	251–288	2	Bearing–Ball
9	3230–16	6	Screw–HH
10	93–8005	1	Housing–Blower Vac
11	3229–22	6	Screw–CARR
12	79–4300–03	1	Impeller
13	79–7170–03	1	Cover–Blower, Bottom
14	3256–22	6	Washer–Flat
15	3296–56	6	Nut–Lock, NI
16	3257–40	1	Key–Hi–Pro
17	79–1470	1	Shaft–Blower
18	7038	1	Spacer
19	79–1460	1	Pulley–Blower

Ref. No.	Part No.	Qty.	Description

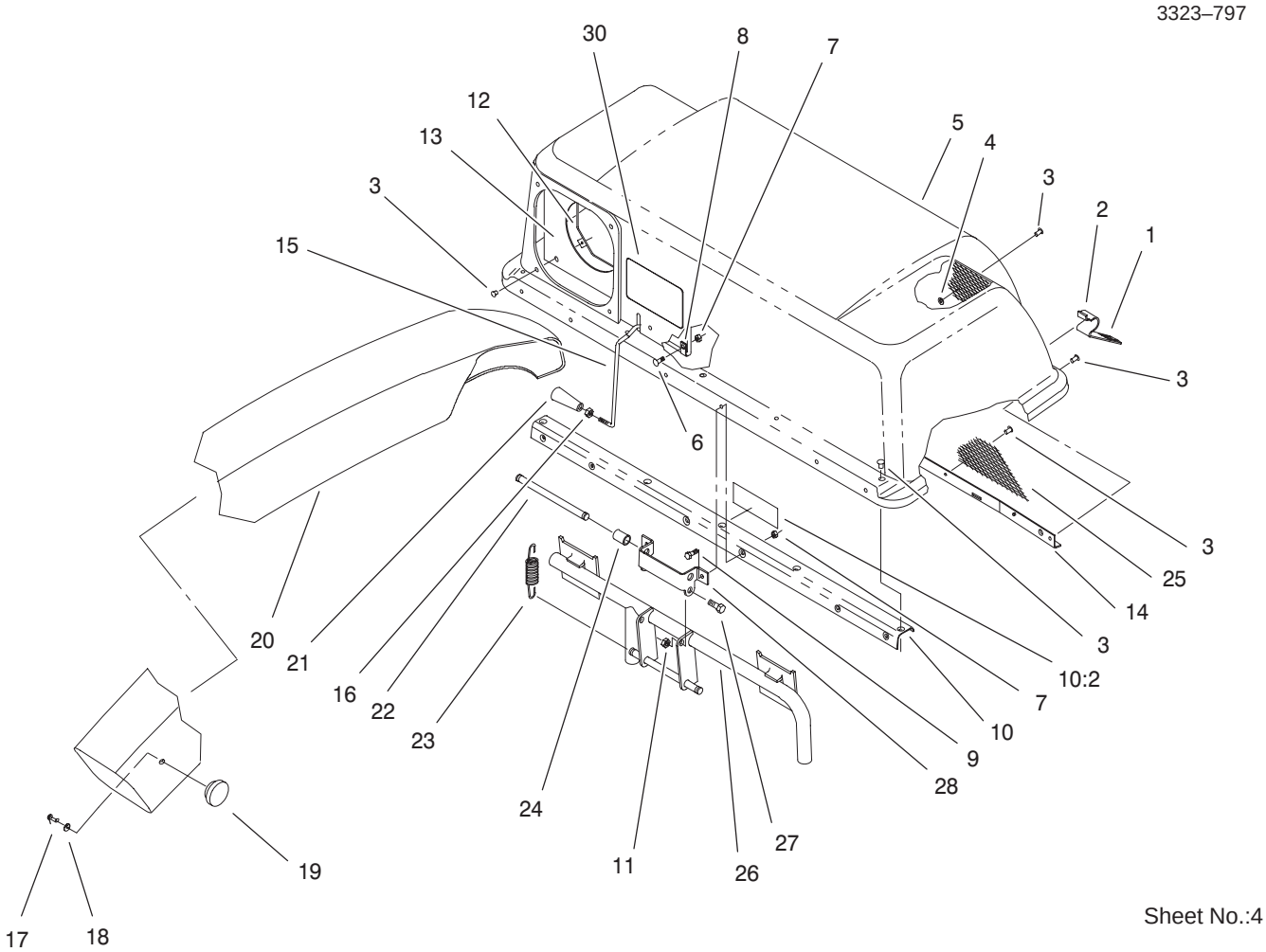

Top Bag Assembly

Ref. No.	Part No.	Qty.	Description
1	115880	2	Grip
2	115481–03	2	Latch–Bagger, Top
3	114439	24	Poprivet
4	9202704	4	Washer
5	92–1734	1	Top–Bagger
6	321–4	2	Screw–HH
7	3296–42	4	Nut–Lock
8	2412–91	2	Clamp
9	321–4	2	Screw–HH
10	88–9570	1	Stiffener ASM
10:2	92–7113	1	Decal – Caution
11	3296–39	2	Nut–Lock, NI
12	114966	1	Clamp–Seal
13	117239	1	Seal–Chute
14	92–1736–03	1	Support–Screen
15	114969	1	Feeler–Bag Fill
16	3218–1	1	Nut–Jam
17	32144–8	1	Screw–HH
18	3256–49	1	Washer–Flat
19	233–68	1	Knob
20	100–6150	1	Chute–Discharge
21	118320	1	Handle–Tapered
22	114960	1	Pin–Spring
23	114962	2	Spring–Extension
24	9790944	2	Spacer
25	114967	1	Screen–Bagger

Ref. No.	Part No.	Qty.	Description
26	114955–03	1	Frame ASM
27	323–6	2	Screw–HH
28	114961–03	1	Hinge–Bag, Top
30	116347	1	Decal–Easy Twin

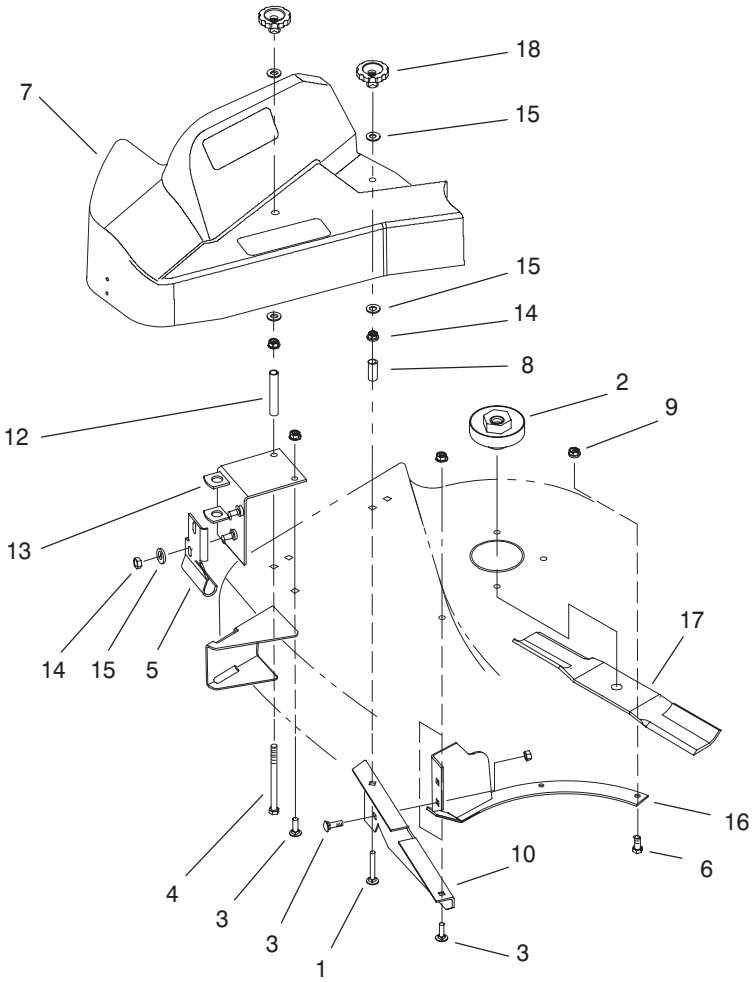

Sheet No.:5

Deck Components Assembly

Ref. No.	Part No.	Qty.	Description
1	3230–8	1	Screw–CARR
2	93–8008	1	Pulley
3	3230–16	4	Screw–HH
4	100–4184	1	Screw–CARR
5	93–9344–03	1	Bracket–Pivot
6	321–4	2	Screw–HH
7	93–8025	1	Belt Shield ASM
8	93–8009	1	Tube – Latch
9	3296–42	2	Nut–Lock
10	100–4188–03	1	Baffle–Rear
12	93–8023	1	Tube – Spacer
13	93–8020–03	1	Pivot–Bracket
14	3296–29	8	Nut–Lock,NI
15	3256–23	6	Washer–Flat
16	100–4189–03	1	Ring–Bagging, RH
17	55–4940–03	3	Blade
18	19–4050	2	Knob

Ref. No.	Part No.	Qty.	Description

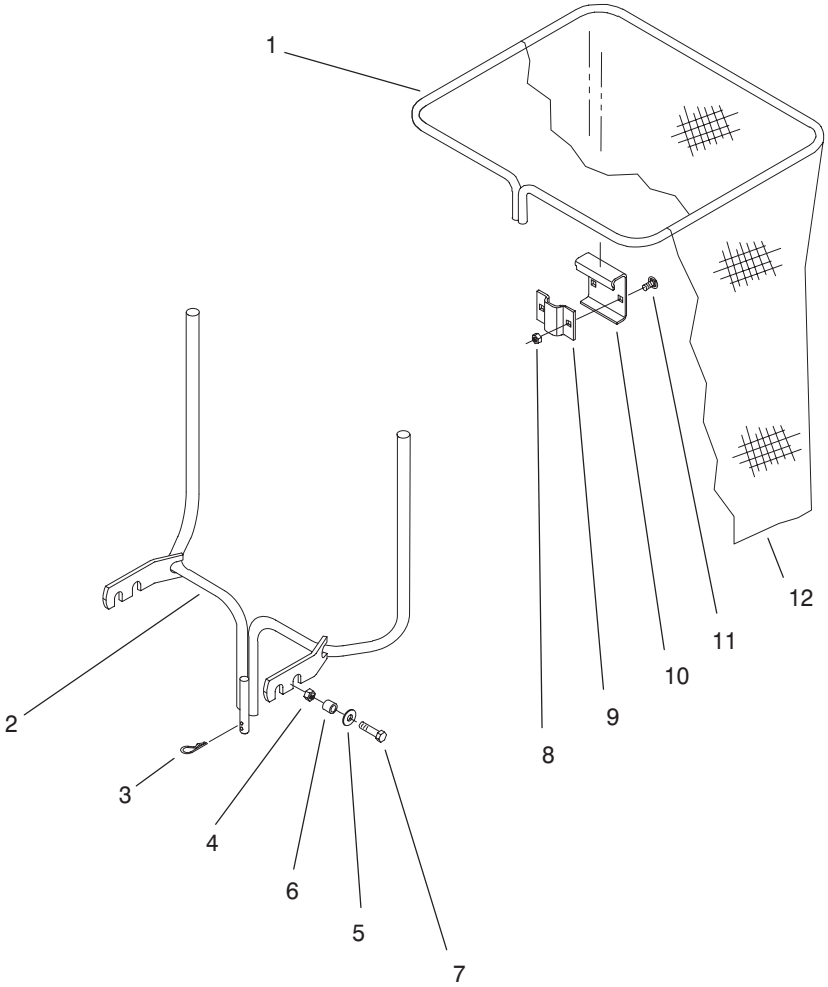

Sheet No.:6

Bag And Frame Assembly

Ref. No.	Part No.	Qty.	Description
1	114972–03	2	Frame–Bag
2	93–8015–03	1	Bracket–Bagger
3	9335064	1	Pin–Hair
4	3296–39	2	Nut–Lock, NI
5	9202204	2	Washer
6	105474	2	Spacer
7	323–10	2	Screw–HH
8	3296–29	4	Nut–Lock,NI
9	114974–03	2	Clamp
10	114973–03	2	Hanger–Bag
11	3230–1	4	Screw–CARR
12	93–1623	2	Bag–26” Depth

Ref. No.	Part No.	Qty.	Description

3323–797

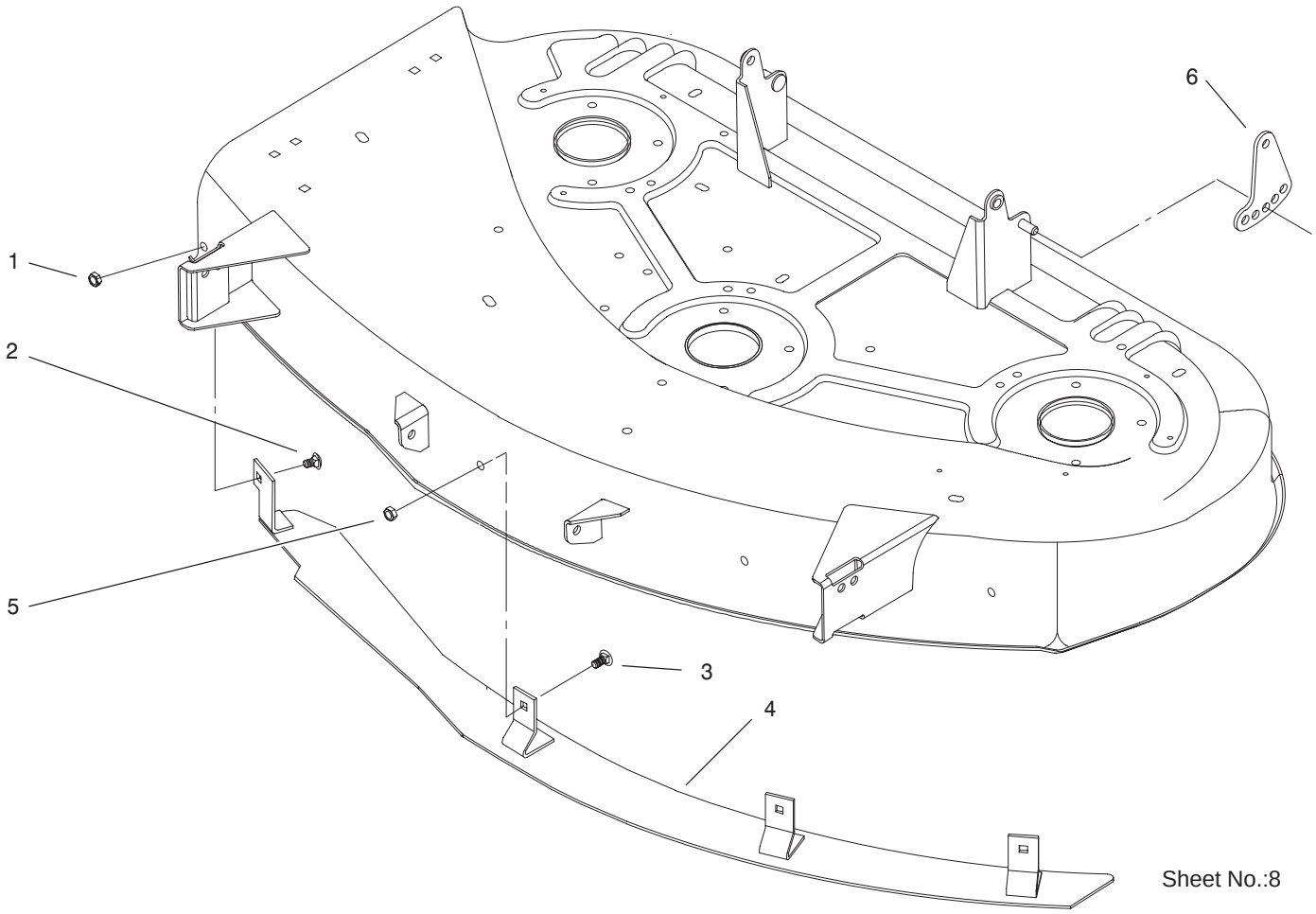

Baffle Assembly

Ref. No.	Part No.	Qty.	Description
1	3296–47	1	Nut–Lock, NI
2	3230–19	1	Screw–CARR
3	3230–16	3	Screw–HH
4	93–9950–03	1	Baffle
5	3296–29	3	Nut–Lock,NI
6	93–9910–03	2	Link – Adjusting, HOC

Ref. No.	Part No.	Qty.	Description

Maintenance Record

Date								

Maintenance Record

Date								

Maintenance Record

Date								

TORO®