Form No. 3323-809

TORO®

Recycler®

Walk Power Lawn Mower

Model No. 20010—200000001 and Up
Model No. 20020—200000001 and Up
Model No. 20021—200000001 and Up
Model No. 20028—200000001 and Up

Operator’s Manual

Para obtener una versión gratis de este manual en español, escriba a la dirección indicada más abajo. Asegúrese de indicar el modelo y el número de serie de su producto.

Pour obtenir gratuitement une version en français de ce manuel, écrivez à l’adresse ci-dessous. N’oubliez pas d’indiquer les numéros de modèle et de série de votre produit.

The Toro Company, Attn: Parts Dept., 8111 Lyndale Ave S, Bloomington, MN 55420-1196

Contents

	Page
Introduction	2
Safety	3
General Lawn Mower Safety	3
Safety and Instruction Decals	5
Assembly	6
Unfolding the Handle	6
Changing the Handle Height	7
Before Starting	7
Filling the Crankcase with Oil	7
Filling the Fuel Tank with Gasoline	8
Operation	9
Controls	9
Starting the Engine	9
Stopping the Engine	9
Using the Self-propel Drive	9
Adjusting the Cutting Height	10
Operating Tips	10
Maintenance	12
Recommended Maintenance Schedule	12
Checking the Engine Oil Level	13
Changing the Engine Oil	13
Cleaning the Underside of the Lawn Mower Housing	14
Replacing the Air Filter	15
Maintaining the Blade	15
Lubricating the Self-propel Drive	17
Adjusting the Self-propel Drive Cable	18
Cleaning under the Belt Cover	18
Replacing the Spark Plug	18
Emptying the Fuel Tank	19
Troubleshooting	19
Storage	20
Preparing the Fuel System	20
Preparing the Engine	20
General Information	20
Folding the Handle	21
Removing from Storage	21
Accessories	22
Rear Grass Catcher	22
Side Discharge Chute	24
Using the Discharge Tunnel Plug	25
The Toro Total Coverage Guarantee	28

Introduction

Thank you for choosing a Toro product. We want you to be completely satisfied with your new purchase.

Read this manual carefully to learn how to operate and maintain your product properly. The information in this manual can help you and others avoid injury and product damage. Although Toro designs and produces safe products, you are responsible for operating the product properly and safely.

Whenever you contact your Authorized Service Dealer or the factory for help with service, genuine Toro parts, or additional information, have the model number and the serial number of your product handy. You will find the model number and serial number decal on the product as illustrated in Figure 1.

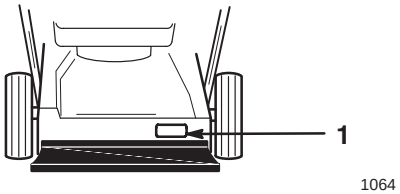

Figure 1

1. Model number and serial number decal

Write the product model number and serial number in the space below:

Model No. _____

Serial No. _____

This manual identifies potential hazards and has special safety messages that help you and others avoid personal injury and even death. DANGER, WARNING, and CAUTION are words used to identify the level of hazard.

DANGER signals an extreme hazard that will cause serious injury or death if you do not follow the recommended precautions.

WARNING signals a hazard that may cause serious injury or death if you do not follow the recommended precautions.

CAUTION signals a hazard that may cause minor or moderate injury if you do not follow the recommended precautions.

©1999 The Toro Company
All Rights Reserved

Printed in USA

This manual uses two other words to highlight information. **Important** calls attention to special mechanical information and **Note** emphasizes general information worthy of special attention.

Safety

This lawn mower meets or exceeds CPSC blade safety requirements for walk-behind rotary mowers and the B71.1 specifications of the American National Standards Institute, in effect at time of production. However, improper use or maintenance by the operator or owner can result in injury. To reduce the potential for injury, comply with these safety instructions.

Toro designed this lawn mower for cutting and mulching grass, or, when equipped with a grass bag, for catching cut grass. Any use for purposes other than these could prove dangerous to the operator or to bystanders.

Note: This engine is **not** equipped with a spark arrester muffler. Operating this mower on any forest-covered, brush-covered, or unimproved grass-covered land without an approved spark arrester muffler may violate your state law.

WARNING

POTENTIAL HAZARD
- **Engine exhaust contains carbon monoxide, which is an odorless, deadly poison.**

WHAT CAN HAPPEN
- **Carbon monoxide can kill you.**

HOW TO AVOID THE HAZARD
- **Do not run the engine indoors or in an enclosed area.**

To ensure maximum safety, best performance, and to gain knowledge of the product, it is essential that you and any other operator of the lawn mower read and understand the contents of this manual before the motor is ever started. Pay particular attention to the safety alert symbol ⚠ which means CAUTION, WARNING, OR DANGER — "personal safety instruction." Read and understand the instruction because it has to do with safety. Failure to comply with instruction may result in personal injury.

General Lawn Mower Safety

The following instructions have been adapted from the ANSI/OPEI standard B71.1—1998 and ISO standard 5395:1990(E). Information or terminology specific to Toro lawn mowers is enclosed in parenthesis.

This cutting machine is capable of amputating hands and feet and throwing objects. Failure to observe the following safety instructions could result in serious injury or death.

Training

- Read the instructions carefully. Be familiar with the controls and the proper use of the equipment before starting.
- See manufacturer's instructions for proper operation and installation of accessories. Only use accessories approved by the manufacturer.
- Never allow children or people unfamiliar with these instructions to use the mower. Local regulations may restrict the age of the operator.
- Never mow while people, especially children, or pets are nearby. Stop mower if anyone enters the area.

Tragic accidents can occur if the operator is not alert to the presence of children. Children are often attracted to the mower and the mowing activity. **Never** assume that children will remain where you last saw them.

- Keep children out of the mowing area and under the watchful care of a responsible adult.
- Be alert and turn mower off if children enter the area.
- Use extra care when approaching blind corners, shrubs, trees, or other objects that may obscure vision.
- Keep in mind that the operator or user is responsible for accidents or hazards occurring to other people or their property.

Preparation

- While mowing, always wear substantial footwear and long trousers.
- Do not operate the equipment when barefoot or wearing open sandals.
- Always wear safety goggles or safety glasses with side shields when operating mower.
- Thoroughly inspect the area where the equipment is to be used and remove all stones, sticks, wires, bones, and other foreign objects.
- **Warning: Gasoline is highly flammable.** Take the following precautions:
  - Store fuel in containers specifically designed for this purpose.
  - Refuel outdoors only and do not smoke while refuelling.
  - Add fuel before starting the engine. Never remove the cap of the fuel tank or add gasoline while the engine is running or when the engine is hot.

  - If gasoline is spilled, do not attempt to start the engine but move the machine away from the area of spillage and avoid creating any source of ignition until gasoline vapors have dissipated.
  - Replace all fuel tank and container caps securely.
  - If the fuel tank has to be drained, do this outdoors.
- Replace faulty mufflers.
- Before using, always visually inspect to see that the blades, blade bolts, and cutter assembly are not worn or damaged. Replace worn or damaged blades and bolts in sets to preserve balance.
- On multibladed machines, take care as rotating one blade can cause other blades to rotate.

Operation

- Do not operate the engine in a confined space where dangerous carbon monoxide fumes can collect.
- Mow only in daylight or in good artificial light.
- Always be sure of your footing on slopes.
- Walk; never run.
- Keep a firm hold on the handle.
- For wheeled rotary machines, mow across the face of slopes, never up and down.
- Exercise extreme caution when changing direction on slopes.
- Do not mow excessively steep slopes.
- Use extreme caution when reversing or pulling the mower towards you.
- Before and while moving backwards, look behind and down for small children.
- Stop the blade(s) if the mower has to be tilted for transportation when crossing surfaces other than grass and when transporting the mower to and from the area to be mowed.
- Never operate the mower with damaged or missing guards or shields, or without safety devices; for example, deflectors and/or grass catchers in place.
- Do not change the engine governor settings or overspeed the engine.
- Disengage all blade and drive clutches before starting the engine.
- Start the engine or switch on the motor carefully according to instructions and with feet well away from the blade(s).
- Do not tilt when starting the engine or switching on the motor, unless the mower has to be tilted for starting. In this case, do not tilt it more than absolutely necessary and lift only the part which is away from the operator.
- Do not start the engine when standing in front of the discharge chute.
- Do not put hands or feet near or under rotating parts. Keep clear of the discharge opening at all times.
- Never pick up or carry a mower while the engine is running.
- Stop the engine and disconnect the spark plug lead
  - before clearing blockages or unclogging chute;
  - before checking, cleaning, or working on the mower;
  - after striking a foreign object. Inspect the mower for damage and make repairs before restarting and operating the mower;
  - if mower starts to vibrate abnormally (check immediately).
- Stop the engine
  - whenever you leave the mower;
  - before refuelling.
- Reduce the throttle setting during engine run-out and, if the engine is provided with a shut-off valve, turn the fuel off at the conclusion of mowing.
- Stop the blade(s) when crossing gravel drives, walks, or roads.
- Shut the engine (motor) off and wait until the blade comes to complete stop before removing grass catcher.
- Do not operate the mower while under the influence of alcohol or drugs.
- If the equipment should start to vibrate abnormally, stop the engine (motor) and check immediately for the cause. Vibration is generally a warning of trouble.

Slopes are a major factor related to slip and fall accidents which can result in a severe injury. If you feel uneasy on a slope, do not mow it.

- Watch for holes, ruts, or bumps. Tall grass can hide obstacles.
- **Do not** mow near drop-offs, ditches, or embankments. The operator could lose footing or balance.
- **Do not** mow on wet grass. Reduced footing could cause slipping.

Maintenance and Storage

- Keep all nuts, bolts (especially blade attachment bolts), and screws tight to be sure the equipment is in safe working condition.
- Never store the equipment with gasoline in the tank inside a building where fumes may reach an open flame or spark.
- Allow the engine to cool before storing in any enclosure.
- To reduce the fire hazard, keep the engine, muffler, battery compartment, and gasoline storage area free of grass, leaves, or excessive grease.
- Check the grass catcher frequently for wear or deterioration.
- Replace worn or damaged parts for safety.
- Use extra care when handling gasoline; vapors are explosive.
- Never tamper with safety devices. Check their proper operation regularly.
- Keep the mower free of grass, leaves, or other debris build-up. Clean up oil or fuel spillage.
- Stop and inspect the equipment if you strike an object. Repair, if necessary, before restarting.
- Never attempt to make wheel height adjustments while the engine (motor) is running.
- Always disconnect electric mowers (live operated) before cleaning, repairing, or adjusting.
- Grass catcher components are subject to wear, damage, and deterioration, which could expose moving parts or allow objects to be thrown. Frequently check components and replace with manufacturer's recommended parts when necessary.
- Mower blades are sharp and can cut. Wrap the blade(s) or wear gloves, and use extra caution when servicing them.
- Do not change the engine governor setting or overspeed the engine.
- To ensure the best performance and safety, purchase only genuine Toro replacement parts and accessories. **Do not use "will fit" parts and accessories; they may cause a safety hazard.**

Safety and Instruction Decals



Safety decals and instructions are easily visible to the operator and are located near any area of potential danger. Replace any decal that is damaged or lost.



On Mower Housing (Part No. 43-8480)



On Rear Height Adjuster (Part No. 92-2914 Right) (Part No. 92-2915 Left)

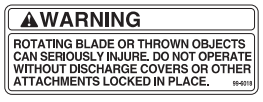

On Mower Housing (Part No. 99-6018)



On Mower Housing (Part No. 93-0248)

Assembly

Note: Determine the left and right sides of the lawn mower by standing in the operating position.

Unfolding the Handle

Models 20010, 20020, and 20028

WARNING

POTENTIAL HAZARD
- **Folding or unfolding the handle improperly can pinch, stretch, or damage one or more of the cables.**

WHAT CAN HAPPEN
- **Any pinched, stretched, or damaged cable may cause an operational failure that results in an unsafe operating condition.**

HOW TO AVOID THE HAZARD
- **Do not pinch, stretch, or damage the cables.**
- **Handle the cables with care when folding or unfolding the handle.**
- **Do not use the lawn mower if one or more of the cables are pinched, stretched, or damaged. Contact your Authorized Service Dealer.**

1. Loosen the handle knobs and lift the top handle half in an arc until the handle halves are in line and nest together (Fig. 2).

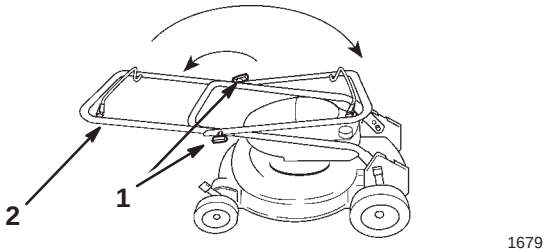

1679

Figure 2

1. Knob 2. Top handle half

2. Tighten the knobs securely.

3. Rotate the handle toward the rear of the mower until it snaps into the handle brackets (Fig. 2).

Model 20021

WARNING

POTENTIAL HAZARD
- **Folding or unfolding the handle improperly can pinch, stretch, or damage one or more of the cables.**

WHAT CAN HAPPEN
- **Any pinched, stretched, or damaged cable may cause an operational failure that results in an unsafe operating condition.**

HOW TO AVOID THE HAZARD
- **Do not pinch, stretch, or damage the cables.**
- **Handle the cables with care when folding or unfolding the handle.**
- **Do not use the lawn mower if one or more of the cables are pinched, stretched, or damaged. Contact your Authorized Service Dealer.**

1. Loosen the handle knobs and lift the top handle half in an arc until the handle halves are in line and nest together.

2. Lightly tighten one of the handle knobs.

3. Insert the left end of the lower handle and the end of the cable guide onto the pin on the left handle mounting bracket (Fig. 3).

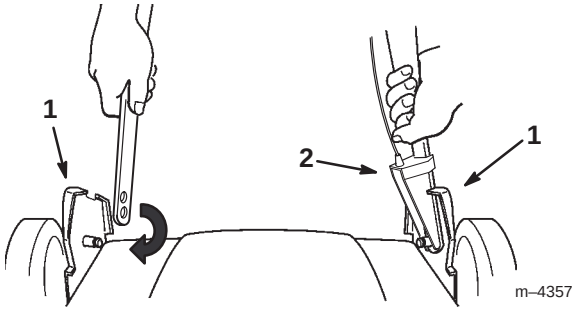

m–4357

Figure 3

1. Handle mounting bracket 2. Cable guide

4. Squeeze the handle together, installing the right end of the lower handle onto the pin on the right handle mounting bracket (Fig. 3).

IMPORTANT: Make sure the cables are routed on the inside of the handles and the starter rope is to the outside (Fig. 4).

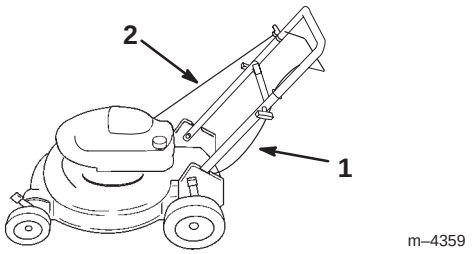

Figure 4

1. Cables
2. Starter rope

5. Tighten both handle knobs securely.

6. Install the traction cable spring onto the transmission bracket if it is not already connected (Fig. 5).

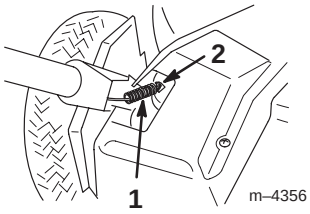

Figure 5

1. Traction cable spring
2. Transmission bracket

Changing the Handle Height

The handle has two height positions: high and low (Fig. 6). Choose a handle height position that is most comfortable for you.

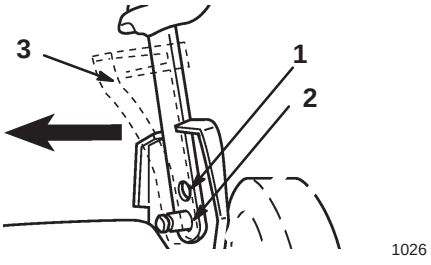

Figure 6

1. Low setting
2. High setting
3. Cable anchor

1. Squeeze the bottom handle section (both sides) inward off the pins.

2. Position the handle and the cable anchor over the pins at the desired height.

Note: You may need to loosen and slightly move the belt cover.

3. Adjust the cable. Refer to *Adjusting the Self-propel Drive Cable* on page 18.

Before Starting

Filling the Crankcase with Oil

The crankcase can hold 20 ounces (0.59 liters) of oil. Use only high-quality, SAE 30 or 10W30 weight detergent oil that has the American Petroleum Institute (API) “service classification” — SF, SG, SH, or SJ.

Before each use, make sure that the oil level is between the *Add* and the *Full* marks on the dipstick (Fig. 7).

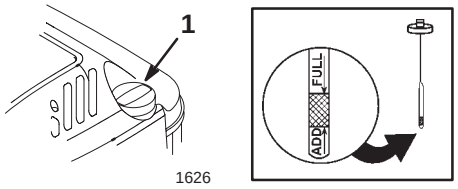

Figure 7

1. Dipstick

To add oil:

1. Move the lawn mower to a level surface.

2. Clean around the dipstick (Fig. 7).

3. Remove the dipstick by rotating the cap counterclockwise 1/4 turn and pulling it out.

4. Wipe the dipstick clean with a clean cloth.

5. Fully insert the dipstick into the filler neck, then remove it.

Note: To ensure an accurate oil level reading, you must fully install the dipstick.

6. Read the oil level on the dipstick (Fig. 7).

7. If the oil level reading is below the *Add* mark on the dipstick, **slowly** pour only enough oil into the filler hole to raise the oil level to the *Full* mark on the dipstick.

IMPORTANT: Do not overfill the crankcase with oil and run the engine; engine damage will result. Drain the excess oil until the oil level on the dipstick reads *Full*.

8. Insert the dipstick into the filler neck and rotate the cap clockwise 1/4 turn.

Filling the Fuel Tank with Gasoline

For best results, use clean, fresh, lead-free gasoline, including *oxygenated* or *reformulated* gasoline, with an octane rating of 87 or higher. To ensure freshness, purchase only the quantity of gasoline that you expect to use in 30 days. Using unleaded gasoline results in fewer combustion deposits and longer engine life. You may use leaded gasoline if unleaded gasoline is not available.

IMPORTANT: Do not add oil to the gasoline.

IMPORTANT: Do not use methanol, gasoline containing methanol, gasohol containing more than 10% ethanol, premium gasoline, or white gas. Using these fuels can damage the engine's fuel system.

IMPORTANT: Do not use gasoline that has been stored since the last mowing season or longer.

DANGER

POTENTIAL HAZARD
- **In certain conditions, gasoline is extremely flammable and highly explosive.**

WHAT CAN HAPPEN
- **A fire or explosion from gasoline can burn you and others and can damage property.**

HOW TO AVOID THE HAZARD
- **Use a funnel and fill the fuel tank outdoors, in an open area, and when the engine is cold. Wipe up any gasoline that spills.**
- **Do not fill the fuel tank completely full. Add gasoline to the fuel tank until the level is 1/4 to 1/2 inch (6 to 13 mm) below the bottom of the filler neck. This empty space in the tank allows gasoline to expand.**
- **Never smoke when handling gasoline, and stay away from an open flame or where a spark may ignite the gasoline fumes.**
- **Store gasoline in an approved container and keep it out of the reach of children.**
- **Never buy more than a 30-day supply of gasoline.**

DANGER

POTENTIAL HAZARD
- **When fueling, under certain circumstances, a static charge can develop, igniting the gasoline.**

WHAT CAN HAPPEN
- **A fire or explosion from gasoline can burn you and others and damage property.**

HOW TO AVOID THE HAZARD
- **Always place gasoline containers on the ground away from your vehicle before filling.**
- **Do not fill gasoline containers inside a vehicle or on a truck or trailer bed because interior carpets or plastic truck bed liners may insulate the container and slow the loss of any static charge.**
- **When practical, remove gasoline-powered equipment from the truck or trailer and refuel the equipment with its wheels on the round.**
- **If this is not possible, then refuel such equipment on a truck or trailer from a portable container, rather than from a gasoline dispenser nozzle.**
- **If you must use a gasoline dispenser nozzle, keep the nozzle in contact with the rim of the fuel tank or container opening at all times until fueling is complete.**

Use a fuel stabilizer/conditioner regularly during operation and storage. A stabilizer/conditioner cleans the engine during operation and prevents gum-like varnish deposits from forming in the engine during periods of storage.

IMPORTANT: Do not use fuel additives other than a fuel stabilizer/conditioner. Do not use fuel stabilizers with an alcohol base such as ethanol, methanol, or isopropanol.

1. Clean around the fuel tank cap (Fig. 8).

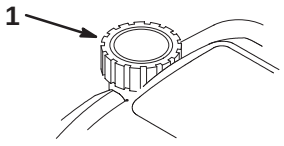

1626
GRAPHIC #

Figure 8

1. Fuel tank cap

2. Remove the fuel tank cap.

3. Fill the fuel tank with unleaded gasoline to within 1/4 to 1/2 inch (6 to 13 mm) from the top of the tank. **Do not fill into the filler neck.**

4. Install the fuel tank cap and wipe up any spilled gasoline.

Operation

Each time before you mow, make sure that the self-propel drive and the control bar operate properly. When you release the blade control bail, the engine and the blade should stop. If they do not, contact an Authorized Service Dealer.

Controls

The starter handle, the self-propel drive bail, and the blade control bail are on the upper handle as shown in Figure 9.

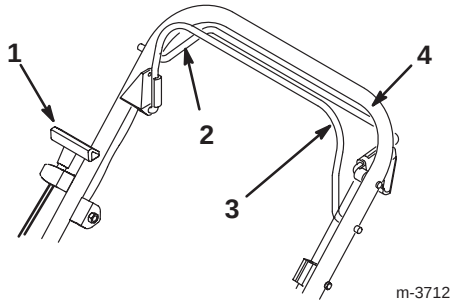

Figure 9

1. Starter handle
2. Self-propel drive bail
3. Blade control bail
4. Upper handle

Starting the Engine

1. Connect the wire onto the spark plug.
2. Push the primer three times, waiting two seconds between each push (Fig. 10).

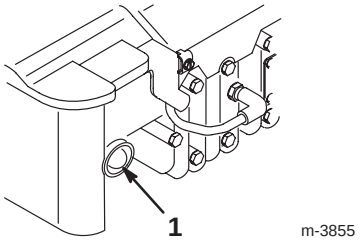

Figure 10

1. Primer

Note: If the temperature is 55°F (13°C) or below, push the primer five times, waiting two seconds between each push.

Note: Do not use the primer to start a warm engine after a brief shutdown. However, cool weather may require you to prime the engine again.

3. Hold the blade control bail against the upper handle (Fig. 9).
4. Pull the starter handle lightly until you feel resistance, then pull it sharply (Fig. 9). Allow the rope return to the handle slowly.

Note: Allow the engine to warm up for at least one minute; longer in cooler temperatures.

Note: If the engine fails to start after three attempts, repeat steps 2 through 4.

Stopping the Engine

Release the blade control bail (Fig. 11). Both the engine and the blade should stop. If they do not stop properly, contact your Authorized Service Dealer.

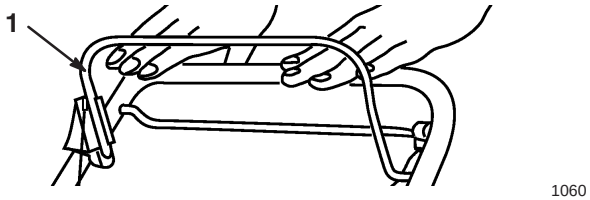

Figure 11

1. Blade control bail

Using the Self-propel Drive

1. To operate the self-propel drive, squeeze the self-propel drive bail against the handle and hold it (Fig. 12).

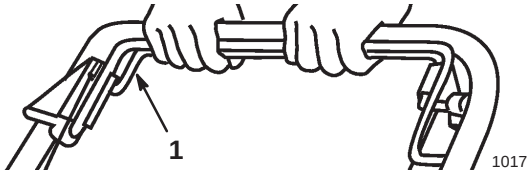

Figure 12

1. Self-propel drive bail

Note: The maximum self-propel ground speed is fixed. To reduce ground speed, increase the space between the bail and the handle.

2. To disengage the self-propel drive, release the self-propel drive bail (Fig. 13), then push the lawn mower forward manually at least one inch (2.5 cm).

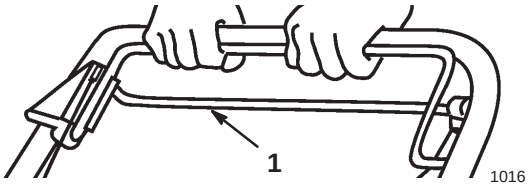

Figure 13

1. Self-propel drive bail

Adjusting the Cutting Height

Each wheel is adjusts individually with a wheel height adjustment lever. Cutting heights are 1 inch (25 mm); 1-1/2 inches (38 mm); 2 inches (51 mm); 2-1/2 inches (64 mm); 3 inches (76 mm); and 3-1/2 inches (89 mm).

DANGER

POTENTIAL HAZARD
- **Adjusting the height-of-cut levers could bring your hands into contact with a moving blade.**

WHAT CAN HAPPEN
- **Contact with a rotating blade can cause serious injury.**

HOW TO AVOID THE HAZARD
- **Stop the engine and wait for all movement to stop before adjusting the cutting height.**
- **Do not put fingers under the housing when adjusting the cutting height.**

1. Pull the wheel height adjustment lever toward the wheel and move it to the desired position (Fig. 14).

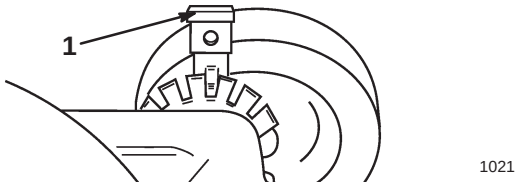

Figure 14

1. Wheel height adjustment lever

2. Release the wheel height adjustment lever and seat it securely in the desired notch.

Note: Set all four wheels at the same height.

Operating Tips

General Tips

- Review the safety instructions and read this manual carefully before operating the lawn mower.
- Clear the area of sticks, stones, wire, branches, and other debris which could be picked up or hit by the blade and become thrown objects.
- Keep everyone, especially children and pets, away from the area of operation.
- Avoid striking trees, walls, curbs, or other solid objects. Never deliberately mow over any object.
- If the lawn mower strikes an object or starts to vibrate, immediately stop the engine, disconnect the spark plug wire, and examine the lawn mower for damage.
- Maintain a **sharp blade** throughout the cutting season. Periodically file down nicks on the blade.
- Replace the blade when necessary with an original Toro replacement blade.
- Only mow dry grass or leaves. Wet grass and leaves tend to clump on the yard and may cause the lawn mower to plug or the engine to stall.

WARNING

POTENTIAL HAZARD
- **Wet grass or leaves can cause you to slip and contact the blade.**

WHAT CAN HAPPEN
- **Blade contact can seriously injure you.**

HOW TO AVOID THE HAZARD
- **Mow only in dry conditions.**

- Clean clippings or leaves from the underside of the lawn mower deck after each mowing. See *Cleaning the Underside of the Lawn Mower Housing* on page 14.
- Keep the engine in good running condition.

WARNING

POTENTIAL HAZARD
- **Operating a lawn mower with its engine running at a speed greater than the factory setting can cause an unsafe operating condition.**

WHAT CAN HAPPEN
- **The lawn mower could throw a part of the blade or engine into the operator's or bystander's area and cause serious personal injury or death.**

HOW TO AVOID THE HAZARD
- **Do not change the engine speed setting.**
- **If you suspect the engine speed is faster than normal, contact your Authorized Service Dealer.**

- Clean the air filter frequently. Mulching stirs up more clippings and dust which clogs the air filter and reduces engine performance.
- To achieve the best mulching action, set the lawn mower cutting height so the lawn mower cuts no more than a third of the grass blade or a maximum of one-inch- (25 mm) long clippings. If you try to mulch more or if the grass is very lush, the mulching action will be poor. Under these conditions, use the side discharge or grass catcher. A few days later, install the mulch plate on your lawn mower to resume mulching.

Cutting Grass

- In the summer heat, cut the grass at the 2, 2-1/2, or 3-inch (51, 64, or 76 mm) cutting height settings. Only cut off about one-third of the grass blade. Do not cut below the two-inch setting unless the grass is sparse or it is late autumn when the grass growth begins to slow down.
- When cutting grass over six inches (15 cm) tall, first mow using the highest cutting height setting and walking slower; then mow again at a lower setting for best lawn appearance. If the grass is too long and leaves clumps on top of the lawn, the lawn mower may plug up and cause the engine to stall.
- Alternate the mowing direction. This helps disperse clippings over the lawn for even fertilization.

If the finished lawn appearance is unsatisfactory, try one or more of the following:

- Sharpen the blade.
- Walk at a slower pace while mowing.
- Raise the cutting height on your lawn mower.
- Cut the grass more frequently.
- Overlap cutting swaths instead of cutting a full swath with each pass.
- Set the cutting height on the front wheels one notch lower than the rear wheels.

Cutting Leaves

- After cutting the lawn, make sure that half of the lawn shows through the cut leaf cover. You may need to make one or more passes over the leaves.
- For light leaf coverage, set all the wheels at the same cutting height setting.
- If there are more than five inches (12.7 cm) of leaves on the lawn, set the front wheels one or two notches higher than the rear wheels. This makes it easier to feed the leaves under the lawn mower deck.
- Slow down your mowing speed if the lawn mower does not cut the leaves finely enough.
- If you mow over oak leaves, you can add lime to the grass in the spring to reduce the acidity of the leaves.

Maintenance

Recommended Maintenance Schedule

Service Item	Service Operation	Each Use	5 Hours	25 Hours	50 Hours	100 Hours
Engine Oil	Check the engine oil before each use.	X				
	Drain and fill the engine crankcase with fresh oil after the first five hours of operation. Thereafter, change every 50 operating hours or yearly.				X	
Housing	Clean built-up grass clippings and dirt.	X				
Fasteners	Check the blade and the engine mounting fasteners. Keep all fasteners tight to keep the lawn mower in safe working condition.		X			
Air Filter	Replace the air filter each mowing season or every 25 operating hours. Replace it more frequently in dusty operating conditions.			X		
Blade	Sharpen or replace the blade; maintain it more frequently if the edge dulls quickly in rough or sandy conditions.				X	
Blade Brake	Check stopping time every 50 operating hours or at the start of each mowing season. The blade must stop within three seconds of releasing bail; if not, see your Authorized Service Dealer for repair.				X	
Self-propel Drive	Adjust the cable and grease the rear-height adjustor brackets every 50 operataing hours or yearly.				X	
Fuel System	Check for leaks and/or a deteriorating fuel hose. Replace it if necessary.				X	
Belt Cover	Remove and clean the grass, clippings and debris from under the cover.				X	
Spark Plug	Inspect and clean the spark plug. Replace it if necessary.					X
Cooling System	Clean the debris from the engine air cooling fins and starter. Clean it more frequently in dirty operating conditions.					X
Fuel Tank	Empty the fuel tank before certain repairs as directed or before storage.					

CAUTION

POTENTIAL HAZARD
- **If you leave the wire on the spark plug, someone could start the engine.**

WHAT CAN HAPPEN
- **Someone accidentally starting the engine could seriously injure you or other bystanders.**

HOW TO AVOID THE HAZARD
- **Disconnect the wire from the spark plug before you do any maintenance. Set the wire aside so that it does not accidentally contact the spark plug.**

Checking the Engine Oil Level

Before you use the lawn mower, make sure that the oil level is between the *Add* and the *Full* marks as shown on the dipstick (Fig. 7). If the oil level is below the *Add* mark, add oil. Refer to *Filling the Crankcase with Oil* on page 7.

Changing the Engine Oil

Change the oil after the first five operating hours and then after every 50 operating hours or every season. Run the engine just before changing the oil to warm the oil. Warm oil flows better and carries more contaminants.

Note: Change the oil after every 25 operating hours when operating under heavy load or in high temperatures.

WARNING

POTENTIAL HAZARD
- **Tipping the lawn mower may cause the fuel to leak from the carburetor or the fuel tank.**

WHAT CAN HAPPEN
- **Gasoline is extremely flammable, highly explosive and under certain conditions can cause personal injury or property damage.**

HOW TO AVOID THE HAZARD
- **Avoid fuel spills by running the engine dry or removing gasoline with a hand pump; never siphon.**

Draining the Oil above the Lawn Mower Deck

Note: Toro recommends this procedure for draining the engine oil.

1. Disconnect the wire from the spark plug (Fig. 29).
2. Drain the gasoline from the fuel tank; refer to steps 3 and 4 of *Emptying the Fuel Tank* on page 19.
3. Remove the dipstick from oil fill tube and place a drain pan next to the left side of the lawn mower.
4. Tip the lawn mower onto its **left** side, allowing the oil to drain into the drain pan (Fig. 15).

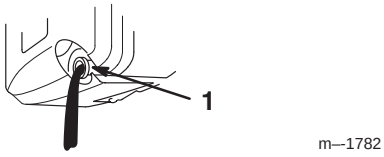

Figure 15

1. Oil fill tube

5. Turn the lawn mower upright.
6. Fill the crankcase with fresh oil to the *Full* mark on the dipstick. Refer to *Filling the Crankcase with Oil* on page 7.
7. Install the dipstick.
8. Wipe up any spilled oil.
9. Connect the wire onto the spark plug.
10. Recycle the used oil according to local codes.

Draining the Oil below the Lawn Mower Deck

Note: You need a 3/8-in. ratchet extension to perform this procedure.

WARNING

POTENTIAL HAZARD
- **The blade is sharp.**

WHAT CAN HAPPEN
- **Contact with a sharp blade can cause serious personal injury.**

HOW TO AVOID THE HAZARD
- **Wear gloves or wrap the sharp edges of the blade with a rag.**

1. Disconnect the wire from the spark plug (Fig. 29).
2. Drain the gasoline from the fuel tank; refer to steps 3 and 4 of *Emptying the Fuel Tank* on page 19.
3. Tip the lawn mower onto its **left** side and secure it to prevent it from falling.
4. Place a drain pan under the lawn mower.
5. Remove the oil drain plug, return the lawn mower to its operating position, and allow the oil to drain into the drain pan (Fig. 16).

IMPORTANT: You may need to move the blade to get to the oil drain plug. Move the blade as little as possible to avoid future starting problems.

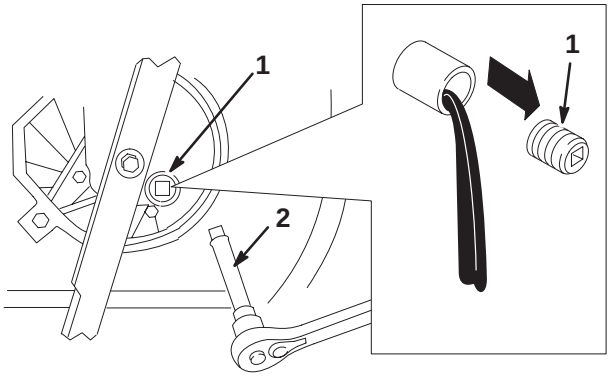

Figure 16

1. Oil drain plug
2. 3/8-in. Ratchet extension

6. Tip the lawn mower onto its **left** side and install the oil drain plug.
7. Fill the crankcase with fresh oil to the *Full* mark on the dipstick. Refer to *Filling the Crankcase with Oil* on page 7**.**
8. Wipe up any spilled oil.
9. Connect the wire onto the spark plug.
10. Recycle the used oil according to local codes.

Cleaning the Underside of the Lawn Mower Housing

Keep the underside of the lawn mower housing clean. Be especially careful to keep the kickers free of debris (Fig. 17).

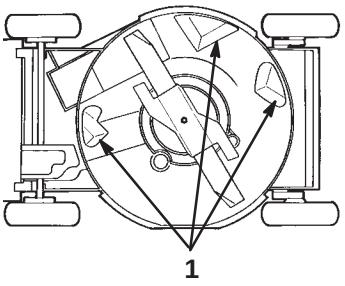

757

Figure 17

1. Kickers

Washing Method

1. Move the lawn mower on a flat concrete or asphalt surface near a garden hose.
2. Start the engine.
3. Hold the running garden hose at handle level and direct the water to flow on the ground just in front of the right rear tire (Fig. 18).

   The blade will draw in water and wash out the clippings. Let the water run until the clippings no longer come out from under the housing.

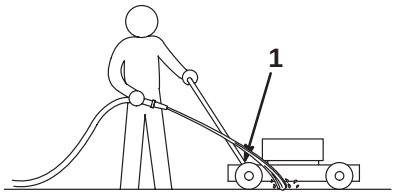

1093

Figure 18

1. Rear right wheel

4. Stop the engine and wait for all moving parts to stop.
5. Turn off the garden hose.
6. Start the lawn mower and let it run for a few minutes to dry it off.
7. While the engine runs, engage and disengage the traction drive several times to dry it out.

Scraping Method

If washing does not remove all the debris from under the deck, tip the lawn mower and scrape it clean.

1. Disconnect the wire from the spark plug (Fig. 29).
2. Drain the gasoline from the fuel tank; refer to steps 3 and 4 of *Emptying the Fuel Tank* on page 19.
3. Tip the lawn mower onto its **left** side with the air filter up.

4. Remove the dirt and grass clippings with a hardwood scraper. Avoid burrs and sharp edges.

IMPORTANT: Move the blade as little as possible to avoid future starting problems.

5. Turn the lawn mower upright.
6. Fill the fuel tank.
7. Connect the wire on the spark plug.

Replacing the Air Filter

Replace the air filter after every 25 operating hours. Replace the air filter more frequently when you operate the lawn mower in dusty or dirty conditions. See your Authorized Service Dealer for replacement parts.

Models 20010, 20020, and 20021

1. Stop the engine and wait for all moving parts to stop.
2. Disconnect the wire from the spark plug (Fig. 29).
3. Loosen the screw that secures the air filter cover to the engine (Fig. 19).

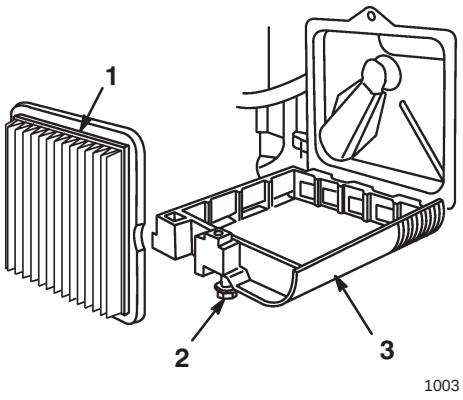

Figure 19

1. Air filter
2. Screw
3. Cover

4. Tilt the air cleaner cover down and clean the cover thoroughly (Fig. 19).
5. Remove and discard the paper air cleaner filter (Fig. 19).

IMPORTANT: Do not try to clean a paper filter.

6. Insert a new paper air cleaner filter.
7. Install the air cleaner cover and secure it with a screw.

IMPORTANT: Do not operate the engine without the air filter element; extreme engine wear and damage can occur.

Model 20028

1. Stop the engine and wait for all moving parts to stop.
2. Disconnect the wire from the spark plug (Fig. 29).
3. Loosen the screw that secures the air filter cover to the engine (Fig. 19).

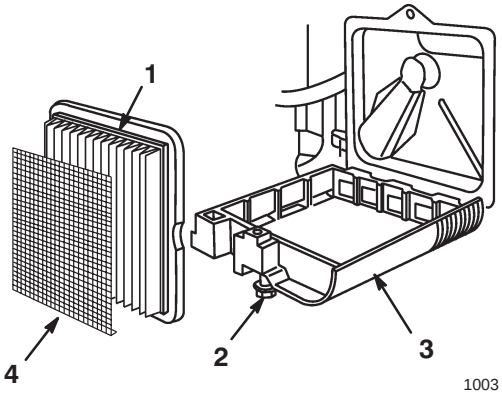

Figure 20

1. Air filter
2. Screw
3. Cover
4. Pre-cleaner

4. Tilt the air cleaner cover down and clean the cover thoroughly (Fig. 19).
5. Remove the pre-cleaner, wash it in liquid detergent and water, and let it thoroughly dry.

Note: Do not oil the pre-cleaner; replace it if it is very dirty or is damaged.

6. Remove and discard the paper air cleaner filter (Fig. 19).

IMPORTANT: Do not try to clean a paper filter.

7. Insert a new paper air cleaner filter.
8. Insert the pre-cleaner over the pleats in the air filter (the pre-cleaner lip should be at the bottom of the pleats).
9. Install the air cleaner cover and secure it with a screw.

IMPORTANT: Do not operate the engine without the air filter element; extreme engine wear and damage can occur.

Maintaining the Blade

Always mow with a straight, sharp blade. A sharp blade cuts cleanly and without tearing or shredding the grass blades like a dull blade.

WARNING

POTENTIAL HAZARD
- **The blade is sharp.**

WHAT CAN HAPPEN
- **Contact with a sharp blade can cause serious personal injury.**

HOW TO AVOID THE HAZARD
- **Wear gloves or wrap the sharp edges of the blade with a rag.**

1. Stop the engine and wait for all moving parts to stop.
2. Disconnect the wire from the spark plug (Fig. 29).

WARNING

POTENTIAL HAZARD
- **Tipping the lawn mower may cause the fuel to leak from the carburetor or the fuel tank.**

WHAT CAN HAPPEN
- **Gasoline is extremely flammable, highly explosive and under certain conditions can cause personal injury or property damage.**

HOW TO AVOID THE HAZARD
- **Avoid fuel spills by running the engine dry or removing gasoline with a hand pump; never siphon.**

3. Drain the gasoline from the fuel tank; refer to steps 3 and 4 of *Emptying the Fuel Tank* on page 19.
4. Tip the lawn mower onto its left side (Fig. 21).

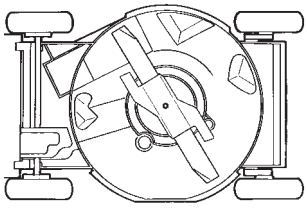

757

Figure 21

IMPORTANT: Move the blade as little as possible to avoid future starting problems.

Inspecting the Blade

Carefully examine the blade for sharpness and wear, especially where the flat and the curved parts meet (Fig. 22A). Because sand and abrasive material can wear away the metal that connects the flat and curved parts of the blade, check the blade before using the lawn mower. If you notice a slot or wear (Figs. 22B and 22C), replace the blade; refer to *Removing the Blade* on page 17.

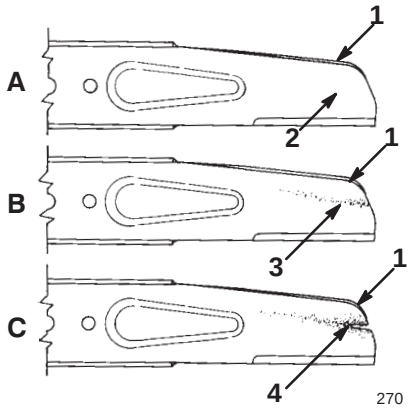

Figure 22

1. Sail
2. Flat part of blade
3. Wear
4. Slot formed

Note: For the best performance, install a new blade before the cutting season begins. During the year, file down any small nicks to maintain the cutting edge.

DANGER

POTENTIAL HAZARD
- **A worn or damaged blade can break and a piece of the blade could be thrown into the operator's or bystander's area.**

WHAT CAN HAPPEN
- **A thrown piece of the blade could cause serious personal injury or death to the operator or bystanders.**

HOW TO AVOID THE HAZARD
- **Inspect the blade periodically for wear or damage.**
- **Replace a worn or damaged blade.**

Removing the Blade

Grasp the end of the blade using a rag or thickly padded glove. Remove the blade bolt, the lock washer, the accelerator, and the blade (Fig. 23).

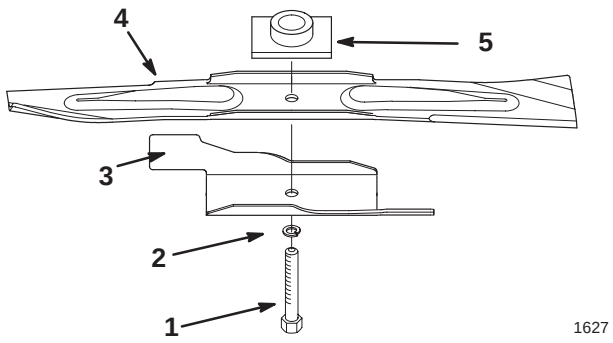

Figure 23

1. Blade bolt
2. Lock washer
3. Accelerator
4. Blade
5. Blade driver

Sharpening the Blade

File the top side of the blade to maintain its original cutting angle (Fig. 24A) and inner cutting edge radius (Fig. 24B). The blade will remain balanced if you remove the same amount of material from both cutting edges.

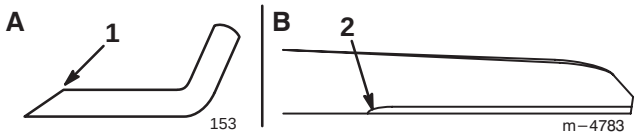

Figure 24

1. Sharpen at this angle only
2. Maintain the original radius here

Note: The blade will remain balanced if you remove the same amount of material from both cutting edges.

Balancing the Blade

1. Check the balance of the blade by placing the center hole of the blade over a nail or a screwdriver shank clamped horizontally in a vise (Fig. 25).

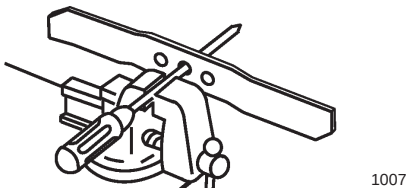

Figure 25

Note: You can also check the balance by using a commercially manufactured blade balancer.

2. If either end of the blade rotates downward, file that end (not the cutting edge or the end near the cutting edge). The blade is properly balanced when neither end drops.

Installing the Blade

1. Install the blade onto the spindle and the blade driver with the curved blade tips pointing toward the lawn mower deck and the blade driver nesting in the recess of the blade (Fig. 23).

2. Install the accelerator, the lock washer, and the blade bolt (Fig. 23).

3. Tighten the blade bolt to 50 ft-lb (68 N·m).

WARNING

POTENTIAL HAZARD

- **Operating the lawn mower without the accelerator in place can cause the blade to flex, bend, or break.**

WHAT CAN HAPPEN

- **A broken blade could cause serious injury or death to the operator or bystanders.**

HOW TO AVOID THE HAZARD

- **Do not operate the lawn mower without the accelerator.**

Lubricating the Self-propel Drive

1. Wipe the grease fittings on the rear wheel height adjustment levers with a clean rag (Fig. 26).

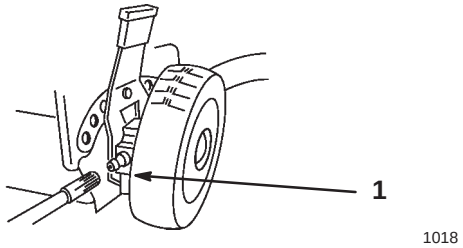

Figure 26

1. Grease fitting

2. Install a grease gun onto each fitting in turn and gently apply one or two pumps of #2 multi-purpose lithium grease to each.

IMPORTANT: Excess grease may prevent the wheel clutch from properly operating.

Adjusting the Self-propel Drive Cable

Whenever you change the handle height, install a new self-propel drive cable, or the traction drive belt slips, adjust the self-propel drive cable.

You adjust the self-propel drive cable on the handle by moving the cable jacket held by the cable support.

1. Loosen the nut on the cable support (Fig. 27).

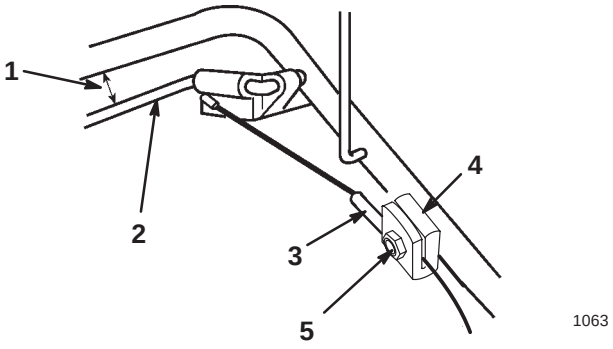

Figure 27

1. 1 to 1 1/2 in. (25 to 38 mm)
2. Self-propel drive bail
3. Cable jacket
4. Cable support
5. Nut

2. Hold the self-propel drive bail 1 to 1 1/2 in. (25 to 38 mm) from the handle (Fig. 27).

3. Pull the cable jacket down (away from the bail).

4. Tighten the nut on the cable support.

5. Release the bail and ensure that the cable is loose.

Note: The cable must be loose when the self-propel drive bail is in the disengaged position to prevent the lawn mower from creeping forward when you disengage the bail.

Cleaning under the Belt Cover

Keep the area under the belt cover free of debris.

1. Stop the engine and wait for all moving parts to stop.

2. Remove the bolts that secure the belt cover to the lawn mower housing (Fig. 28).

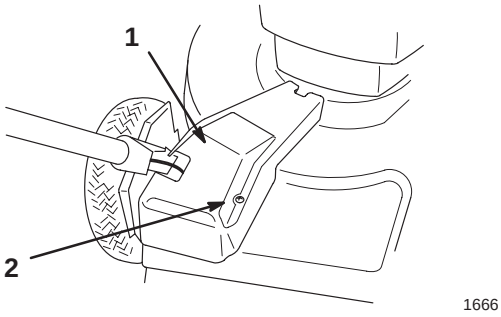

Figure 28

1. Belt cover
2. Bolt

3. Lift off the cover and brush out all the debris from the belt area.

4. Install the belt cover.

Replacing the Spark Plug

Check the spark plug after every 25 operating hours. Use a *Champion RJ19LM* spark plug or equivalent.

1. Stop the engine and wait for all moving parts to stop.

2. Disconnect the wire from the spark plug (Fig. 29).

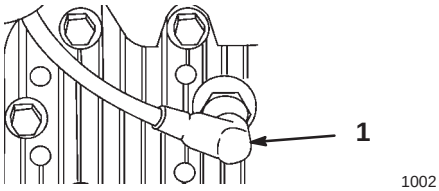

Figure 29

1. Spark plug wire

3. Clean around the spark plug.

4. Remove the spark plug from the cylinder head.

IMPORTANT: Replace a cracked, fouled, or dirty spark plug. Do not clean the electrodes because grit entering the cylinder can cause engine damage.

5. Set the gap on the new plug to 0.030 in. (0.76 mm) (Fig. 30).

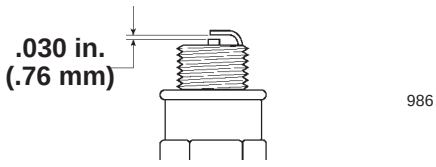

Figure 30

1. 0.030 in. (.76 mm)

6. Install the spark plug and the gasket seal.

7. Torque the spark plug to 20 N·m (15 ft-lb).
8. Connect the wire to the spark plug.

Emptying the Fuel Tank

1. Stop the engine and wait for it to cool down.
2. Disconnect the wire from the spark plug (Fig. 29).
3. Remove the cap from the fuel tank.
4. Use a hand pump to syphon the fuel into a clean approved gasoline container.
5. Connect the wire to the spark plug.
6. Run the engine until it stops.
7. Start the engine again to make sure that all the gasoline is out of the carburetor.

Troubleshooting

Toro designed and built your lawn mower for trouble-free operation. Check the following components and items carefully. If a problem continues, see your Authorized Service Dealer.

PROBLEM	CORRECTIVE ACTION
Engine will not start	1. Fill the fuel tank with fresh gasoline. 2. Press the primer three times. 3. Connect the spark plug wire. 4. Clean the spark plug, check the spark plug gap, and replace the spark plug if it is damaged.
Engine starts hard or loses power	1. Drain and fill the fuel tank with fresh gasoline. 2. Clean the gasoline cap vent hole. 3. Clean the air filter. 4. Clean the lawn mower discharge chute. 5. Clean the underside of the lawn mower deck. 6. Clean the spark plug, check the spark plug gap, and replace the spark plug if it is damaged. 7. Check the engine oil.
Engine runs rough	1. Connect the spark plug wire. 2. Clean the spark plug, check the spark plug gap, and replace the spark plug if it is damaged. 3. Clean the air filter.
Lawn mower or engine vibrates excessively	1. Balance the blade. 2. Tighten the blade mounting nut. 3. Clean the lawn mower discharge chute. 4. Clean the underside of the lawn mower deck. 5. Tighten the engine mounting bolts.
Uneven cutting pattern	1. Place all four wheels at the same height. 2. Sharpen and balance the blade. 3. Change the mowing pattern. 4. Clean the underside of lawn mower deck.

PROBLEM	CORRECTIVE ACTION
Discharge chute plugs	1. Raise the cutting height. 2. Allow the grass to dry before mowing. 3. Clean the underside of the lawn mower deck.
Lawn Mower will not self-propel	1. Adjust the self-propel drive cable. 2. Clean the debris under the belt cover.

Storage

To prepare the lawn mower for off-season storage, perform the recommended maintenance procedures. Refer to *Maintenance* on page 12.

Store the lawn mower in a cool, clean, dry place. Cover the lawn mower to keep it clean and protected.

Preparing the Fuel System

WARNING

POTENTIAL HAZARD
- **Gasoline can vaporize if you store it over long periods of time.**

WHAT CAN HAPPEN
- **Vaporized gasoline can explode if it comes into contact with an open flame.**

HOW TO AVOID THE HAZARD
- **Do not store gasoline over long periods of time.**
- **Do not store the lawn mower with gasoline in the fuel tank or the carburetor in an enclosure with an open flame. (For example, a furnace or a water heater pilot light.)**
- **Allow the engine to cool before storing it in any enclosure.**

Empty the fuel tank when mowing the last time before storing the lawn mower.

1. Run the lawn mower until the engine stops from running out of fuel.
2. Prime the engine and start it again.
3. Allow the engine to run until it stops. When you can no longer start the engine, it is sufficiently dry.

Preparing the Engine

1. While the engine is still warm, drain the oil from the crankcase. Refer to *Changing the Engine Oil* on page 13.
2. Remove the spark plug (Fig. 29).
3. Using an oil can, add about one tablespoon of oil to the crankcase through the spark plug hole (Fig. 31).

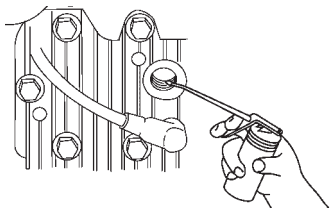

1009

Figure 31

4. Slowly rotate the engine several times, using the starter rope, to distribute the oil.
5. Install the spark plug but **do not** install the spark plug wire.

General Information

1. Clean the lawn mower housing. Refer to *Cleaning the Underside of the Lawn Mower Housing* on page 14.
2. Clean any dirt and chaff from the cylinder, cylinder head fins, and blower housing.
3. Remove grass clippings, dirt, and grime from the external parts of the engine, the shrouding, and the top of the lawn mower housing.
4. Check the condition of the blade. Refer to *Maintaining the Blade* on page 15.
5. Tighten all nuts, bolts, and screws.
6. Lubricate the wheels. Refer to *Lubricating the Self-propelled Drive* on page 17.

7. Touch up all rusted or chipped paint surfaces with paint available from an Authorized Service Dealer.

Folding the Handle

WARNING

POTENTIAL HAZARD
- **Folding or unfolding the handle improperly can pinch, stretch, or damage one or more of the cables.**

WHAT CAN HAPPEN
- **Any pinched, stretched, or damaged cable may cause an operational failure that results in an unsafe operating condition.**

HOW TO AVOID THE HAZARD
- **Do not pinch, stretch, or damage the cables.**
- **Handle the cables with care when folding or unfolding the handle.**
- **Do not use the lawn mower if one or more of the cables are pinched, stretched, or damaged. Contact your Authorized Service Dealer.**

1. Push in the right bottom handle section until the handle slides past the stops on the handle brackets (Fig. 32).

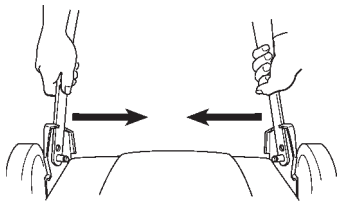

1039

Figure 32

2. Rotate the handle toward the front of the lawn mower (Fig. 33).

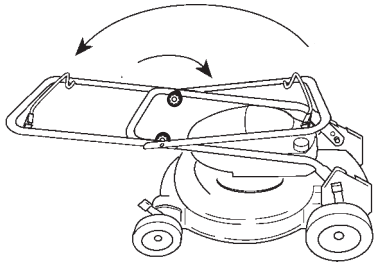

1679

Figure 33

3. Loosen the knobs that secure the top handle section to the bottom section and fold the top handle section back toward the rear of the mower into the storage position (Fig 33).

Note: For short term storage, place the handle in the position shown in Figure 34.

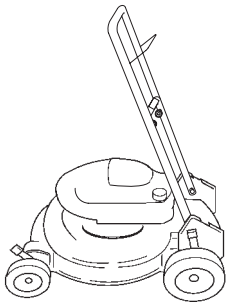

1684

Figure 34

Removing from Storage

WARNING

POTENTIAL HAZARD
- **Folding or unfolding the handle improperly can pinch, stretch, or damage one or more of the cables.**

WHAT CAN HAPPEN
- **Any pinched, stretched, or damaged cable may cause an operational failure that results in an unsafe operating condition.**

HOW TO AVOID THE HAZARD
- **Do not pinch, stretch, or damage the cables.**
- **Handle the cables with care when folding or unfolding the handle.**
- **Do not use the lawn mower if one or more of the cables are pinched, stretched, or damaged. Contact your Authorized Service Dealer.**

1. Carefully unfold the upper handle until it nests with the lower handle, then tighten the knobs.
2. Check and tighten all fasteners.
3. Remove the spark plug (Fig. 29) and spin the engine rapidly using the starter to remove the excess oil from the cylinder.
4. Clean the spark plug or replace it if it is cracked, broken, or if the electrodes are worn.
5. Install the spark plug and torque it to 15 ft-lb (20 N·m).
6. Perform the recommended maintenance procedures; refer to *Maintenance* on page 12.
7. Fill the fuel tank (Fig. 8) with fresh gasoline.
8. Check the engine oil level. Refer to *Checking the Engine Oil Level* on page 13.

9. Connect the wire onto the spark plug.

Accessories

Your lawn mower may include accessories available from your Authorized Service Dealer. For proper installation of these accessories, follow these instructions.

Rear Grass Catcher

Installing the Discharge Tunnel

1. Stop the engine and wait for all moving parts to stop.

2. Disconnect the wire from the spark plug (Fig. 29).

3. Remove the knob and side cover clamp (Fig. 35).

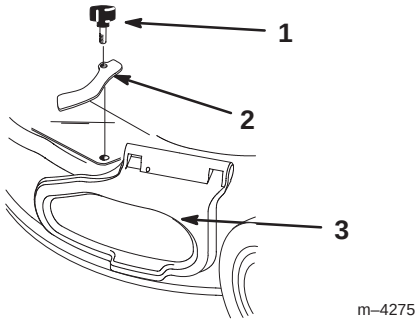

Figure 35

1. Knob
2. Side cover clamp
3. Side opening cover

4. Remove and save the three bolts that secure the discharge cover to the lawn mower (Fig. 36). Save the cover and bolts for future use.

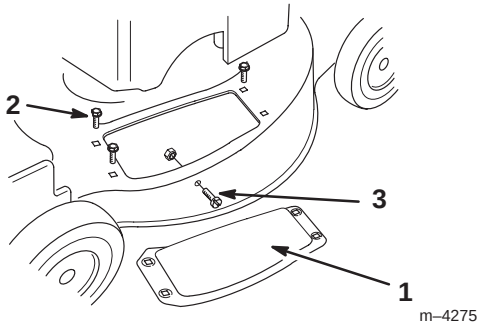

Figure 36

1. Discharge cover
2. Bolt (3)
3. Screw and nut

5. Remove the screw and nut from side of the lawn mower (Fig. 36). Save them for future use.

6. Install four grommets supplied with the grass catcher into the four square holes in the lawn mower (Fig. 37).

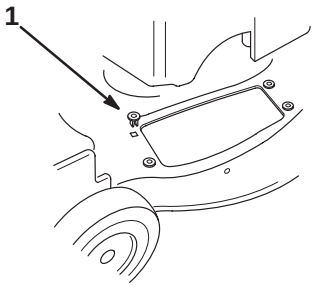

Figure 37

1. Grommet (4)

7. Insert the tongue of the discharge tunnel into the lawn mower (Fig. 38).

8. Align the holes in the tunnel with the grommets in the lawn mower (Fig. 38).

9. Ensure that the hole in the tongue aligns with the hole in the side of the lawn mower (Fig. 38).

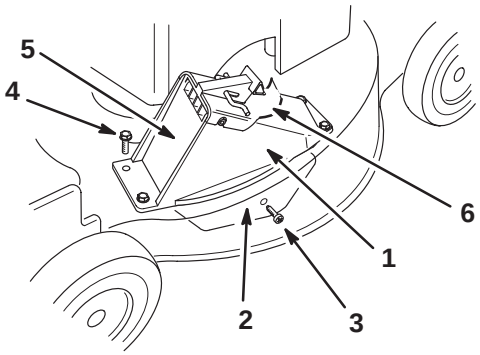

Figure 38

1. Discharge tunnel
2. Tongue
3. Self-tapping screw
4. Bolt (3)
5. Discharge tunnel door
6. Brush guard

10. Install the self-tapping plastite screw supplied with the grass catcher into the side hole and tongue, and partially tighten the screw (Fig. 38).

11. Using three screws supplied with the grass catcher, fasten the discharge tunnel to the lawn mower (Fig. 38).

12. Secure the front right corner of the discharge tunnel and the side opening cover with the side cover clamp removed previously and the long knob supplied with the grass catcher (Fig. 39)

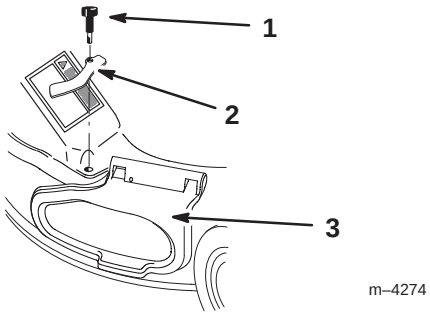

Figure 39

1. Long knob
2. Side cover clamp
3. Side opening cover

DANGER

POTENTIAL HAZARD
- **If the side opening cover is not securely clamped in place, the lawn mower can throw debris out of the side opening.**

WHAT CAN HAPPEN
- **Thrown debris can cause serious personal injury or death to the operator or bystanders.**

HOW TO AVOID THE HAZARD
- **Always ensure that either the side opening cover is closed and locked in place by the side cover clamp or that the side discharge chute is securely seated in place before starting the lawn mower.**

13. Tighten all four screws and the long knob.

14. Open and close the tunnel door to ensure that it moves freely (Fig. 38).

Installing the Grass Bag

Note: To recycle grass instead of catch it, do not install the grass bag and ensure that the discharge tunnel door is closed and secured.

DANGER

POTENTIAL HAZARD
- **Thrown objects may result if the discharge door does not close completely.**

WHAT CAN HAPPEN
- **Thrown objects can cause serious personal injury or death.**

HOW TO AVOID THE HAZARD
- **If the discharge door cannot be closed because grass clippings clog the discharge area, stop the engine and gently move the discharge door handle back and forth until the door can be closed completely. If door still cannot be closed, remove the obstruction with a stick; not your hand.**

1. Stop the engine and wait for all moving parts to stop.

2. Ensure that the discharge door handle is fully forward (door closed) as shown in Figure 40.

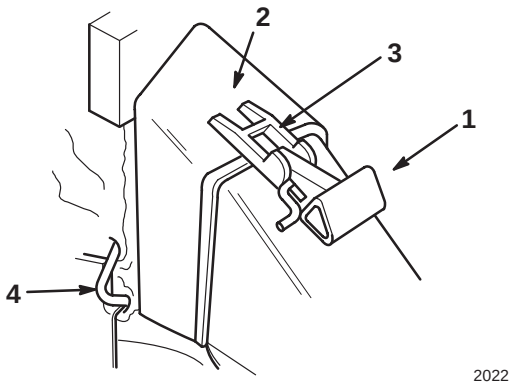

Figure 40

1. Handle fully forward
2. Bag door
3. Bag door latch
4. Bag rod hook in front of handle bracket

Note: In Figure 40, the brush guard is not shown for the purpose of clarity.

3. Fit the bag door opening over the discharge tunnel opening as shown in Figure 40.

The bag door latches should straddle the door handle, and the bag rod hook should be in front of the handle bracket.

4. Set the rear of the bag frame onto the lower handle.

5. Pull the handle rearward until the handle latch locks in the notch in the bag door latch (Fig. 41).

   The discharge door in the lawn mower housing is now open and the bag is locked into position. The latch should seat in the bottom of the notch.

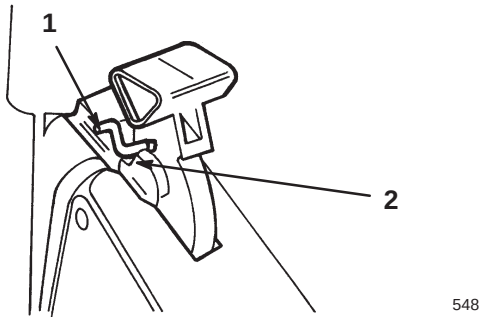

Figure 41

1. Handle latch locked in bag notch
2. Notch in bag door latch

Note: In Figure 41, the brush guard is not shown for the purpose of clarity.

DANGER

POTENTIAL HAZARD
- **Grass clippings and other objects can be thrown from an open discharge tunnel.**

WHAT CAN HAPPEN
- **Objects thrown with enough force could cause serious personal injury or death to the operator or bystander.**

HOW TO AVOID THE HAZARD
- **Never open the door on the discharge tunnel when the engine is running.**

DANGER

POTENTIAL HAZARD
- **A worn grass bag could allow small stones and other similar debris to be thrown in operator's or bystander's direction.**

WHAT CAN HAPPEN
- **Thrown objects can cause serious personal injury or death to the operator or bystanders.**

HOW TO AVOID THE HAZARD
- **Check the grass bag frequently. If it is damaged, install a new genuine Toro replacement bag that has this or a similar warning.**

Emptying the Grass Bag

1. Stop the engine and wait for all moving parts to stop.
2. Lift the door latch until it clears the bag notch and move the discharge door handle forward (Fig. 40).
3. Grasp the bag frame handle and the rear of the grass bag and lift the bag off the lawn mower.
4. Gradually tip the bag forward to empty clippings.

Side Discharge Chute

Installing the Side Discharge Chute

1. Stop the engine and wait for all moving parts to stop.
2. Disconnect the wire from the spark plug (Fig. 29).
3. Remove the knob and side cover clamp, then replace the knob in the hole and save the clamp for future use (Fig. 35).
4. Lift up on the side opening cover (Fig. 35).
5. Slide the chute over the opening with the slots in the chute lined up with the tabs under the cover (Fig. 42).

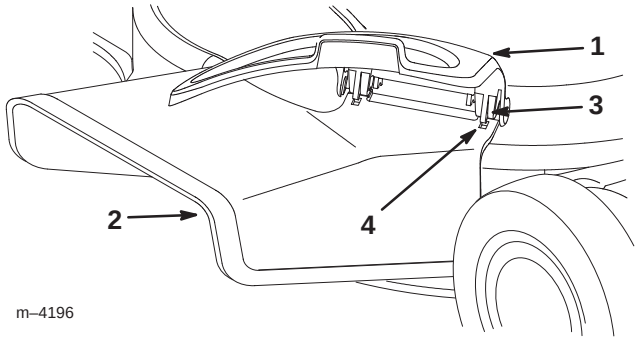

Figure 42

1. Side opening cover
2. Side discharge chute
3. Tab
4. Slot

6. Close the cover.

Removing the Side Discharge Chute

1. Stop the engine and wait for all moving parts to stop.
2. Disconnect the wire from the spark plug (Fig. 29).
3. Open the side opening cover and remove the side discharge chute (Fig. 42).
4. Close the cover.
5. Remove the knob, then install the side cover clamp and the knob, securing the side opening cover (Fig. 35 and 43).

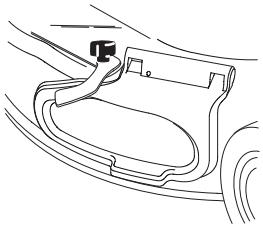

m–4279

Figure 43

DANGER

POTENTIAL HAZARD

- **If the side opening cover is not securely clamped in place, debris could be thrown out of the side opening.**

WHAT CAN HAPPEN

- **Thrown debris can cause serious personal injury or death to the operator or bystanders.**

HOW TO AVOID THE HAZARD

- **Always ensure that either the side opening cover is closed and locked in place by the side cover clamp or that the side discharge chute is securely seated in place before starting the lawn mower.**

Using the Discharge Tunnel Plug

1. Stop the engine and wait for all moving parts to stop.
2. Disconnect the wire from the spark plug (Fig. 29)
3. Open the discharge door by moving handle rearward (Fig. 44) and hold it open while inserting the plug.

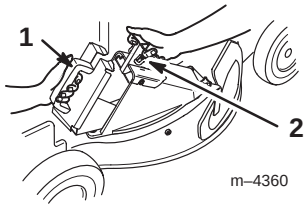

m–4360

Figure 44

1. Plug
2. Discharge door handle

4. Insert the plug into the discharge tunnel opening and fit the lower section into the opening first (Fig. 45).

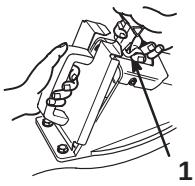

2012

Figure 45

1. Door latch

5. Lift the door latch on the door handle (Fig. 45), and push the top of the plug all the way in while moving the door handle rearward.
6. Release the door latch, allowing it to hook over the tabs on the plug (Fig. 46).

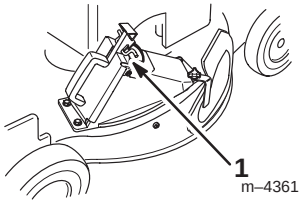

m–4361

Figure 46

1. Tab (2)

7. To remove the plug, pull up on the door latch and hold discharge door fully open. When the plug is unlocked, pull it out of the discharge tunnel.

It is Toro's policy to design and produce high quality products. To ensure customer satisfaction, Toro has extensive warranty coverage on its products. Your Toro GTS Engine powered product has two warranty statements covering it. The Toro Total Coverage Guarantee is our standard warranty statement and is printed on the last page of this manual.

In addition to The Toro Total Coverage Guarantee, we are so confident that the Toro GTS Engine will provide a high level of performance and durability that we are providing a *Starting Guarantee!* Please read the details of this additional warranty coverage printed below.

THE TORO STARTING GUARANTEE

A Two Year Limited Warranty on All GTS−2 Engines

What Is Covered?

The Toro Company guarantees that your GTS−2 Engine will start on the first or second pull for two years from the date of purchase—if you provide the routine maintenance it requires—or we will fix it. The cost of parts and labor are included, but you must pay transportation costs. This covers GTS−2 engines on Toro rotary mowers.

What Must You Do To Keep The Warranty In Effect?

You must maintain your GTS−2 Engine by following the maintenance schedule detailed in the operator's manual, at your expense. You must record this work in the maintenance chart provided in your owner's manual and keep your proof of purchase.

How Do You Get Service?

If the starting performance of your GTS−2 Engine should diminish to the point where it will not start in one or two pulls by a normal, able−bodied adult, you should follow the procedures below:

1. Contact any Authorized Toro Service Dealer, Toro Master Service Dealer, or Toro Distributor (the Yellow Pages of your telephone directory is a good reference source).
2. He will either instruct you to return the product to him or recommend another Authorized Toro Service outlet which might be more convenient.
3. Bring the product, your maintenance records, and proof of purchase to the Service Dealer.

If, for any reason, you are dissatisfied with the Dealer's analysis of your engine's starting condition, or the assistance provided, please feel free to contact us:

Toro Customer Service Department
8111 Lyndale Avenue South
Minneapolis, Minnesota 55420

What Does This Warranty Not Cover?

This Warranty does not cover:

1. Any repairs on products used commercially.
2. Normal maintenance including replacement of spark plugs, air filter, fuel filter, and carburetor adjustments.
3. Oil change and lubrication.
4. Repairs or adjustments due to:
   a. Failure to follow proper maintenance procedures;
   b. Rotary mower blade striking an object;
   c. Contaminants in the fuel system;
   d. Improper fuel or fuel mixture (consult your owner's manual if in doubt);

e. Failure to drain the fuel system prior to any period of non−use over three months;

f. Operation misuse, neglect or accidents;

g. Repairs or attempted repairs by anyone other than an Authorized Toro Service Dealer.

5. Special operational conditions where starting may require more than two pulls, including:

a. First time starts after extended period of non−use or seasonal storage;

b. Cool temperature starts such as those found in early spring and late fall may require an additional pull or two;

c. Improper starting procedures. If you are having difficulty starting your unit, please check the operator's manual to ensure you are using the correct starting procedures. This can save an unnecessary visit to a Service Dealer.

All warranty repairs reimbursable under this warranty must be performed by an Authorized Toro Service Dealer using Toro approved replacement parts.

The above remedy through repair by an Authorized Toro Service Dealer is the purchaser's sole remedy.

How Does State Law Relate To This Warranty?

There is no other express warranty except for The Toro Total Coverage Guarantee. All implied warranties of merchantability (that the product is fit for ordinary use) and fitness for use (that the product is fit for a particular purpose) are limited to the duration of the express warranty.

Some states do not allow limitation on how long implied warranties last, so the above exclusion may not apply to you.

The Toro Company is not liable for indirect, incidental or consequential damages in connection with the use of the product, including any cost or expense of providing substitute equipment or service during periods of malfunction or non−use.

Some states do not allow exclusions of incidental or consequential damages, so the above exclusion may not apply to you.

This warranty gives you specific legal rights, and you may also have other rights which vary from state to state.

Guaranteed to Start Maintenance Record

To keep the starting guarantee in effect, you must perform the following maintenance after every 25 operating hours, more often in dusty and dirty conditions. Follow the procedures in this Operator's Manual and record information on this chart.

Date	Hours Used	Air Cleaner Service	Change Oil Doesn't Apply to 2−Cycle	Lubricate Wheels	Check Spark Plug	Mower Storage

Gas, Cordless, Electric, and 21" Commercial Duty Walk Mowers

The Toro Total Coverage Guarantee

A Full Warranty
(Limited Warranty for Commercial Use)

Conditions and Products Covered

The Toro Company and its affiliate, Toro Warranty Company, pursuant to an agreement between them, jointly promise to repair any Toro Product used for normal residential purposes* if defective in materials or workmanship or if it stops functioning due to the failure of a component. The following time periods apply from the date of purchase:

Products	Warranty Period
• Super Recycler® Walk Mowers	5 year full warranty
• VacuPower® Walk Mowers	5 year full warranty
• All Others	2 year full warranty

This warranty includes the cost of parts and labor, but you must pay transportation costs.

This warranty applies to all gas, cordless, and electric consumer walk power mowers.

* Normal residential purposes means use of the product on the same lot as your home. Use at more than one location is considered commercial use, and the commercial use warranty would apply.

Limited Warranty for Commercial Use

Toro Walk Power Mowers used for commercial, institutional, or rental use are warranted against defects in materials or workmanship. Components failing due to normal wear are not covered by this warranty. The following time periods apply from the date of purchase:

Products	Warranty Period	
	Engine	Entire Unit
• 21" Commercial Duty Walk Mowers	2 year limited	1 year limited
• All Others	45 day limited	45 day limited

Instructions for Obtaining Warranty Service

Should you feel your Toro Product contains a defect in materials or workmanship, contact the dealer who sold you the product or any Authorized Service Dealer or Master Service Dealer. The Yellow Pages of your telephone directory is a good reference source. The dealer will either arrange service at his/her dealership or recommend another Authorized Service Dealer who may be more convenient. You may need proof of purchase (copy of registration card, sales receipt, etc.) for warranty validation.

If for any reason you are dissatisfied with the Service Dealer's analysis of the defect in materials or workmanship or if you need a referral to a Toro Service Dealer, please feel free to contact us at:

Customer Service Department
Toro Warranty Company
8111 Lyndale Avenue South
Bloomington, MN 55420-1196
612-888-8801
800-348-2424

Owner Responsibilities

You must maintain your Toro Product by following the maintenance procedures described in the operator's manual. Such routine maintenance, whether performed by a dealer or by you, is at your expense.

Items and Conditions Not Covered

There is no other express warranty except for special emission system coverage on some products and the Toro Starting Guarantee on GTS Engine. This express warranty does not cover:

- Cost of regular maintenance service or parts, such as filters, fuel, lubricants, oil changes, spark plugs, blade sharpening, worn blade, cable/linkage adjustments, or brake and clutch adjustments.
- Any product or part which has been altered or misused or required replacement or repair due to accidents or lack of proper maintenance.
- Repairs necessary due to improper fuel, contaminants in the fuel system, or failure to properly prepare the fuel system prior to any period of non-use over three months.
- Repairs necessary due to improper battery care, electrical supply irregularities, or failure to properly prepare the mower prior to any period of non-use.
- Pickup and delivery charges.

All repairs covered by this warranty must be performed by an Authorized Toro Service Dealer using Toro approved replacement parts.

General Conditions

Repair by an Authorized Toro Service Dealer is your sole remedy under this warranty.

Neither The Toro Company nor Toro Warranty Company is liable for indirect, incidental or consequential damages in connection with the use of the Toro Products covered by this warranty, including any cost or expense of providing substitute equipment or service during reasonable periods of malfunction or non-use pending completion of repairs under this warranty. Some states do not allow exclusions of incidental or consequential damages, or limitations on how long an implied warranty lasts, so the above exclusions and limitations may not apply to you.

This warranty gives you specific legal rights, and you may also have other rights which vary from state to state.

Countries Other than the United States or Canada

Customers who have purchased Toro products exported from the United States or Canada should contact their Toro Distributor (Dealer) to obtain guarantee policies for your country, province, or state. If for any reason you are dissatisfied with your Distributor's service or have difficulty obtaining guarantee information, contact the Toro importer. If all other remedies fail, you may contact us at Toro Warranty Company.

Rev. 11/08/1999