TORO

MODEL 57002 - 90001 & UP (905)
MODEL 57051 - 90001 & UP (910)

1969 PARTS CATALOG

905 AND 910 LAWN TRACTOR 5 H.P.

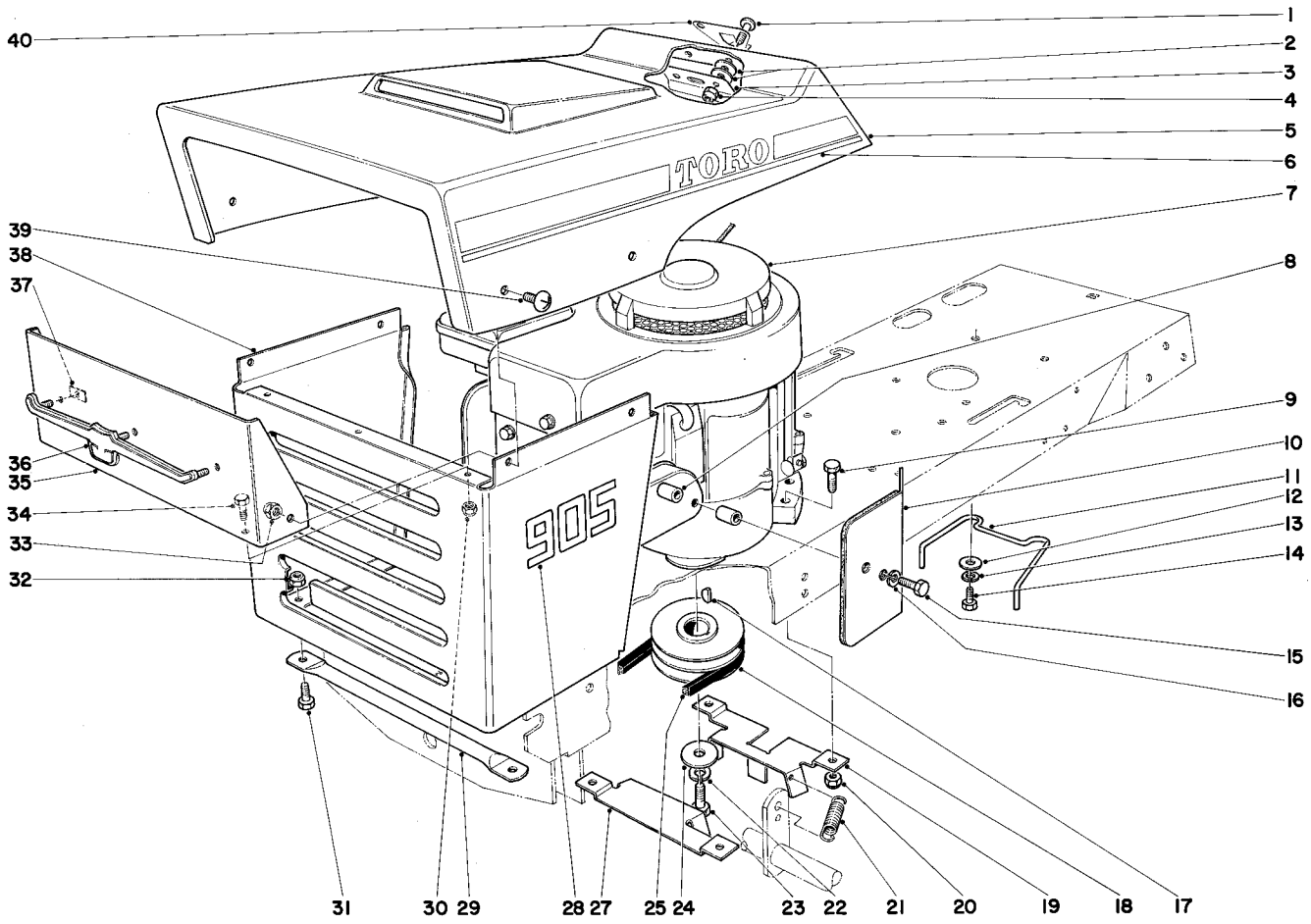

905 AND 910 HOOD AND ENGINE ASSEMBLY

Ref. No.	Part No.	Description	No. Used
1	3258-160S	Cross Recess Truss Head Screw	2
2	3256-16	Washer	4
3	7-3326	Latch Hood	1
4	32152-4S	Nut	2
5	7-3705	Hood	1
6	7-4300	Decal Hood 905	2
*	7-3357	Decal Hood R. H. 910	1
*	7-3358	Decal Hood L. H. 910	1
7	221-296	Engine	1
8	7-0746	Spacer	2
9	322-7	Capscrew	4
10	7-4216	Baffle Assembly	1
11	7-4310	Belt Retainer	1
12	3256-23	Washer	2
13	3253-24	Lockwasher	2
14	322-5	Capscrew	2
15	321-23	Capscrew	2
16	3253-3	Lockwasher	2
17	3257-3	Key Woodruff	1
18	7-3748	Pulley Engine	1
19	7-3743	Belt Guide	1
20	32152-1S	Nut	4

Ref. No.	Part No.	Description	No. Used
21	7-3968	Spring Tension	2
22	3253-21	Lockwasher	1
23	3211-5	Capscrew	1
24	3256-36	Flat Washer	1
25	7-3887	Belt Engine to Front Pulley	1
27	7-3766	Belt Guide	1
28	7-3928	Decal 905	2
*	7-3930	Decal 910	2
29	7-3682	Rod Grille Mount	1
30	32152-4S	Nut	3
31	321-2	Capscrew	2
32	32152-4S	Nut	2
33	32152-1S	Nut	4
34	321-2	Capscrew	3
35	7-3451	Panel Grille	1
36	7-3441	Bullshead Grille	1
37	3290-275S	Tinnerman Nut	3
38	7-3696	Grille Assembly	1
39	3258-158S	Cross Recess Truss Head Screw	4
40	7-4387	Hood Clip	1
	*Not Illustrated		

Copyright 1968 & 1969 By
Toro Manufacturing Corporation
Minneapolis, Minnesota 55420 U.S.A.

Price 25 cents

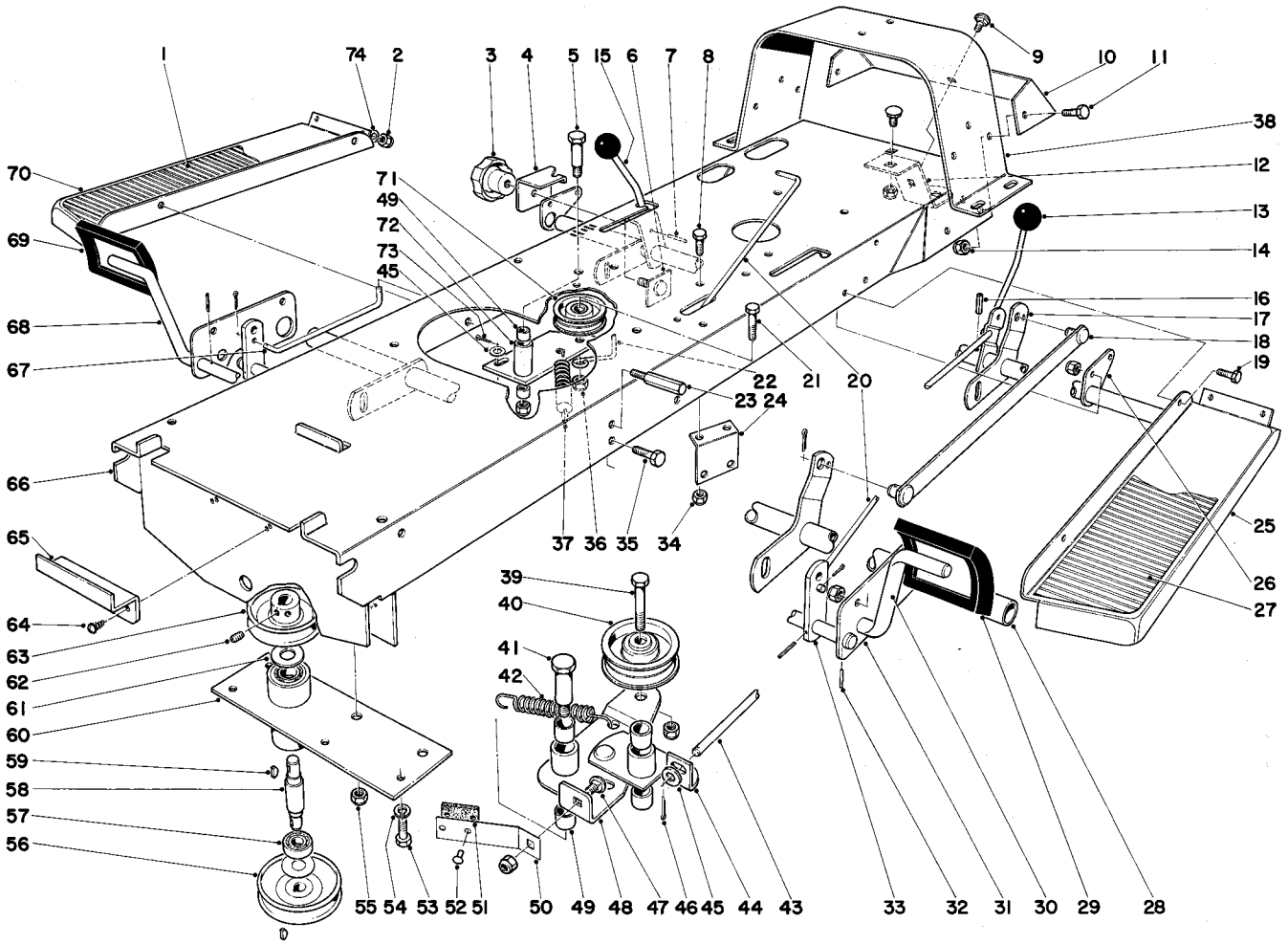

905 AND 910 FRAME ASSEMBLY

Ref. No.	Part No.	Description	No. Used
1	7-3894	Foot Pad R. H. 910	1
2	3217-26	Nut	4
3	7-3902	Knob	1
4	7-3772	Slide Height Adjustment	1
5	7-0731	Shoulder Bolt	1
6	7-3667	Knob Plate Assembly	1
7	32121-51	Roll Pin	1
8	322-2	Capscrew	2
9	3231-21	Carriage Bolt	2
10	7-3790	Frame Member Rear	1
11	323-4	Capscrew	2
12	7-3775	Bracket Hitch	1
13	233-22S	Knob, Control	2
14	32152-2S	Nut	2
15	7-3763	Rod Control Height Adjustment	1
16	32121-29	Roll Pin	1
17	7-3758	Rear Height of Adjustment Tube Assembly	1
18	7-3761	Height Adjustment Link	1
19	322-3	Capscrew	2
20	7-3736	Brake Rod	1
21	323-8	Capscrew	1
22	7-0751	Retainer Belt	1
23	7-3668	Pedal, Stop	2
24	7-3967	Belt Guide	1

Ref. No.	Part No.	Description	No. Used
25	7-3681	Foot Rest L. H.	1
26	7-3671	Bracket Tube	2
27	7-3895	Foot Pad L. H. 910	1
28	7-3737	Front Height of Adjustment	1
29	7-3901	Foot Pad Clutch	1
30	7-3688	Clutch Pedal Assembly	1
31	7-3670	Plate Tube	2
32	32121-45	Roll Pin	6
33	7-3683	Arm Lever	2
34	32152-1S	Nut	2
35	322-3	Capscrew	4
36	32152-2S	Nut	1
37	7-3970	Spring Tension	1
38	7-3735	Rear Support	1
39	323-8	Capscrew	1
40	7-0136	Idler Pulley	1
41	7-0731	Shoulder Bolt	2
42	7-3970	Spring Tension	1
43	7-3885	Clutch Rod Blade	1
44	7-3800	Pivot Bracket	1
45	3256-2	Flat Washer	2
46	3272-5	Cotter Pin	2
47	3231-21	Carriage Bolt	1
48	7-3751	Idler Plate	1
49	256-172S	Bushing	6

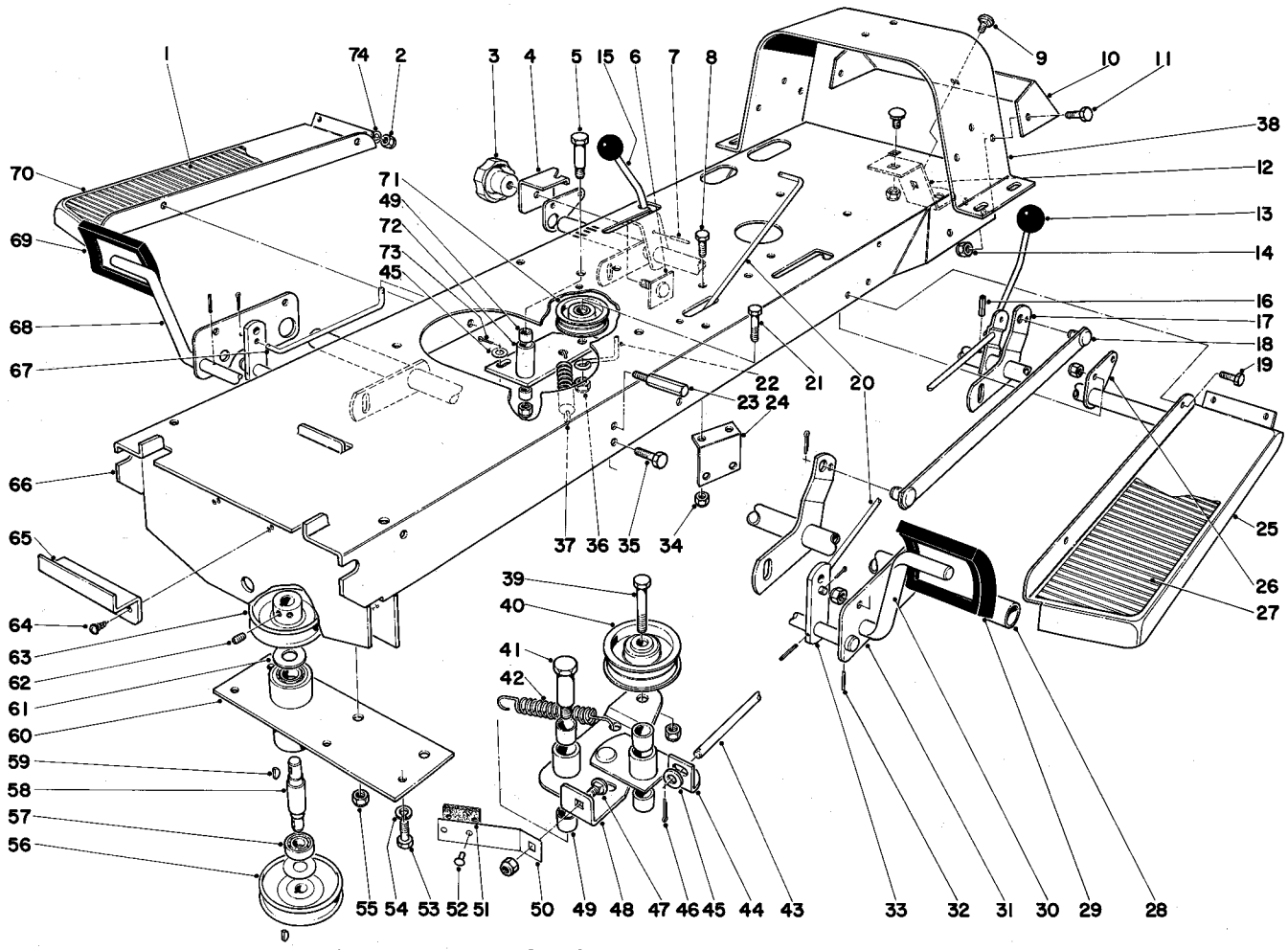

905 AND 910 FRAME ASSEMBLY

Ref. No.	Part No.	Description	No. Used
50	7-3801	Clutch Brake	1
51	7-0643	Brake Lining Blade	1
52	3290-287S	Pop Rivet	2
53	322-2	Capscrew	4
54	3253-4	Lockwasher	4
55	32152-2S	Nut	2
56	7-3793	Pulley	1
57	251-5	Bearing	2
58	7-3728	Shaft Pulley	1
59	3257-5	Woodruff Key	2
60	7-3730	Pulley Tube Assembly	1
61	7-0777	Bearing Washer	2
62	3246-2	Set Screw	2

Ref. No.	Part No.	Description	No. Used
63	7-3796	Pulley	1
64	32140-58	Self Tapping Screw	2
65	7-3886	Spring Clip	1
66	7-3750	Frame	1
67	7-3741	Clutch Rod	1
68	7-3690	Brake Pedal Assembly	1
69	7-3900	Foot Pad Brake	1
70	7-3680	Foot Rest R. H.	1
71	7-0136	Pulley Idler	1
72	7-3740	Idler Arm	1
73	3272-6	Cotter Pin	5
74	3256-23	Lockwasher	4

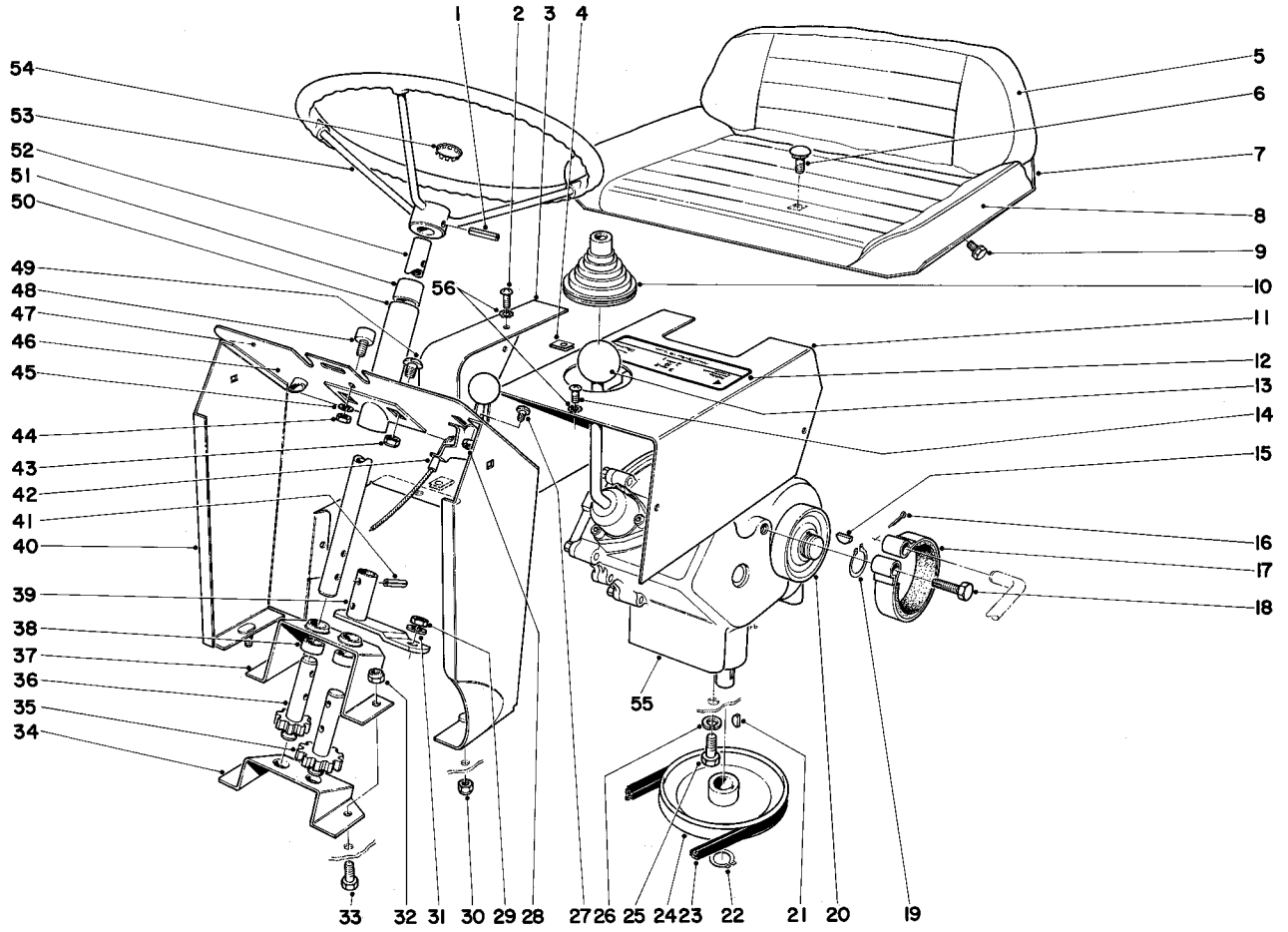

905 AND 910 STEERING AND TRANSMISSION ASSEMBLY

Ref. No.	Part No.	Description	No. Used
1	32121-15	Roll Pin	1
2	3290-111	Pan Head Screw	2
3	7-3873	Chain Guard	1
4	3290-191	Clip Tinnerman	5
5	7-4298	Seat Cover 905	1
*	7-3351	Cushion Back 910	1
6	3233-1	Carriage Bolt 905	1
7	7-4297	Frame Seat 905	1
*	7-3871	Frame Seat 910	1
8	7-3872	Cushion Seat 910	1
9	32140-16	Sems Screw 910	5
10	7-3893	Boot Shift Lever	1
11	7-3784	Transmission Cover	1
12	7-3907	Decal Shift Pattern	1
13	233-21S	Knob Transmission	1
14	3290-111	Pan Head Screw	3
15	3257-5	Key Woodruff	1
16	3272-10	Cotter Pin	1
17	7-3876	Brake Band	1
18	32104-28	Bolt Self Tapping	1
19	32120-72	Retaining Ring	1
20	7-3785	Brake Drum	1
21	3257-32	Key Woodruff	1
22	32120-64	Ring Retaining	1
23	7-3890	Belt Transmission to Engine	1
24	7-4085	Pulley	1
25	322-2	Capscrew	2
26	3253-24	Lockwasher	4
27	32122-43S	Machine Screw	2
28	32149-6	Nut	2
29	3219-3	Nut	1

Ref. No.	Part No.	Description	No. Used
30	32152-4S	Nut	2
31	3253-21	Lockwasher	1
32	32152-1S	Nut	2
33	322-3	Capscrew	2
34	7-3710	Bracket Steering	1
35	7-3733	Steering Gear Assembly	1
36	7-3734	Pinion Gear Assembly	1
37	7-3711	Support Steering	1
38	7-3747	Spacer	2
39	7-3883	Steering Arm Assembly	1
40	7-3804	Rear Hood Support	1
41	32121-4	Roll Pin	4
42	7-3746	Throttle Control	1
43	32152-1S	Nut	2
44	3217-5	Nut	1
45	3253-3	Lockwasher	1
46	7-3804	Rear Hood Support Assy.	1
47	7-3926	Decal Control Panel 905	
*	7-4386	Decal Control Panel 910	1
48	7-4388	Stud	1
49	3258-158S	Truss Hd. Screw Recess Hd.	2
50	7-3725	Steering Tube Assy.	1
51	256-167	Bushing	1
52	7-3723	Shaft Steering	1
53	7-3722	Steering Wheel	1
54	7-3892	Plug	1
55	7-3708	Transmission	1
56	3255-17	Lockwasher	5
*	3217-26	Nut (910 Decal	4
*	3255-17	Lockwasher Control	4
*	3290-111	Pan Head Screw Panel)	4

*Not Illustrated

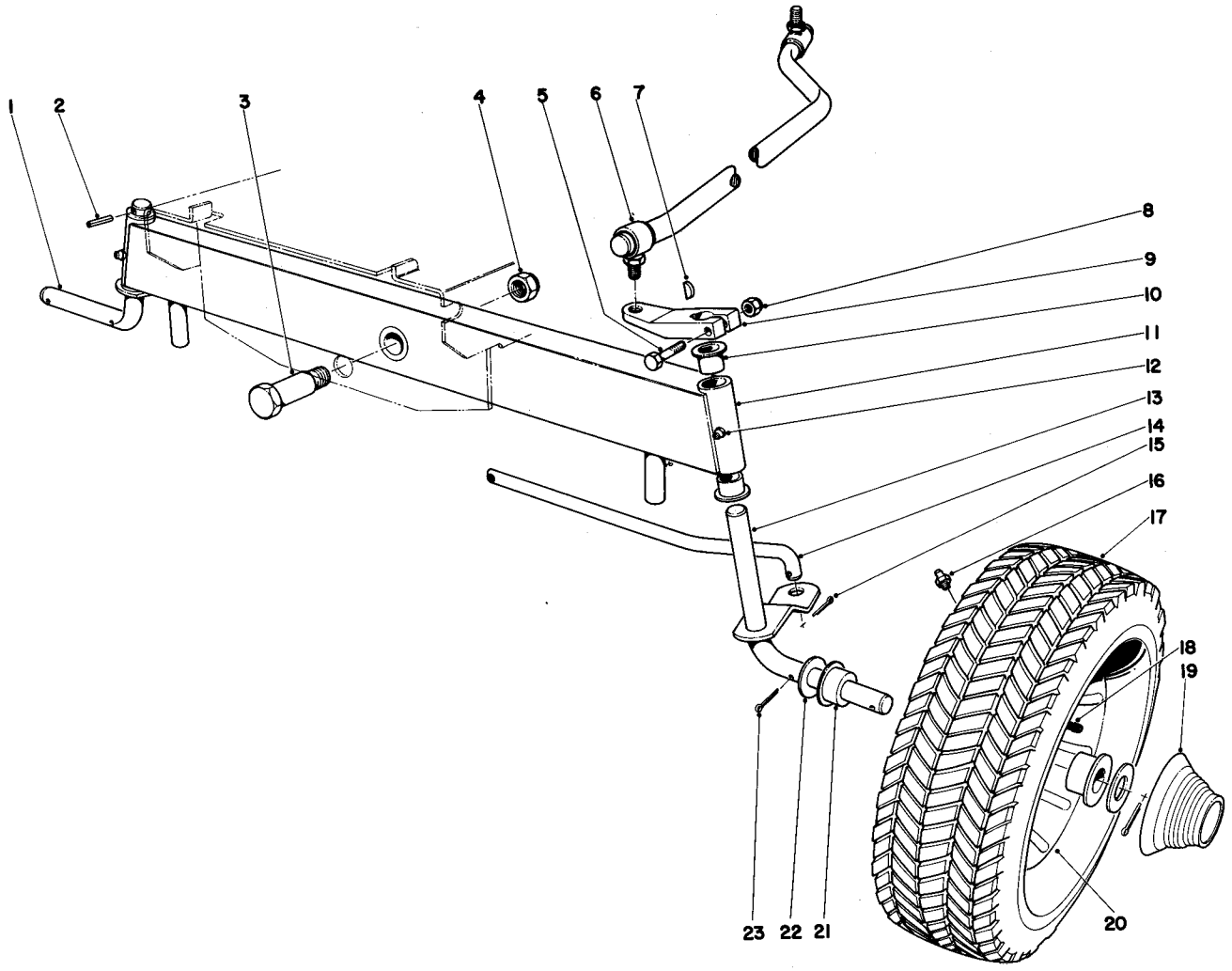

905 AND 910 FRONT AXLE ASSEMBLY

Ref. No.	Part No.	Description	No. Used
1	7-3716	Spindle R. H. 905	1
*	7-3718	Spindle R. H. 910	1
2	32121-50	Roll Pin	1
3	7-3884	Shoulder Bolt	1
4	32152-3S	Nut	1
5	321-9	Capscrew	1
6	7-3880	Steering Rod	1
7	3257-24	Woodruff Key	1
8	32152-4S	Nut	1
9	7-3706	Steering Arm	1
10	256-90	Bushing	4
11	7-3698	Front Axle	1
12	302-49	Grease Fitting	2
13	7-3717	Spindle L.H. 905	1

Ref. No.	Part No.	Description	No. Used
*	7-3715	Spindle L. H. 910	1
14	7-3776	Tie Rod	1
15	3272-6	Cotter Pin	2
16	302-5	Grease Fitting	2
17	7-3220	Front Wheel Assembly 905	2
*	7-3703	Front Wheel Assembly 910	2
*	231-55S	Tire 910	2
18	232-27S	Valve Stem & Cap 910	2
19	7-3932	Hub Cap Front 910	2
20	217-80S	Rim 910	2
21	256-170S	Bushing	4
22	3256-7	Washer	4
23	3272-12	Cotter Pin	4
		*Not Illustrated	

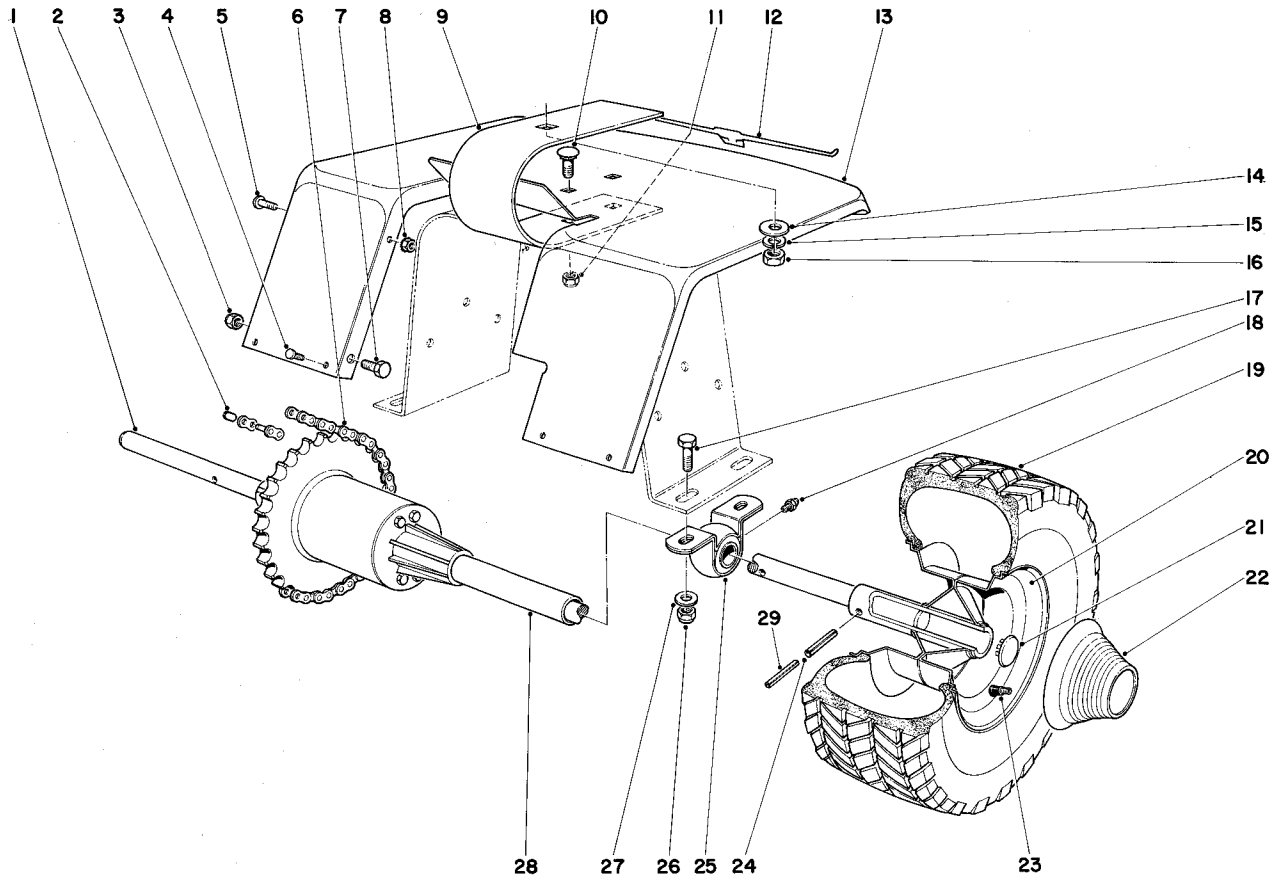

905 AND 910 REAR AXLE ASSEMBLY

Ref. No.	Part No.	Description	No. Used
1	7-3692	Differential	1
2	2710-6	Connecting Link	1
3	32152-1S	Nut	2
4	3290-111	Pan Head Screw	4
5	3290-111	Pan Head Screw	2
6	7-3870	Roller Chain	1
7	322-3	Capscrew	2
8	32149-7	Nut	2
9	7-3674	Seat Spring	1
10	3231-2	Carriage Bolt	2
11	32152-2S	Nut	2
12	7-3908	Decal	1
13	7-3745	Fender	1
14	3256-26	Washer	1
15	3253-7	Lockwasher	1
16	3218-5	Jam Nut	1

Ref. No.	Part No.	Description	No. Used
*	32152-3S	Nut 910	1
17	323-4	Capscrew	4
18	302-5	Grease Fitting	2
19	7-4296	Rear Wheel Assembly 905	2
*	7-3774	Rear Wheel Assembly 910	2
*	231-49S	Tire 910	2
20	217-70S	Rim 910	2
21	2410-11	Button 905	2
22	7-3933	Hub Cap Rear 910	2
23	232-27S	Valve Stem & Cap 910	2
24	32121-9	Roll Pin	2
25	7-3770	Pillow Block	2
26	32152-2S	Nut	4
27	3256-4	Washer	4
28	7-3877	Tube Rear Axle	1
29	32121-51	Roll Pin	2

*Not Illustrated.

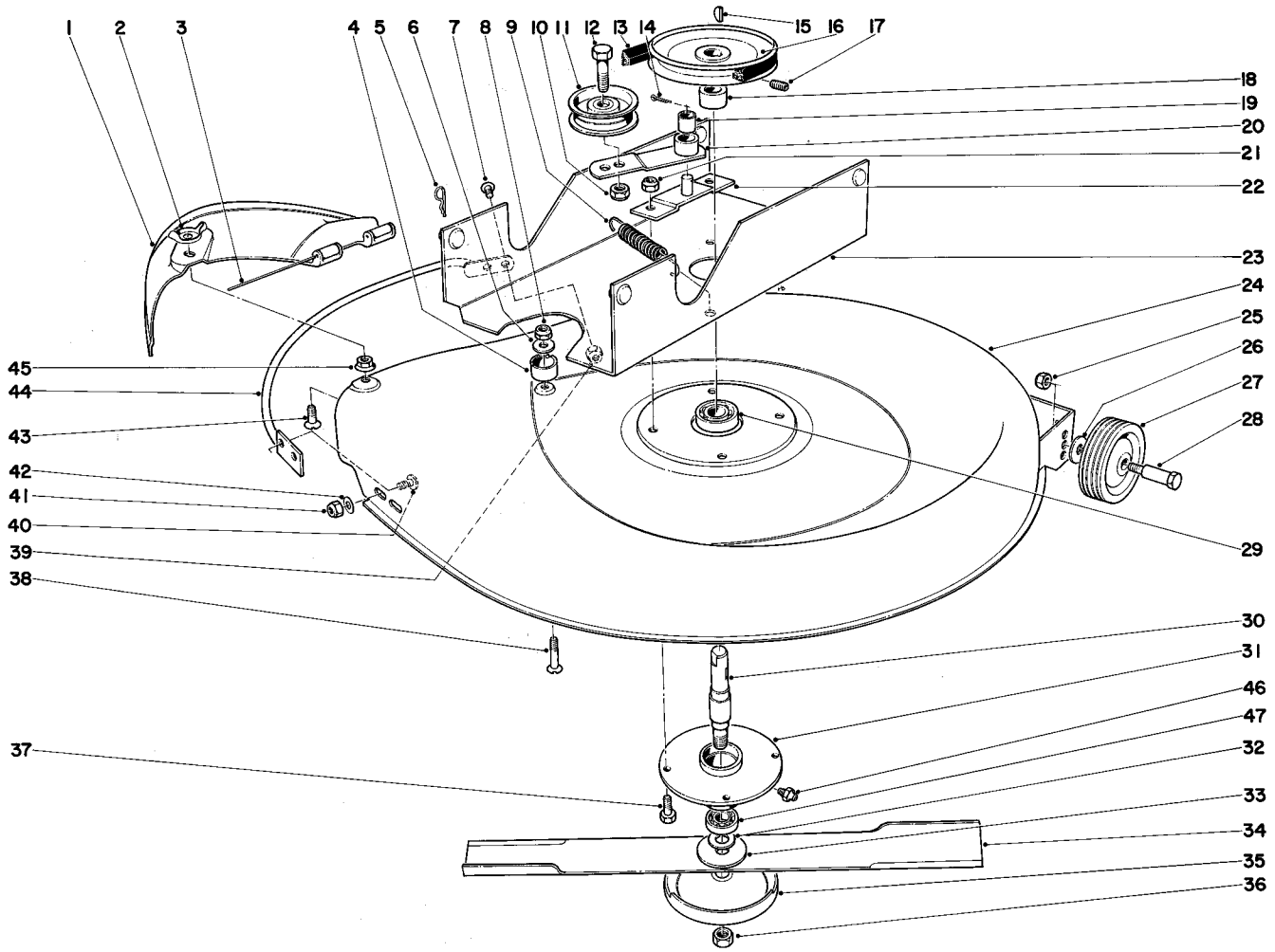

25" MOWER ASSEMBLY

Ref. No.	Part No.	Description	No. Used
1	3-0674	Deflector	1
2	3-2625	Wing Nut	1
3	3-1176	Hinge Pin	1
4	3-5528	Spacer Deflector	2
5	3290-250	Hair Pin	4
6	3256-2	Washer	2
7	32122-33	Truss Head Screw	2
8	32152-4S	Nut	2
9	7-3984	Spring	1
10	32152-2S	Nut	1
11	7-0448	Pulley Idler	1
12	323-8	Capscrew	1
13	7-3888	Belt Front Pulley to Mower	1
14	3272-6	Cotter Pin	1
15	3257-5	Woodruff Key	1
16	7-3795	Pulley	1
17	3246-3	Set Screw	2
18	7-3747	Spacer Blade Spindle	1
19	256-172S	Bushing	1
20	7-3768	Idler Plate	1
21	32152-1S	Nut	4
22	7-3798	Pivot Bracket	1
23	7-3697	Channel	1
24	7-4251	Housing Assembly	1

Ref. No.	Part No.	Description	No. Used
25	32152-2S	Nut	2
26	3256-6	Washer	2
27	7-0261	Wheel	2
28	7-0262	Shoulder Bolt	2
29	251-5	Bearing	1
30	7-3744	Blade Spindle	1
31	7-0287	Mower Spindle Housing	1
32	7-3590	Washer	1
33	7-0253	Washer	1
34	7-3467	Blade	1
35	7-3522	Anti Scalp Cup	1
36	32152-6S	Nut	1
37	322-3	Capscrew	4
38	32108-7	Screw Flat Head	2
39	32152-1S	Nut	2
40	3290-145	Screw Pan Head	2
41	32152-4S	Nut	2
42	3256-22	Washer	2
43	32108-21	Screw Flat Head	1
44	3-7718	Blade Guard Assembly	1
45	3290-147	Nut	1
46	302-5	Grease Fitting	1
47	251-123	Bearing	1

ENGINE ASSEMBLY

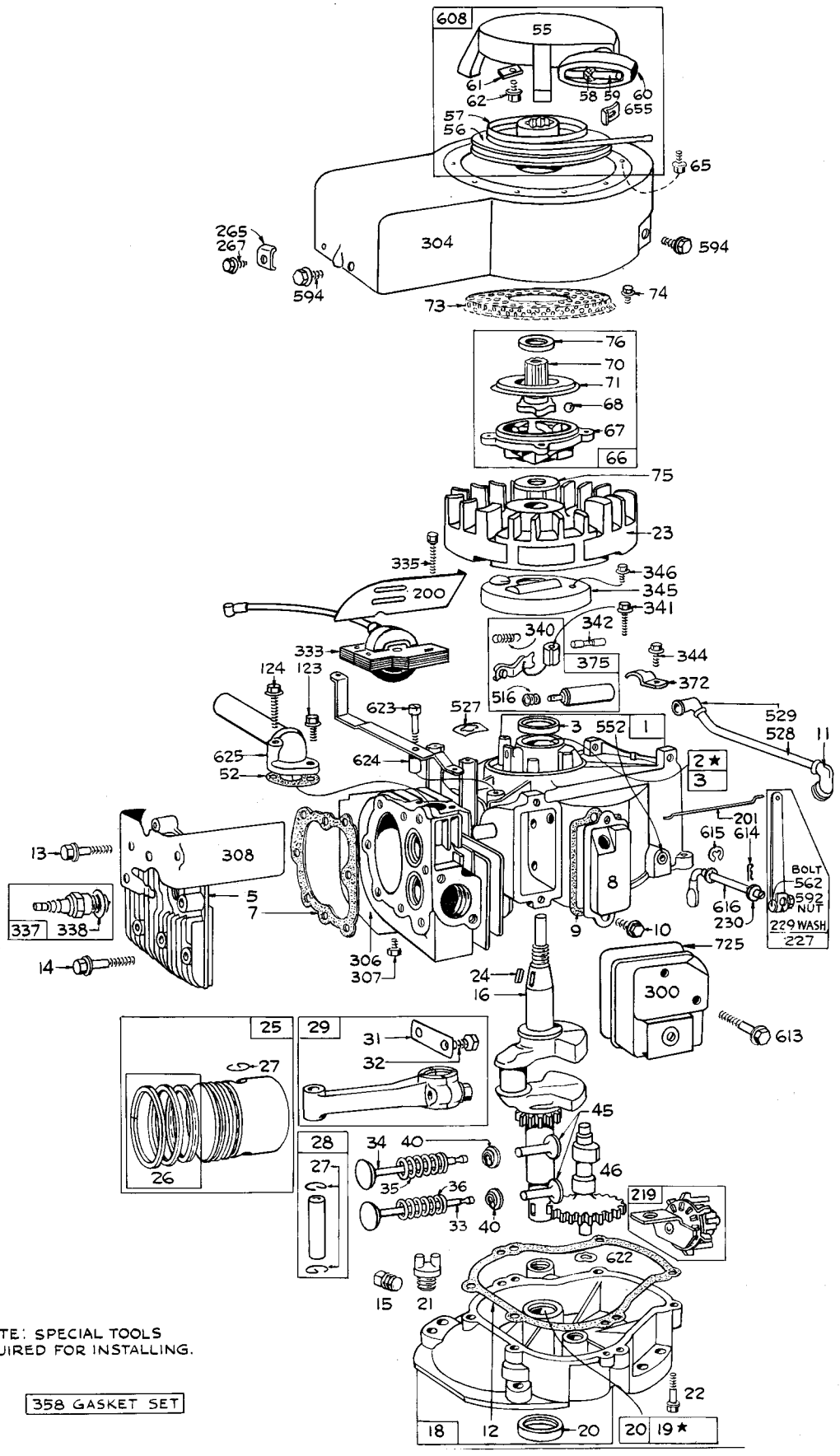

ENGINE MODEL SERIES 130902

Ref. No.	Part No.	Description	No. Used
1	299446	Cylinder Assembly	1
2	297565	Bushing–Cylinder	
	Note:	Requires special tools for installation.	1
3	89660	Seal–Oil	1
5	211542	Head–Cylinder	1
7	270383	Gasket–Cylinder Head	1
8	297261	Breather–Valve Chamber	1
9	*27549	Gasket–Valve Cover	1
10	93394	Screw–Breather Mtg. Sem	1
11	67738	Grommet–Breather	1
12	270069	Gasket–Crankcase .015" thick (Standard)	1
	270122	Gasket–Crankcase– .005" thick	1
	270123	Gasket–Crankcase– .009" thick	1
13	93368	Screw–Cylinder Head	1
14	93369	Screw–Cylinder Head	1
15	91084	Plug–Oil Drain	1
16	260936	Crankshaft	1
18	297587	Sump Oil	
19	297604	Bushing–Oil Sump	1
	Note:	Requires special tools for installation.	
20	294167	Seal–Oil	1
21	66768	Plug–Oil Filler	1
22	93032	Screw–Sump Mtg. Sem	1
23	297229	Flywheel–Magneto	1
24	61760	Key–Flywheel	1
25	298904	Piston Assy.–Standard	1
	298905	Piston Assy.–.010"O.S.	1
	298906	Piston Assy.–.020"O.S.	1
	298907	Piston Assy.–.030"O.S.	1
MODEL 130900 SERIES PISTON RING SETS:			
	Note:	For Chrome Piston Ring Set–Standard size– order Part No. 299742.	
26	298982	Ring Set–Std. Piston Consists of:	
		211467 Ring, Piston, Comp., Top, Standard	1
		211468 Ring, Piston, Comp., Center, Standard	1
		211469 Ring, Piston, Oil, Standard	1
	298983	Ring Set–.010" O.S. Piston Consists of:	
		211504 Ring, Piston, Comp., Top, .010" O.S.	1
		211503 Ring, Piston Comp., Center, .010" O.S.	1
		211505 Ring, Piston, Oil, .010" O.S.	1
	298984	Ring Set–.020" O.S. Piston Consists of:	
		211507 Ring, Piston, Comp., Top, .020" O.S.	1
		211506 Ring, Piston, Comp., Center, .020" O.S.	1
		211508 Ring, Piston, Oil, .020" O.S.	1
	298985	Ring Set–.030" O.S. Piston Consists of:	
		211511 Ring, Piston, Comp., Top., .030" O.S.	1
		211510 Ring, Piston, Comp., Center, .030" O.S.	1
		211512 Ring, Piston, Oil, .030" O.S.	1
27	26026	Lock–Piston Pin	1
28	298909	Pin Assy.–Piston–Std.	1
	298908	Pin Assy.–Piston–.005" O.S.	1
29	299429	Rod Assy.–Connecting	1
31	221876	Lock–Connecting Rod	1
32	92296	Screw–Connecting Rod	1
33	211119	Valve–Exhaust	1
34	260961	Valve–Intake	1
35	260552	Spring–Intake Valve	1
36	26478	Spring–Exhaust Valve	1
40	93312	Retainer–Valve Spring	1
45	260642	Tappet–Valve	1
46	211590	Gear–Cam	1
52	270070	Gasket – Intake Elbow Mounting	1
55	299431	Housing–Rewing Starter	1
56	295871	Pulley–Rewind Starter	1
57	294303	Spring–Rewind Starter	1
58	66564	Rope–Rewind Starter	1
59	230228	Pin–Starter Rope	1
60	66728	Grip–Starter Rope	1
61	68848	Bumper–Starter Pulley	1
62	93254	Screw–Pulley Bumper Mounting	1
65	93163	Screw–Rewind Starter Housing Mounting Sem	1
66	298310	Clutch Assy.–Rewind Starter	1
67	211383	Housing–Starter Clutch	1
68	63770	Ball–Clutch	1
70	298436	Ratchet–Starter Clutch	1
71	221653	Washer–Clutch Retainer	1
73	221923	Screen–Rewind Starter	1
74	93042	Screw–Rotating Screen Mounting Sem	1
75	220865	Washer–Spring	1
76	68238	Washer–Ratchet Sealing	1
123	93512	Screw–Intake Elbow Mtg.	1
124	93367	Screw–Intake Elbow Mtg.	1
200	221480	Guide–Air	1
201	260649	Link–Governor	1
219	297249	Oil Slinger Gear, Governor and Bracket	1
227	297583	Lever Assy.–Governor	1
229	220680	Washer–Governor Lever	1
230	221559	Washer–Governor Lever	1
265	22372	Clamp–Casing	1
267	93469	Screw–Clamp Mounting	1
300	297274	Muffler–Exhaust	1
304	299332	Housing–Blower	1
306	221484	Shield–Cylinder	1
307	93042	Screw–Cylinder Shield Mounting Sem	1
308	221452	Cover–Cylinder Head	1
333	298316	Armature–Magneto	1
335	93414	Screw–Armature Mtg. Sem	1
337	298809	Plug–Spark (with gasket)	1
338	29806	Gasket–Spark Plug	1
340	26018	Spring–Breaker Arm	1
341	93381	Screw–Contact Finger Post Mounting Sem	1
342	65704	Plunger–Breaker Point	1

ENGINE MODEL SERIES 130902

Ref. No.	Part No.	Description	No. Used
344	93042	Screw–Condenser Clamp Mounting Sem	1
345	220366	Cover–Breaker Point and Condenser	1
346	93014	Screw–Dust Cover Mounting Sem	1
358	297616	Gasket Set	1
372	220477	Clamp–Condenser	1
375	294628	Breaker Points and Condenser Set	
	Note:	299061 Ignition Kit Includes: 294628 Point Set 65704 Plunger 61760 Key–Flywheel	1
516	260374	Spring–Connector	1
527	93376	Clip–Breather Pipe	1
528	230717	Tube–Breather	1
529	67608	Grommet–Breather Tube	1
552	230735	Bushing–Governor Shaft	1

Ref. No.	Part No.	Description	No. Used
562	92613	Bolt–Governor Lever	1
592	90356	Nut–Hex.	1
594	903559	Screw–Blower Housing Mounting Sem	1
608	299334	Starter Assy.–Rewind	1
613	93377	Screw–Muffler Mounting	1
614	93306	Cotter–Hair Pin	1
615	93307	Retainer–E-Ring	1
616	230714	Crank–Governor	1
622	260676	Washer–Spring (Used between cam gear boss and oil slinger bracket)	1
623	93566	Screw–Shoulder	1
624	297252	Lever–Linkage	1
625	297254	Elbow and Tube–Intake	1
655	221014	Anchor–Spring	1
725	221885	Shield–Heat	1

*Included in Gasket set–Part No. 297616.

PRODUCT CHANGES

In an effort to make improvements available to Toro owners as quickly as possible, minor changes are incorporated into Toro's products from time to time that do not become immediately shown in the Parts Catalog. If such a change apparently has been made in your unit, which is not reflected in your manual, see your Toro distributor or his authorized Toro service dealer for information and part numbers.

Warranty

The Manufacturer warrants each new piece of equipment sold to be free of defects in material and workmanship. For one year from the purchase date of consumer line equipment or 45 days if sold for commercial use, Toro Manufacturing Corporation will repair or replace for the original purchaser, free of charge, through any Authorized Service Dealer, any part or parts found at our factory in Minneapolis, Minnesota, to be defective under normal use and service. All institutional equipment is warranted for ninety (90) days from the purchase date.

This Warranty does not obligate the Manufacturer to bear the cost of transportation charges in connection with the replacement or repair of defective parts - - nor shall it apply to a machine upon which repairs or alterations have been made, unless authorized by the manufacturer.

This Warranty does not include nor cover standard accessories produced by other manufacturers. Such accessories have separate warranties by their respective manufacturers . . . and repair or exchange will be made on the basis of such warranties, and the policies authorized by them shall be adhered to.

This Warranty is in lieu of all other warranties expressed or implied.

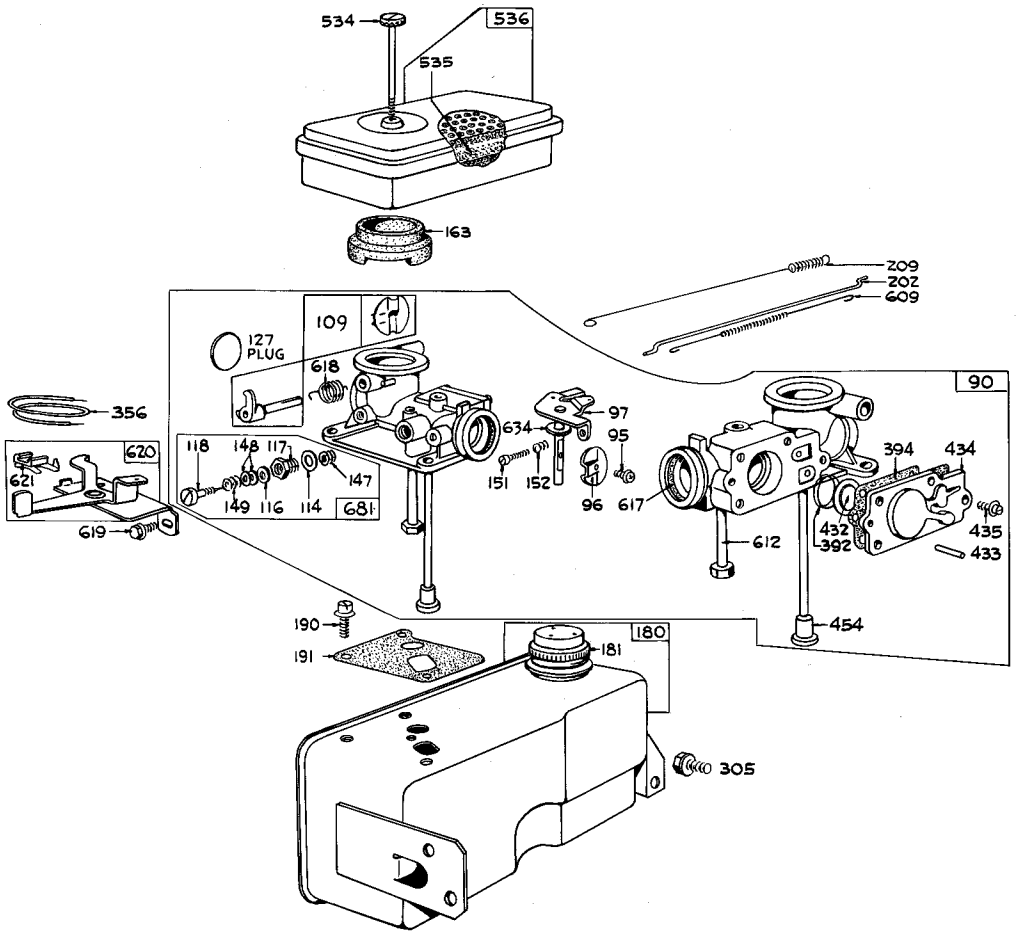

MODEL 299448 CARBURETOR ASSEMBLY

Ref. No.	Part No.	Description	No. Used
90	299448	Carburetor Assembly	1
95	93385	Screw–Throttle Valve to Shaft Sem	1
96	211237	Valve–Throttle	1
97	299692	Shaft and Lever–Throttle	1
109	390076	Shaft Assembly Choke	1
114	66594	Gasket – Needle Valve Nut	1
116	65978	Packing–Needle Valve	1
117	230590	Nut–Needle Valve	1
118	23433	Valve–Needle	1
127	22831	Plug–Welch	1
147	230591	Seat–Needle Valve	1
148	22235	Washer–Needle Valve (2)	1
149	26336	Spring–Needle Valve	1
151	92634	Screw–Machine, Rd.	1
152	260575	Spring–Throttle Adjustment	1
163	27660	Gasket–Air Cleaner Mtg.	1
180	297257	Tank Assembly–Fuel	1
181	298425	Cap–Fuel Tank	1
190	93341	Screw–Fuel Tank Mtg.	1
191	270073	Gasket–Fuel Tank Mtg.	1
202	260654	Link–Throttle	1
209	260711	Spring–Governor	1

Ref. No.	Part No.	Description	No. Used
305	93158	Screw–Tank Bracket Mtg. Sem	1
356	297473	Wire–Ground	1
392	260455	Spring–Fuel Pump Diaphragm	1
394	270026	Diaphragm	1
432	221377	Cap–Spring	1
433	93265	Pin–Diaphragm Cover	1
434	210959	Cover–Diaphragm	1
435	93141	Screw–Diaphragm Cover	1
454	296178	Housing–Fuel Pipe Screen	1
534	93374	Screw–Air Cleaner	1
535	270447	Element–Air Cleaner	1
536	299447	Cleaner Assembly–Air	1
609	260029	Spring–Throttle Link	1
612	296811	Pipe–Fuel (Plastic)	1
617	270074	Seal–Intake Elbow Tube	1
618	260648	Spring–Choke Return	1
619	93380	Screw–Control Plate Mtg.	1
620	297548	Plate Assy.–Carburetor Control	1
621	297472	Switch–Stop	1
634	270167	Washer–Throttle Shaft	1
681	299060	Needle Valve Kit	1

*Included in Gasket Set Part No. 297616

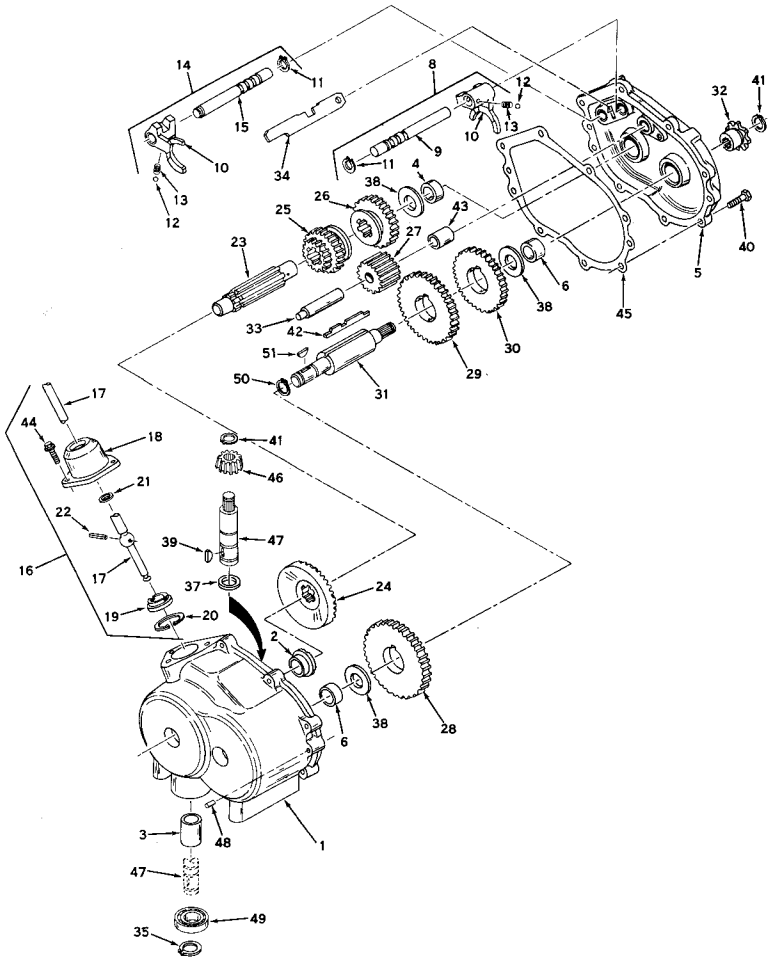

MODEL 352 TRANSMISSION

Ref. No.	Part No.	Description	No. Used
1	770048	Case Assy., Transmission (Incl. Nos. 2, 3 & 6)	1
2	780079	Bearing, Bronze	1
3	780087	Bearing, Bronze	1
4	780080	Bearing, Bronze	1
5	772060	Cover Assy., Transmission (Incl. Nos. 4 & 6)	1
6	780081	Bushing, Bronze	1
8	784079	Rod Assy., Shift (Incl. Nos 9 thru 13)	1
9	784083	Rod, Shift	1
10	784004	Fork, Shifter	1
11	792017	Ring, Retainer	1
12	792004	Ball, Steel	1
13	792003	Spring	1
14	784128	Rod Assy., Shift (Incl. Nos. 10 thru 13 & 15)	1
15	784129	Rod, Shift	1
16	784177	Lever & Housing Assy., Shift (Incl. Nos. 17 thru 22)	1
17	784178	Lever, Shift	1
18	784088	Housing, Shift Lever	1
19	784094	Keeper, Shift Lever	1
20	792016	Ring, Snap	1
21	792001	Ring, Quad	1
22	792002	Pin, Roll	1
23	776079	Shaft, Shifter	1

Ref. No.	Part No.	Description	No. Used
24	778070	Gear, Bevel (33 teeth)	1
25	778071	Gear, Shift (1st & 2nd)	1
26	778072	Gear, Shift (3rd & Rev.)	1
27	778073	Idler, Reverse	1
28	778074	Gear (39 teeth)	1
29	778062	Gear (34 teeth)	1
30	778075	Gear (30 teeth)	1
31	776083	Shaft, Output	1
32	786047	Sprocket (8 teeth)	1
33	776081	Shaft, Reverse Idler	1
34	784132	Stop, Shifter	1
35	792035	Ring, Retainer	1
37	780082	Bearing, Thrust	1
38	780001	Washer	1
39	792045	Key, Woodruff	1
40	792046	Screw, Hex hd. self tap	1
41	788040	Ring, Retainer	1
42	792034A	Key, Counter shaft	1
43	786036	Spacer, Reverse idler	1
44	792007	Screw, Socket hd. cap	1
45	788041	Gasket, Transmission	1
46	778077	Pinion, Input	1
47	776098	Shaft, Input	1
48	786026	Pin, Dowel	1
49	780092	Bearing, Ball	1
50	788038	Ring, Retaining	1
51	792047	Key, Woodruff	1

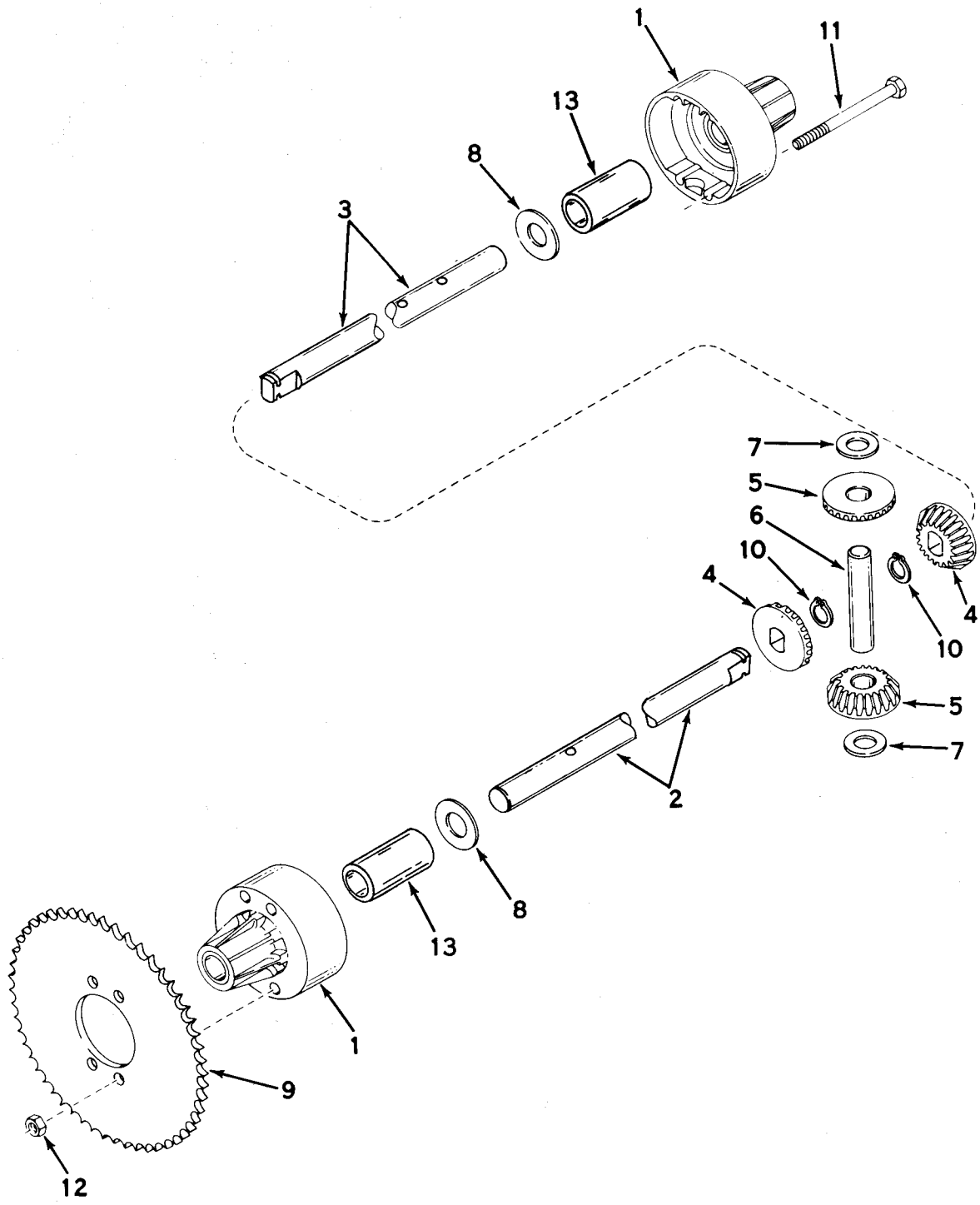

DIFFERENTIAL MODEL 120

Ref. No.	Part No.	Description	No. Used
1	774073	Housing, Differential carrier (Incl. No. 13)	1
2	774149	Axle (8 27/32" long)	1
3	774150	Axle (13 23/32" long)	1
4	778067	Gear, Bevel	1
5	778068	Gear, Pinion	1
6	786040	Pin, Drive	1

Ref. No.	Part No.	Description	No. Used
7	780073	Washer, Thrust	1
8	780001	Washer	1
9	786042	Sprocket (40 teeth)	1
10	788038	Ring, Snap	1
11	792041	Screw, Hex hd.	1
12	792042	Nut, Lock	1
13	780077	Bushing	1

OPERATING AND MAINTENANCE INSTRUCTIONS

SERVICE AIR CLEANER REGULARLY

Clean and re-oil air cleaner element every 25 hours under normal conditions. The capacity of the "Oil-Foam" air cleaner is adequate for a full season's use without cleaning in average homeowner lawn mower service. (Clean every few hours under extremely dusty conditions).

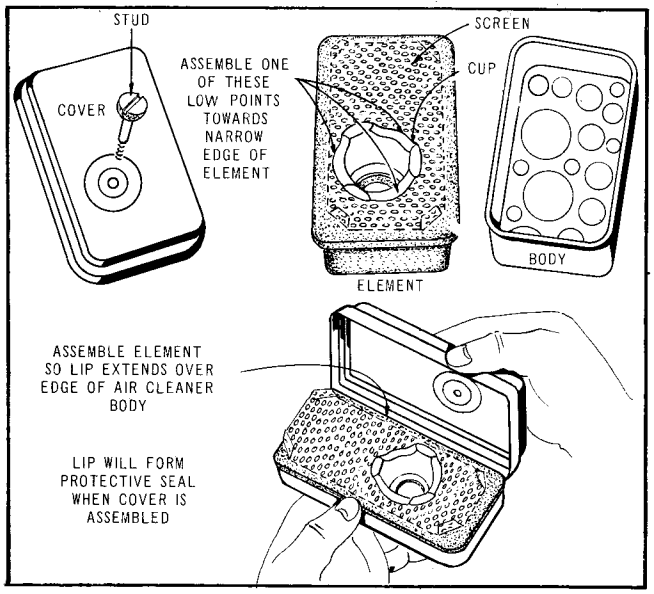

1. Remove Stud.
2. Remove air cleaner carefully to prevent dirt from entering carburetor.
3. Take air cleaner apart.
4. A – Wash foam element in kerosene or liquid detergent and water to remove dirt.

   B – Wrap foam in cloth and squeeze dry.

   C – Saturate foam in engine oil. Squeeze to remove excess oil.

   D – Assemble parts - fasten to carburetor with stud.

CARBURETOR CONTROL ADJUSTMENTS

REMOTE CONTROL

Proper choke and stop switch operation is dependent upon proper adjustment of remote controls on your lawn tractor.

To Check Operation:

Remove Air Cleaner. Move remote control lever to CHOKE position. The carburetor choke should be then closed. Move the remote control lever to STOP. Control lever on carburetor should then make good contact with stop switch to short out ignition.

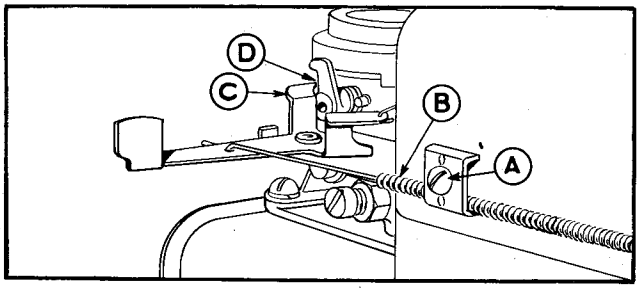

To Adjust:

Move remote control lever to FAST position.

Lever C on carburetor should be just touching choke arm at D. To adjust, loosen casing clamp screw A on blower housing. Move control casing B forward or backward until correct position is obtained. Tighten screw A.

Recheck operation of controls after adjustment. Replace air cleaner.

CARBURETOR ADJUSTMENTS

IMPORTANT: Air Cleaner should always be checked or cleaned first prior to carburetor adjustments. In many cases a dirty air cleaner results in unnecessary carburetor adjustments.

Carburetors are adjusted at the factory and normally do not need adjustment unless they have been disassembled.

Initial Adjustment after Re-assembly

Turn needle valve clockwise to close it. Then open 2 turns. This initial adjustment will permit the engine to be started and warmed up before making final adjustment.

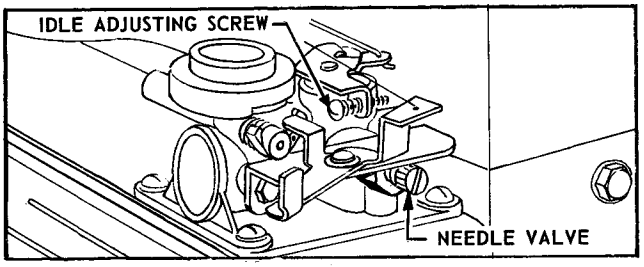

Final Adjustment:

With engine running at normal operating speed (approximately 3000 RPM without load) turn needle valve clockwise until engine starts to lose speed (lean mixture). Then slowly turn needle valve counterclockwise past the point of smoothest operation, until engine just begins to run unevenly. This mixture will give best performance under load.

Hold throttle in idling position. Turn idle speed adjusting screw until fast idle is obtained (1750 RPM).

Test the engine under full load. If engine tends to stall or die out, it usually indicates that the mixture is slightly lean and it may be necessary to open the needle valve slightly to provide a richer mixture. This richer mixture may cause a slight unevenness in idling.

STORAGE INSTRUCTIONS

Engines to be stored over 30 days should be completely drained of fuel to prevent gum deposits forming on essential carburetor parts, fuel filter, fuel lines and tank.

A. All fuel should be removed from fuel tank. Run the engine until it stops from lack of fuel. The small amount of fuel that remains in the sump of the tank should be then removed by absorbing it with a clean dry cloth.

B. Remove spark plug, pour 1 ounce of SAE-30 oil into cylinder and crank slowly to distribute oil. Replace spark plug.

C. Clean dirt and chaff from cylinder, cylinder head fins and blower housing.

TIRE PRESSURE

For shipping purposes, the tires have been over-inflated. The recommended tire pressure is 12-14 lbs.

SPECIFICATIONS

FUEL TANK CAPACITY: 2 quarts

TRANSMISSION: 3 speed forward and 1 reverse; die cast aluminum housing with enclosed sintered powder metal gears.

Reductions: 1st – 6.2:1
2nd – 4.1:1
3rd – 3.0:1
Rev. – 3.4:1

TRACTION DRIVE: "4L" section V-belt from 2.75 P.D. engine pulley to 5.25 P.D. Transmission input pulley (1.9:1 reduction) No. 41 chain on 8T transmission output shaft to 40T sprocket on differential (5:1 reduction). Total reduction engine to wheels:

1st – 62:1
2nd – 41:1
3rd – 30:1
Rev. – 34:1

TRANSMISSION LUBRICATION: Permanently lubricated with 12 oz. Valvoline X-all.

DIFFERENTIAL: Die cast aluminum housing with enclosed sintered powder metal bevel gears. 3/4 axle shafts. Permanently lubricated with 1 oz. Valvoline X-all.

SPEEDS: At 3400 engine RPM:
1st – 2.2 MPH
2nd – 3.5 MPH
3rd – 4.8 MPH
Rev. – 4.0 MPH

WHEELS: Front and Rear – stamped steel discs with drop center rims.

TIRES:

905	Front:	3.50 x 10.25 semi-pneumatic lawn and garden tread.
	Rear:	13 x 4.00 semi-pneumatic lawn and garden tread.
910	Front:	11 x 4.00-5 tubeless pneumatic terra tire.
	Rear:	13 x 5.00-6 tubeless pneumatic terra tire.

CONSTRUCTION: 11 gage HRPO steel formed channel with 3/16 steel seat and differential support at rear. 5/8" diameter CRS spindles. 11 gage front axle. 18 gage one piece rear fender.

STEERING: 13" diameter 3 spoke 5" deep dish steering wheel – 2.1 ratio.

CUTTER DRIVE: Belt drive from jackshaft ahead of engine.

CUTTER HOUSING: Semi-floating 14 gage stamped steel housing attached to frame by 1/2 steel pins.

CUTTER WIDTH: 25"

BLADE: One piece 8 gage fully hardened alloy steel.

BLADE TIP SPEED: 17,700 FPM @ 3400 engine RPM.

CUTTER SPINDLE: Steel mounted in 2 single rows, double sealed ball bearings.

HEIGHT OF CUT: 1 1/4" to 3" control lever with infinite height variations.

CONTROLS:

ENGINE: Control wire and casing with stop, slow, fast and choke positions mounted on dash.

TRANSMISSION: Single lever with 4 position H pattern.

TRACTION CLUTCH: Foot operated pedal. Depressing pedal disengages idler pulley from belt.

CUTTER: Single lever. Inlock-out position, blade belt idler is disengaged and blade brake applied. In engaged position, brake is released and cutter belt engaged.

DIMENSIONS:

Wheel base:	39"
Wheel Tread:	23 1/2" Front
905	22" Rear
910	21 1/2" Rear
	Both 27" outside to outside
Turning Radius:	33"
Length:	52"
Width:	29"
Height:	33"

WEIGHT: 240 pounds with 25" cutter.

BRAKE: Foot operated pedal -- right side. Depressing pedal engages band on 2 1/2" dia. drum.

SAFETY FEATURES: Meets A.S.A. Specifications.
Separate blade & clutch control.
Automatic blade brake.
Enclosed and guarded drive.

OPTIONAL EQUIPMENT:
Snow Blade attachment.
25" Rotary Bagger Kit.
Roller
Aerator
Spreader-Seeder
Lawn Sweeper
Tire Chains
Dump Cart

IMPORTANT ORDERING INSTRUCTIONS

Repair parts are available from your TORO dealer. To insure getting correct parts without delay, please furnish the following information:

1. Serial number of your product as shown on the name plate.
2. Part number, description and quantity of each part required.
3. Name and address where parts are to be shipped.
4. Do NOT order by reference number, use part number only.

MAINTENANCE RECORD
