FORM NO. 3323–816

TORO®

Rear Roller Brush Kit

For Reelmaster® 5000D

Model No. 03526

Installation Instructions

1. Park the tractor on a level surface and engage the parking brake.
2. Ensure that the cutting units are disengaged. Turn the engine off and remove the key. Remove all cutting units.

⚠ CAUTION ⚠

POTENTIAL HAZARD
- **If you leave the key in the ignition switch, someone could start the engine.**

WHAT CAN HAPPEN
- **Accidental starting of the engine could seriously injure you or other bystanders.**

HOW TO AVOID THE HAZARD
- **Remove the key from the ignition switch before you do any maintenance.**

3. Remove the (2) locknuts securing the counter weight to the left end of the cutting unit. Remove the counter weight (Fig. 1). For Reelmaster 5100 and 5300, remove the reel shaft magnet and capscrew. Also remove the speed sensor from the counter weight and set it aside (Fig. 1).

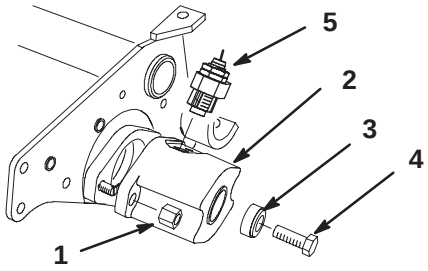

Figure 1

1. Locknut
2. Counter weight
3. Reel shaft magnet
4. Capscrew
5. Speed sensor

4. Apply removable No. 242 Loctite (blue) to the threads on the tang drive. Slide the new magnet onto the tang drive and screw the tang drive into the reel shaft (Fig. 2). The tang drive must be oriented with the shallow end facing outward as shown. Torque to 27 to 33 ft-lbs.

Note: To keep the reel from rotating while tightening the tang drive, place a block of wood between the reel and bedknife.

IMPORTANT: Backlapping at the incorrect reel speed may loosen and strip the tang drive threads. Refer to the Cutting Unit Operator's Manual for backlapping procedure.

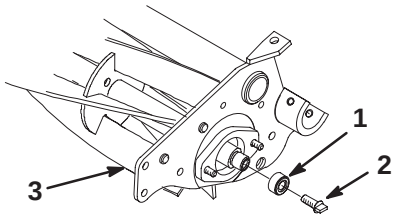

Figure 2

1. Magnet
2. Tang drive
3. Cutting unit reel assembly

5. At the rear of the cutting unit, remove the carriage bolt and locknut securing the rear height-of-cut brackets to the cutting unit side plates (Fig. 3). Remove the height-of-cut adjustment bolts. Remove the height-of-cut brackets and rear roller. Set all parts aside.

©The Toro Company – 1999
All Rights Reserved

Printed in USA

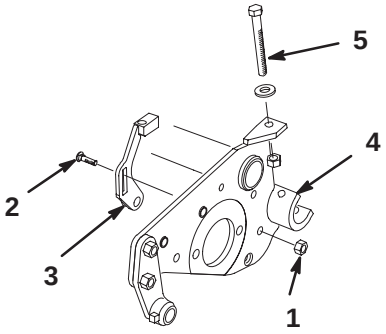

Figure 3

1. Locknut
2. Carriage bolt
3. Rear height-of-cut bracket
4. Cutting unit frame
5. Height-of-cut adjustment bolt

---

6. Remove the bedbar adjuster bolts on each end of the cutting unit. Remove the bedbar. Install the new 1-1/2" (38mm) long bolts in the upper holes and the 1" (25mm) long bolts in the lower holes of the cutting unit as shown in Figure 4.

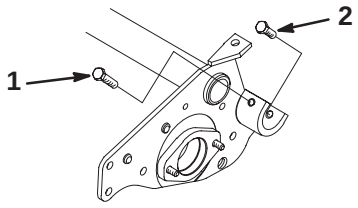

Figure 4

1. 1-1/2" long bolt
2. 1" long bolt

---

7. Loosen the set screw and remove the roller brush shaft from the bearing housing on the right end of the brush assembly.

8. Install the rear roller between the new height-of-cut brackets and loosely secure the roller shaft with the set screws (Fig. 5).

9. Install bedbar, while loosely securing height–of–cut brackets w/rear roller to cutting unit with carriage bolts and locknuts previously removed (Fig. 6).

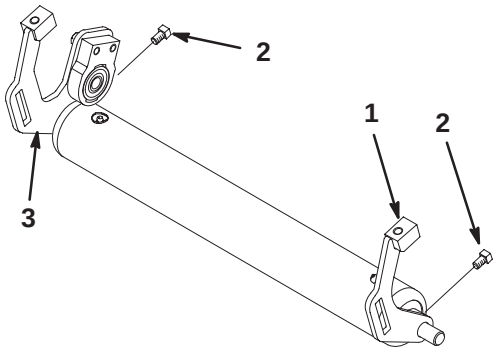

Figure 5

1. Left-hand height-of-cut bracket
2. Set screw
3. Right-hand height-of-cut bracket

---

10. Tighten carriage bolt and locknut securing right-hand height-of-cut bracket to cutting unit while assembling the height-of-cut adjustment bolt, washer and nut as shown in figure 6.

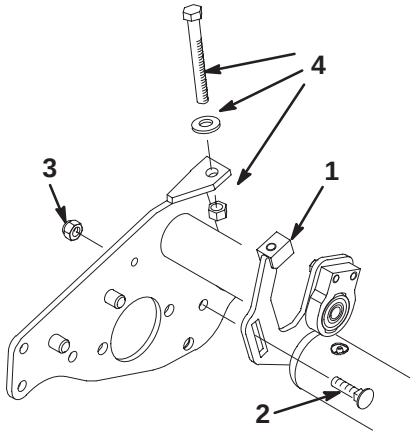

Figure 6

1. Right-hand height-of-cut bracket
2. Carriage bolt
3. Locknut
4. Height-of-cut adjustment bolt, washer and nut

---

11. Remove the plastic belt cover from the brush kit drive assembly (Fig. 7). Remove the hex extension (Fig. 8).

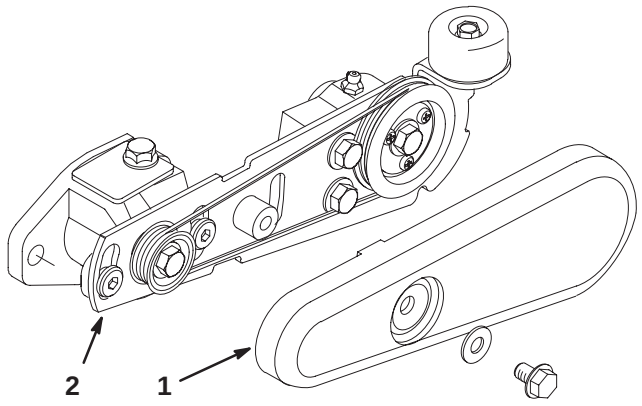

Figure 7

1. Belt cover
2. Drive assembly

12. Attach the new left-hand height-of-cut bracket to the cutting unit using the existing carriage bolt. Secure the hex extension to the bolt (Fig. 8).

13. Assemble the height-of-cut adjustment bolt, washer and nut previously removed (Fig. 8).

14. Reset the reel to bedknife contact and set the height of cut for the cutting unit (see Cutting Unit Operator's Manual).

15. While inserting the roller brush shaft into the bearing housing on the right end of the cutting unit, slide the drive assembly onto the cutting unit bearing housing making sure that the tang drive is aligned in the roller brush housing. Place the offset washer between the hex extension and the drive assembly and loosely secure them with a socket head screw and washer (Fig. 8).

16. Secure the drive assembly to the bearing housing on the cutting unit with the (2) 3/8" locknuts provided (Fig. 8).

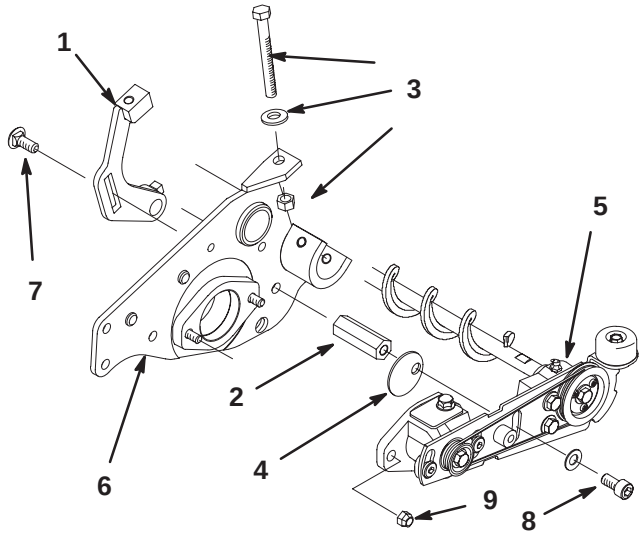

Figure 8

1. Left-hand height-of-cut bracket
2. Hex extension
3. Height-of-cut adjustment bolt, washer and nut
4. Offset washer
5. Drive assembly
6. Cutting unit frame
7. Carriage bolt
8. Socket head screw
9. 3/8" locknut

17. Rotate the right-hand bearing locking collar clockwise (in the direction of rotation) by hand until the collar is tight on the roller brush shaft (Fig. 9).

18. Tighten the collar further by placing a punch in the blind hole of the collar and striking it sharply in the direction of rotation (Fig. 9). Retighten the collar set screw to secure the adjustment.

Note: The left-hand bearing locking collar has been set at the factory.

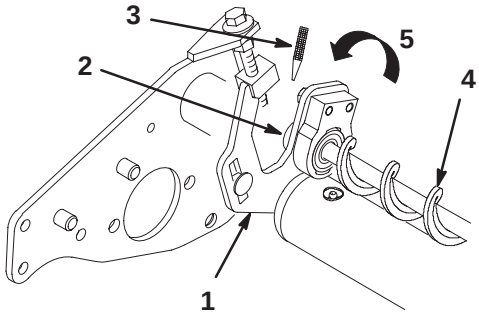

Figure 9

1. Right-hand height-of-cut bracket
2. Bearing locking collar
3. Punch
4. Roller brush
5. Direction of rotation

19. Midway between the pulley there should be 3/32" deflection with a force of 1 lb. applied at a right angle to the belt (Fig. 10). Belt tension should be checked after 50 hours and every 250 hours after that. If necessary, adjust the belt tension as follows:

A. Loosen the (2) capscrews securing the bearing housing to the pivot plate.

B. Move the bearing housing either forward of backward to achieve the correct belt tension (Fig. 10).

C. Tighten the (2) capscrews to lock the adjustment (Fig. 10)

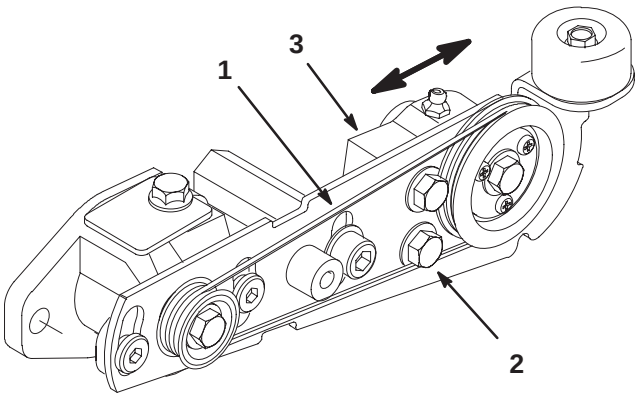

Figure 10

1. Check belt tension here
2. Bearing housing capscrews
3. Bearing housing

20. Pivot the brush assembly onto the roller. The brush should lightly contact the **entire length** of the roller.

Note: The roller brush may not be parallel to the rear roller.

21. While holding the hex extension with a wrench, tighten the socket head screw to 55–60 ft-lb. Make sure the brush to roller contact does not change.

22. Attach the belt cover to the drive assembly. Tighten the screw securely, but do not over tighten as damage to the cover may occur.

23. Lubricate all bearing and bushings with No. 2 General Purpose Lithium Base Grease (Fig. 11).

Note: Grease will purge through the bearings in the roller brush bearing housing to remove contaminants. Wipe excess grease from the drive pulley and belt after lubricating.

IMPORTANT: Lubricate grease fittings immediately after every washing.

24. For Reelmaster 5100 and 5300, remove the screw, tab, and plug in the top of the roller brush housing (Fig. 11). Install the speed sensor previously removed and adjust according to the Traction Unit Operator's Manual.

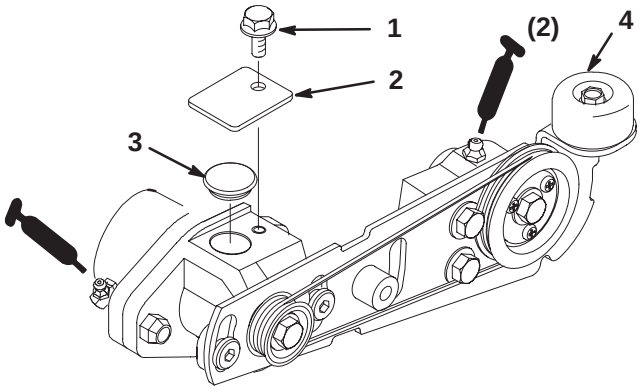

Figure 11

1. Screw
2. Tab
3. Plug
4. Bumper and screw

25. Repeat steps 3 through 24 with the remaining cutting units.

26. Remove the bumper and screw on all cutting units except the front-center (Fig. 11).

IMPORTANT: Use caution if tipping the cutting unit onto the roller brush. Roller brush mis-adjustment and/or damage to the brush may occur, resulting in poor performance or a damaged brush. After completion of cutting unit maintenance, check the brush to roller contact and retorque the socket head mounting screw to 55–60 ft-lb.