Form No. 3432-195 Rev B

TORO®

Count on it.

Parts Catalog

Power Clear® 821 QZE

Snowthrower

Model No. 38757—Serial No. 400000000 and Up

Register at www.Toro.com.
Original Instructions (EN)

3432-195 B

Ordering Replacement Parts

To order replacement parts, please supply the part number, the quantity, and the description of each part desired.

Understanding Reference Numbers

Each identified part in an illustration has a reference number. The reference number for a part also appears in the parts list, along with other information about the part.

This catalog uses two special reference number formats, one to indicate parts in a service assembly and another to indicate the quantity of a given part in an illustration.

Service Assembly Reference Numbers

Parts in service assemblies have reference numbers in the form a:b. The a represents the reference number of the entire service assembly and the b represents a sequential number unique to each part within the service assembly.

For example, a wheel assembly might be identified by reference number 6, the tire by 6:1, the valve by 6:2, and the wheel by 6:3. When you order the assembly identified by reference number 6, you receive all parts identified by reference numbers 6:1,6:2, and 6:3. However, you may also order any part individually. Reference numbers of this type appear in illustration and in parts lists.

Reference Numbers Indicating Quantity

In an illustration, if a reference number indicates more than one part, the reference number has the form nX y. The n represents the quantity of the part, the X is the multiplication symbol, and the y represents the reference number.

For example, in an illustration, the reference number 2X 37 means that two of the parts identified by reference number 37 are indicated.

Contents

Chute and Wheel Assembly 4
Rotor Drive Assembly 6
Rotor Assembly 8
Engine Assembly 10
Fuel System and Carburetor Assembly 12
Intake and Exhaust Assembly 14
Ignition and Electrical Assembly 16
Crankcase Assembly 18
Governor Assembly 20
Piston and Head Assembly 22
Blower Housing and Shrouds Assembly 24
Shroud and Chute Assembly 26
Handle Assembly 28
Handle Chute Control Assembly 30
Attachments and Accessories 32

© 2019—The Toro® Company
8111 Lyndale Avenue South
Bloomington, MN 55420

Contact us at www.Toro.com.
Printed in the USA.
All Rights Reserved

Chute and Wheel Assembly

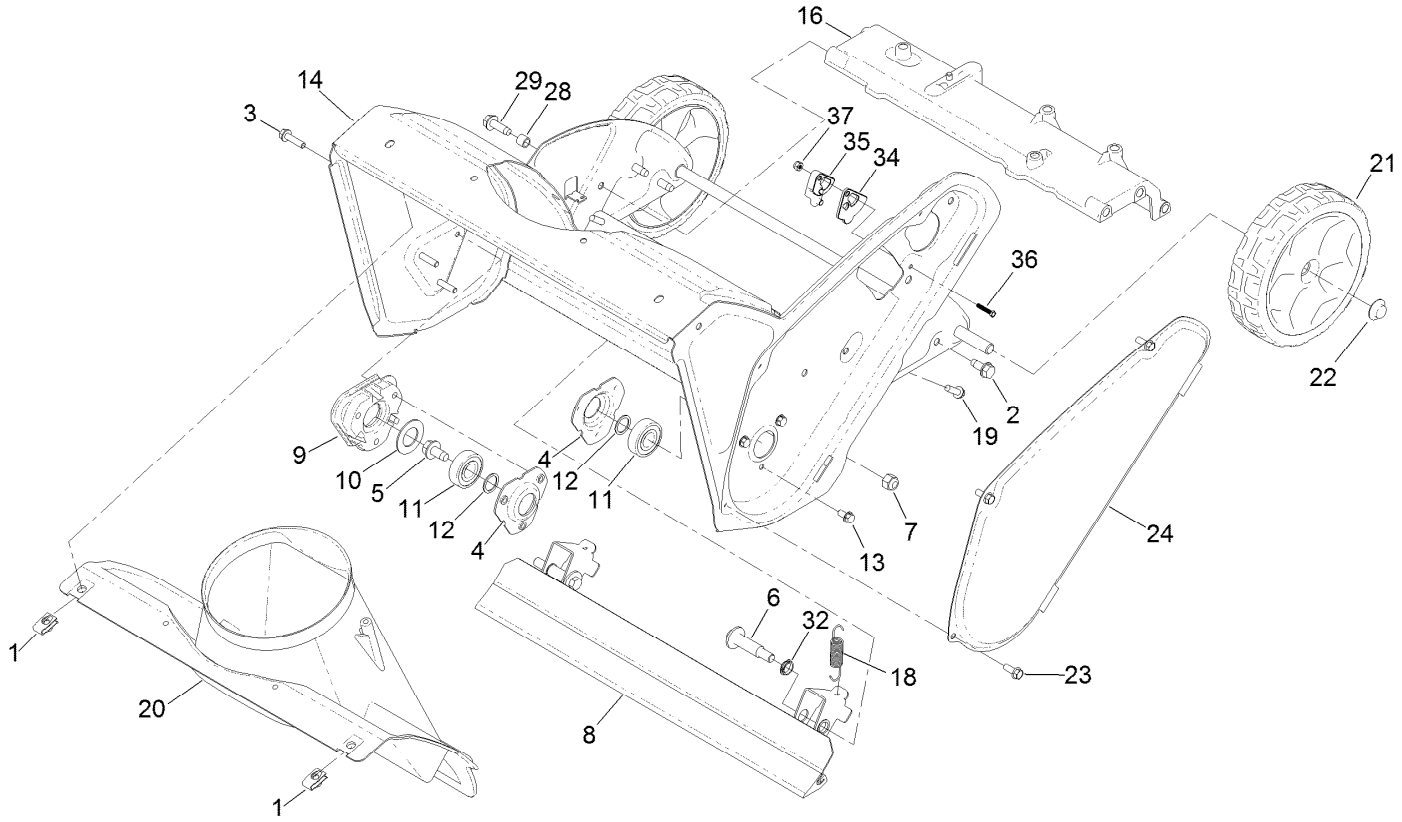

Chute and Wheel Assembly (continued)

Ref.	Part Number	Qty.	Description
1	107069	2	Clip
2	32144-11	4	Screw-HWH
3	32144-86	3	Screw-HWHTF
4	136-7134	2	Flange-Bearing
5	110-9380	1	Screw-HWH
6	136-7198	2	Bolt-Shoulder
7	3296-39	2	Nut-Lock, NI
8	139-3536	1	Scraper ASM
9	114-3781	1	Spacer-Bearing, RH
10	110-9353	1	Washer-Rubber
11	38-7820	2	Bearing-Ball
12	52-7280	2	Washer-Thrust
13	32144-4	3	Screw-HWH
14	108-4868-03	1	Housing-Auger
16	130-9765	1	Brace-Frame

Ref.	Part Number	Qty.	Description
18	108-4906	2	Spring-Extension
19	46-8091	3	Screw-HWH
20	108-4871	1	Chute-Lower
21	138-8783	2	Wheel ASM, 7 Inch
22	32112-14	2	Nut-Push
23	32144-85	3	Screw-HWH
24	108-4893-03	1	Cover-Belt
28	136-7148	2	Spacer-Grommet
29	130-9795	2	Screw-HWHTF
32	139-3509	4	Bushing-Nyliner
34	139-3564	1	Cap-Guide, Cable
35	139-3565	1	Guide-Cable
36	360-0272	1	Screw, Machine, Nozzle, 8-32 X 7/8"
37	520-0006	1	Nut-Hex, Nylock

Rotor Drive Assembly

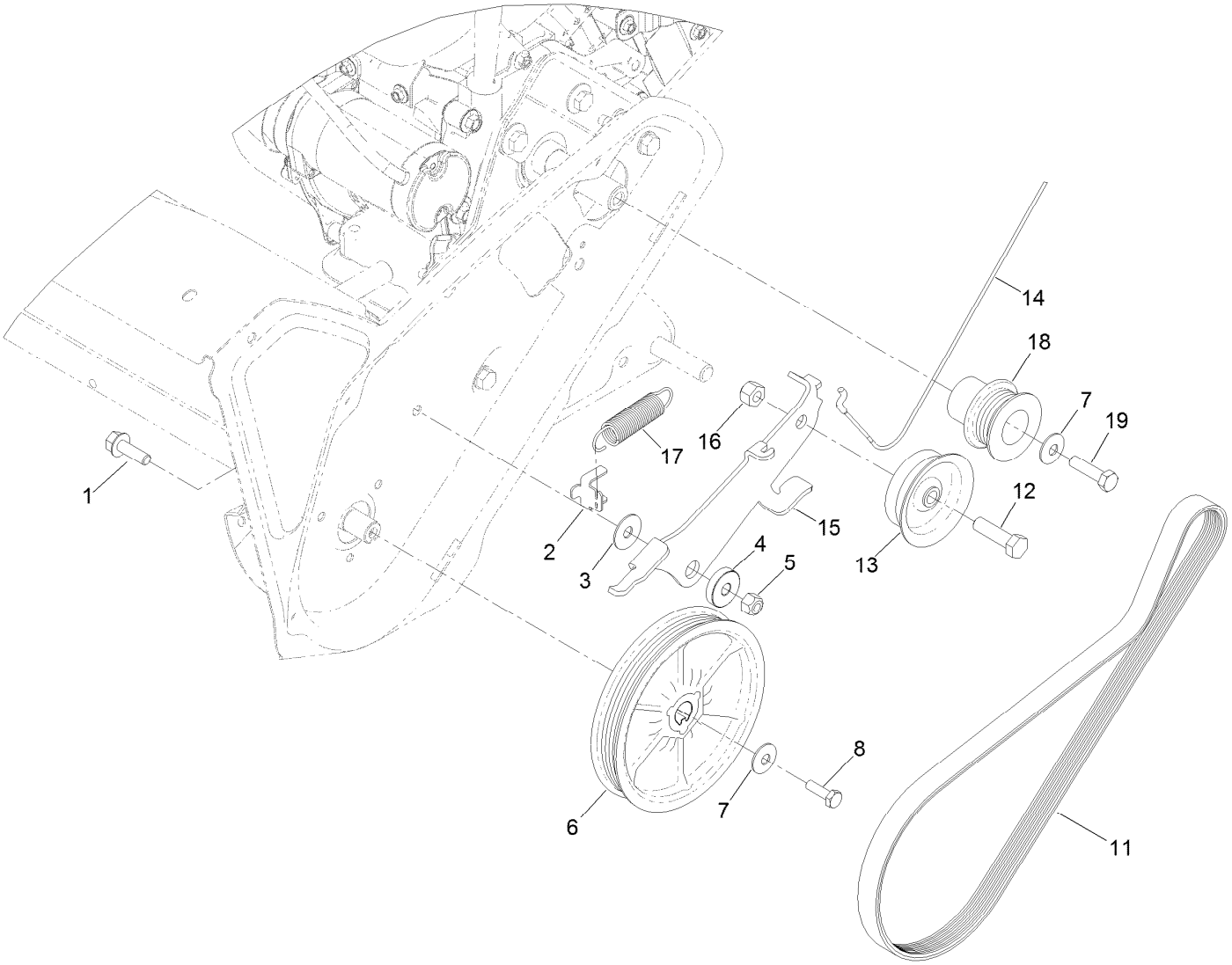

Rotor Drive Assembly (continued)

Ref.	Part Number	Qty.	Description
1	3234-29	1	Screw-HHF
2	136-7133	1	Clip-Spring
3	108-4925	1	Washer
4	108-4916	1	Bushing-Pivot
5	3296-29	1	Nut-Lock, NI
6	138-8720	1	Pulley-Rotor
7	3290-456	2	Washer-Belleville
8	140-1002	1	Screw-HH
11	138-8723	1	Belt-Poly

Ref.	Part Number	Qty.	Description
12	323-29	1	Screw-HH
13	139-3513	1	Pulley-Idler, Flat
14	140-1000	1	Cable-Clutch
15	136-7138	1	Arm-Idler
16	32152-2	1	Nut-Lock, Cone
17	121-6630	1	Spring-Extension
18	138-8722	1	Pulley-Engine
19	121-6646	1	Screw-HH

Rotor Assembly

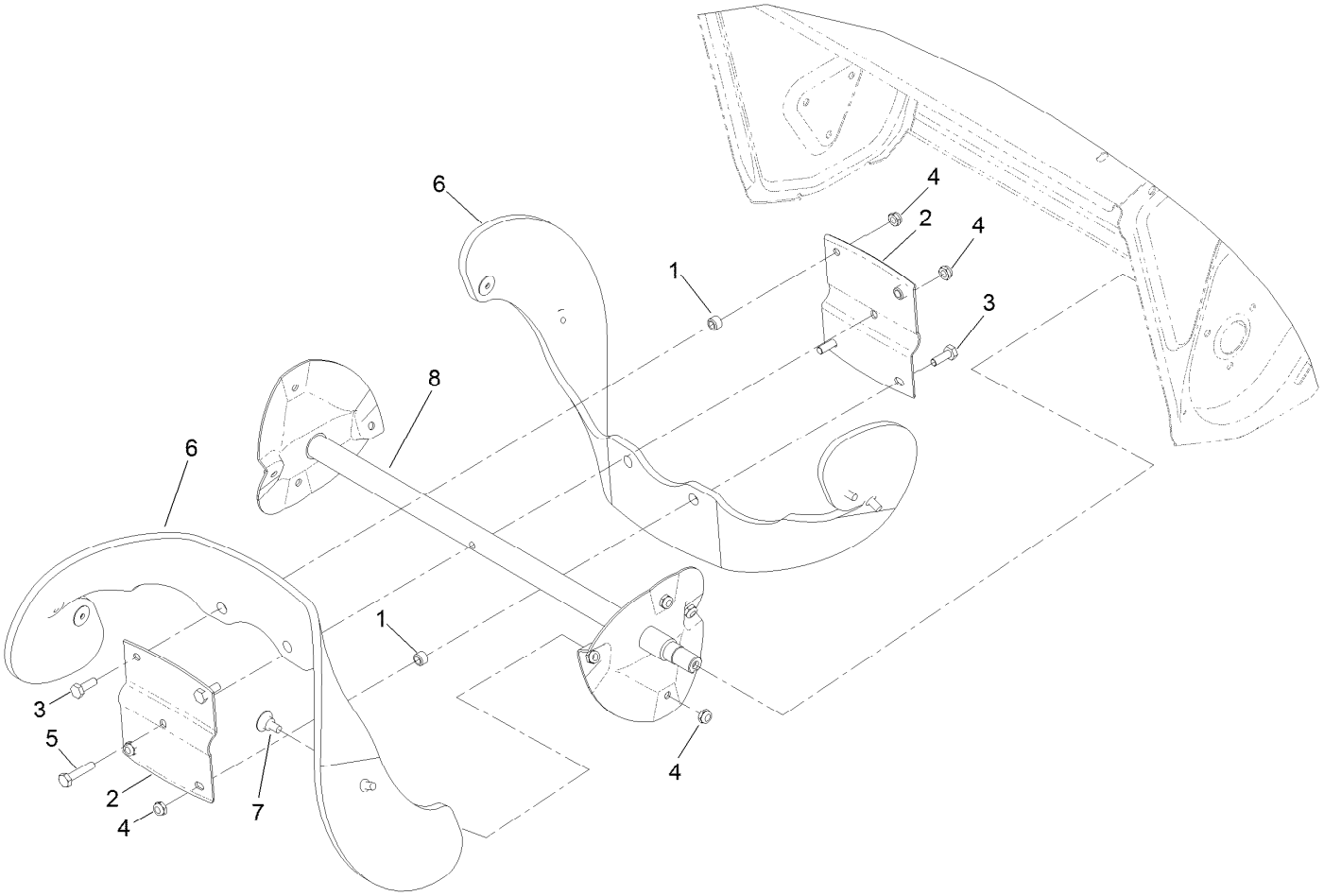

Rotor Assembly (continued)

Ref.	Part Number	Qty.	Description
1	55-9370	4	Spacer-Blade, Rotor
2	66-6600-03	2	Half-Rotor
3	321-4	4	Screw-HH
4	3296-56	13	Nut-Lock, NI
5	321-8	1	Screw-HH
6	99-9313	2	Blade-Rotor
7	84-1971	8	Screw
8	131-6488-03	1	Rotor

Engine Assembly

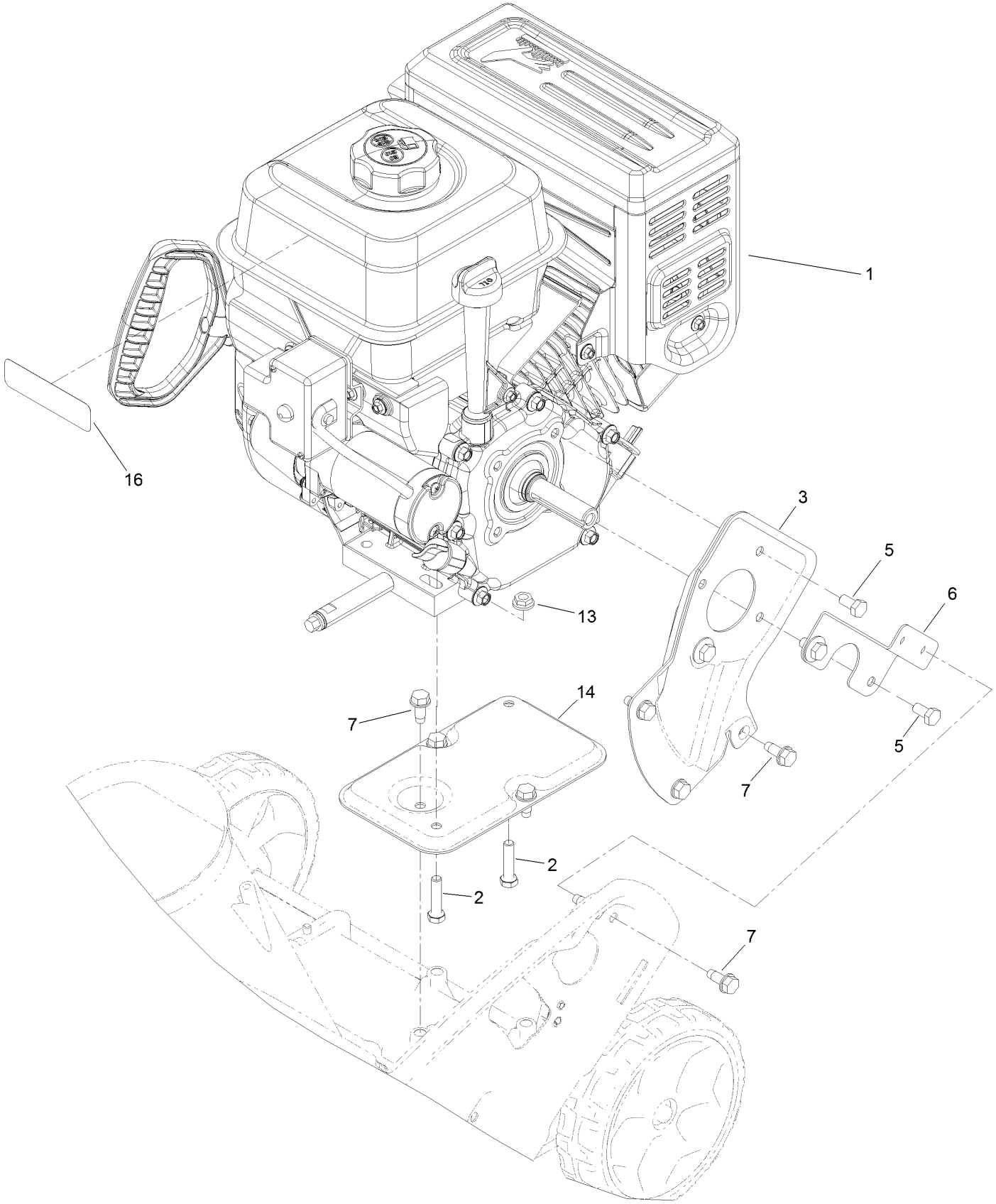

Engine Assembly (continued)

Ref.	Part Number	Qty.	Description
1	138-8770	1	Engine-G250Fs-4
2	322-17	2	Screw-HH
3	108-4892-03	1	Plate-Engine, PTO
5	99-5132	4	Bolt
6	110-9354-03	1	Support-Engine, Side
7	32144-11	7	Screw-HWH
13	32128-20	2	Nut-HF
14	117-6037-03	1	Support-Engine
16	139-3523	1	Decal-Engine

Fuel System and Carburetor Assembly

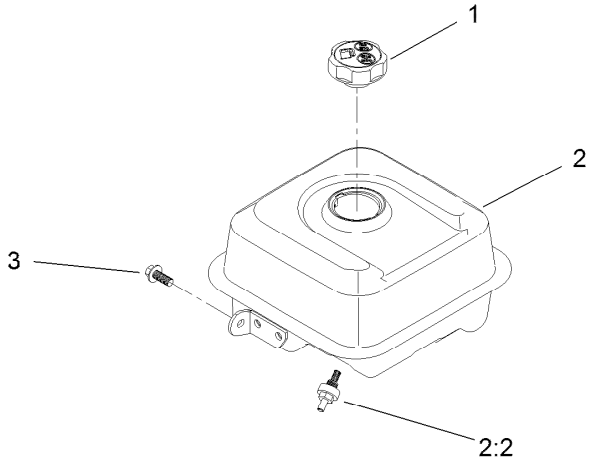

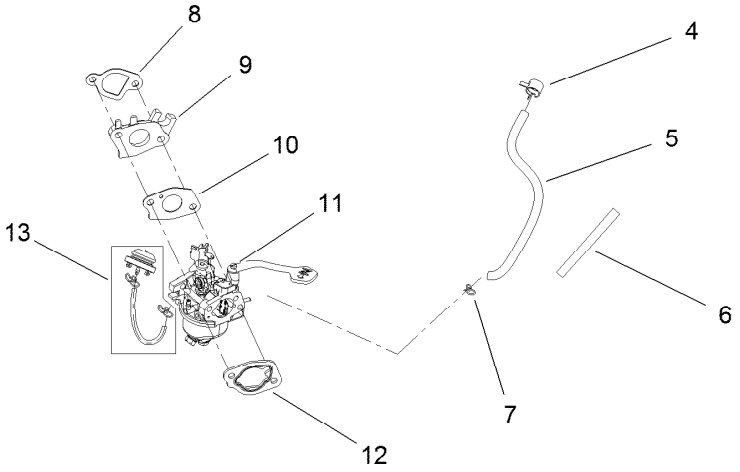

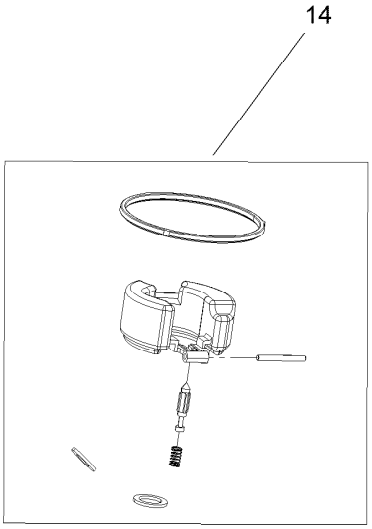

Fuel System and Carburetor Assembly (continued)

Ref.	Part Number	Qty.	Description
1	133-9823	1	Cap-Fuel
2	133-1553	1	Fuel Tank And Filter ASM
2:2	127-9065	1	Filter-Fuel
3	121-0294	1	Screw-HHF
4	127-9120	1	Clamp-Hose
5	133-1537	1	Hose-Fuel
6	133-9997	1	Sleeve-Abrasion
7	121-0087	1	Clamp-Hose
8	133-1531	1	Gasket-Carburetor
9	133-1532	1	Insulator-Carburetor
10	133-1533	1	Gasket-Carburetor
11	139-0700	1	Carburetor ASM
12	121-0080	1	Gasket-Carburetor
13	127-9079	1	Primer Kit
14	127-9395	1	Internal Carb Service Kit
99	139-0711	1	High Altitude Kit ●

● Not illustrated

Intake and Exhaust Assembly

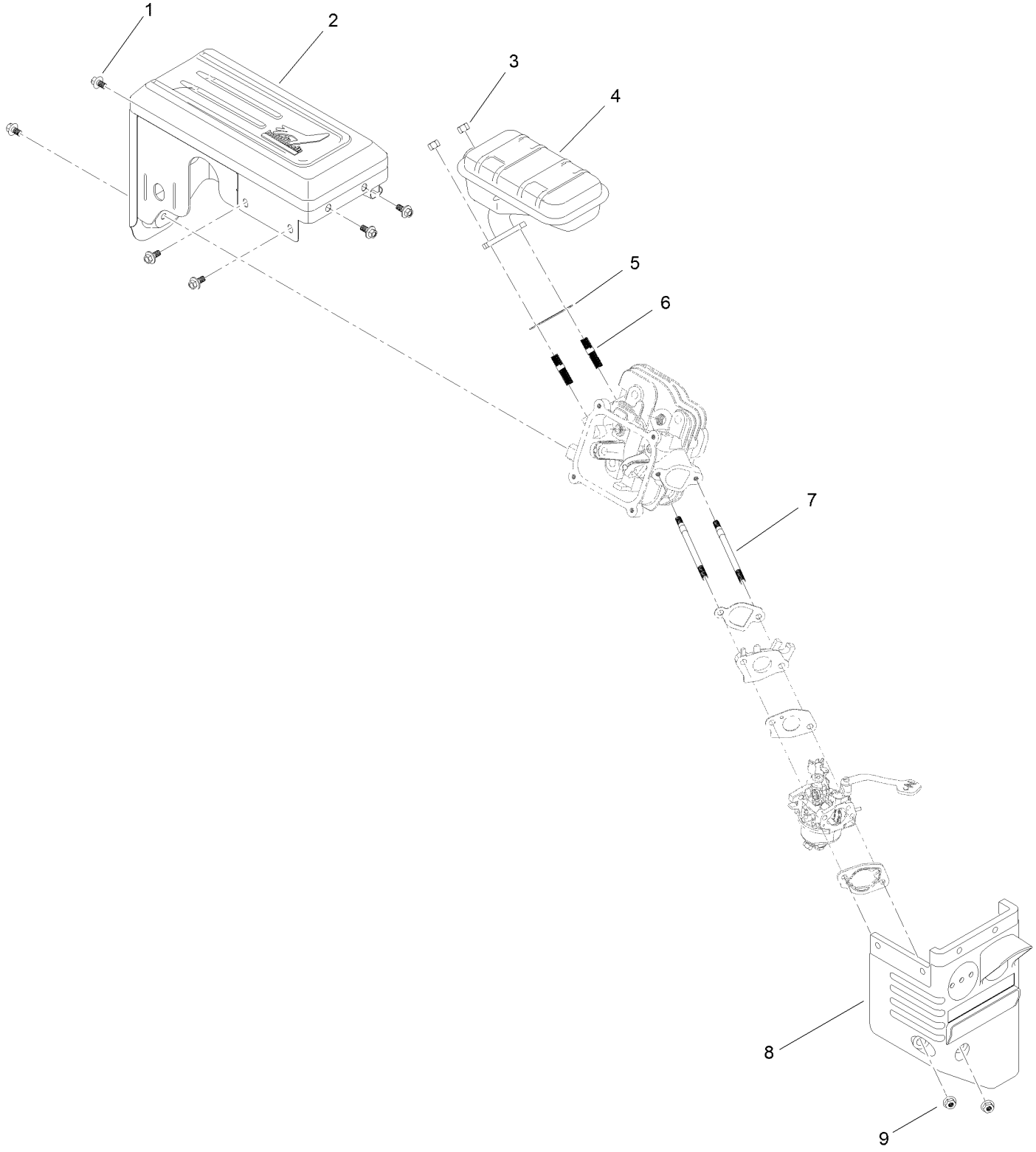

Intake and Exhaust Assembly (continued)

Ref.	Part Number	Qty.	Description
1	121-0294	6	Screw-HHF
2	133-1541	1	Muffler Shroud ASM
3	121-0199	2	Nut-HH
4	133-1540	1	Muffler ASM
5	133-1539	1	Gasket-Exhaust
6	121-0464	2	Stud-Exhaust
7	121-4112	2	Stud-Intake
8	127-9112	1	Box-Heater
9	121-0308	2	Nut-Flange

Ignition and Electrical Assembly

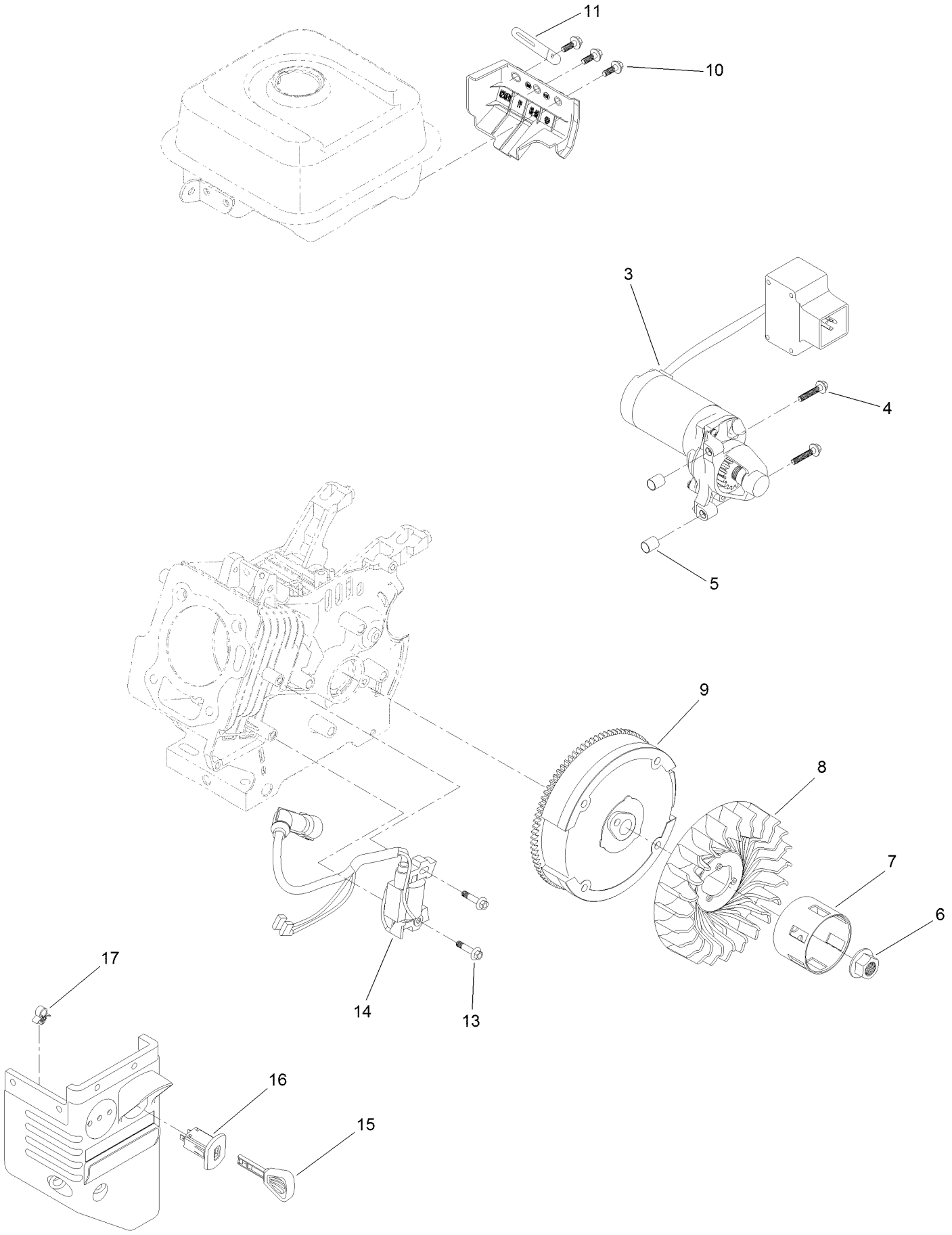

Ignition and Electrical Assembly (continued)

Ref.	Part Number	Qty.	Description
3	139-0701	1	Motor-Starter
4	133-1546	2	Screw-Flange
5	121-0055	2	Pin-Dowel
6	121-0047	1	Nut-Flange
7	133-1527	1	Cup-Starter
8	133-1526	1	Fan-Cooling
9	133-1525	1	Flywheel And Ring Gear ASM
10	127-9123	3	Screw-HHF
11	121-0017	1	Clip-Harness, Wire
13	121-0097	2	Screw-HHF
14	136-7769	1	Ignition Coil ASM
15	117-7728	1	Key
16	121-0283	1	Switch-Key
17	121-0326	1	Clip

Crankcase Assembly

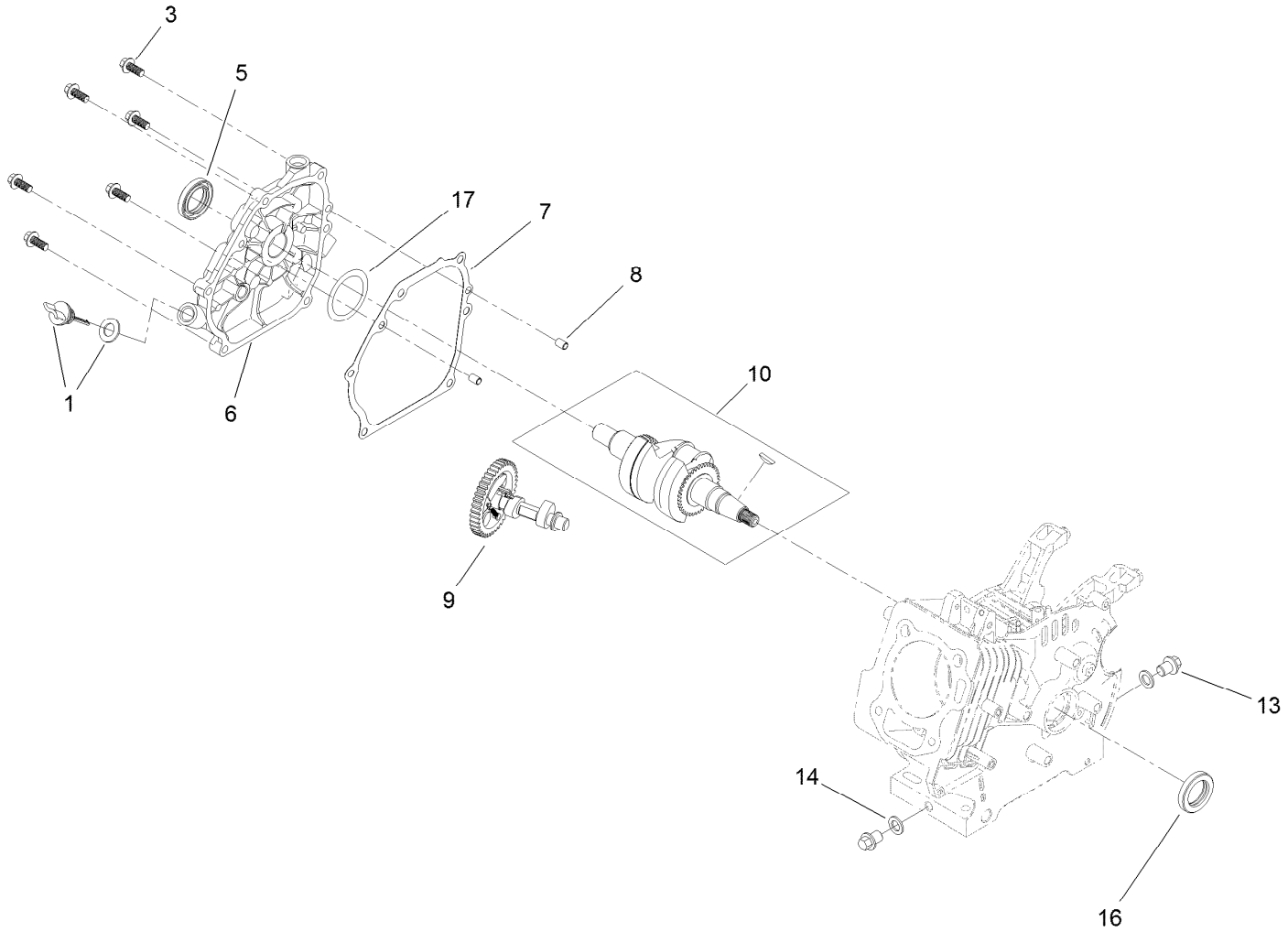

Crankcase Assembly (continued)

Ref.	Part Number	Qty.	Description
1	127-9374	1	Dipstick And O-Ring Kit
3	121-4114	6	Screw-HHF
5	133-1516	1	Seal-Oil
6	139-0702	1	Cover-Crankcase
7	127-9493	1	Gasket-Cover, Crankcase
8	121-0054	2	Pin-Dowel
9	133-9991	1	Camshaft ASM
10	139-0704	1	Crankshaft ASM
13	121-0030	2	Screw-HHF
14	121-0048	2	Washer-Plain
16	133-9864	1	Seal-Oil
17	133-9863	1	Washer-Thrust

Governor Assembly

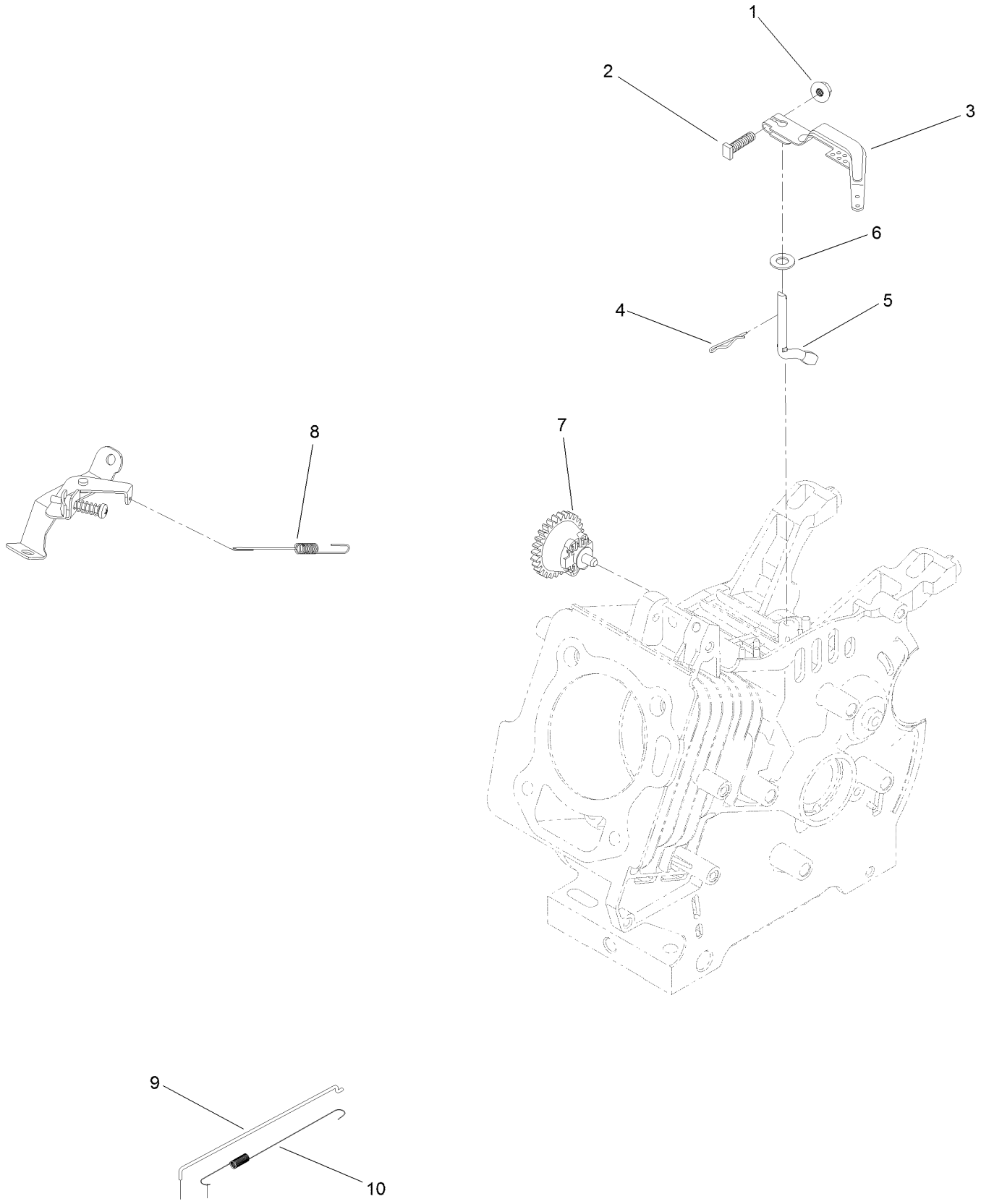

Governor Assembly (continued)

Ref.	Part Number	Qty.	Description
1	120-4236	1	Nut-Flange
2	120-4238	1	Bolt-Arm, Governor
3	121-0155	1	Arm-Governor
4	120-4256	1	Pin-Hair
5	133-9995	1	Shaft-Governor
6	121-0498	1	Washer-Plain
7	136-7762	1	Governor Gear ASM
8	139-0699	1	Spring-Governor
9	133-1535	1	Rod-Governor
10	133-1536	1	Spring-Return, Throttle

Piston and Head Assembly

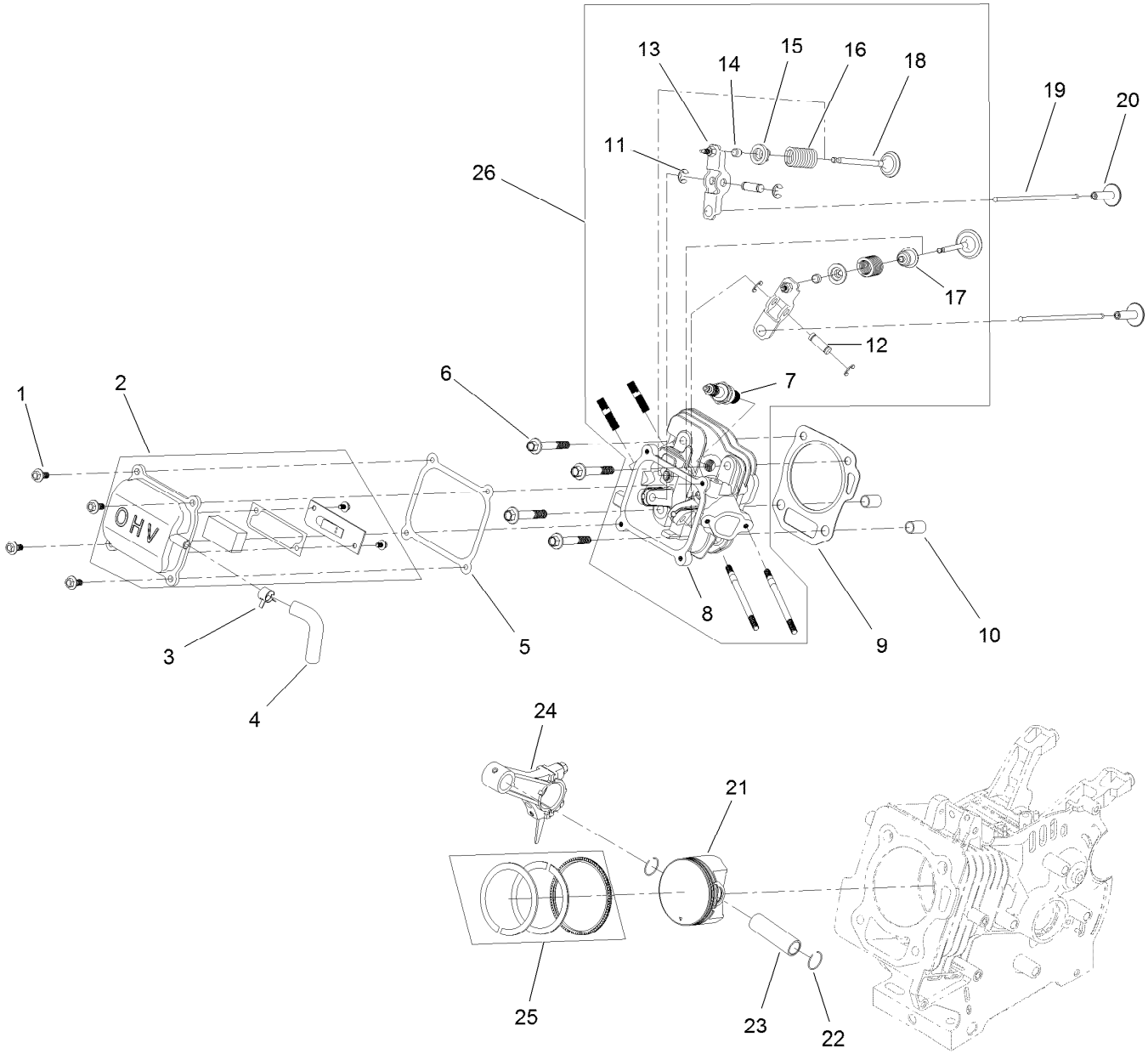

Piston and Head Assembly (continued)

Ref.	Part Number	Qty.	Description
1	120-4454	4	Screw-HHF
2	133-1500	1	Valve Cover ASM
3	133-1558	1	Clamp-Hose
4	133-9990	1	Tube-Breather
5	133-1507	1	Gasket-Cover, Valve
6	133-1508	4	Screw-Flange
7	81-3250	1	Spark Plug
8	133-1509	1	Head-Cylinder
9	133-1510	1	Gasket-Head
10	120-4200	2	Pin-Dowel
11	133-1511	4	E-Clip
12	133-1512	2	Pin-Arm, Rocker
13	133-1513	2	Rocker Arm ASM
14	121-4116	2	Rotator-Valve
15	121-4117	2	Retainer-Spring, Valve
16	127-9014	2	Spring-Valve
17	121-4202	1	Seal-Stem, Valve
18	133-1515	1	Set-Valve
19	133-1514	2	Rod-Push
20	127-9015	2	Tappet-Valve
21	133-1522	1	Piston
22	121-0313	2	Clip-Pin, Piston
23	121-4128	1	Pin-Piston
24	121-4123	1	Connecting Rod ASM
25	133-1521	1	Set-Ring, Piston
26	133-9867	1	Complete Head ASM

Blower Housing and Shrouds Assembly

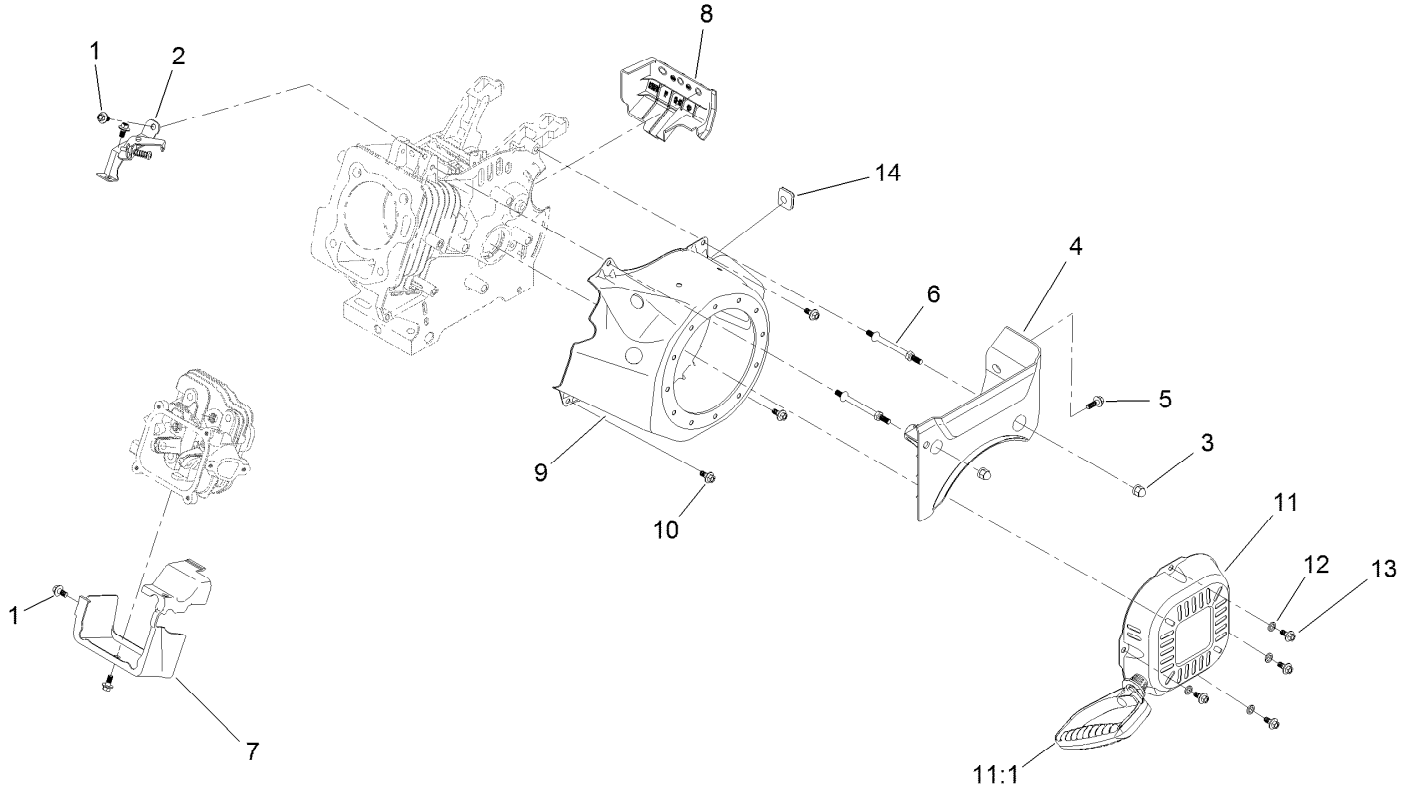

Blower Housing and Shrouds Assembly (continued)

Ref.	Part Number	Qty.	Description
1	121-0116	4	Screw-HHF
2	133-1520	1	Throttle Control ASM
3	127-9383	2	Nut-Acorn
4	133-1544	1	Panel-Front
5	127-9123	1	Screw-HHF
6	127-9110	2	Stud-Mount
7	133-1530	1	Shroud-Head
8	133-1543	1	Panel-Side, Engine

Ref.	Part Number	Qty.	Description
9	133-1528	1	Shroud-Flywheel
10	121-0294	3	Screw-HHF
11	133-1529	1	Recoil ASM
11:1	121-0287	1	Handle-Recoil
12	127-9380	4	Washer-Plain
13	127-9031	4	Screw-HHF
14	133-1548	1	Grommet-Rubber

Shroud and Chute Assembly

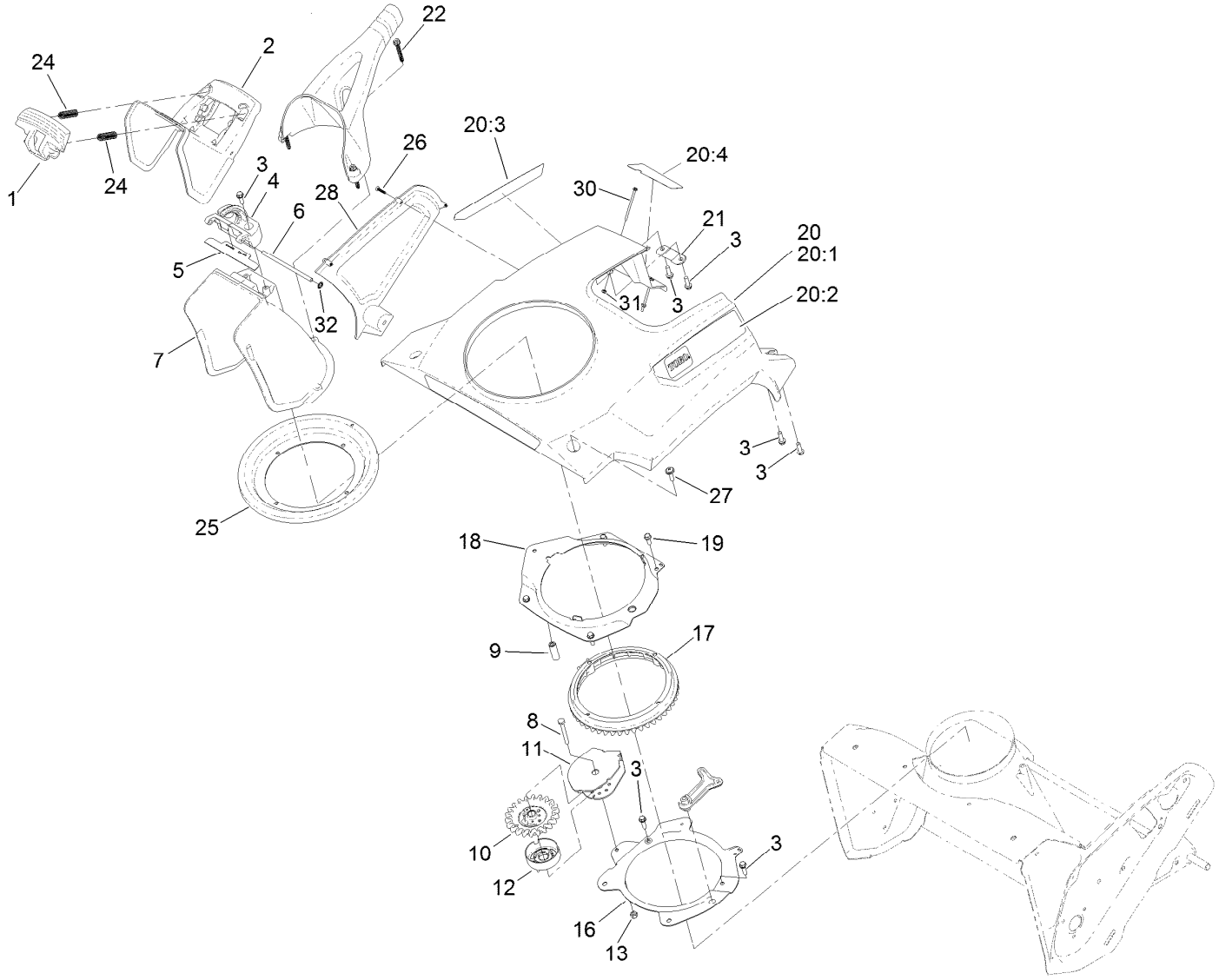

Shroud and Chute Assembly (continued)

Ref.	Part Number	Qty.	Description
1	108-4941	1	Trigger-Deflector
2	117-9121	1	Deflector-Chute, CE
3	46-8091	10	Screw-HWH
4	108-4942	1	Hinge-Ratchet, Deflector
5	114-3790	1	Seal-Deflector
6	136-8672	1	Pin-Hinge, Deflector
7	108-4939	1	Chute
8	321-18	1	Screw-HH
9	108-4877	1	Spacer-Sleeve, Pinion
10	108-4875	1	Pinion-Gear
11	108-4900-03	1	Bracket-Pinion
12	114-3792	1	Retainer-Cable
13	3296-42	1	Nut-Lock, NI
16	108-4883-03	1	Ring-Support, Chute
17	108-4882	1	Ring-Chute, Gear
18	108-4874-03	1	Retainer-Ring, Chute

Ref.	Part Number	Qty.	Description
19	32144-85	3	Screw-HWH
20		1	Shroud ASM, W/Decals ●
20:1	138-8797	1	Shroud ASM, W/Artwork
20:2	139-3522	1	Decal-Shroud LH
20:3	139-3515	1	Decal-Shroud RH
20:4	139-3506	1	Decal-Engine, Electric Start
21	138-8757	2	Retainer-Shroud
22	108-4946	3	Screw-Plastite
24	136-7136	2	Spring-Compression
25	114-3772	1	Seal-Ring, Chute
26	94-4496	1	Screw-PPH
27	110-9361	2	Screw-PPH
28	138-8754	1	Cover-Side
30	117-9106	2	Screw-HWH
31	3296-9	2	Nut-Hex
32	104-8310	1	Ring-Retaining

● Not serviced separately

Handle Assembly

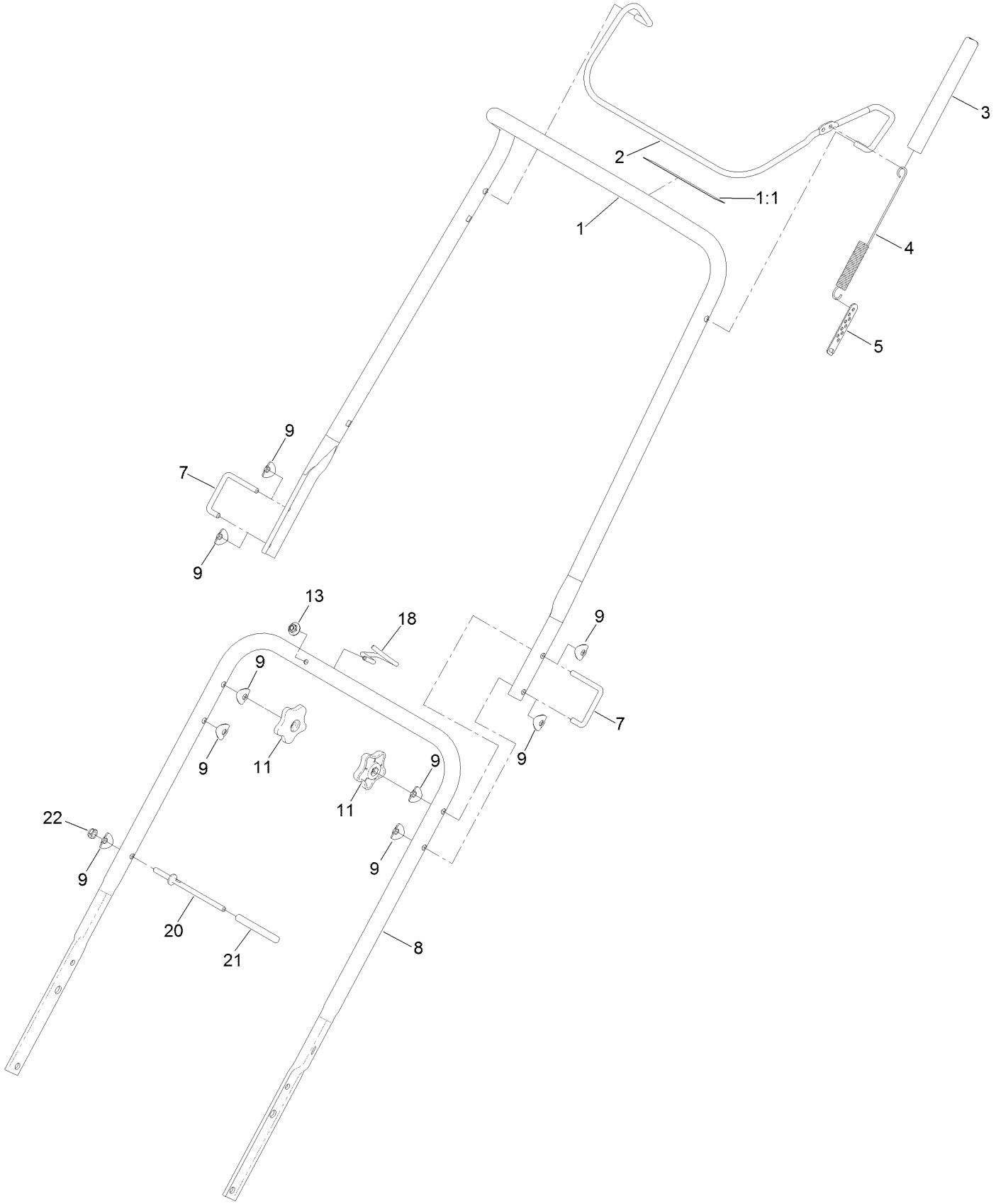

Handle Assembly (continued)

Ref.	Part Number	Qty.	Description
1	114-3768	1	Upper Handle ASM
1:1	94-2577	1	Decal-Drive, Rotor
2	114-3780-03	1	Bail-Control
3	114-3796	1	Cover-Spring
4	136-7146	1	Spring-Extension, Clutch
5	136-7126	1	Adjuster-Cable, Clutch
7	136-7130	2	Lock-Handle
8	138-8760-03	1	Handle-Lower
9	107-3844	3	Washer
11	114-3779	2	Knob-Handle
13	114-3778	1	Nut-HF
18	139-3543	1	Guide-Rope
20	139-3501	1	Support-Switch Box
21	139-3502	1	Cap-Support
22	3296-47	1	Nut-Lock, NI

Handle Chute Control Assembly

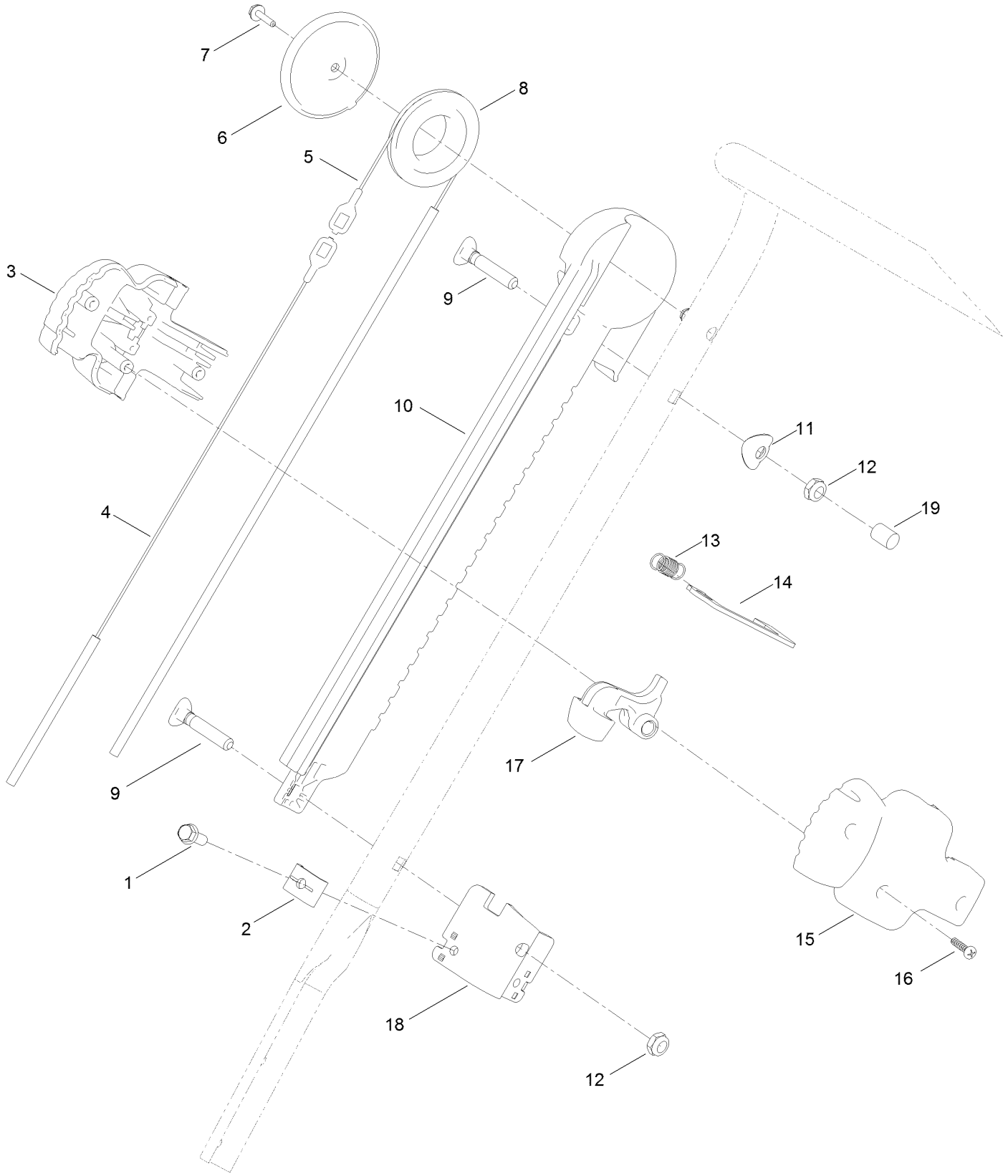

Handle Chute Control Assembly (continued)

Ref.	Part Number	Qty.	Description
1	32144-85	2	Screw-HWH
2	136-7191	2	Clamp-Cable
3	108-4912	1	Handle-Slider, RH
4	108-4897	1	Cable-Chute, Short
5	108-4898	1	Cable-Chute, Long
6	108-4931	1	Cover-Pulley
7	98-1375	1	Screw-HWH
8	108-4907	1	Pulley-Slider
9	107-3018	2	Screw-Handle
10	108-4899	1	Track-Slider
11	107-3844	1	Washer
12	3296-47	2	Nut-Lock, NI
13	108-4914	1	Spring-Trigger
14	136-7131	1	Lock Plate-Chute
15	108-4911	1	Handle-Slider, LH
16	94-4496	3	Screw-PPH
17	108-4913	1	Trigger
18	136-7132	1	Bracket-Cable
19	125-7943	1	Cap-Thread, Screw

Attachments and Accessories

For 38757 Power Clear 821 QZE Snowthrower

Product Name	Model/Part
Case of 24 20-Ounce Bottles 5W30 Winter Oil	38908
Toro Snow Oil 0W30 Synthetic 20-Ounce Bottle	38913
Engine Maintenance Kit	138-0700
Paddle Replacement Kit	38261
Long Life Rotor Blade Kit	38205
Toro Single Stage Cover	490-7464
Plain Single Stage Cover	490-7465

Notes:

Notes:

Notes:

TORO®

Count on it.