TORO

MODEL NOS. 55002-900001 & UP (935) 1969
55050-900001 & UP (935E)

PARTS CATALOG

935 AND 935E LAWN TRACTOR 7 H.P.

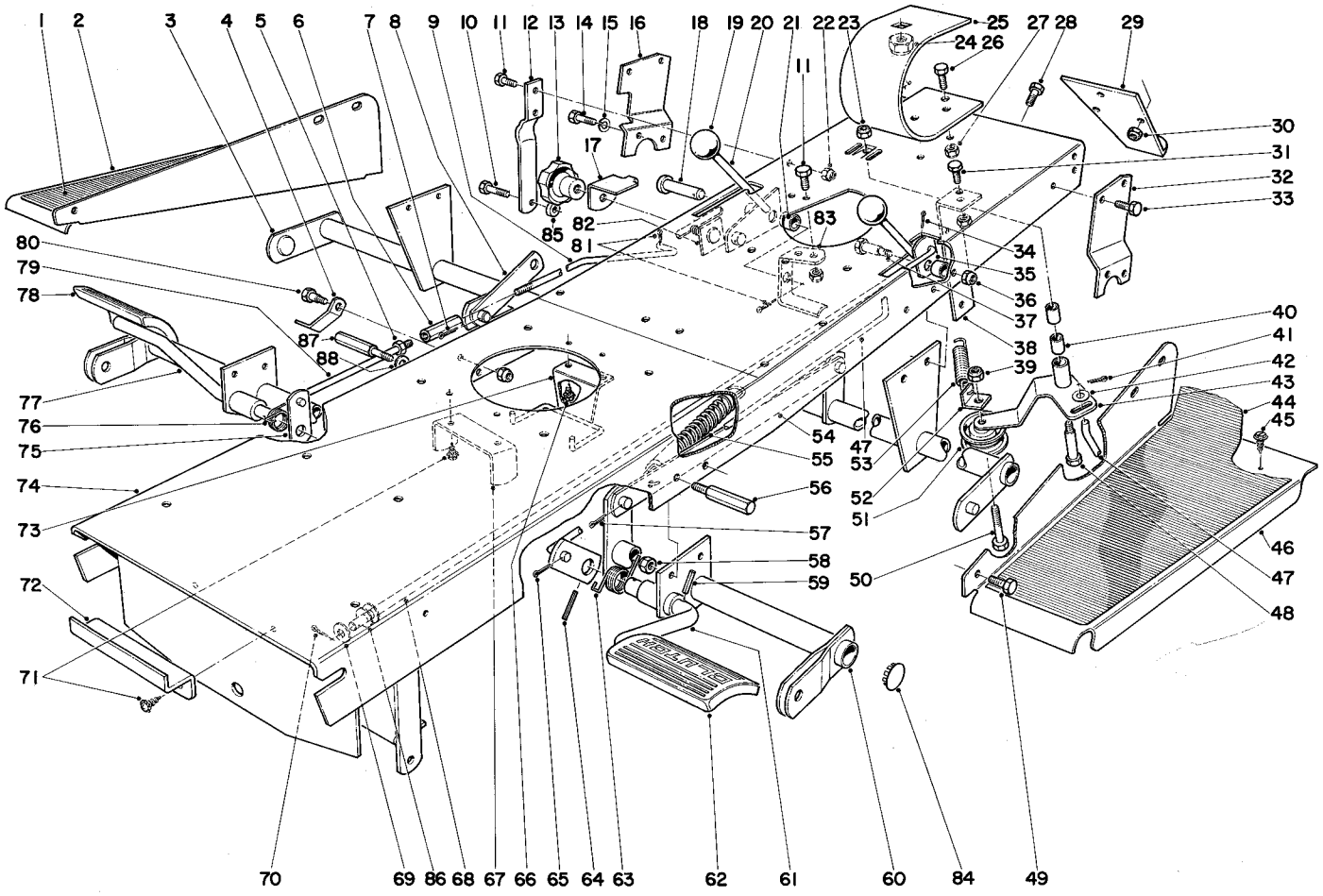

935 AND 935E CHASSIS ASSEMBLY

Ref. No.	Part No.	Description	No. Used
1	7-4128	Pad Right	1
2	7-4033	Foot Rest R.H.	1
3	7-4023	Cross Tube Rear	1
4	7-4263	Pedal Latch	1
5	3218-2	Jam Nut	1
6	7-4193	Screw Brake Adjusting	1
7	3272-7	Cotter Pin	4
8	7-4195	Lift Link	1
9	7-4072	Brake Rod Rear	1
10	322-10	Capscrew	1
11	322-4	Capscrew	2
12	7-4217	Brake Hanger	1
13	7-3902	Knob Height Adjustment	1
14	322-6	Capscrew	4
15	3253-4	Lockwasher	4
16	7-4026	Support Right	1
17	7-4098	Slide	1
18	283-24S	Pin	1

Ref. No.	Part No.	Description	No. Used
19	233-24S	Knob	2
20	7-4076	Lever	1
21	7-4070	Spacer	3
22	32152-1S	Nut	8
23	32152-2S	Locknut	1
24	32152-3S	Nut	1
25	7-4042	Seat Spring	1
26	323-4	Capscrew	2
27	32152-2S	Locknut	2
28	323-4	Capscrew	3
29	7-4032	Hitch	1
30	32152-2S	Nut	3
31	322-2	Capscrew	4
32	7-4025	Support Left	1
33	322-2	Capscrew	4
34	3272-6	Cotter Pin	1
35	7-4073	Lever	1
36	32152-2S	Locknut	1

Copyright 1968 and 1969 By
Toro Manufacturing Corporation
Minneapolis, Minnesota 55420 U.S.A.

Price 25 cents

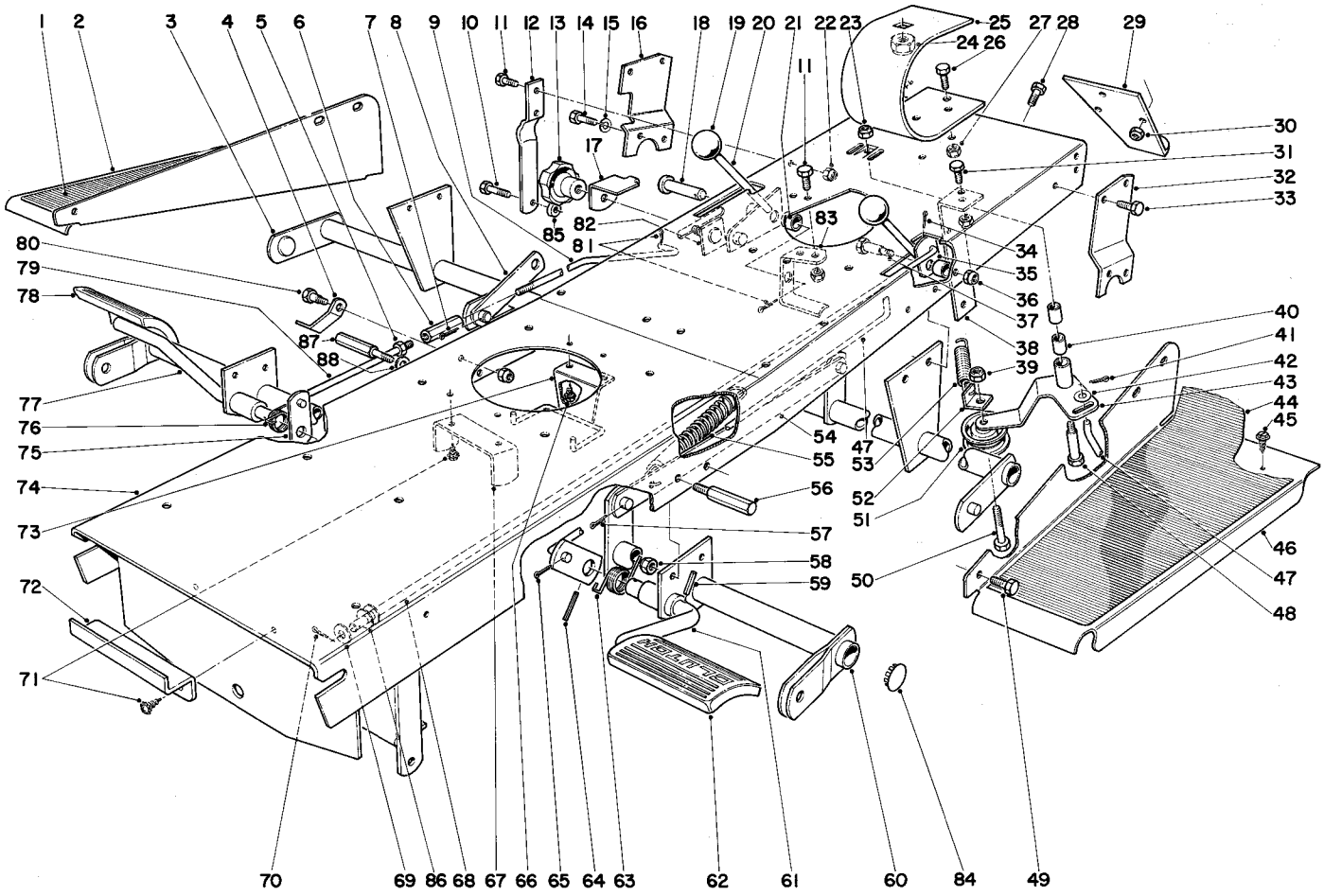

935 AND 935E CHASSIS ASSEMBLY

Ref. No.	Part No.	Description	No. Used
37	7-4071	Shoulder Bolt	1
38	7-4037	Support Transaxle	1
39	32152-2S	Nut	1
40	256-172S	Bushing	2
41	3272-6	Cotter Pin	1
42	3256-3	Washer	1
43	7-4043	Idler Arm Incl. Ref. #40	1
44	7-4130	Pad Left	1
45	32122-46S	Self Tapping Screw	4
46	7-4034	Foot Rest Left	1
47	7-4035	Clutch Rod	1
48	7-0731	Shoulder Bolt	1
49	322-2	Capscrew	6
50	323-8	Capscrew	1
51	7-0136	Idler Pulley	1
52	7-3976	Bracket Spring	1
53	7-4373	Tension Spring	1
54	7-4052	Lift Equalizer	1
55	7-4292	Counterbalance Tension Spring	1
56	7-3668	Pedal Stop	1
57	3272-7	Cotter Pin	2
58	32152-1S	Lock Nut	2
59	32121-45	Roll Pin	2
60	7-4005	Front Cross Tube	1
61	7-4055	Pedal Left	1
62	7-3901	Pad Clutch Pedal	1

Ref. No.	Part No.	Description	No. Used
63	7-4238	Pedal Return Spring	1
64	32121-51S	Roll Pin	2
65	3272-5	Cotter Pin	2
66	32140-58	Screw Self Tapping	2
67	7-4252	Cutter Guide	1
68	7-4196	Rod P.T.O. Control	1
69	3256-3	Washer	2
70	3272-6	Cotter Pin	1
71	32140-58	Self Tapping Screw	4
72	7-4384	Spring Clip	1
73	7-4680	Belt Traction Guide	1
74	7-4003	Frame	1
75	7-4191	Lever Pedal Shaft	2
76	7-4240	Pedal Return Spring	1
77	7-4053	Pedal Right	1
78	7-3900	Pad Brake Pedal	1
79	7-4192	Brake Rod Front	1
80	7-0163	Shoulder Bolt	1
81	3272-6	Cotter Pin	1
82	7-3667	Plate Knob	1
83	7-4036	Support Guide	1
84	2410-26	Plug Button	4
85	7-0698	Spacer	1
86	7-3315	Spacer	2
87	7-4590	Pedal Stop	1
88	7-0532	Washer	1

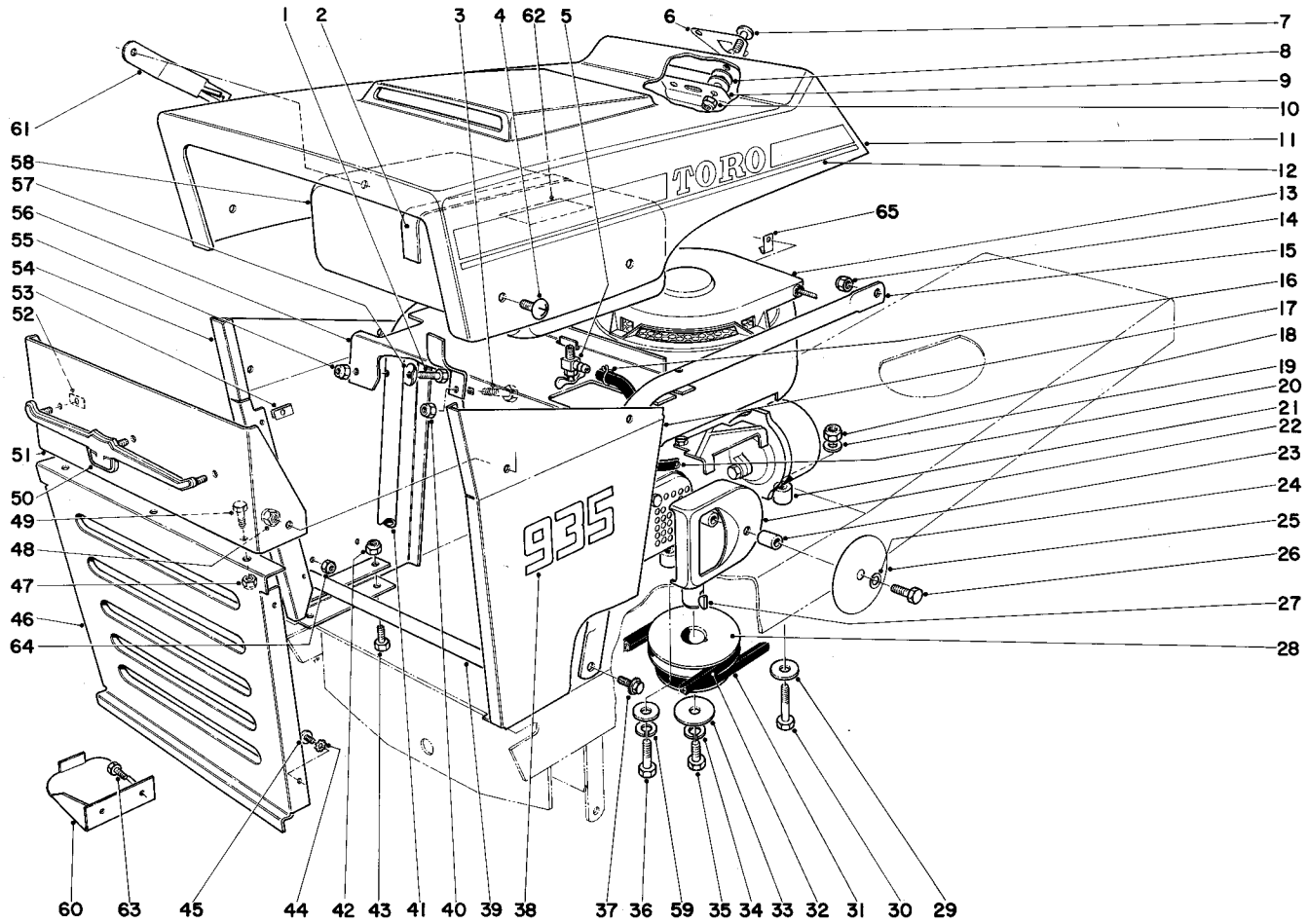

935 AND 935E HOOD AND ENGINE ASSEMBLY

Ref. No.	Part No.	Description	No. Used
1	321-8	Capscrew	4
2	7-3981	Strap Gas Tank	1
3	321-8	Capscrew	1
4	3258-158S	Truss Head Screw	4
5	304-88	Hose Connector	1
6	7-4387	Strap Hood	1
7	3258-160S	Screw	2
8	3256-16	Washer	4
9	7-3326	Hood Latch	1
10	32152-4S	Locknut	2
11	7-3302	Hood	1
12	7-3347	Decal Hood Left	1
*'	7-3346	Decal Hood Right	1
13	221-315	Engine 935	1
*	221-316	Engine 935E	1
14	32152-4S	Locknut	2
15	7-4146	Support Gas Tank Left	1
16	2412-6	Clamp	2
17	7-4105	Skin Left Front	1
18	32152-1S	Locknut	2
19	3256-2	Washer	2
20	7-3983	Gas Hose	1
21	7-4266	Spacer	4
22	7-4248	Baffle Muffler	1
23	7-4250	Spacer Muffler	2

Ref. No.	Part No.	Description	No. Used
24	3253-24	Lockwasher	1
25	7-4234	Shield Baffle	1
26	322-23	Capscrew	1
27	3257-3S	Woodruff Key	1
28	7-4140	Engine Pulley	1
29	3256-3	Washer	4
30	322-10	Capscrew	2
31	7-4232	V-Belt Traction	1
32	7-4231	V-Belt Power Take Off	1
33	3256-7	Washer	1
34	3253-21	Lockwasher	1
35	3211-5	Capscrew	2
36	322-7	Capscrew	2
37	32140-18	Sems Screw	2
38	7-4121	Decal 935	2
39	7-4106	Hinge	1
40	32152-4S	Locknut	1
41	7-4145	Support Gas Tank Right	1
42	32152-4S	Locknut	4
43	321-3	Capscrew	4
44	3255-17	Lockwasher	4
45	3290-111S	Screw	4
46	7-4103	Grille	1
47	32152-4S	Locknut	3
48	32152-1S	Locknut	4

* Not Illustrated

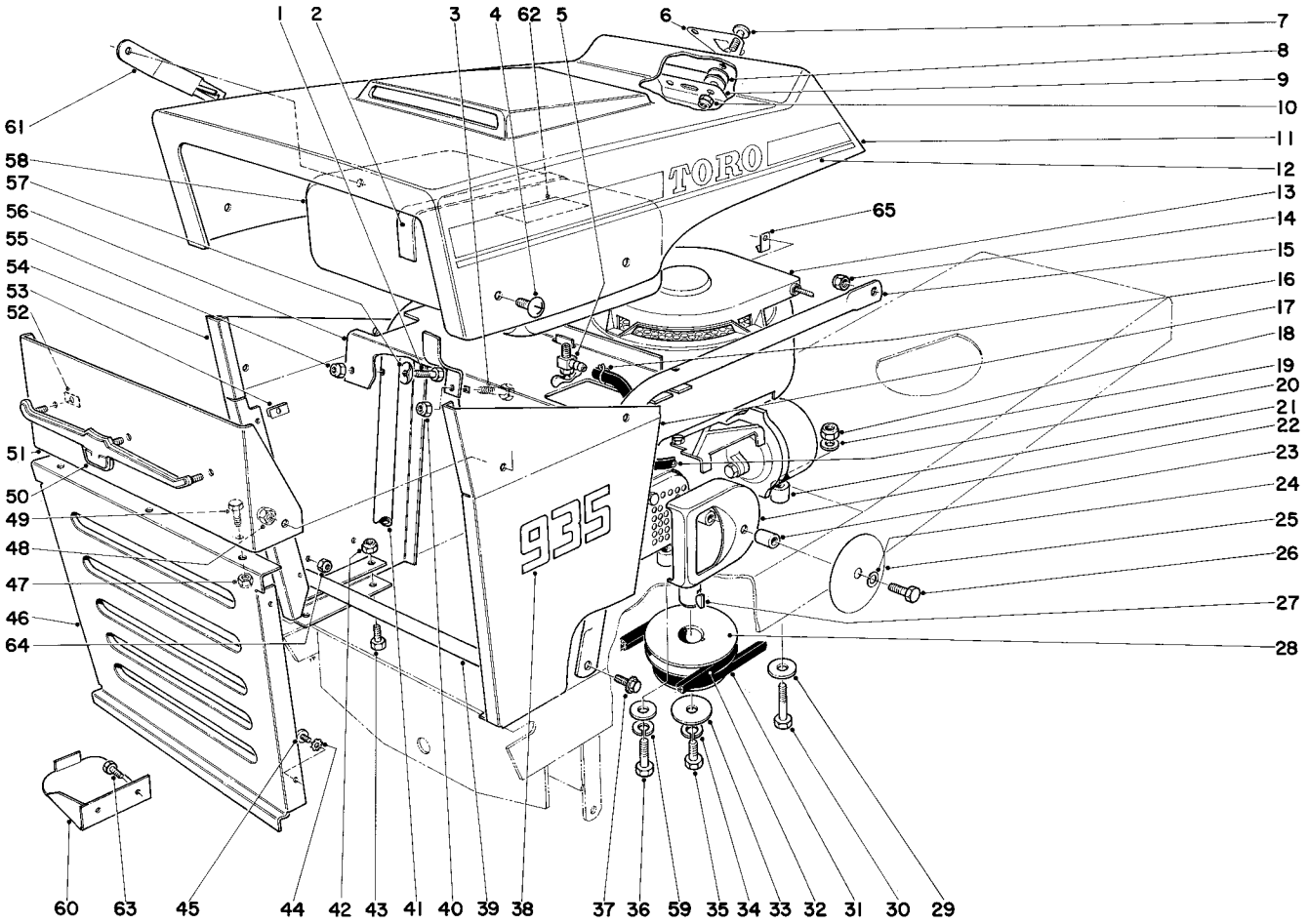

935 AND 935E HOOD AND ENGINE ASSEMBLY

Ref. No.	Part No.	Description	No. Used
49	321-3	Capscrew	3
50	7-3441	Bullshead Grille	1
51	7-3325	Blank Headlamp	1
52	3290-275S	Tinnerman Nut	3
53	3290-191	Tinnerman Nut	4
54	7-4580	Skin Right Front	1
55	32152-4S	Locknut	4
56	7-3904	Bracket Gas Tank	1
57	3-7501	Washer	2

Ref. No.	Part No.	Description	No. Used
58	7-3903	Gas Tank	1
59	3253-21	Lockwasher	2
60	7-4510	Trimmer Support	1
61	7-4500	Bracket Trimmer	1
62	7-4600	Decal, Gas Tank	1
63	321-2	Capscrew	2
64	32152-4	Locknut	2
65	7-0077	Clip (Right Hand Side Only)	1
*	222-16S	Gas Cap	1

* Not Illustrated

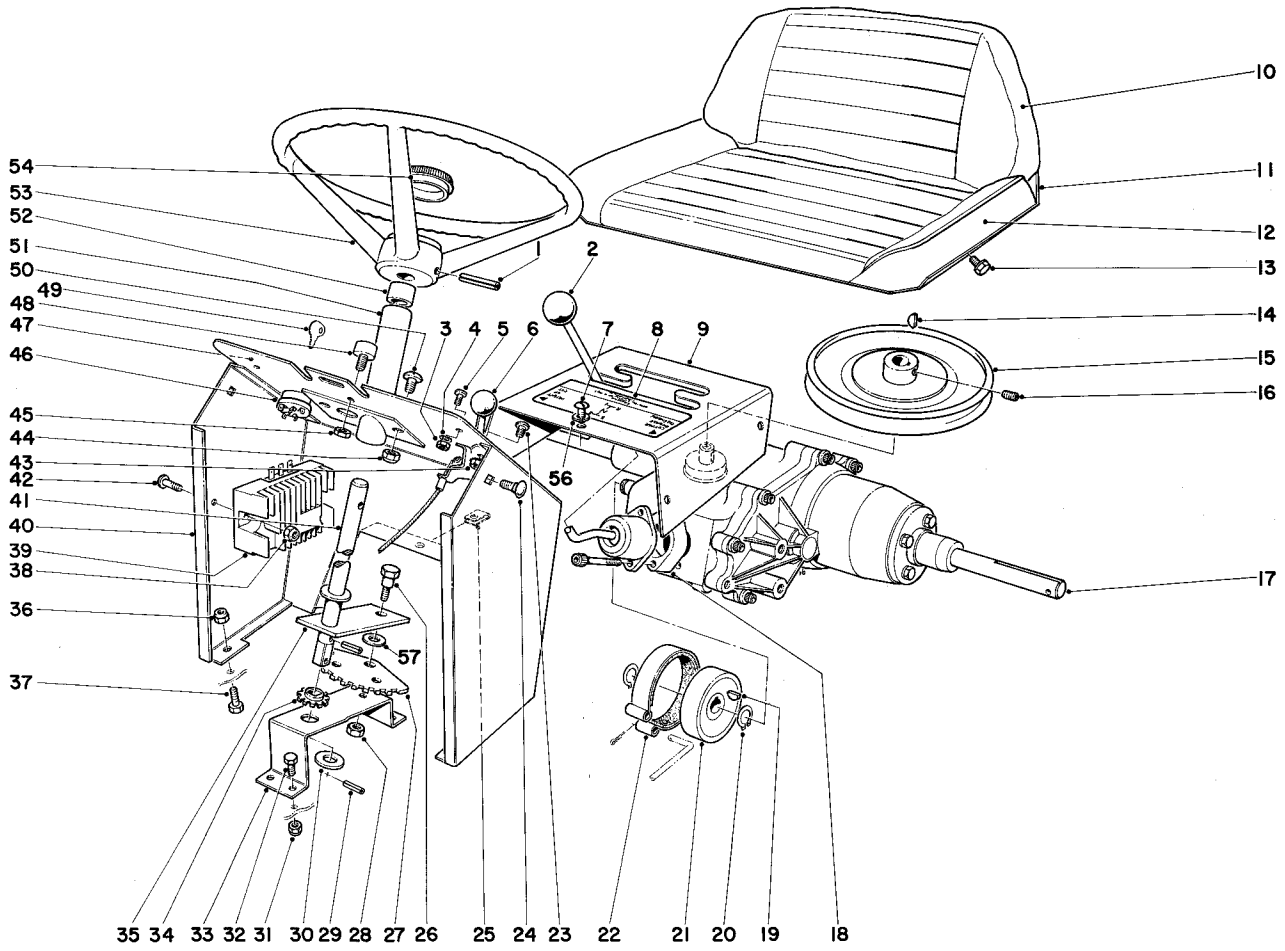

935 AND 935E DASH ASSEMBLY

Ref. No.	Part No.	Description	No. Used
1	32121-78S	Roll Pin	1
2	233-21S	Knob	1
3	3217-26	Nut	4
4	3255-17	Lockwasher	4
5	3290-111	Screw	4
6	7-4100	Throttle Control	1
7	3258-2	Screw Round Head	5
8	7-4123	Decal Shift Pattern	1
9	7-4030	Tunnel	1
10	7-3351	Cushion Back	1
11	7-3871	Frame Seat	1
12	7-3872	Cushion Seat	1
13	32140-16	Sems Screw	5
14	3257-32	Woodruff Key	1
15	7-4051	Pulley	1
16	3242-13S	Set Screw	2
17	7-4001	Transaxle	1
18	7-4264	Extension Shift Housing	1
19	3257-32	Woodruff Key	1
20	32120-64	Snap Ring	2
21	7-4218	Brake Drum	
22	7-4220	Brake Band Assembly	1
23	32122-43S	Round Head Machine Screw	2
24	3229-1	Carriage Bolt	2
25	3290-192	Tinnerman Clip	5

Ref. No.	Part No.	Description	No. Used
26	7-4152	Shoulder Bolt	1
27	7-4151	Gear Steering	1
28	32146-6	Nut	1
29	32121-34S	Roll Pin	2
30	7-4150	Pinion Washer	2
31	32152-1S	Locknut	4
32	322-3	Capscrew	4
33	7-4148	Bracket Mounting	1
34	7-4156	Pinion Steering	1
35	7-4153	Retainer Steering Gear	1
36	32152-1S	Locknut	2
37	322-3	Capscrew	2
38	32152-4S	Locknut 935E	2
39		Rectifier 935E	1
		See Page 12 Ref. No. 150	
40	7-4335	Dash Hood Support 935	1
*	7-4540	Dash Hood Support 935E	1
41	7-4155	Steering Shaft	1
42	3258-157S	Round Hd. Machine Screw 935E	2
43	32149-6	Keps Nut	2
44	32152-1S	Locknut	2
45	32152-4S	Locknut	1
46	7-4630	Switch Ignition 935E	1
47	7-4125	Decal Dash Panel 935	1
*	7-4126	Decal Dash Panel 935E	1

* Not Illustrated

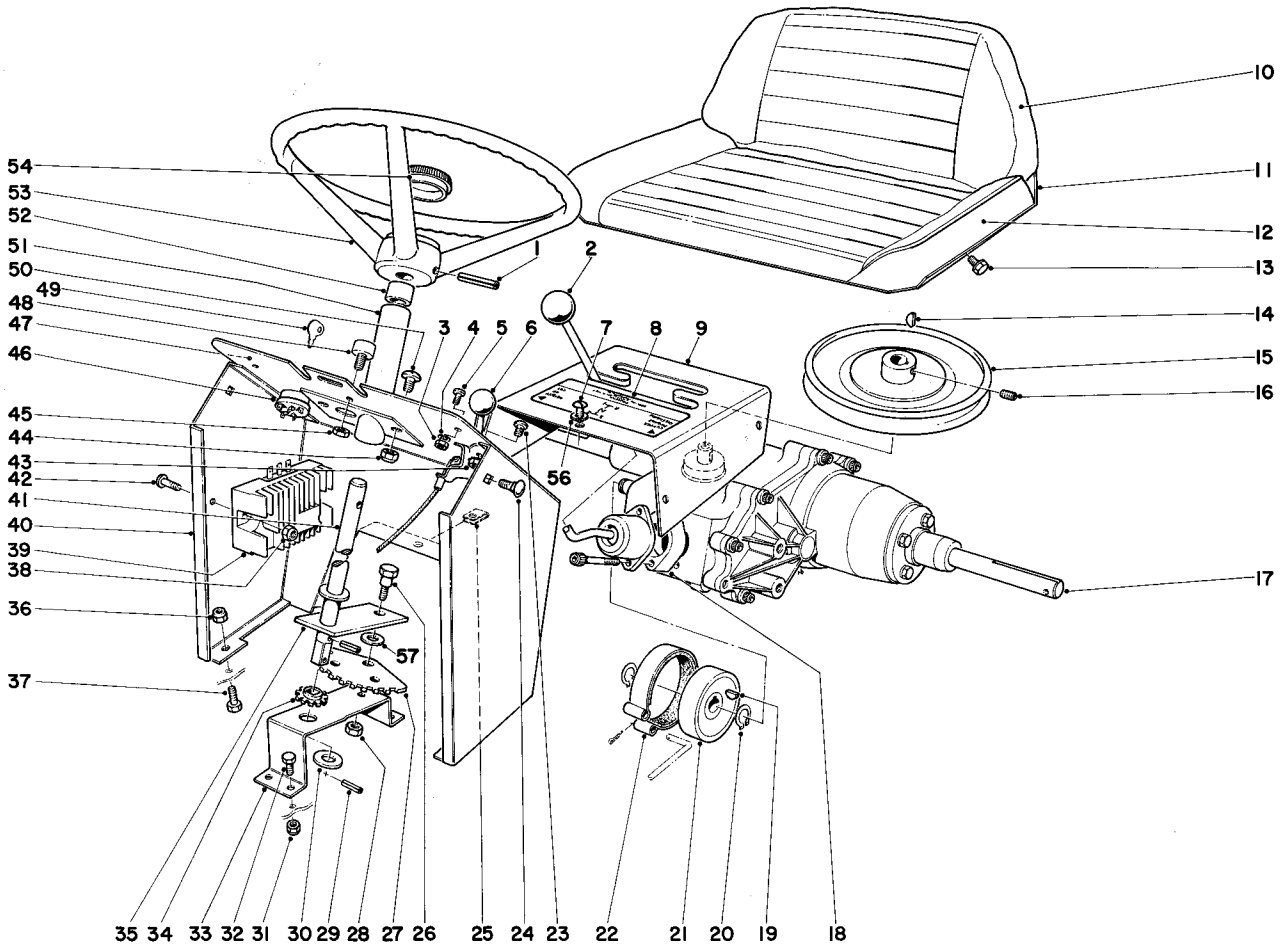

935 AND 935E DASH ASSEMBLY

Ref. No.	Part No.	Description	No. Used
48	7-4388	Stud	1
49	218-412	Ignition Key 935E	1
50	3258-158S	Cross Recess Hd. Screw	2
51	7-4002	Steering Tube Incl. Ref. #52	1
52	256-167S	Bushing	1

Ref. No.	Part No.	Description	No. Used
53	238-5S	Steering Wheel	1
54	7-4323	Steering Wheel Cap	1
56	3253-3	Lockwasher	5
57	7-4650	Washer	1

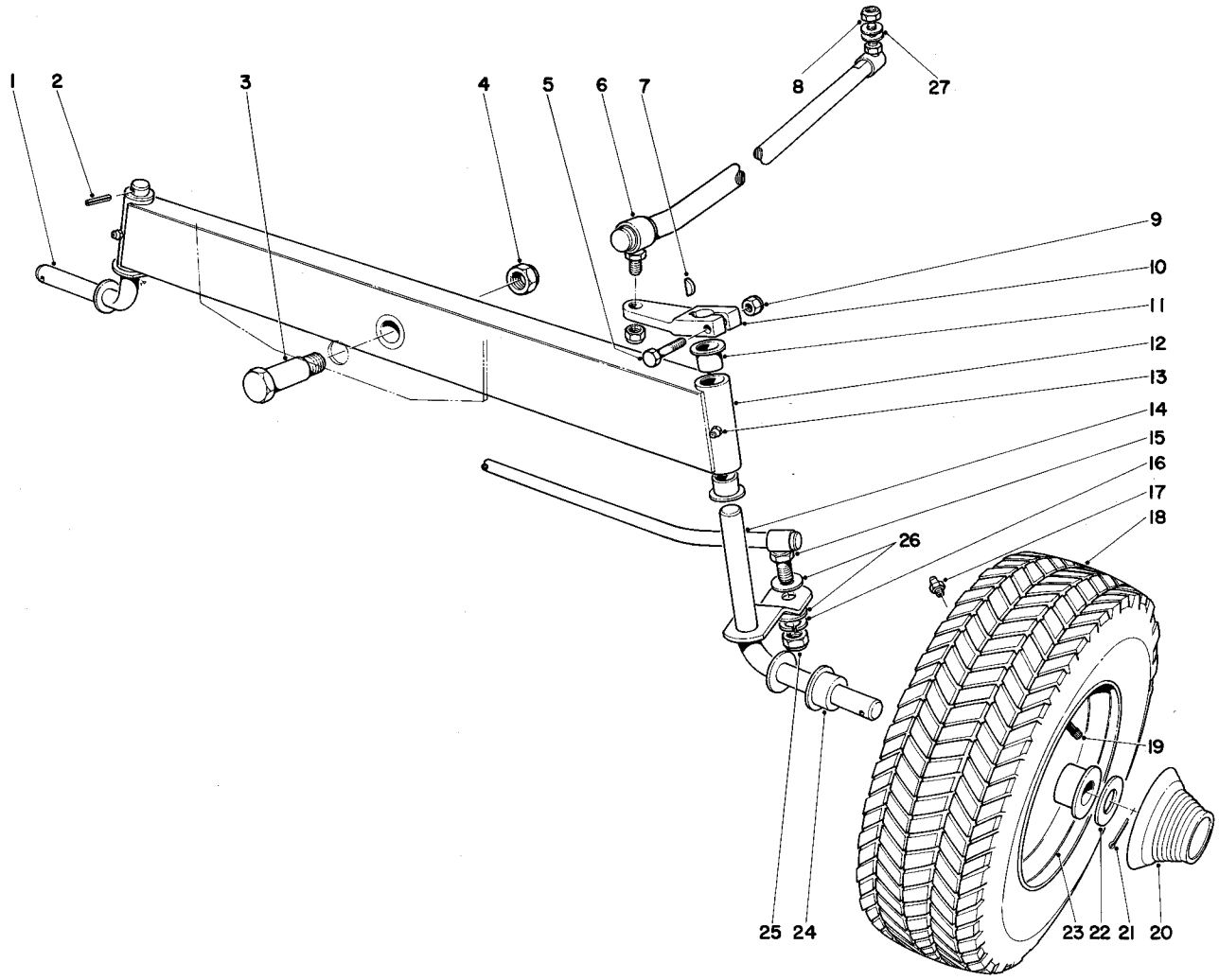

935 AND 935E FRONT AXLE ASSEMBLY

Ref. No.	Part No.	Description	No. Used
1	7-4061	Spindle R. H.	1
2	32121-24	Roll Pin	1
3	7-3884	Shoulder Bolt	1
4	32152-3S	Nut	1
5	321-9	Capscrew	1
6	7-4031	Drag Link	1
7	3257-3	Woodruff Key	1
8	32146-6	Lock Nut	2
9	32152-4S	Nut	1
10	7-4067	Arm Drag Link	1
11	256-136	Bushing	4
12	7-4057	Front Axle Incl. Ref. # 11	1
13	302-49S	Grease Fitting	2
14	7-4064	Spindle L. H.	1

Ref. No.	Part No.	Description	No. Used
15	7-4078	Tie Rod	1
16	3253-21	Lockwasher	2
17	302-5	Grease Fitting	2
18	231-49S	Tire	2
19	232-27S	Valve Stem	2
20	7-3932	Hub Cap Front	2
21	3272-22	Cotter Pin	2
22	7-0126	Washer	2
23	241-105S	Rim	2
24	256-175	Bushing	4
25	32146-6	Nut	2
26	3256-41	Washer	4
27	3256-24	Washer	2
	7-3360	Front Wheel Assem.	2

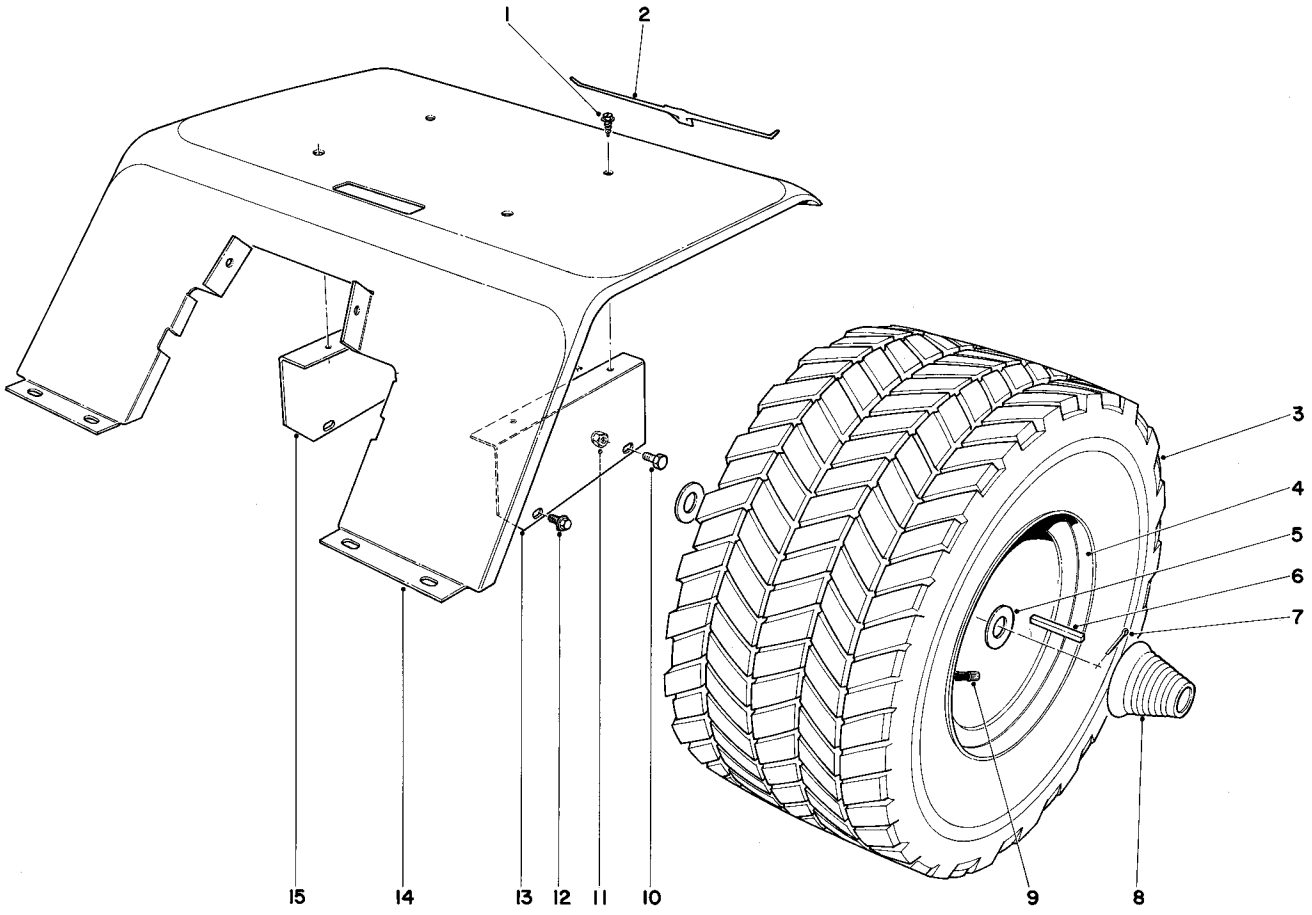

935 AND 935E REAR TIRE AND FENDER ASSEMBLY

Ref. No.	Part No.	Description	No. Used
1	32104-46	Self Tapping Screw	8
2	7-3908	Decal Rear Fender	1
3	231-57S	Tire	2
4	217-87S	Rim	2
5	7-4115	Washer	4
6	5-1865	Square Key	2
7	3272-22	Cotter Pin	2
8	7-4116	Hub Cap Rear	2

Ref. No.	Part No.	Description	No. Used
9	232-21	Valve Stem	2
10	322-3	Capscrew	2
11	32152-1S	Lock Nut	2
12	32140-18	Self Tapping Screw	2
13	7-4120	Fender Support L. H.	1
14	7-4383	Fender	1
15	7-4118	Fender Support R. H.	1
	7-4028	Rear Wheel Assem.	2

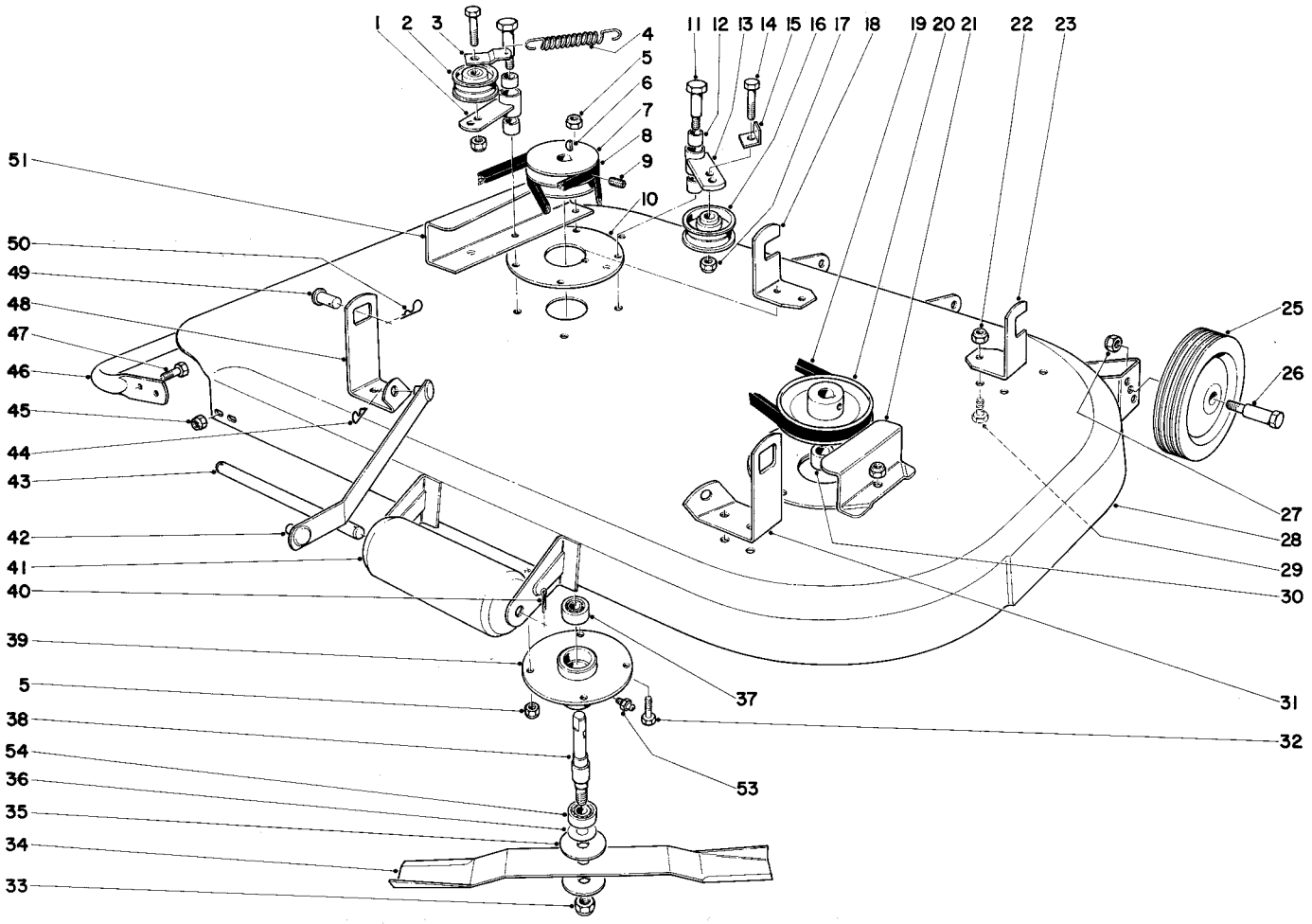

36" MOWER ASSEMBLY

Ref. No.	Part No.	Description	No. Used
1	7-3780	Idler Plate Incl. Ref. # 12	1
2	7-4660	Pulley Idler	1
3	7-4382	Bracket Spring	1
4	7-3977	Spring Tension	1
5	32152-1S	Nut	8
6	3257-5	Key	1
7	7-3788	Pulley	1
8	7-4230	Belt	1
9	3246-2	Set Screw	2
10	7-0252	Washer	2
11	7-3878	Bolt Shoulder	2
12	256-172S	Bushing	4
13	7-3781	Idler Plate Incl. Ref. # 12	1
14	323-8	Capscrew	2
15	7-3976	Clip	1
16	7-0136	Pulley Idler	1
17	32152-2S	Nut	2
18	7-4210	Bracket	1
19	7-4228	Belt	1
20	7-3796	Pulley	1
21	7-4212	Belt Guard	1
22	32152-1S	Nut	8
23	7-4208	Bracket Mower L. H.	1
25	241-87S	Wheel	2
26	7-0262	Axle Bolt	2
27	32152-2S	Nut	2
28	7-4201	Housing	1

Ref. No.	Part No.	Description	No. Used
29	322-2	Capscrew	8
30	7-3747	Spacer Blade Spindle	1
31	7-4206	Bracket Mower Front Left	1
32	322-4	Capscrew	6
33	32152-6S	Nut	2
34	7-2464	Blade	2
35	7-0253	Washer	4
36	7-3590	Washer	2
37	251-5	Bearing	2
38	7-4205	Spindle – Blade	2
39	7-4204	Mower Spindle Housing	2
40	3272-7	Cotter Pin	4
41	7-0276	Roller	2
42	7-4111	Tow Bar	2
43	7-0277	Shaft Roller	2
44	3290-250	Hair Pin Cotter	4
45	32152-4S	Nut	4
46	7-4211	Guard Mower Housing	1
47	3229-10	Carriage Bolt	4
48	7-4207	Bracket Mower Front Right	1
49	7-4110	Clevis Pin	2
50	3290-250	Hair Pin Cotter	2
51	7-4317	Guard Mower Housing	1
53	302-5	Grease Fitting	2
54	251-123	Bearing	2
	7-4200	Cutting Attachment, Complete	1

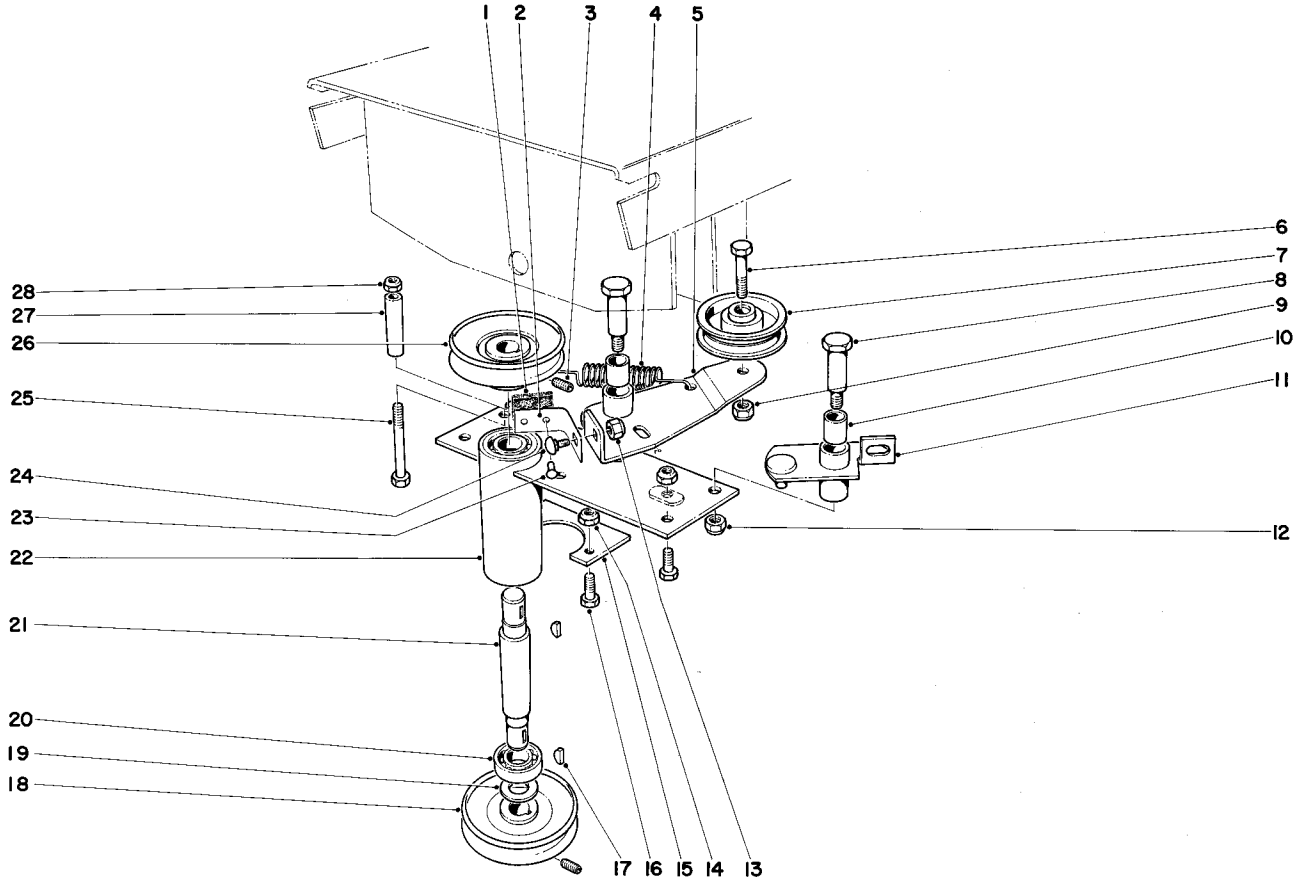

935 AND 935E POWER TAKEOFF ASSEMBLY

Ref. No.	Part No.	Description	No. Used
1	7-0643	Brake Lining	1
2	7-4093	Brake Spring	1
3	3246-1	Set Screw	4
4	7-3970	Spring Tension	1
5	7-4190	Idler Plate Incl. Ref #10	1
6	323-8	Capscrew	1
7	7-0136	Idler Pulley	1
8	7-0731	Shoulder Bolt	1
9	32152-2S	Locknut	1
10	256-172S	Bushing	4
11	7-4094	Pivot Bracket Incl. Ref. #10	1
12	32152-2S	Locknut	1
13	32152-2S	Locknut	1
14	32152-1S	Locknut	4

Ref. No.	Part No.	Description	No. Used
15	7-4086	Retainer Power Take Off Tube	1
16	322-2	Capscrew	5
17	3257-5	Key	2
18	7-4096	Pulley	1
19	7- 0777	Washer - Bearing	1
20	251-5	Bearing	2
21	7-4095	Shaft Power Take Off	1
22	7-4088	Power Take Off Tube	1
23	3290-287S	Pop Rivet	2
24	3231-21	Carriage Bolt	1
25	322-12	Capscrew	1
26	7-3796	Pulley	1
27	7-4097	Spacer	1
28	32152-1S	Nut	1
	7-4092	Brake Assembly Incl. Ref. 1, 2 and 23	1

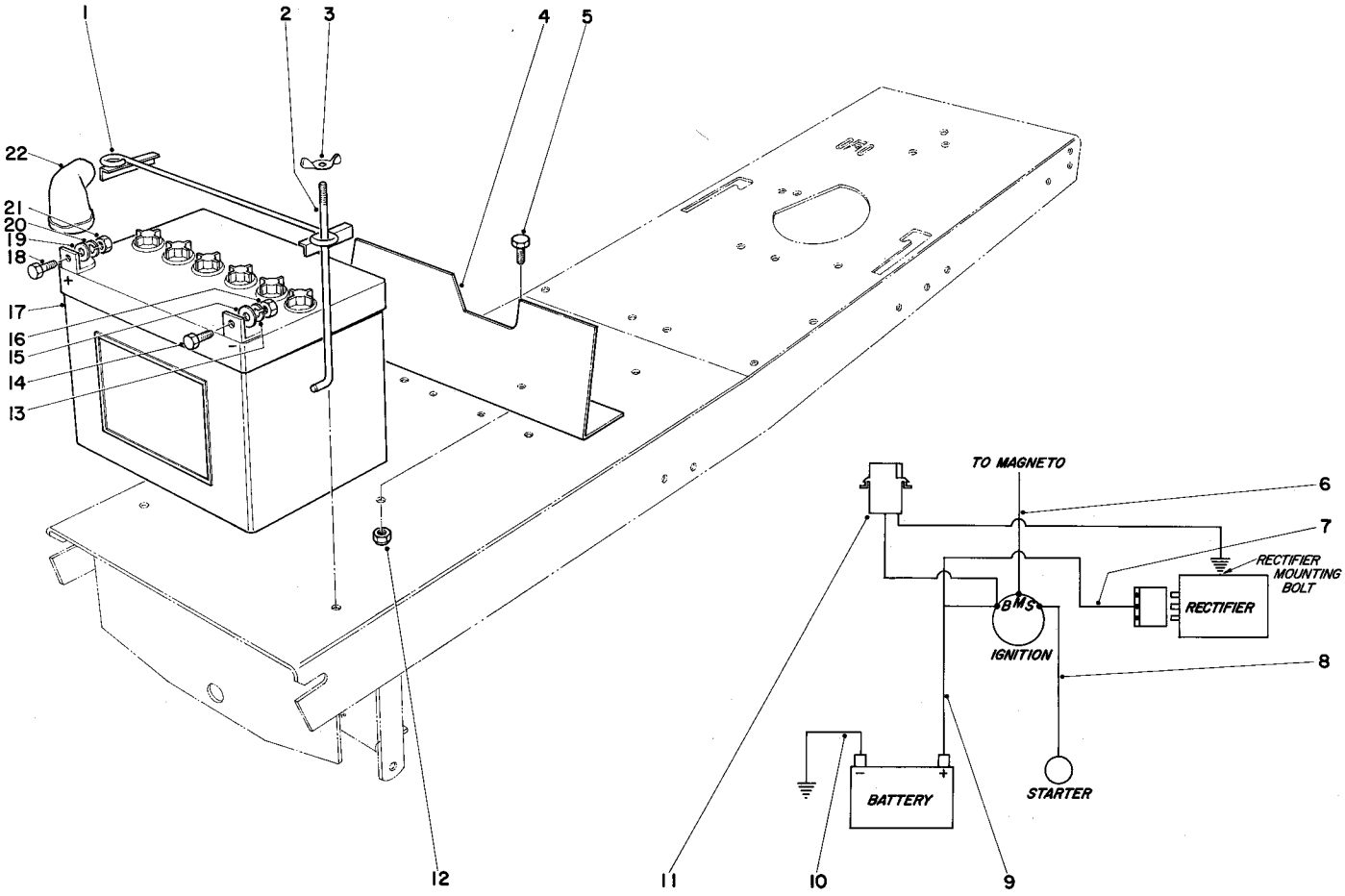

935E ELECTRICAL ASSEMBLY

Ref. No.	Part No.	Description	No. Used
1	7-0534	Battery Clamp	1
2	7-3328	Bolt Battery	2
3	32103-12	Wing Nut	2
4	7-4328	Shield Heat	1
5	322-2	Capscrew	2
6	7-4282	Wire Assy. Switch To Magneto	1
†7		Wire Assy. Switch to Rectifier	1
8	7-4081	Wire Assy. Switch to Starter	1
9	7-4255	Wire Assy. Switch to Battery	1
10	7-4080	Wire Assy. Battery to Ground	1
11	7-4490	Wire Assy.	1

Ref. No.	Part No.	Description	No. Used
12	32152-1S	Locknut	2
13	3253-3	Lockwasher	1
14	321-4	Capscrew	1
15	3256-2	Flat Washer	1
16	3217-5	Nut	1
17	239-13S	Battery 12 Volt	1
18	322-3	Capscrew	1
19	7-0024	Flat Washer	1
20	3253-4	Lockwasher	1
21	3217-6	Nut	1
22	218-331S	Terminal Boot	2

† See your local Tecumseh Dealer

935 AND 935E ENGINE ASSEMBLY

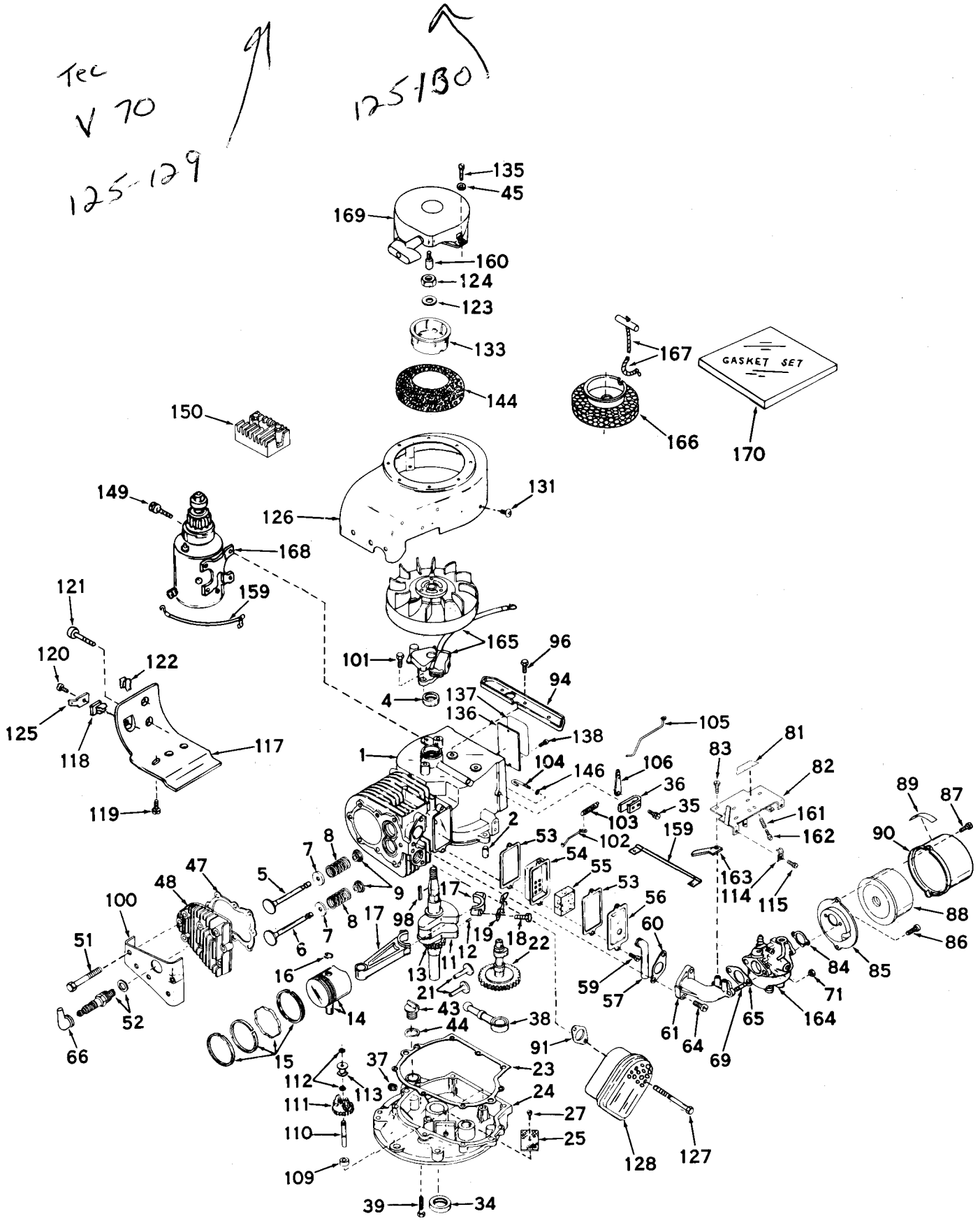

935 AND 935E ENGINE PARTS LIST

Ref. No.	Part No.	Description	No. Used
1	32640	Cylinder Assy. (Incl. Nos. 2 & 4)	1
2	27652	Pin, Dowel	2
4	*32630	Seal, Oil	1
5	32783	Valve, Intake (Standard) (Incl. No. 9)	1
5	32784	Valve, Intake (1/32" oversize) (Incl. No. 9)	1
6	27878A	Valve, Exhaust (Standard) (Incl. No. 9)	1
6	27880A	Valve, Exhaust (1/32" oversize) (Incl. No. 9)	1
7	27882	Cap, Upper Valve Spring	2
8	27881	Spring, Valve	2
9	32581	Cap, Lower Valve Spring	2
11	32638	Crankshaft Assy. (Incl. Nos. 12 & 13) (Model 935 only)	1
11	32910	Crankshaft Assy. (Incl. Nos. 12 & 13) (Model 935E only)	1
12	29783	Pin, Crankshaft Gear	1
13	27884	Gear, Crankshaft	1
14	32592	Piston & Pin Assy. (Incl. 2 of No. 16) (Standard)	1
14	32593	Piston & Pin Assy. (Incl. 2 of No. 16) (.010 oversize)	1
14	32594	Piston & Pin Assy. (Incl. 2 of No. 16) (.020 oversize)	1
15	32595	Ring Set, Piston (Standard)	1
15	32596	Ring Set, Piston (.010 oversize)	1
15	32597	Ring Set, Piston (.020 oversize)	1
16	27888	Ring, Piston Pin Retaining	2
17	32591	Rod Assy., Connecting (Incl. Nos. 18 & 19)	1
18	650662	Screw, Connection Rod	2
19	32590	Plate, Lock	1
21	27893	Lifter, Valve	2
22	32114	Camshaft	1
23	*30684	Gasket, Mounting Flange	1
24	31471A	Flange Assy., Mounting (Incl. Nos. 25, 27, 34, 37, 43, 44 & 110)	1
25	31355	Screen, Oil Filter	1
27	29117	Screw, Slotted hex hd. Self tap	1
34	*27897	Seal, Oil	1
35	650548	Screw, Hex washer head	1
36	31335	Clamp, Governor Lever	1
37	27642	Plug, Oil drain Sq. Hd.	1
38	31356	Pump Assy., Oil	1
39	650488	Screw, Hex hd. cap. Sems,	7
43	27625	Plug, Oil filler	1
44	*29673	Gasket, Filler plug	1
45	650168	Flatwasher (Model 935 only)	4
47	*32631	Gasket, Cylinder Head	1
48	30938A	Head, Cylinder	1
51	28261	Screw, Hex hd. cap,	8
52	21943	Plug, Spark (Champion J-8 or equivalent)	1
53	*27896	Gasket, Valve Chamber cover	2
54	28423	Body Assy., Breather	1
55	28424	Element, Breather	1
56	28425	Cover, Valve Chamber	1
57	27627	Tube, Breather	1
59	650128	Screw, Phil. fil. hd. Sems,	2
60	*27915	Gasket, Intake pipe	1

Ref. No.	Part No.	Description	No. Used
61	32632	Pipe, Intake	1
64	650378	Screw, Fil. hd. Sems,	2
65	*26756	Gasket, Carburetor	1
66	27276	Cover, Spark plug	1
69	32633	Stud	2
71	29752	Nut, Hex, Lock	2
81	31495	Decal, Speed control (Model 935 only)	1
81	31514	Decal, Speed control (Model 935E only)	1
82	31736	Control Assy., Speed	1
83	30200	Screw, Hex Washer Hd.	2
84	*27272	Gasket, Air Cleaner	1
85	31691	Bracket, Air Cleaner	1
86	28820	Screw, Fil. Hd. Sems,	2
87	650152	Screw, Fil. Hd. Sems	2
88	30727	Element, Air Cleaner	1
89	31752	Decal, Air Cleaner	1
90	31692	Body, Air Cleaner	1
91	*27930	Gasket, Exhaust	1
94	28738	Bracket, Blower Housing (Incl. Nos. 131)	1
96	650561	Screw, Hex hd. cap, Sems	2
98	32589	Key, Flywheel	1
100	30939	Cover, Cylinder Head	1
101	650489	Screw, Hex Hd. cap, Sems (Model 935 only)	2
101	650516	Screw, Hex Hd. cap, Sems (Model 935E only)	2
102	32582	Link, Governor Spring	1
103	31361	Spring, Governor	1
104	30669	Rod, Governor (Incl. Nos. 146)	1
105	31823	Link, Throttle	1
106	31357	Lever, Governor	1
109	31707	Spacer	1
110	30668	Shaft, Mechanical Governor	1
111	30591	Gear Assy., Governor	1
112	29193	Ring, Retaining	2
113	30588A	Spool, Governor	1
114	27793	Clip, Conduit	1
115	28942	Screw, Hex hd. Sems	1
117	30622	Extension, Blower Housing	1
118	28545	Grommet (Model 935E only)	1
119	650128	Screw, Fil. Hd. Sems,	1
120	650643	Screw, Rd. Hd. (Model 935E only)	1
121	30688	Screw, Hex hd. Sems	1
122	27275	Clip, Hi-tension wire Retaining	2
123	650490	Washer, Belleville	1
124	8116	Nut, Hex	1
125	30843	Terminal (Model 935E only)	1
126	31472	Housing, Blower (Model 935 only)	1
126	32296	Housing, Blower (Model 935E only)	1
127	27931	Screw	2
128	28269	Muffler Assembly	1
131	29747A	Screw, Fil. hd. mach., Sems	2
133	32125	Cup, Starter (Model 935 only)	1
135	30513	Screw, Hex hd. Sems, (Model 935 only)	4
136	31345	Plate, Identification	1

935 AND 935E ENGINE PARTS LIST

Ref. No.	Part No.	Description	No. Used
137	31865	Decal, Name & Instruction	1
138	28670	Screw, Drive	2
144	590417	Screen, Starter cup (Model 935 only)	1
146	28277	Washer, Flat	1
149	30063	Screw, Fil. hd. Sems (Model 935E only)	4
150	610749	Regulator, Rectifier (Model 935E only)	1
159	28468	Wire, Ground (Model 935 only)	1
159	30831	Wire, Ground (Model 935E only)	1
160	590459	Roll Pin & Extension Tube (Model 935 only)	1
161	31342	Spring, Compression	1
162	650549	Screw, Fil. hd. mach.,	1
163	32704	Clip (Model 935E)	1
164	631447	Carburetor	1

Ref. No.	Part No.	Description	No. Used
165	610689A	Magneto, (Model 935 only)	1
165	610766	Magneto, Alternator (Model 935E only)	1
166	28301	Hub & Screen, Rope Starter (Model 935E only)	1
167	590343	Rope & Handle, Starter (Model 935E only)	1
168	**29965	Motor, Starter (Model 935E only)	1
168	**32468	Motor, Starter (Model 935E only)	1
168	**32468A	Motor, Starter (Model 935E only)	1
169	590420	Starter, Rewind (Model 935 only)	1
170	32658	Gasket Set (Incl. items marked *)	1

**The 29965, 32468, and 32468A starter motors used interchangeably. Refer to service number stamped on end cap of motor for identification.

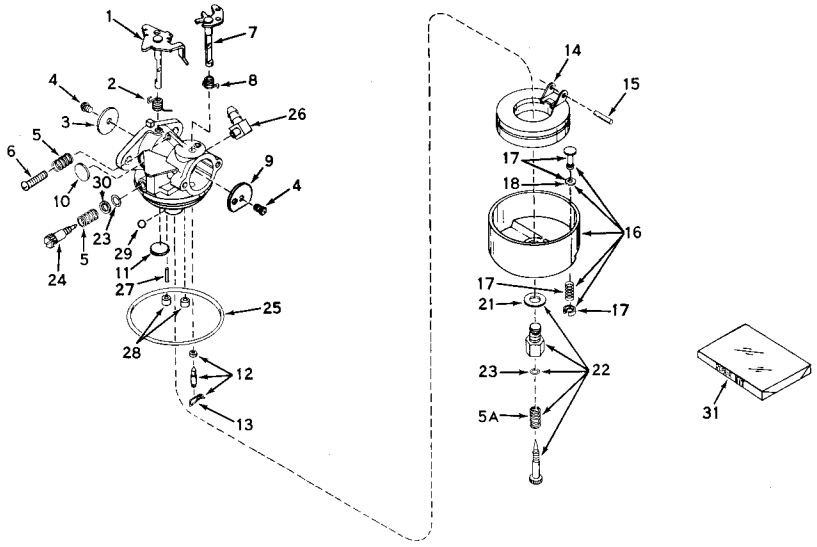

CARBURETOR NO. 631447 ASSEMBLY

Ref. No.	Part No.	Description	No. Used
1	31834	Shaft & Lever Assy., Throttle	1
2	630731	Spring, Throttle Return	1
3	631036	Shutter, Throttle	1
4	650506	Screw, Rd. Hd.	2
5	630766	Spring, Idle Regulating Screw	2
5A	630738	Spring, Main Adjustment Screw	1
6	650417	Screw, Idle Regulating	1
7	630973	Shaft & Lever Assy., Choke	1
8	630821	Spring, Choke Return	1
9	631037	Shutter, Choke	1
10	630748	Plug, Welch	1
11	631027	Plug, Welch	1
12	*631021	Inlet Needle, Seat & Clip Assy. (Incl. No. 13)	1
13	631022	Clip, Inlet Needle	1
14	631023	Float, Carburetor	1
15	*631024	Shaft, Float	1

Ref. No.	Part No.	Description	No. Used
16	631025	Bowl & Drain Assy., Float (Incl. No. 17)	1
17	27136A	Plunger Assy., Drain (Incl. No. 18)	1
18	27554	Gasket, Drain Plunger	1
21	27110	Gasket, Bowl-To-Body	1
22	*631026	Adjustment Screw Assy., Main (Incl. Nos. 5A, 21 & 23)	1
23	*630740	"O" Ring, Adjustment Screw	2
24	*631078	Screw, Idle Adjustment	1
25	*631028	"O" Ring, Bowl-To-Body	1
26	631038	Fitting, Fuel Inlet	1
27	631039	Pin	1
28	630747	Plug, Cup	2
29	631081	Ball, Aluminum	1
30	630739	Washer, Flat	1
31	631029	Repair Kit (Incl. items marked *)	1

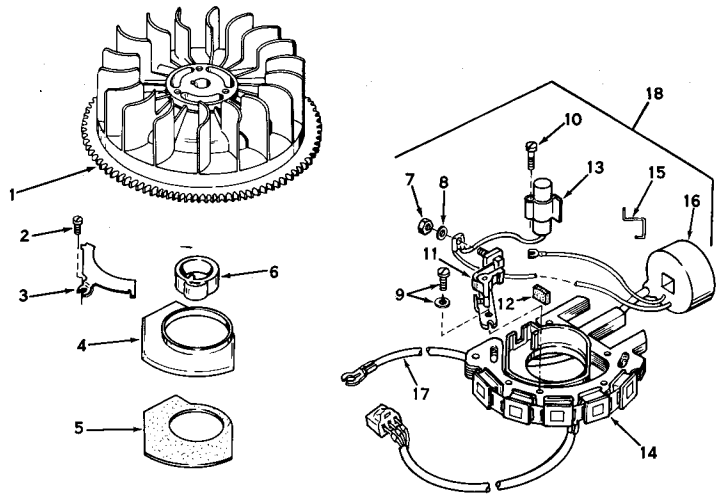

MAGNETO NO. 610766 ASSEMBLY 935E

Ref. No.	Part No.	Description	No. Used
1	32333	Flywheel	1
2	610762	Screw, Dust Cover	1
3	32435	Clamp, Dust Cover	1
4	32365	Cover, Dust	1
5	32366	Gasket, Dust Cover	1
6	32334	Cam, Breaker	1
7	610408	Nut, Terminal	1
8	610385	Washer, Terminal	1
9	29181	Screw & Lockwasher	1
10	610593	Screw, Condenser Fastening	1

Ref. No.	Part No.	Description	No. Used
11	32434	Contact Assy., Breaker	1
12	30549	Felt, Cam Wiper	1
13	610767	Condenser	1
14	610764	Stator Core & Generating Coils	1
15	31311	Clip, Coil	1
16	610768	Coil	1
17	30554	Wire, Lead	1
18	610765	Stator Plate Assy. (Incl. Nos. 2 thru 5 & 7 thru 17)	1

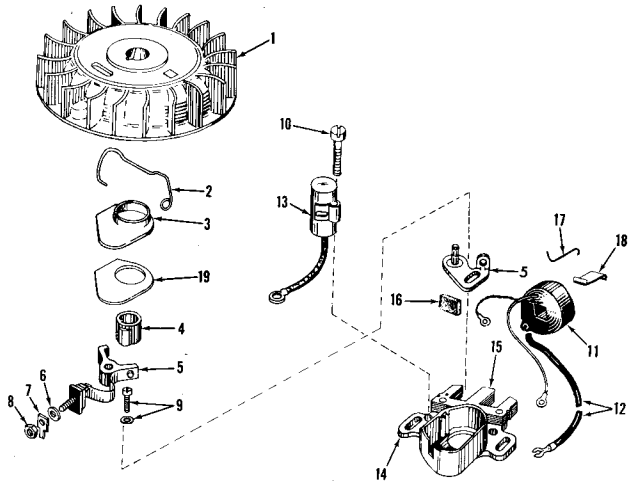

MAGNETO NO. 610689A ASSEMBLY 935

Ref. No.	Part No.	Description	No. Used
1	30555	Flywheel	1
2	30551	Spring, Breaker Box	1
3	30550	Cover, Breaker Box Dust	1
4	30992	Cam Breaker (Not used on all engines)	1
5	30547A	Contact Assy., Breaker	1
6	610385	Washer, Terminal	1
7	30843	Tab, Ground Terminal	1
8	610408	Nut, Terminal	1
9	29181	Screw & Washer, Breaker	1
10	610593	Screw, Condenser Fastening	1

Ref. No.	Part No.	Description	No. Used
11	30560	Coil Assy., (Inc. Ref. Nos. 12, 13 & 18)	1
12	30554	Wire, Lead	1
13	30548A	Condenser	1
14	30545	Core & Plate	1
15	30561A	Stator Assy., (Incl. Nos. 2, 3, 5 thru 14 & 16 thru 19)	1
16	30549	Felt, Cam Wiper	1
17	31311	Clip, Coil Locking	1
18	29629	Spring, Coil Wedge	1
19	30883	Gasket, Dust Cover	1

TRANSAXLE MODEL NO. 615 ASSEMBLY

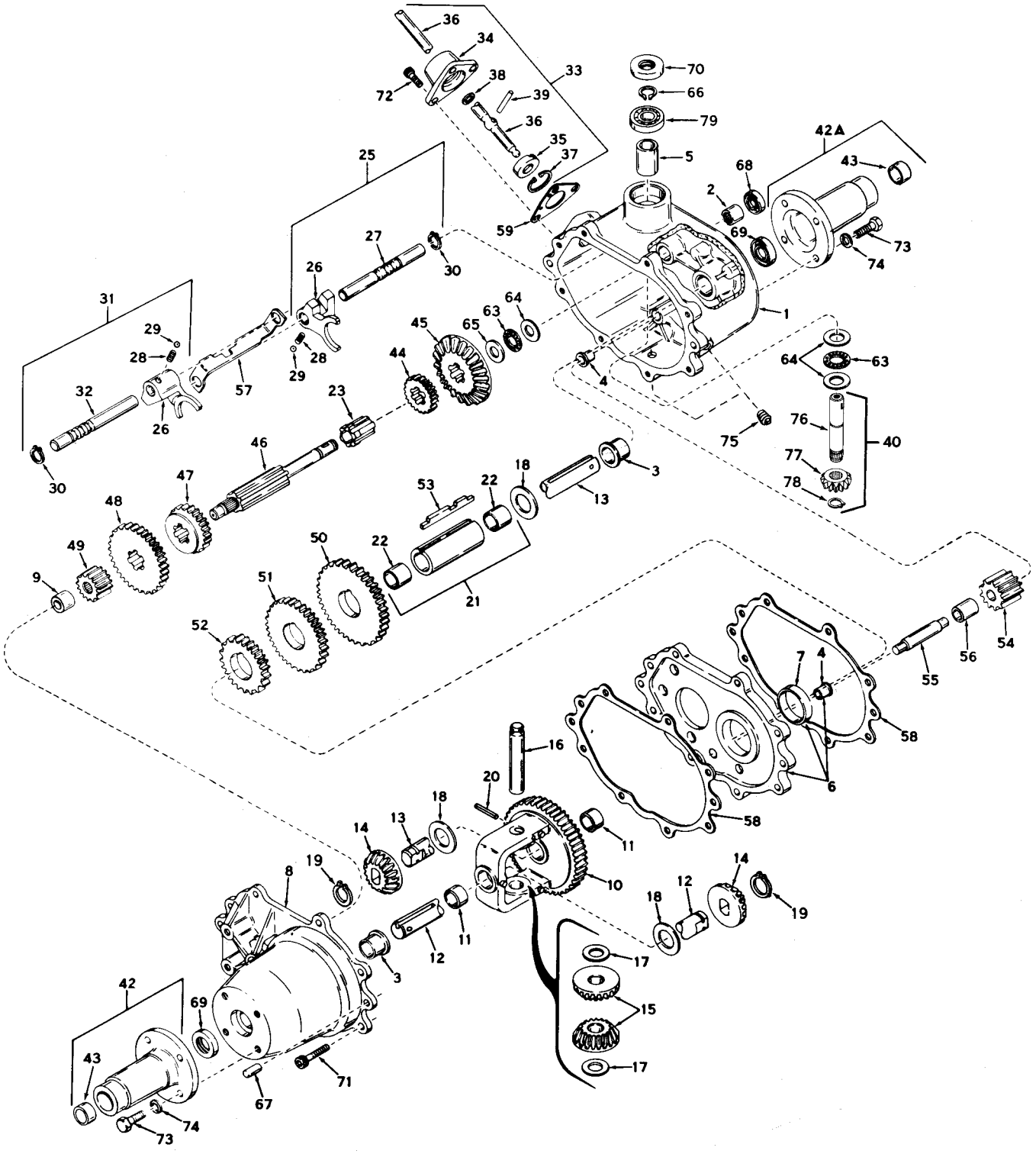

TRANSAXLE MODEL NO. 615 PARTS LIST

Ref. No.	Part No.	Description	No. Used
1	770051	Case Assy., Transaxle (Incl. Nos. 2 thru 5)	1
2	780086	Bearing, Needle	1
3	780059	Bearing, Bronze	1
4	780060	Bearing, Bronze	1
5	780061	Bearing, Bronze	
6	786033	Plate Assy., Center (Incl. Nos. 4 & 7)	1 1
7	780062	Bearing, Bronze	1
8	772042	Cover Assy., Transaxle (Incl. Nos. 3 & 9)	1
9	780063	Bearing, Needle	1
10	778053	Gear Assy., Differential (Incl. No. 11)	1
11	780064	Bearing, Bronze	1
12	774151	Axle, Left Hand	1
13	774152	Axle, Right Hand	1
14	778067	Gear, Bevel	1
15	778068	Pinion, Bevel	1
16	786034	Pin, Drive	1
17	780065	Washer, Thrust	1
18	780001	Washer, Thrust	1
19	788038	Ring, Snap	1
20	792040	Pin, Roll	1
21	786035	Sleeve Assy., Countershaft (Incl. No. 22)	1
22	780066	Bearing, Bronze	1
23	776090	Shaft, Idler	1
25	784079	Rod Assy., Shift (1st & Rev.) (Incl. Nos. 26 thru 30)	1
26	784004	Fork, Shift	1
27	784083	Rod, Shift	1
28	792003	Spring	1
29	792004	Ball, Steel	1
30	792017	Ring, Snap	1
31	784084	Rod Assy., Shift (2nd & 3rd) (Incl. Nos. 26, 28, 29, 30 & 32)	1
32	784085	Rod, Shift	1
33	784161	Lever & Housing Assy., Shift (Incl. Nos. 34 thru 39)	1
34	784088	Housing, Shift Lever	1
35	784094	Keeper, Shift Lever	1
36	784162	Lever, Shift	1

Ref. No.	Part No.	Description	No. Used
37	792016	Ring, Snap	1
38	792001	Ring, Quad	1
39	792002	Pin, Roll	1
40	776102	Shaft & Gear Assy., Input (Incl. Nos. 76, 77 & 78)	1
42	782036	Housing Assy., Axle (Incl. No. 43)	1
42A	782038	Housing Assy., Axle (Incl. No. 43)	1
43	780091	Bearing, Needle	1
44	778024	Gear (16 teeth)	1
45	778057	Gear, Bevel (33 teeth)	1
46	776089	Shaft, Shifter & Brake	1
47	778058	Gear, Shifting (2nd & 3rd)	1
48	778059	Gear, Shifting (1st & Rev.)	1
49	778060	Gear, Spur (12 teeth)	1
50	778061	Gear, Countershaft Drive (39 teeth)	1
51	778062	Gear, Countershaft (34 teeth)	1
52	778063	Gear, Countershaft (25 teeth)	1
53	792034A	Key, Countershaft	1
54	778064	Idler, Reverse	1
55	776057	Shaft, Reverse Idler	1
56	786036	Spacer, Reverse Idler	1
57	784087	Stop, Shifter	1
58	788033	Gasket, Case & Cover	1
59	788003	Gasket, Shift Lever Housing	1
63	780071	Bearing, Thrust	1
64	780072	Washer, Thrust	1
65	780073	Washer, Thrust	1
66	792035	Ring, Snap	1
67	786026	Pin, Dowel	1
68	788043	Seal, Oil	1
69	788009	Seal, Oil	1
70	788035	Seal, Oil	1
71	792036	Screw, Socket Hd. Cap	1
72	792051	Screw, Socket Hd. Cap	1
73	792037	Screw, Hex Hd.	1
74	792029	Lockwasher	1
75	792039	Plug, Pipe	1
76	776103	Shaft, Input	1
77	778077	Pinion, Input	1
78	788040	Ring, Retaining	1
79	780093	Bearing, Ball	1

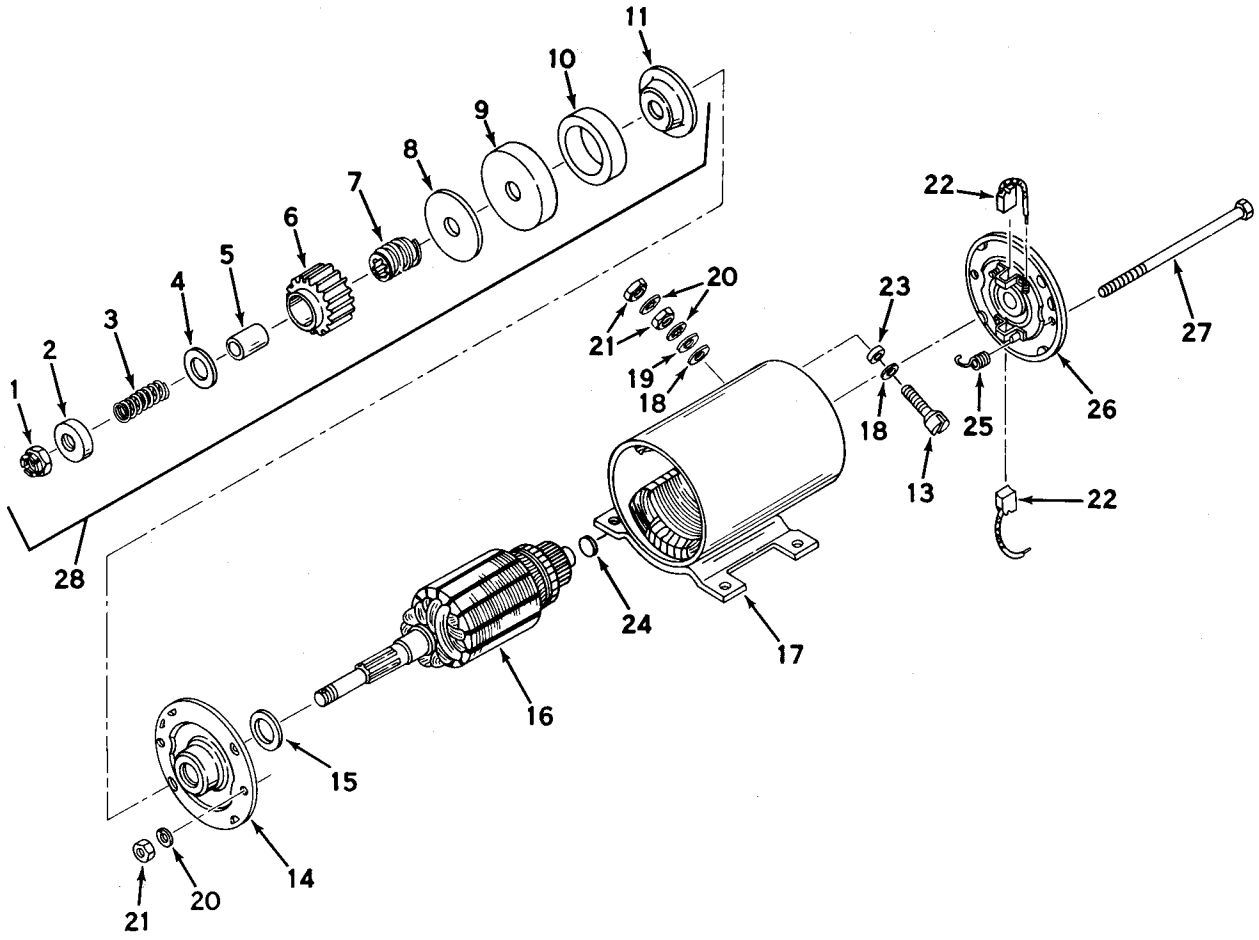

STARTER MOTOR NO. 32468 ASSEMBLY 935E

Ref. No.	Part No.	Description	No. Used
1	32483	Nut, Hex	1
2	32484	Stop, Pinion	1
3	32485	Spring, Anti-drift	1
4	32486	Washer, Pinion	1
5	32487	Sleeve, Anti-drift	1
6	32488	Gear, Pinion	1
7	32489	Shaft, Screw	1
8	32490	Washer, Thrust	1
9	32491	Cup, Cushion	1
10	32492	Cushion, Rubber	1
11	32493	Washer, Thrust	1
13	32499	Bolt, Terminal	1
14	32494	Cap Assy., Drive End (Incl. bearing)	1
15	32495	Washer, Spacing (.024 thick)	2
15	32496	Washer, Spacing (.008 thick)	2
16	32497	Armature	1

Ref. No.	Part No.	Description	No. Used
17	32498	Housing-Assy. (Incl. pole shoes, field coils, terminal post, straight mounting bracket, Nos. 18 thru 21)	1
18	32500	Washer, Insulating	2
19	650168	Washer, Plain	1
20	650131	Washer, Lock	4
21	28710	Nut, Hex	4
22	32505	Brush & Spring Kit	1
23	32501	Bushing, Insulating	1
24	32509	Washer, Spacing	1
25	32507	Spring, Brush	2
26	32506	End Cap Assy., Commutator	1
27	32508	Bolt, Thru	2
28	32481	Drive Assy., Complete (Incl. Nos. 1 thru 11)	1

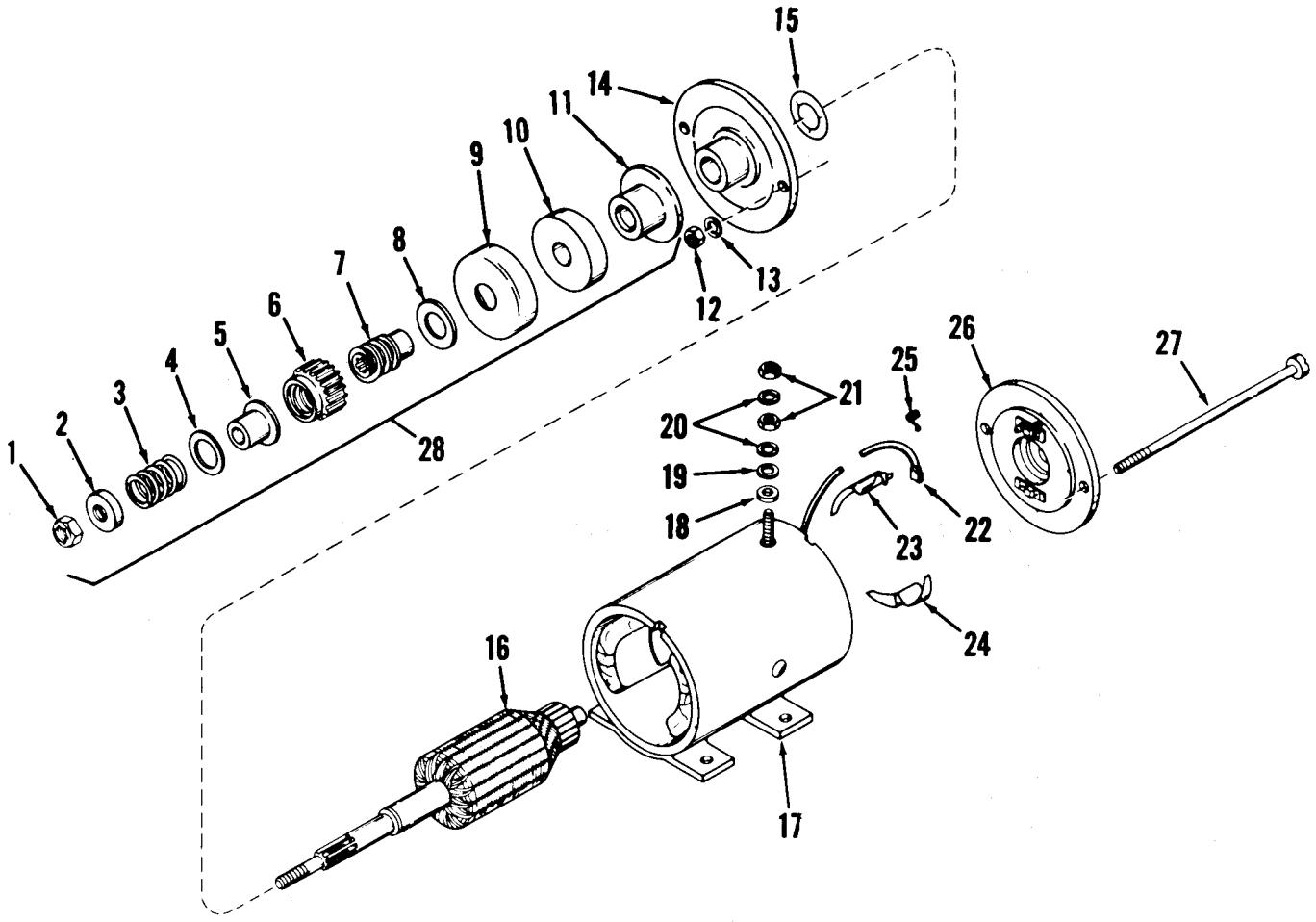

STARTER MOTOR NO. 29965 ASSEMBLY 935E

Ref. No.	Part No.	Description	No. Used
1	30004	Nut, Elastic Stop	1
2	28692	Stop, Pinion	1
3	28693	Spring, Anti-drift	1
4	28694	Washer, Pinion	1
5	28695	Sleeve, Anti-drift	1
6	30005	Gear, Pinion	1
7	30006	Shaft, Screw	1
8	30007	Washer, Thrust	1
9	30008	Cup, Cushion	1
10	30009	Cushion, Rubber	1
11	30010	Washer, Thrust	1
12	30011	Nut, Securing	2
13	30012	Washer, Lock	2
14	30013	Cap Assy., Drive end (Incl. bearing)	1
15	30014	Washer, Spacing (.010 thick) (Use as required)	1
15	30015	Washer, Spacing (.02 thick) (Use as required)	1
16	30016	Armature	1

Ref. No.	Part No.	Description	No. Used
17	30017	Housing Assy. (Incl. pole shoes, field coils, terminal post, straight mounting bracket, Nos. 18 thru 21, 23, 24, & 1 or 22)	1
18	28707	Washer, Insulating	1
19	28708	Washer, Plain	1
20	28709	Washer, Lock	2
21	28710	Nut, Hex	2
22	30018A	Brush & Spring Kit (Incl. No. 25)	2
23	30019	Insulation	2
24	30020	Insulation	2
25	30021	Spring, Brush	2
26	30022	End Cap Assy., Commutator (Incl. Nos. 25 & 1 of No. 22)	1
27	30023	Bolt, Thru	2
28	30003	Drive Assy., Complete (Incl. Nos. 1 thru 11)	

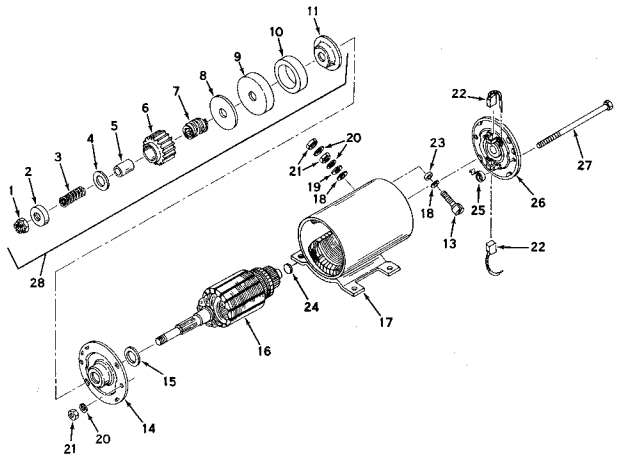

STARTER MOTOR NO. 32468A ASSEMBLY 935E

Ref. No.	Part No.	Description	No. Used
1	32483	Nut, Hex	1
2	32484	Stop, Pinion	1
3	32485	Spring, Anti-drift	1
4	32486	Washer, Pinion	1
5	32487	Sleeve, Anti-drift	1
6	32488	Gear, Pinion	1
7	32489	Shaft, Screw	1
8	32490	Washer, Thrust	1
9	32491	Cup, Cushion	1
10	32492	Cushion, Rubber	1
11	32493	Washer, Thrust	1
13	32499	Bolt, Terminal	1
14	32494	Cap Assy., Drive end (Incl. Bearing)	1
15	32495	Washer, Spacing (.024 thick)	2
15	32496	Washer, Spacing (.008 thick)	2
16	32497	Armature	1
17	32843	Housing Assy. (Incl. pole shoes, field coils, terminal post, straight mounting bracket, Nos. 18 thru 21)	1
18	32500	Washer, Insulating	2
19	650168	Washer, Plain	1
20	650131	Washer, Lock	4
21	28710	Nut, Hex	4
22	32838	Brush & Spring Kit	1
23	32501	Bushing, Insulating	1
24	32509	Washer, Spacing	1
25	32837	Spring, Brush	2
26	32842	End Cap Assy., Commutator	1
27	32508	Bolt, Thru	2
28	32481	Drive Assy., Complete (Incl. Nos. 1 thru 11)	1

REWIND STARTER NO. 590420 ASSEMBLY 935

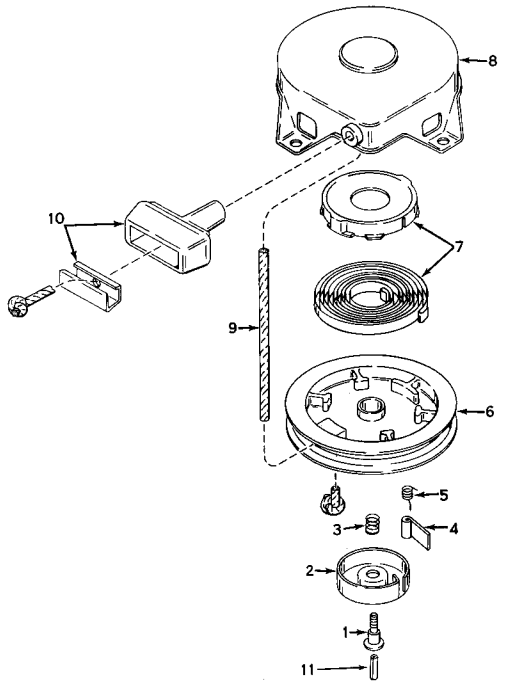

Ref. No.	Part No.	Description	No. Used
1	590409	Screw, Retainer	1
2	590410	Retainer, R. H.	1
3	590411	Spring, Brake	1
4	590148	Dog, Starter	1
5	590412	Spring, R. H. Dog	1
6	590413A	Pulley	1
7	590414	Spring & Keeper Assy.	1
8	590415	Housing Assy., Starter	1
9	590386	Rope, Starter	1
10	590387	Handle Assy., Starter	1
11	590459	Pin, Centering	1

CARBURETOR ADJUSTMENTS

Do not make unnecessary adjustments. Factory settings are correct for most applications. If adjustments are needed, proceed as follows:

1. Close power adjusting needle by turning to right (clockwise). Close finger tight only. Forcing will cause damage. (See Fig. 1)

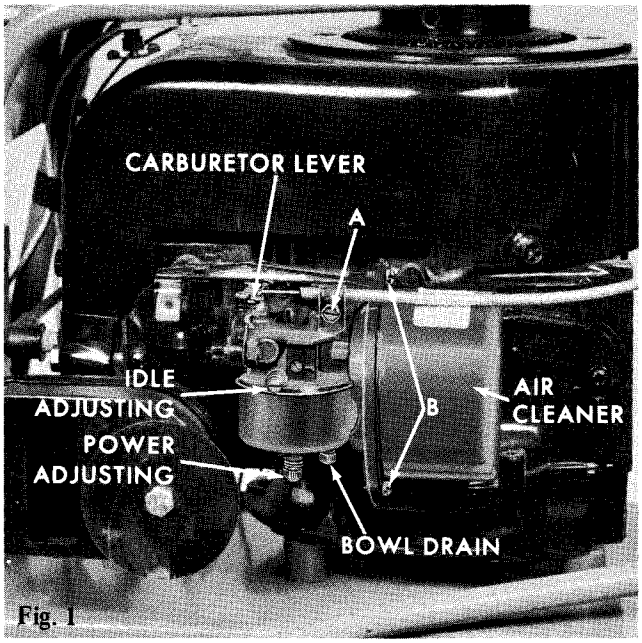

Fig. 1

2. Open one turn (counterclockwise).
3. Close idle adjusting needle by turning to right (clockwise). Close finger tight only. Forcing will cause damage. (See Fig. 1)
4. Open one and one/half turns (1-1/2) counterclockwise.
5. Start Engine. Follow starting instructions in your owner's manual.
6. With Throttle open (carburetor control at "RUN" or "FAST" position), adjust power adjusting needle one-eighth (1/8) turn at a time forward or backward until engine runs smoothly. If engine tends to stall under load enrich mixture slightly (counterclockwise).
7. Hold throttle lever closed or move Carburetor Control to "IDLE" or "SLOW" position and adjust idle adjusting needle until engine runs smoothly, proceeding as in step 6 above.
8. Allow several seconds between each adjustment when performing either step six (6) or seven (7) to allow engine to react to new setting.
9. Maximum engine speeds are preset at factory and should not be changed except by a qualified Toro Service repairman who has the necessary equipment.
10. IMPORTANT: Air cleaner should always be checked or cleaned first prior to carburetor adjustments. In many cases a dirty air cleaner results in unnecessary carburetor adjustments. (See below for servicing air cleaner).

THROTTLE TO CARBURETOR ADJUSTMENT

For proper adjustment of the throttle control to carburetor arm proceed as follows:

A) With engine shut off, loosen screw "A". (See Fig. 1)

B) Place throttle control in choke position.

C) Move carburetor lever to choke position.

D) Tighten screw "A".

E) Move throttle control lever to stop position, proper adjustment is when the carburetor arm is in firm contact with the shorting out strap (Copper color), 935 only.

AIR CLEANER SERVICING INSTRUCTIONS

Clean element periodically but more frequently in extreme dust conditions. Clean element when loss of power is also noticeable. To clean element proceed as follows:

A) Loosen the two screws (B) holding air cleaner element to the carburetor (See Fig. 1).

B) Remove element from canister by turning counterclockwise.

C) Tap air cleaner element lightly on a flat surface to clean.

D) Replace element into canister and reassemble.

E) Replace element if bent or damaged in any manner.

F) Replace with a new air cleaner element after approximately 25 hours of use or as environmental conditions dictate.

WARNING

Never operate engine with battery leads disconnected or battery removed from circuit (taken out of equipment) unless plug is removed from regulator rectifier. Failure to observe will burn out regulator rectifier.

STORAGE INSTRUCTIONS

In event engine is to be stored for any length of time (30 days or more) or at the end of mowing season, prepare as follows:

1. Drain gas tank completely by removing fuel line at the carburetor or fuel tank, whichever is easier.

CAUTION: Drain into container outdoors away from fire or flame.

2. DRAIN CARBURETOR

   Drain by pressing upward on bowl drain. (See Fig. 1).

3. Inside protection of engine for storage is performed by removing spark plug and pouring one ounce of SAE 30 oil through spark plug hole into cylinder. Crank engine without starting several times to spread oil over cylinder walls. Replace spark plug.
4. Disconnect battery from circuit.

935 AND 935E SPECIFICATIONS

ENGINE: 7 H.P., 4 cycle air cooled, dry-paper element air cleaner.

FUEL TANK CAPACITY: One Gallon.

TRANSMISSION: 3 Speed forward and 1 reverse. Transmission and differential combined enclosed in an aluminum die cast case and using sintered powder metal gears. ¾ axle shaft with 3/16 keyway. Lubricated with #90 gear lubricant.

Reductions: 1st – 26.6:1
2nd – 13.6:1
3rd – 9.1:1
Rev. – 19.5:1

TRACTION DRIVE: "A" section V-belt from 2.25 PD engine pulley to 7.7 PD transmission input pulley (3.42:1 reduction).

Total reduction engine to wheels:
1st – 91.1:1
2nd – 46.6:1
3rd – 31.2:1
Rev. – 66.8:1

SPEEDS: @3400 Engine RPM.

1st – 1.89 MPH
2nd – 3.71 MPH
3rd – 5.53 MPH
Rev. – 2.59 MPH

TIRES: Front: 13 x 5.00-6 tubeless pneumatic terra-tire
Rear: 18 x 8.50-8 tubeless pneumatic terra-tire

WHEELS: Front and Rear – stamped steel discs with drop center rims.

CONSTRUCTION: 11 gage HRPO steel formed channel frame with 3/16 steel axle support. 3/4" diameter CRS spindles with 11 gage front axle. 18 gage one-piece rear fender.

STEERING: 13" diameter 3 spoke 3" dished steering wheel. 4:1 gear reduction steering sector.

CUTTER DRIVE: Belt drive from jackshaft ahead of engine.

CUTTER HOUSING: Semi-floating 12 gage tempered steel housing attached to chassis by 1/2" diameter steel pins.

CUTTER WIDTH: 36"

BLADE: Two 18" blades – 8 gauge fully hardened alloy steel.

BLADE TIP SPEED: 16,500 FPM @ 3400 Engine RPM

CUTTER SPINDLE: Steel mounted in 2 single rows, double sealed ball bearings.

HEIGHT OF CUT: 1 1/2" to 4" by control lever with infinite height variation.

CONTROLS:

ENGINE: Control wire and casing with stop, slow, fast and choke positions mounted on dash.

TRANSMISSION: Single lever with four position H Pattern.

TRACTION CLUTCH: Foot operated pedal. Depressing pedal disengages idler pulley from belt.

BRAKE: Foot operated pedal on right side.

CUTTER: Single lever. In lock-out position blade belt idler is disengaged and blade brake applied. In engaged position brake is released and cutter belt engaged.

DIMENSIONS:

Wheel Base: 42"
Wheel Tread: Front: 25" Rear: 23 3/4"
Width: Without cutter housing: 32"
With cutter housing: 39"
Length: 57"
Height: 35"
Turning Radius: 25 1/2"

WEIGHT: 330 pounds with cutter housing.

SAFETY FEATURES: Meets A.S.A. specifications.
Separate brake and clutch pedals.
Automatic blade brake.
Enclosed and guarded drive.

OPTIONAL EQUIPMENT: Snow blade attachment.
Snow blower attachment.
Headlight Kit.
Lawn Sweeper
Tire Chains
Dump Cart
Roller
Aerator
Spreader-Seeder

TIRE PRESSURE: For shipping purposes, the tires have been overinflated. The recommended tire pressure is 10-12 lbs.

IMPORTANT ORDERING INSTRUCTIONS

Repair parts are available from your TORO dealer. To insure getting correct parts without delay, please furnish the following information:

1. Serial number of your product as shown on the name plate.
2. Part number, description and quantity of each part required.
3. Name and address where parts are to be shipped.
4. Do NOT order by reference number, use part number only.

MAINTENANCE RECORD

Date	Hours Used	Oil Change	Air Cleaner Service	Lubri-cation	Sharpen Blade	Winter Storage	Spring Service	Spark Plug Gap

MAINTENANCE RECORD

Date	Hours Used	Oil Change	Air Cleaner Service	Lubri-cation	Sharpen Blade	Winter Storage	Spring Service	Spark Plug Gap