TORO

MODEL NOS. 21104 – 000001 & UP

21666 – 000001 & UP

21677

21" WHIRLWIND S.P. KEY-LECTRIC

PARTS CATALOG

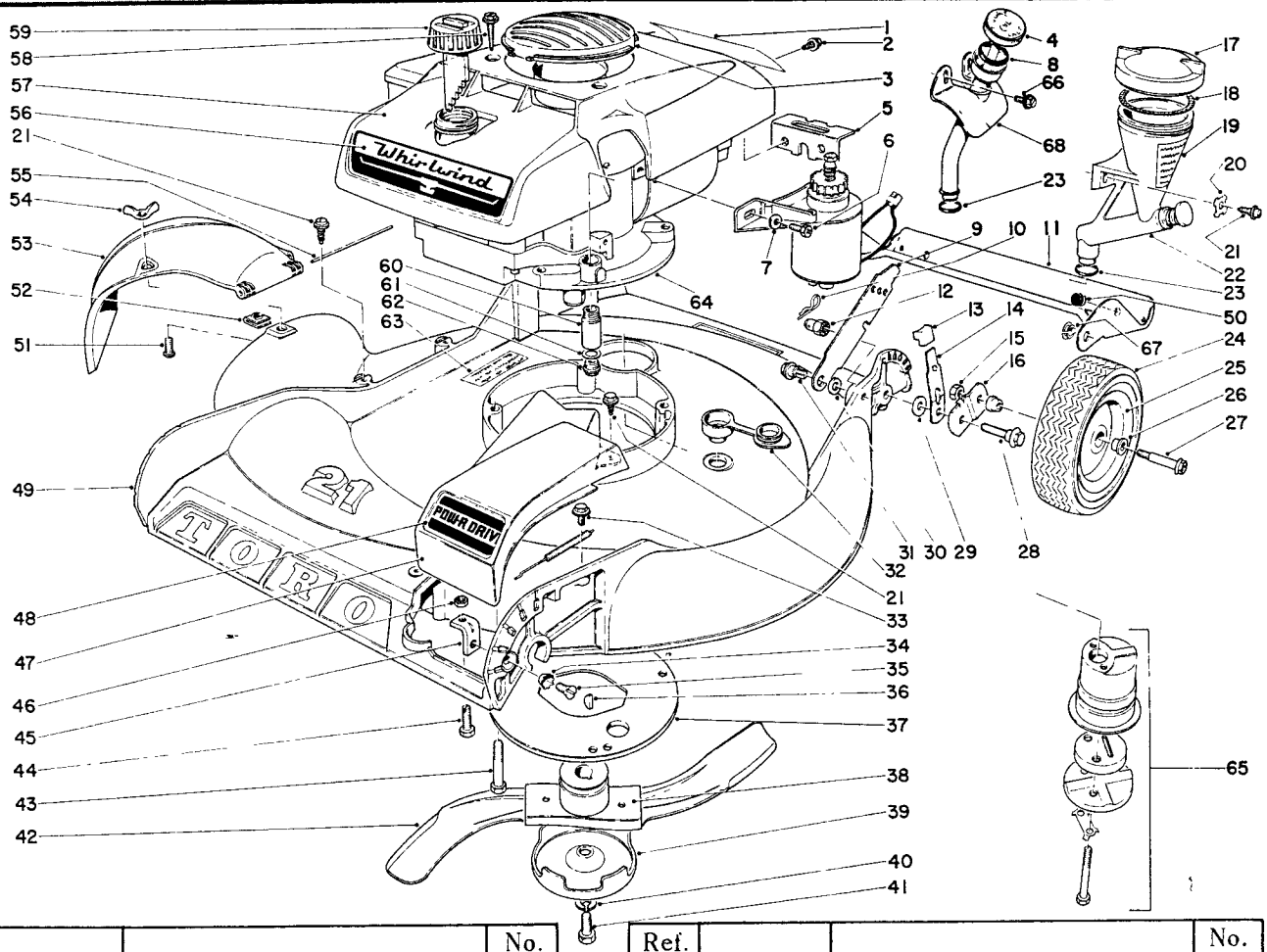

Ref. No.	Part No.	Description	No. Used
1	6-1260	Decal, Maintenance	1
2	32104-76	Screw, Self Tapping	5
3	5-3516	Insert, Shroud	1
4	5-4591	Stick, Dip (Used on Model No. 21666)	1
5	5-3307	Bracket, Rear Shroud	1
6	321-2	Capscrew	2
7	3256-22	Washer	2
8	237-75	"O" Ring (Used on Model No. 21666)	1
9	5-2446	Latch, Handle	2
10	3290-255	Hair Pin Cotter	2
11	4-8889	Safety Shield, Rear	1
12	3-6482	Handle Pivot Nut	2
13	5-0656	Knob	1
14	5-3357	Spring Arm Assembly	2
15	32146-12	Nut, Stop	2
16	5-4471	Pivot Arm Assembly	1
17	3-8429	Cap, Reservoir (Incl. Ref. 18) (Used on Model No. 21104)	1

Ref. No.	Part No.	Description	No. Used
18	5-1391	"O" Ring (Used on Model No. 21104)	1
19	5-2947	Decal, Oil Fill Instr. (Used on Model 21104)	1
20	3290-261	Washer (Used on Model No. 21104)	2
21	32104-75	Screw, Self Tapping	2
22	5-0625	Oil Reservoir Assy. (Used on Model No. 21104)	1
23	237-65	"O" Ring (Used on Models 21104 & 21666)	1
24	4-2600	Tire	4
25	3-7350	Wheel Assy. (Incl. Ref. 26)	2
26	5-4504	Bushing, Wheel	4
27	5-4503	Wheel Bolt	2
28	5-3351	Screw, Pivot	2
29	5-4460	Washer, Pivot	2
30	3-3287	Spacer	2
31	5-2490	Screw, Shoulder	2
32	5-0655	Plug, Washout	1

Continued on next page

COPYRIGHT 1969 BY
TORO MANUFACTURING CORPORATION
MINNEAPOLIS, MINN. 55420 – U.S.A.

1969-70
(11/13/69)

Price 25 cents

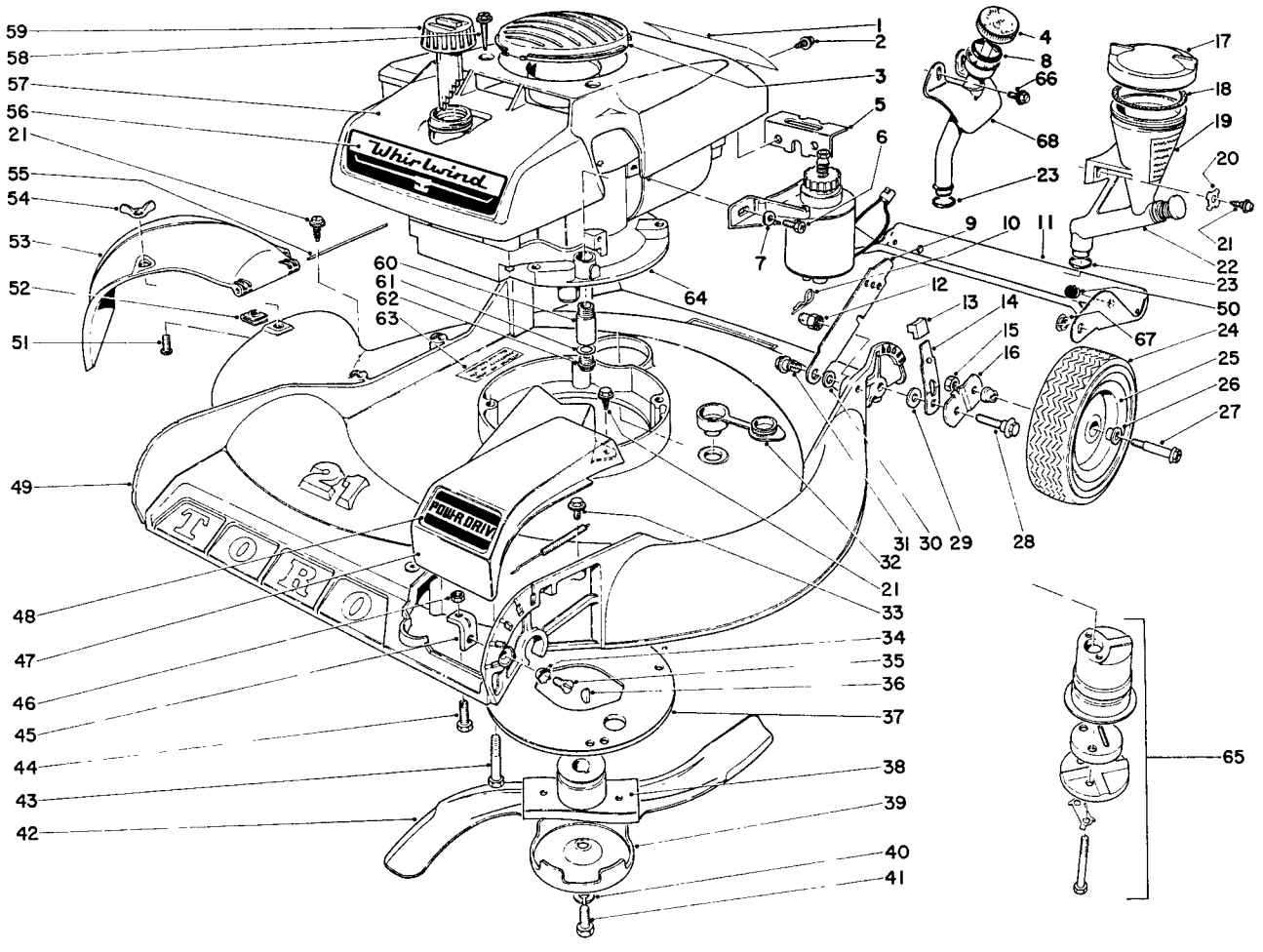

Ref. No.	Part No.	Description	No. Used
33	32140-69	Screw	1
34	3255-12	Lockwasher	1
35	32108-20	Screw, Flat Head	1
36	3257-3	Key, Woodruff	1
37	3-7626	Guard, Grass	1
38	3-7286	Blade Retainer Assy.	1
39	5-9530	Cup, Anti-Scalp	1
40	3253-22	Lockwasher	1
41	3-5246	Screw	1
42	3-6286	Blade	1
43	32140-49	Screw, Sems	3
44	3-7281	Screw	1
45	3-7278	Adjustment Bracket	1
46	3218-1	Nut, Jam	1
47	5-3305	Cover, Belt Drive	1
48	5-3303	Decal, Power Drive	1
49	5-3324	Housing	1
50	5-6450	Skid Button	2
51	3290-133	Screw, Round Head	1
52	3290-199	Nut, Speed	1
53	5-3311	Deflector	1
54	32103-14	Nut, Wing	1
55	3-2644	Pin, Hinge	1

Ref. No.	Part No.	Description	No. Used
56	5-3304	Decal, Whirlwind	1
57	5-9570	Shroud	1
58	32104-88	Screw, Self Tapping	2
59	5-3460	Gas Cap Assembly	1
60	3-0761	Extension, Oil Drain	1
61	†28833	Gasket, Oil Drain	1
62	†27244	Plug, Oil Drain	1
63	3-7643	Decal, Warning	1
64	221-356	Engine (Used on Model 21666)	1
*	221-330	Engine (Used on Model 21104)	1
65	2-9329	Muffler Assembly	1
66	32140-66	Screw (Used on Model 21666)	2
67	256-194	Nyliner	2
*	5-9600	Container, Oil (Used on Model No. 21104)	1
*	5-3556	Starter Rope Assembly	1
*	4-8069	Loose Parts Kit (Used on Model No. 21104)	1
*	4-9499	Loose Parts Kit (Used on Model No. 21666)	1
*	5-4472	Arm, Pivot – Right Rear	1
68	6-0470	Tube, Oiler (Used on Model No. 21666)	1

*Not Illustrated
†Obtain from your local Lauson dealer

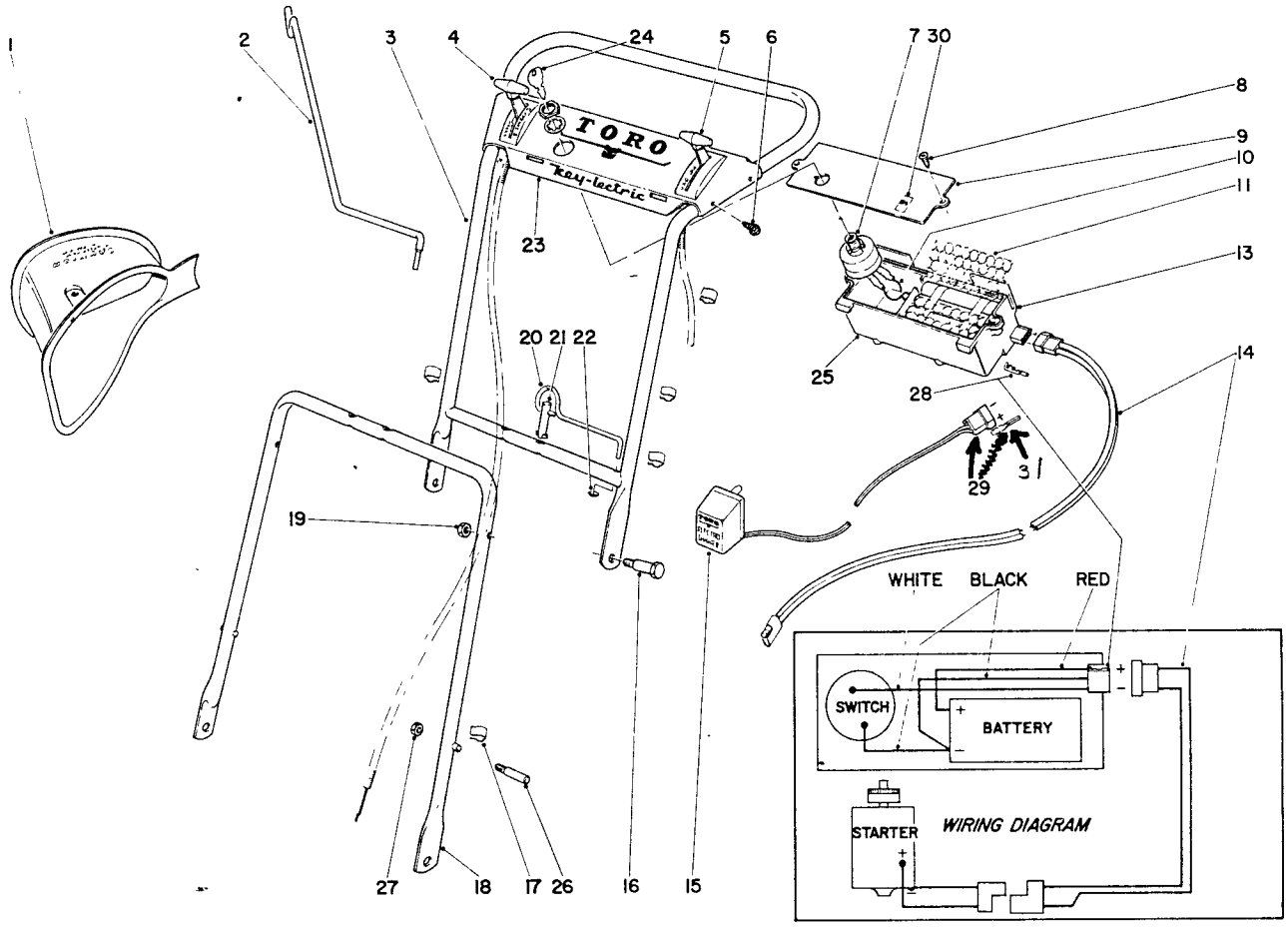

HANDLE ASSEMBLY

Ref. No.	Part No.	Description	No. Used
1	5-3442	Attachment, Bag	1
2	3-0690	Hanger, Bag	1
3	5-4450	Handle, Upper	1
4	5-9560	Control, Throttle	1
5	5-9670	Control, Traction	1
6	32104-76	Screw, Self Tapping	4
7	5-4023	Switch, Starter	1
8	32104-91	Screw, Self Tapping	2
9	5-4022	Cover, Battery Pack	1
10	5-3773	Wire, Lead	1
11	5-3726	Spacer, Battery	1
13	5-3730	Container, Battery Pack	1
14	5-4756	Harness, Wiring	1
15	5-9680	Charger, Battery	1
16	5-4476	Screw	2
17	218-75	Clip	5

Ref. No.	Part No.	Description	No. Used
18	5-4424	Handle Assy., Lower	1
19	32146-8	Locknut	2
20	5-4421	Spring, Handle Latch	1
21	5-4422	Pin, Latch	1
22	3290-299	Clip, Push On	1
23	5-3508	Escutcheon Plate	1
24	218-412	Key	2
25	4-8479	Battery Pack Assy. (Incl. Ref. 10 – 13)	1
*	4-2049	Bag, Set of 2	1
*	3-6279	Grass Bag Locking Strap	1
†26	6-6940	Handle Pin	2
†27	32146-8	Locknut	2
28	218-441	Terminal – female	3
29	218-444	Terminal – Plastic module	2
30	5-5920	Decal	1
31	218-443	Male Terminal	

*Not Illustrated
†Replacement Parts Only

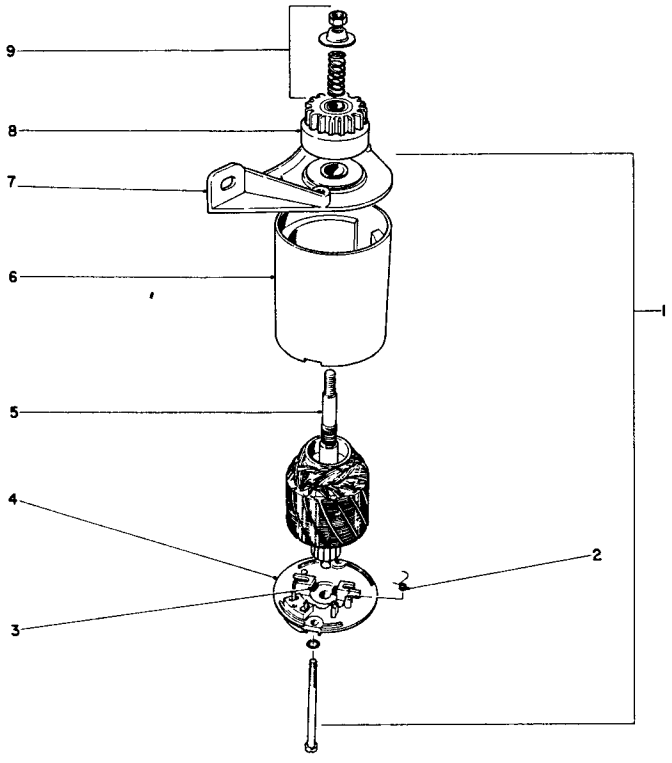

STARTER MOTOR AND PINION

Ref. No.	Part No.	Description	No. Used
1	5-6510	Starting Motor w/o Pinion	1
2	218-436	Spring Set	1
3	218-435	Brush Set	1
4	218-434	Head Assy., Commutator End	1
5	218-432	Armature	1
6	218-433	Frame & Pole Assy.	1
7	218-437	Head, Drive End	1
8	5-6520	Pinion Assy.	1
9	218-377	Cup, Nut, Spring Kit	1

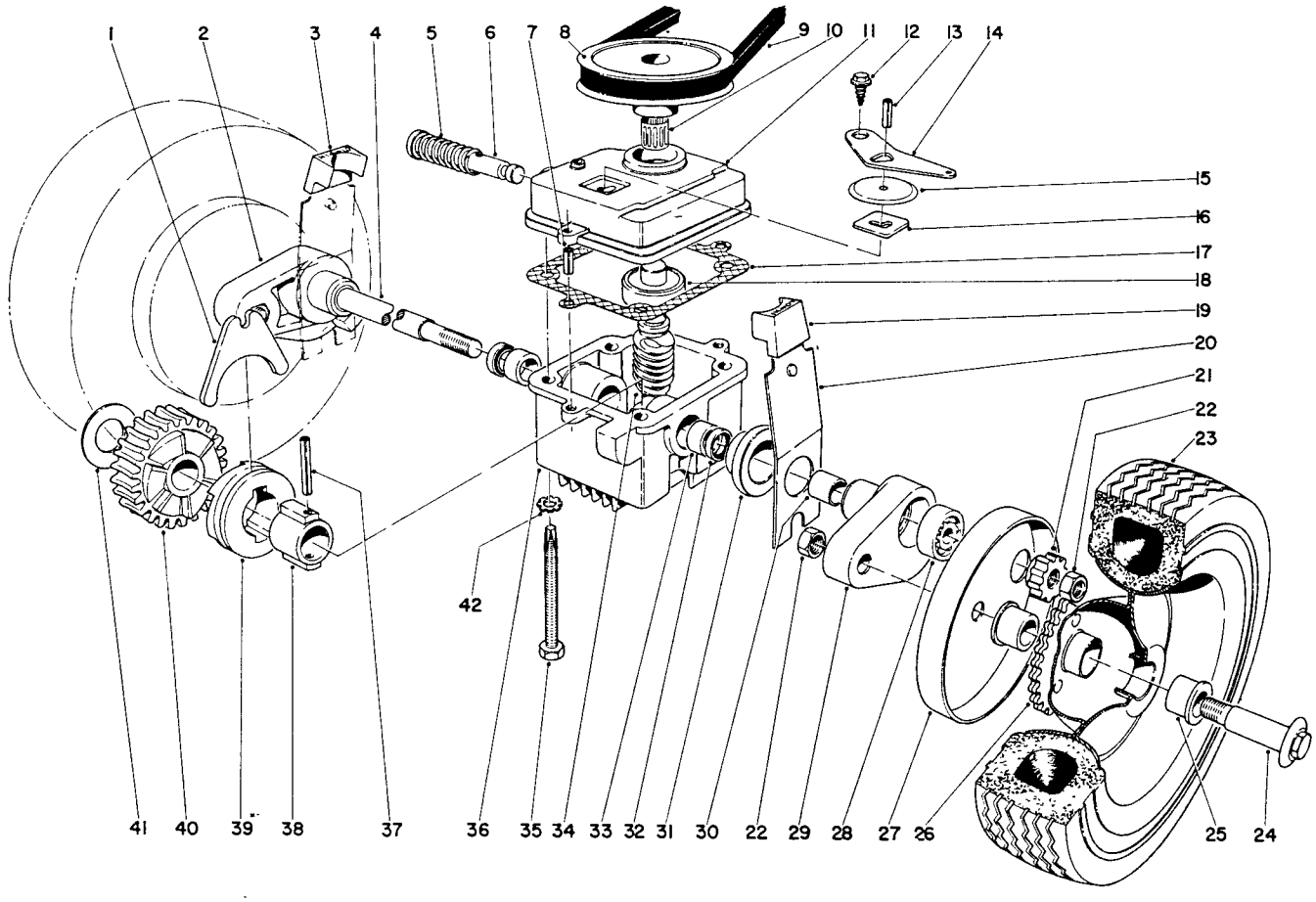

FRONT AXLE & GEAR CASE ASSEMBLY

Ref. No.	Part No.	Description	No. Used
1	5-3247	Fork, Shift	1
2	2-6359	Pivot Arm (Incl. Ref. 30)	1
3	5-0656	Knob, R. Front & L. Rear	1
4	3-0720	Shaft, Drive	1
5	3-0731	Spring	1
6	5-3248	Rod, Shift	1
7	32121-1	Pin, Roll	2
8	5-1615	Pulley	1
9	5-4505	Belt	1
10	3290-286	Ring, Tolerance	1
11	5-3283	Cover	1
12	32140-64	Screw, Self Tapping	1
13	32121-23	Pin, Roll	1
14	5-3252	Arm, Shift	1
15	3-2615	Cap, Dust	1
16	3-0681	Plate, Latch	1
17	3-0734	Gasket	1
18	251-144	Bearing	1
19	5-0657	Knob, L. Front & R. Rear	2
20	3-2640	Arm, Spring	2
21	3-0738	Gear	2
22	32146-12	Nut, Stop	4

Ref. No.	Part No.	Description	No. Used
23	4-2600	Tire	2
24	3-5117	Bolt, Wheel	2
25	5-4504	Bushing	4
26	3-7570	Wheel Assembly	2
27	3-5235	Cover, Wheel	2
28	251-183	Bearing	2
29	2-6369	Pivot Arm (Incl. Ref. 30)	1
30	256-1	Bushing	2
31	5-0745	Cap, End	2
32	253-86	Seal, Oil	2
33	256-110	Bushing	2
34	5-1616	Shaft, Worm	1
35	32140-63	Screw, Sems	4
36	3-1079	Case, Gear	1
37	32121-40	Pin, Roll	1
38	3-0721	Sleeve	1
39	3-0722	Jaw, Clutch	1
40	3-0723	Gear, Worm	1
41	3-0724	Washer	1
42	3255-7	S.P. Washer	4
	4-0809	Gear Case Assy., Complete	1

ENGINE MODEL LAV35-40534H

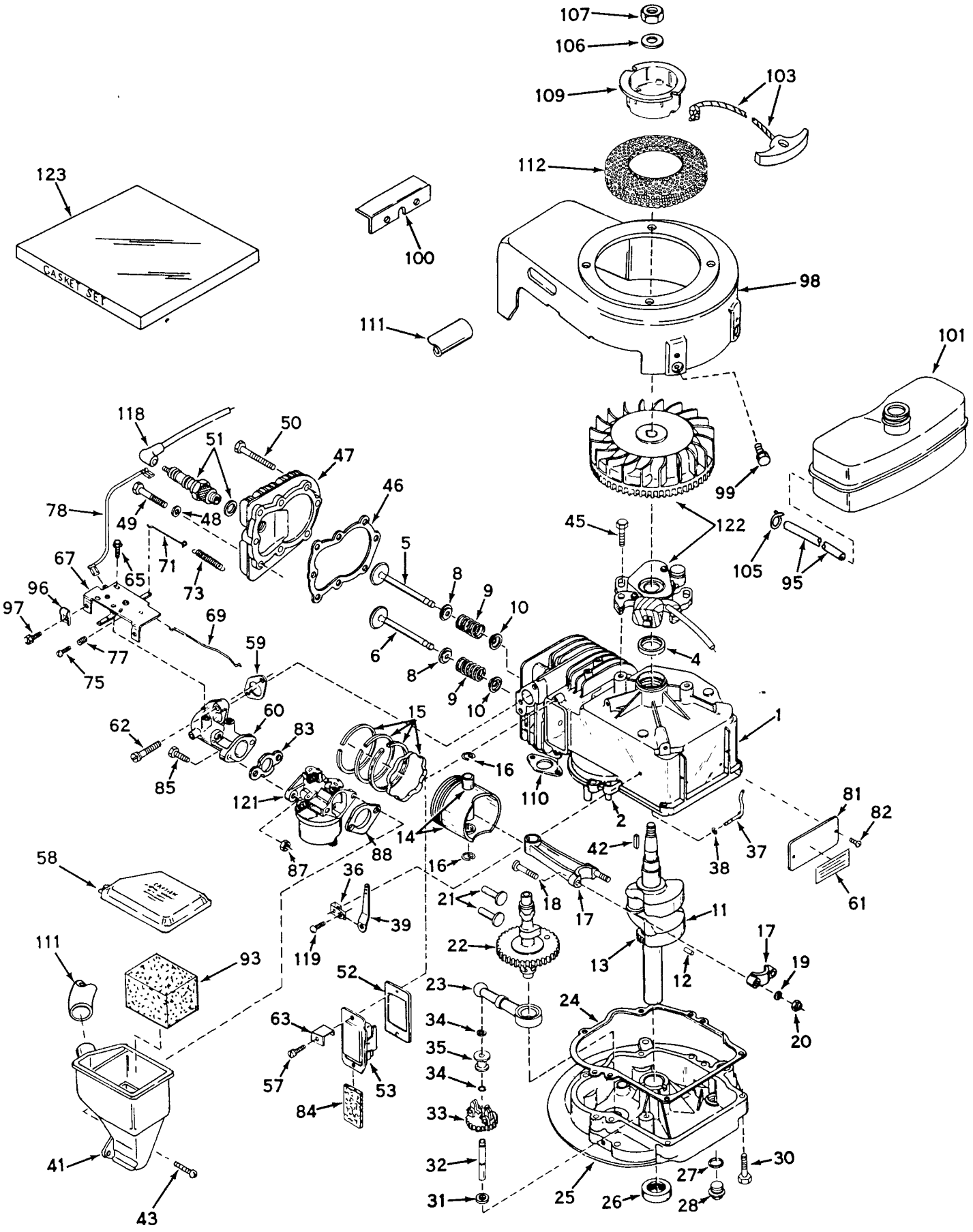

Ref. No.	Part No.	Description	No. Used
1	32616	Cylinder Assy. (Incl. Ref. Nos. 2 & 4	1
2	26727	Pin, Dowel	2
4	*29183	Seal, Oil	1
5	29314A	Valve, Intake (Std.) (Incl. Nos. 8, 9 & 10)	1
5	29316A	Valve, Intake (1/32" Oversize) (Incl. Nos. 8, 9 & 10)	1
6	29313A	Valve, Exhaust (Std.) (Incl. Nos. 8, 9 & 10)	1
6	29315A	Valve, Exhaust (1/32" Oversize (Incl. Nos. 8, 9 & 10)	1
8	31671	Cap, Upper Valve Spring	2
9	31672	Spring, Valve	2
10	31673	Cap, Lower Valve Spring	2
11	29223	Crankshaft Assy. (Incl. Nos. 12 & 13)	1
12	29783	Pin, Crankshaft Gear	1
13	27613	Gear, Crankshaft	1
14	31307	Piston & Pin Assy. (Incl. 2 of No. 16) (Std.)	1
14	31308	Piston & Pin Assy. (Incl. 2 of No. 16) (.010 Oversize)	1
14	31309	Piston & Pin Assy. (Incl. 2 of No. 16) (.020 Oversize)	1
15	28986	Ring Set, Piston (Std.)	1
15	28987	Ring Set, Piston (.010 O.S.)	1
15	28988	Ring Set, Piston (.020 O.S.)	1
16	20381	Ring, Piston Pin Retaining	2
17	30963B	Rod Assy., Connecting (Incl. Nos. 18, 19 & 20)	1
18	26706	Bolt, Connecting Rod	2
19	20747	Washer, Connecting Rod	2
20	27573	Nut, Lock	2
21	27241	Lifter, Valve	2
22	32260	Camshaft	1
23	29914	Pump Assy., Oil	1
24	*26750A	Gasket, Mounting Flange	1
25	31907	Flange Assy., Mtg. (Incl. Nos. 26, 27, 28 & 32)	1
26	*26208	Seal, Oil	1
27	*28833	Gasket, Drain Plug	1
28	27244	Plug, Oil Drain	1
30	650488	Screw, Hex Hd. Cap, Sems	6
31	30590A	Washer, Flat	1
32	30574	Shaft, Mech. Governor	1
33	30591	Gear Assy., Governor	1
34	29193	Ring, Retaining	2
35	30588A	Spool, Governor	1
36	31335	Clamp, Governor Lever	1
37	30589	Rod, Governor (Incl. No. 38)	
38	28277	Washer, Flat	1
39	32651	Lever, Governor	1
41	33005	Body, Air Cleaner	1
42	27247	Key, Flywheel	1
43	650707	Screw, Fil. Hd. Sems	2
45	650489	Screw, Hex Hd. Cap, Sems	2

Ref. No.	Part No.	Description	No. Used
46	*29953B	Gasket, Cylinder Head	1
47	30579	Head, Cylinder	1
48	26073	Washer	5
49	6021	Screw, Hex Hd. Cap	5
50	650694	Screw, Hex Hd. Cap	3
51	21943	Plug, Spark (Champion J-8 or Equivalent)	1
52	*31619	Gasket, Breather	1
53	31337	Breather Assy. (Incl. Nos. 52 & 84)	1
57	650128	Screw, Phil. Fil. Hd., Sems	2
58	33007	Cover, Air Cleaner	1
59	*30188	Gasket, Intake Pipe	1
60	33004	Pipe, Intake	1
61	31865	Decal, Name & Instruction	1
62	650176	Screw, Phil. Fil. Hd. Sems	2
63	30593	Clip, Magneto Wire	1
65	30200	Screw, Hex Slot. Hd. Sems, S.T.	2
67	31736	Control Assy., Speed	1
69	32652	Link, Throttle to Governor	1
71	32653	Link, Governor Spring	1
73	31386	Spring, Governor	1
75	650549	Screw, Fil. Slot. Hd. Mach.	1
77	31342	Spring, Compression	1
78	31388	Wire, Ground	1
81	31345	Plate, Identification	1
82	28670	Screw, Drive	2
83	26756	Gasket, Carburetor	1
84	31410	Element, Breather	1
85	6201	Screw, Hex Head Cap	2
87	29752	Nut, Hex Jam	2
88	*33051	Gasket, Cleaner Bracket	1
93	33006	Element, Air Cleaner	1
95	29774	Line, Fuel	1
96	27793	Clip, Conduit	1
97	28942	Screw, Slot. Hex Hd. Sems	1
98	33009	Housing, Blower	1
99	650561	Screw, Hex Hd. Cap, Sems	2
100	**	Bracket, Shroud	1
101	32170A	Tank, Fuel	1
103	590343	Rope Assy., Starter	1
105	26460	Clamp, Fuel Line	1
106	650490	Washer, Belleville	1
107	650607	Nut, Flywheel	1
109	32723	Pulley, Rope Starter	1
110	*30081	Gasket, Muffler	1
111	33008	Tube, Air Cleaner	1
112	590417	Screen, Starter Cup	1
118	610118	Cover, Spark Plug	1
119	650548	Screw, Hex Slot. Wash. Hd.	1
121	631585	Carburetor	1
122	610772	Magneto	1
123	31409D	Gasket Set (Including Items Marked *)	1

**Order from Toro Dealer

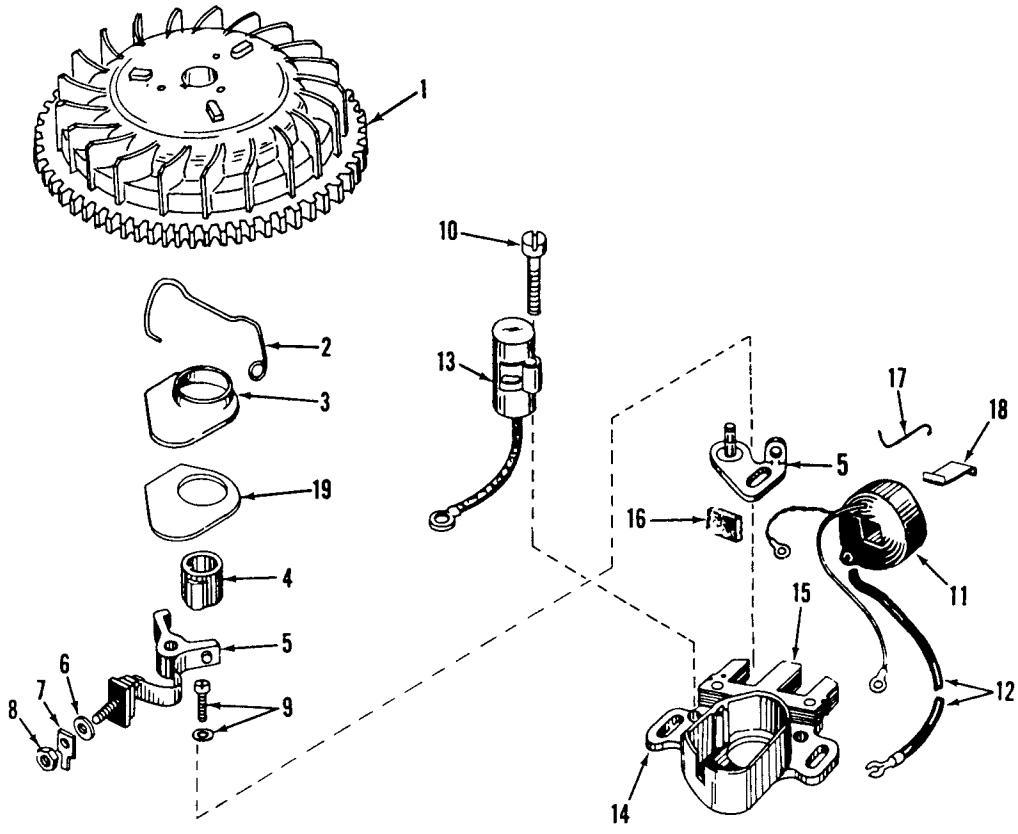

MAGNETO NO. 610772

Ref. No.	Part No.	Description	No. Used
1	610757	Flywheel	1
2	30551	Spring, Breaker Box	1
3	30550	Cover, Breaker Box Dust	1
4	30552	Cam, Breaker	1
5	30547A	Contact Assy., Breaker	1
6	610385	Washer, Terminal	1
7	30843	Tab, Ground Terminal	1
8	610408	Nut, Terminal	1
9	29181	Screw & Washer, Breaker	1
10	610593	Screw, Condenser Fastening	1
11	30560	Coil Assy. (Incl. Ref. 12, 13 & 18)	1

Ref. No.	Part No.	Description	No. Used
12	30554	Wire, Lead	1
13	30548A	Condenser	1
14	30545	Core & Plate	1
15	30561A	Stator Assy. (Incl. Ref. 2, 3, 5 thru 14 and 16 thru 19)	1
16	30549	Felt, Cam Wiper	1
17	31311	Clip, Coil Locking	1
18	29629	Spring, Coil Wedge	1
19	32052	Gasket, Dust Cover	1

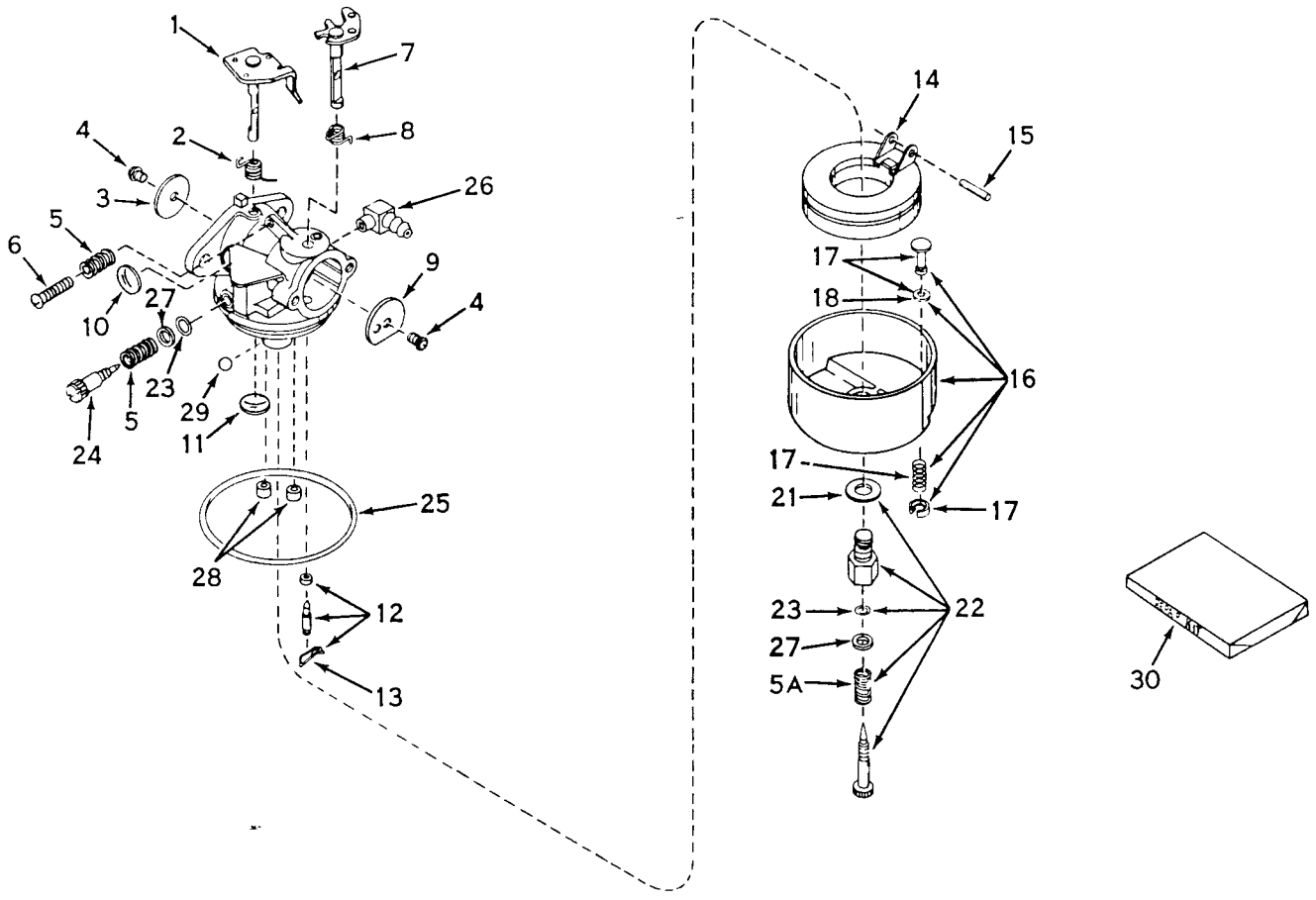

CARBURETOR NO. 631585

Ref. No.	Part No.	Description	No. Used
1	630983	Shaft & Lever Assy., Throttle	1
2	631279	Spring, Throttle Return	1
3	631036	Shutter, Throttle	1
4	650506	Screw	2
5	630766	Spring, Idle Reg. Screw	2
5A	630738	Spring, Main Adj. Screw	1
6	650417	Screw, Idle Regulating	1
7	630973	Shaft & Lever Assy., Choke	1
8	630821	Spring, Choke Return	1
9	631582	Shutter, Choke	1
10	630748	Plug, Welch	1
11	631027	Plug, Welch	1
12	*631021	Inlet Needle, Seat & Clip Assy. (Incl. No. 13)	1
13	631022	Clip, Inlet Needle	1
14	631023	Float, Carburetor	1
15	*631024	Shaft, Float	1
16	631025	Bowl & Drain Assy., Float (Incl. No. 17)	1

Ref. No.	Part No.	Description	No. Used
17	27136A	Plunger Assy., Drain (Incl. No. 18	1
18	27554	Gasket, Drain Plunger	1
19	631039	Pin	1
21	27110	Gasket, Bowl-to-Body	1
22	*631583	Adjustment Screw Assy., Main (Incl. Nos. 5A, 21, 23 & 27)	1
23	*630740	"O" Ring, Adjustment Screw	2
24	*631078	Screw, Idle Adjustment	1
25	631028	Gasket, Bowl-to-Body	1
26	631038	Fitting, Fuel Inlet	1
27	630739	Washer	2
28	630747	Plug, Cup	2
29	631081	Ball, Aluminum	1
30	631584	Repair Kit (Including Items Marked *)	1

BATTERY CHARGING

If the battery has been exhausted by extensive use without charging, at least 48 hours is needed to restore full charge.

Use your TORO charger to replace energy removed from the battery POW-R-PACK. For continued peak performance and long life, the battery should be charged for 24 hours after each cutting. However, for convenience, the battery can be left on continuous charge when the mower is not in use.

To charge, proceed as follows:

1. Disconnect the connector from the receptacle on the battery POW-R-PACK.
2. The battery POW-R-PACK may be left on the mower when charging, or it may be removed for charging at a more convenient location. Remove the key and flex the mounting tabs slightly and the container will pivot down and off from the mower.
3. Insert the charger connector into the receptacle on the battery POW-R-PACK.
4. Insert the charger into a 115 VAC, single phase, 60 cycle outlet.
5. The battery is now on charge and will remain so until the charger is removed.

NOTE: Use only the Toro battery charger supplied with your mower. Any other brand of charger may permanently damage the battery POW-R-PACK.

OFF SEASON STORAGE OF BATTERY POW-R-PACK

If the battery POW-R-PACK has not been used for an extended period of time (winter storage, brand new in the carton, etc.), you should charge it for 48 hours or more to restore full charge.

During the off season storage your battery POW-R-PACK may be left on the mower or removed and stored in a separate location. It is recommended that the battery POW-R-PACK be stored in a cool, dry area during off season storage.

DO NOT leave the battery POW-R-PACK on charge throughout a winter storage period; this will shorten the useful life of the battery POW-R-PACK. During this time of idleness, the battery will lose some or all of its charge and may not be able to start the mower the following spring. Therefore, you will want to charge it for a minimum of 48 hours at the start of the season to restore full charge.

DISCARDING OLD BATTERIES:
If you need to purchase a new battery POW-R-PACK, go to your local TORO Service Dealer. He will have the proper battery to fit your mower.

DO NOT DISPOSE OF THE OLD BATTERY IN FIRE AS IT MAY EXPLODE.

ATTENTION: INOPERATIVE STARTER

Should starter gears not engage and prevent engine from rotating, disconnect spark plug wire and remove shroud insert. Turn the cup on the engine COUNTERCLOCKWISE until the gears break free. Replace shroud insert and reconnect spark plug wire. Your mower is now ready to operate.

MOUNTING THE STARTER MOTOR

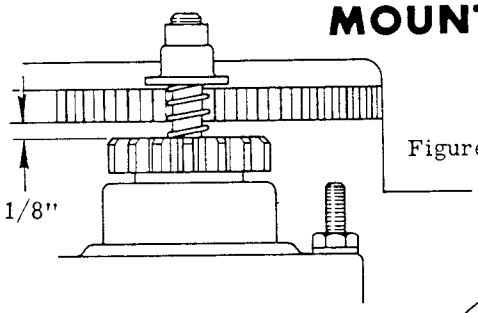

Figure 1

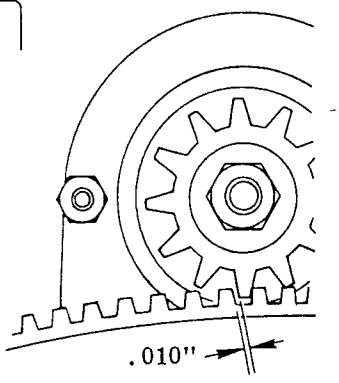

Figure 2

Although mounting the starter motor to the engine is not particularly difficult, we would like to recommend the following instructions:

1. Starter motor should be as near vertical as possible.
2. With Bendix gear disengaged, there should be at least 1/8" CLEARANCE between the upper face of the Bendix gear and the lower face of the flywheel gear (see Figure 1).
3. Rotate the flywheel until the engine is "on compression". With fingers, roll the Bendix gear up the starter shaft and engage flywheel gear. Gear teeth "backlash" at this point should be .010". (See Figure 2)

This procedure will assure proper alignment, correct gear tooth engagement, and eliminate "binding" problems which might otherwise occur.

CARBURETOR ADJUSTMENTS

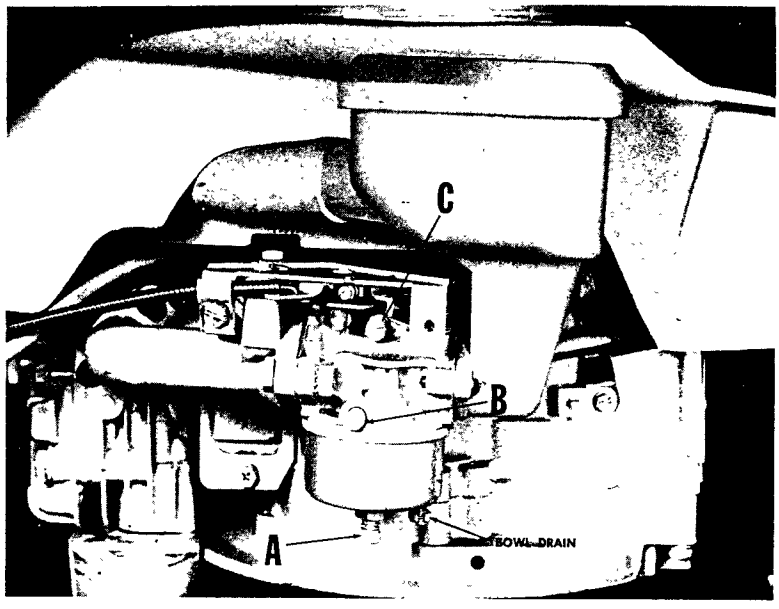

Do not make unnecessary adjustments. Factory settings are correct for most applications. If adjustments are needed, proceed as follows:

CAUTION: DO NOT FORCE-TIGHTEN NEEDLE. PERMANENT DAMAGE MAY RESULT.

1. Close power adjusting needle "A" by turning to right (clockwise). Close finger tight only.
2. Open one turn (counterclockwise).
3. Close idle adjusting needle "B", turning to right (clockwise). Close finger tight only.
4. Open five/eighths (5/8) turn (counterclockwise).
5. Start engine. With throttle open (carburetor control at RUN or FAST position), adjust power adjusting needle one/eighth (1/8) turn at a time, forward or backward until engine runs smoothly. If engine tends to stall under load, enrich mixture slightly (counterclockwise).
6. Hold throttle lever closed or move carburetor control to IDLE or SLOW position and adjust idle adjusting needle until engine runs smoothly, proceeding as in step five (5) above. To obtain idle speed, adjust screw "C".
7. Allow several seconds between each adjustment when performing either step 5 or 6 to allow engine to react to new setting.
8. Maximum engine speeds are preset at factory and should not be changed except by a qualified Toro Service Station repairman who has the necessary equipment.
9. IMPORTANT: Air cleaner should always be checked or cleaned first prior to carburetor adjustments. In many cases a dirty air cleaner results in unnecessary carburetor adjustments. (See below for cleaning air cleaner.)

CLEANING ENGINE AIR CLEANER

To clean, proceed as follows:

1. To remove air cleaner cover, grasp tab and lift off.
2. Remove polyurethane element.
3. Wash in detergent and water solution by squeezing similar to a sponge. Squeeze out cleaning solution and shake dry.
4. Re-oil element by applying a generous quantity (5 teaspoons) of engine oil to sides and open end. Squeeze to distribute oil and to remove excess oil.
5. Re-install the element and air cleaner cover.
6. Dusty conditions may require more frequent cleaning.

STORAGE INSTRUCTIONS

In event engine is to be stored for any length of time (30 days or more) or at the end of mowing season, prepare as follows:

1. Drain by tipping or by syphon hose; then run engine until remainder is used and tank and carburetor are empty.

   CAUTION: Drain into container outdoors away from fire or flame.
2. Drain carburetor. Float bowl carburetors are drained by pressing upward on bowl drain.
3. Inside protection of engine for storage is performed by removing spark plug and pouring one ounce of S.A.E. 30 oil through spark plug hole into cylinder. Crank engine without starting several times to spread oil over cylinder walls. Replace spark plug.

SPECIFICATIONS

ENGINE: LAV35-40534H

ENGINE SHROUD: Rigid polyethylene

FUEL TANK CAPACITY: One quart

CUTTER BLADE: 21'' long. Heat treated. "S" shape, attached to shaft with welded retainer and special 7/16-20 capscrew and lockwasher.

TIP SPEED: 18,700 at 3400 engine rpm; 17,600 at 3200 engine rpm.

TRACTION CLUTCH: Hand operated lever and control wire system mounted on escutcheon plate on upper handle which operates spiral jaw clutch in gear case on drive shaft.

FRONT WHEEL TRACTION DRIVE: Special 3L V-belt, with an approximately 10 degree misalignment, running between 2 pulleys. The steel engine shaft pulley, integral with the blade and hub, has a 2.0 eff. p.d., the powdered iron worm shaft pulley, held with a tolerance ring, has a 2.5 eff. p.d. The engine to gear box reduction is 1.27:1.

GEAR CASE: Die cast aluminum case. Hardened and polished four thread steel worm supported by ball bearing. (6.25:1 red.) Lube requirement 2 oz. SAE 90 with extreme pressure characteristics.

WHEEL REDUCTION: 14T hardened steel pinions on drive shaft supported by double sealed ball bearings to 42T laminated hardened steel external spur gears riveted to wheel (3:1 reduction).

REDUCTION, ENGINE TO WHEELS: 23.8:1

WHEELS: 18 gauge steel disc with oil impregnated metal bushings.

TIRES: Semi-pneumatic 8 x 1.75 Toro tread

GROUND SPEED: 3.20 mph at 3200 engine rpm
3.40 mph at 3400 engine rpm

HEIGHT-OF-CUT: 1'' to 3'' in ½'' increments by moving wheels individually with leaf spring-type hand levers. ½'' at front only.

THROTTLE CONTROL: Control wire and casing. Operating lever mounted to escutcheon plate on upper handle. Stop, run and choke positions. Detented 2 speed control for 2800 and 3300 RPM.

WIDTH OF CUT: 21 inches

HOUSING: Die cast aluminum alloy, spiral grass chamber, right hand discharge. Symmetrical wheel location, hinged chute deflector.

FOLDING HANDLE: ¾'' O.D. x 16 gage welded steel tubing in two separable halves. Chrome plated. No tool, positive 3-position handle height adjustment plus choice of upright or folded storage position.

DIMENSIONS: Width: 24½''
Length: 32½''
Height: 14½''

WEIGHT: 71 lbs. total, 24 lbs. front wheels, 43 lbs. rear wheels. 16 lbs. to lift front wheel at medium handle height.

STANDARD EQUIPMENT: Grass bag assembly; bagging attachment, bag hanger, anti-scalp cup, washout plug, dipstick oil gauge, removable battery box, key switch, battery charger, emergency starter rope, prismatic gas gauge, rear safety shield, below deck muffler.

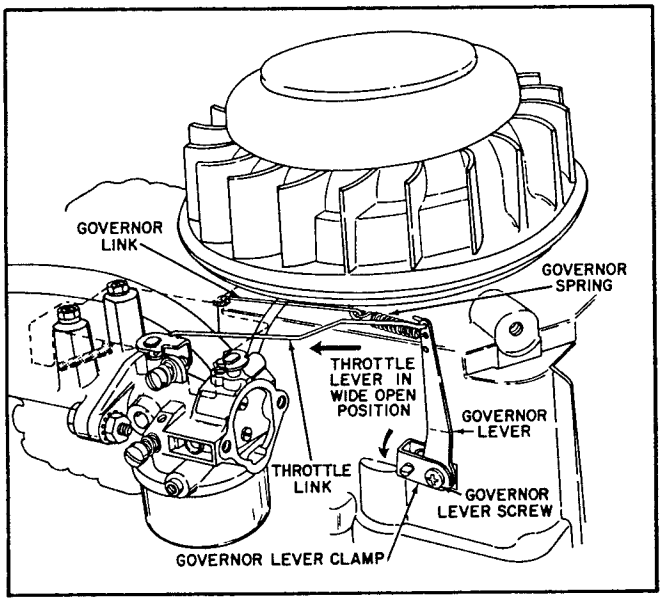

MECHANICAL GOVERNOR ADJUSTMENTS

1. Loosen governor lever screw.
2. Hold throttle lever in wide open position.
3. Rotate governor lever clamp as far as possible in direction shown by arrow.
4. Tighten governor lever screw.

IMPORTANT ORDERING INSTRUCTIONS

Repair parts are available from your TORO dealer. To insure getting correct parts without delay, furnish the following information:

1. Serial number of your mower as shown on name plate.
2. Part number, description and quantity of each part required.
3. State whether parts should be shipped by mail or express. All repair parts are shipped F.O.B. factory.
4. Name and address where parts are to be shipped.
5. Do not order by reference number; use part number only.

FORM NO 331-913

LITHO IN U.S.A.