Form No. 3316–744 Rev B

ProLine 32″ Recycler®

for Mid-Size Traction Unit

Model No. 30133—790001 & Up

Operator’s Manual

Introduction

We want you to be completely satisfied with your new product, so feel free to contact your local Authorized Service Dealer for help with service, genuine replacement parts, or other information you may require.

Whenever you contact your Authorized Service Dealer or the factory, always know the model and serial numbers of your product. These numbers will help the Service Dealer or Service Representative provide exact information about your specific product. You will find the model and serial number plate located in a unique place on the product as shown below.

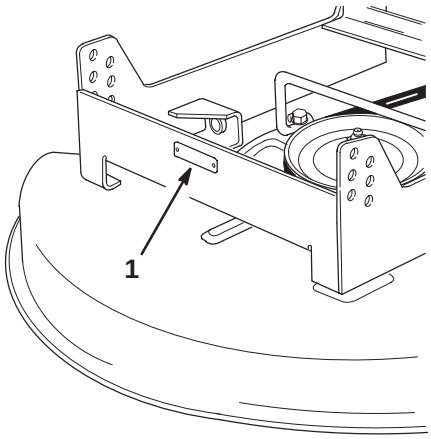

m–2610

1. Model and Serial Number Plate

For your convenience, write the product model and serial numbers in the space below.

Model No: _____

Serial No. _____

The warning system in this manual identifies potential hazards and has special safety messages that help you and others avoid personal injury, even death. DANGER, WARNING and CAUTION are signal words used to identify the level of hazard. However, regardless of the hazard, be extremely careful.

DANGER signals an extreme hazard that will cause serious injury or death if the recommended precautions are not followed.

WARNING signals a hazard that may cause serious injury or death if the recommended precautions are not followed.

CAUTION signals a hazard that may cause minor or moderate injury if the recommended precautions are not followed.

Two other words are also used to highlight information. “Important” calls attention to special mechanical information and “Note” emphasizes general information worthy of special attention.

The left and right side of the machine is determined by sitting on the seat in the normal operator’s position.

Printed in USA

Contents

	Page
Safety and Instruction Decals	2
Installation	3
Loose Parts	3
Installing the Castor Wheels on Traction Units with Serial Number 590000 and Below	4
Installing the Castor Wheels on Traction Units with Serial Number 590001 and Above	4
Installing the Carrier Frame to the Traction Unit	5
Installing the Cutting Deck	5
Installing the Drive Belt	6
Operation	8
Side Discharge or Mulch Grass	8
Engaging the Mower Blades (PTO)	8
Adjusting the Height-of-Cut	9
Tips for Mowing Grass	10

	Page
Maintenance	11
Service Interval Chart	11
Cutting Blade	11
Correcting Cutting Unit Mismatch	14
Greasing the Bearings and Bushings	16
Replacing the Drive Belt	16
Replacing the Castor Wheel Fork Bushings	18
Servicing the Castor Wheels and Bearings	19
Removing the Discharge Cover Assembly for Discharge Mowing	20
Replacing the Grass Deflector	21
Storage	21
Troubleshooting	22

Safety and Instruction Decals

Safety decals and instructions are easily visible to the operator and are located near any area of potential danger. Replace any decal that is damaged or lost.

See Traction Unit Operator's Manual for Glossary of Safety Symbols

ON LEFT FRONT OF CUTTING UNIT (Part No. 66−1340)



UNDERNEATH DEFLECTOR (Part No. 66−6380)



ON DEFLECTOR (Part No. 54−9220)



RIGHT SIDE OF DECK COVER (Part No. 54−0910)



ON LEFT SIDE OF CUTTING UNIT (Part No. 66−1330)

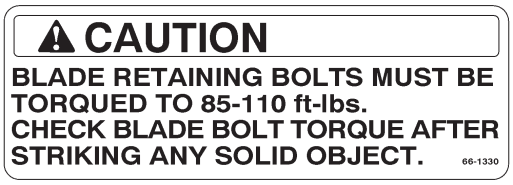

UNDERNEATH DECK COVER (Part No. 67−5360)



ON LEFT SIDE OF CUTTING UNIT (Part No. 93−1159 - 2"−5" HOC) (Part No. 42−6860 - 1"−4" HOC)

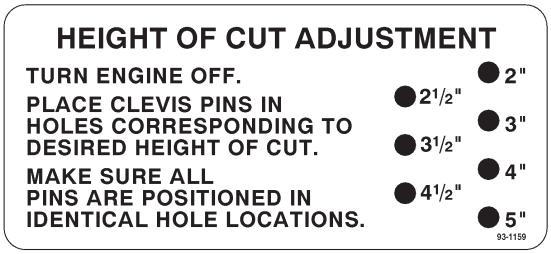

Installation

Loose Parts

Note: Use the chart below to identify parts used for assembly.

DESCRIPTION	QTY.	USE
Castor Wheel Assembly	2	Install castor wheels to carrier frame
Thrust Washer	4	
Spacer	2	
Retaining Ring	2	
Carrier Frame	1	Install carrier frame to traction unit
Flange Screw, 1/2”-13 x 1” (25 mm)	6	
Flange Locknut, 1/2”-13	6	
Adjusting Shaft	2	Install adjusting shafts
Jam Nut, 1/2”-13	4	
Flat Washer, 1/2” (13 mm)	2	
Spring	2	
Bushing	2	
Support Rod	2	Install cutting unit to carrier frame
Hairpin Cotter	4	
Operator’s Manual	1	Read before operating
Parts Catalog	1	Ordering parts
1”–4” Height-of-cut Decal	1	Install over 2”–5” Height-of-cut Decal (for Traction Units with serial number 590000 and below only)

Installing the Castor Wheels on Traction Units with Serial Number 590000 and Below

1. Place two (2) thrust washers onto the castor wheel fork (Fig. 1).
2. Insert the castor wheel fork into the carrier frame mounting tube (Fig. 1).
3. Install the spacer onto the castor wheel fork, then secure with a retaining ring (Fig. 1).

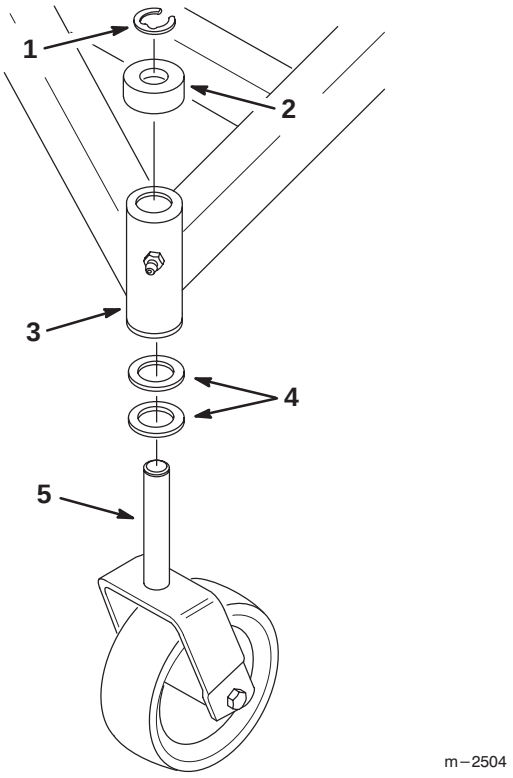

Figure 1

1. Retaining Ring
2. Spacer
3. Carrier Frame Mounting Tube
4. Thrust Washers
5. Castor Wheel Fork

4. Install the 1”–4” Height-of-cut decal over the existing 2”–5” Height-of-cut decal.

Installing the Castor Wheels on Traction Units with Serial Number 590001 and Above

1. Place one (1) thrust washer and the spacer onto the castor wheel fork (Fig. 2).
2. Insert the castor wheel fork into the carrier frame mounting tube (Fig. 2).
3. Install the second thrust washer onto the castor wheel fork, then secure with a retaining ring (Fig. 2).

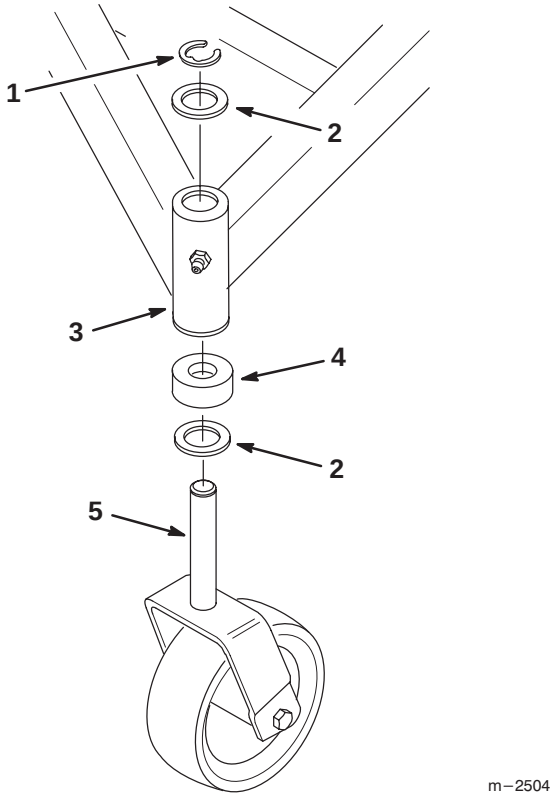

Figure 2

1. Retaining Ring
2. Thrust Washer
3. Carrier Frame Mounting Tube
4. Spacer
5. Castor Wheel Fork

Installing the Carrier Frame to the Traction Unit

1. Align the carrier frame holes with the mounting holes in the traction unit frame (Fig. 3).
2. Fasten each side of the carrier frame to the traction unit with three (3) 1/2”-13 x 1” (25 mm) flange screws and locknuts. Torque the mounting screws to 60–80 ft-lb (81–109 N•m) (Fig. 3).

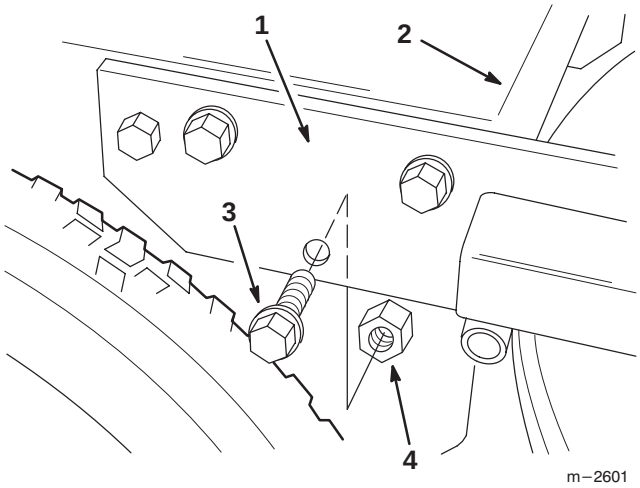

Figure 3

1. Carrier Frame
2. Traction Unit Frame
3. 1/2”-13 x 1” (25 mm) Flange Screw (3)
4. 1/2”-13 Flange Locknut (3)

Installing the Cutting Deck

1. Position the cutting deck under the carrier frame.
2. Mount the cutting deck to the carrier frame with the two (2) support rods and hairpin cotters (Fig. 4).

   Note: Both support rods must be in the same hole locations to prevent uneven cutting.

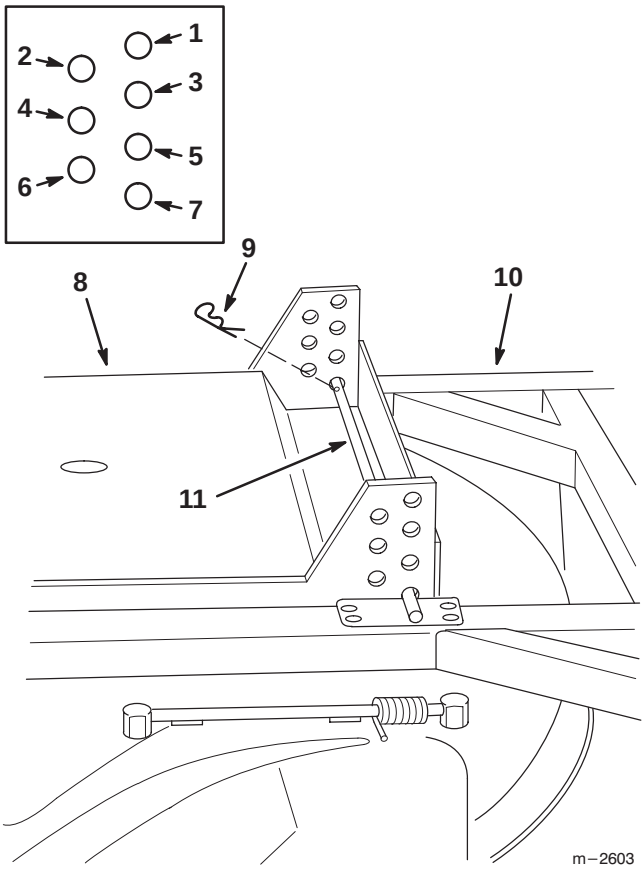

Figure 4

1. 1” or 2” (25 or 51 mm) Height-of-Cut (HOC)
2. 1-1/2” or 2-1/2” (38 or 64 mm) HOC
3. 2” or 3” (51 or 76 mm) HOC
4. 2-1/2” or 3-1/2” (64 or 89 mm) HOC
5. 3” or 4” (76 or 102 mm) HOC
6. 3-1/2” or 4-1/2” (89 or 114 mm) HOC
7. 4” or 5” (102 or 127 mm) HOC
8. Cutting Deck
9. Hairpin Cotter
10. Carrier Frame
11. Support Rod

Installing the Drive Belt

1. Loosen the hand knob holding the deck cover to the top of the cutting unit and remove the deck cover (Fig. 5).
2. Remove the two hex head flange screws holding the belt guide to the top of the deck and remove the belt guide (Fig. 5).
3. Install the drive belt around the spindle pulley and the drive pulley on the traction unit (Fig. 5).
4. Position the belt guide on the deck with the formed loops toward the rear of the deck to position the belt guide close to the spindle pulley (Fig. 5).
5. Reinstall and tighten the two hex head flange screws to fasten the belt guide to the deck (Fig. 5).

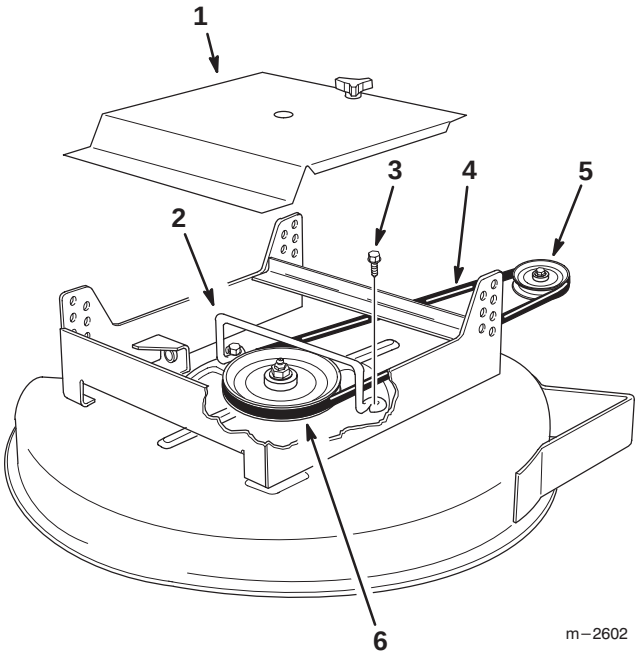

Figure 5

1. Deck Cover
2. Belt Guide
3. Hex Head Flange Screw (2)
4. Drive Belt
5. Traction Unit Drive Pulley
6. Spindle Pulley

6. Thread two (2) 1/2” jam nuts approximately 7” (18 cm) up on each adjusting shaft (Fig. 6).
7. Slide a 1/2” washer, spring and bushing onto each adjusting shaft. Make sure to install the bushing with the flange end against the spring (Fig. 6).

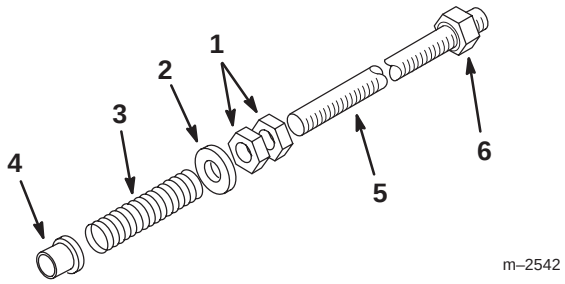

Figure 6

1. 1/2” Jam Nut (2)
2. 1/2” Washer
3. Spring
4. Bushing
5. Adjusting Shaft
6. Locknut (already installed on Adjusting Shaft)

8. Insert the spring end of the adjusting shaft into the hole in the deck mounting bracket. Note that the small end of the bushing fits into the hole in the deck bracket. Insert the locknut end of the adjusting shaft into the carrier frame mounting tab (Fig. 7).

9. To tension the belt, tighten the front jam nut on each adjusting shaft until the springs are completely compressed (approximately 4-3/4" or 12 cm, measured between the washer and the bushing), then back the front jam nuts off one turn (Fig. 7).

IMPORTANT: Don't overtighten the jam nuts after the springs are fully compressed, as this can damage the drive belt (Fig. 7).

10. Tighten the rear jam nuts (Fig. 7).

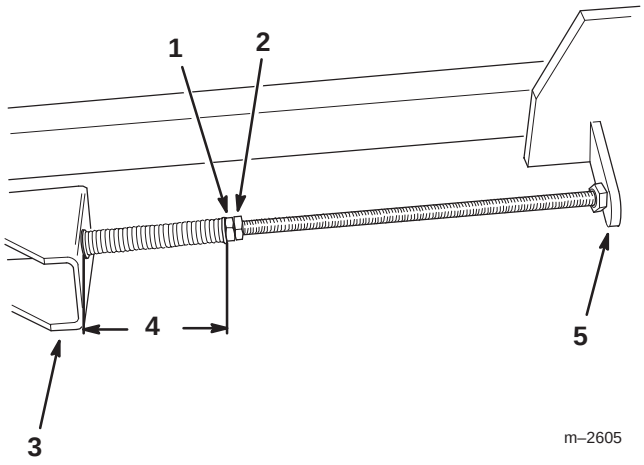

Figure 7

1. Front Jam Nut
2. Rear Jam Nut
3. Deck Mounting Bracket
4. 4-3/4" (12 cm) between the Washer and Bushing, minus one turn
5. Carrier Frame Mounting Tab

11. Reinstall the deck cover onto the deck, then tighten the hand knob (Fig. 5).

Operation

Side Discharge or Mulch Grass

The mower has a hinged grass deflector that disperses clippings to the side and down toward the turf.

⚠ DANGER

POTENTIAL HAZARD

- **Without the grass deflector or complete grass catcher assembly mounted in place, you and others are exposed to blade contact and thrown debris.**

WHAT CAN HAPPEN

- **Contact with rotating mower blade(s) and thrown debris will cause injury or death.**

HOW TO AVOID THE HAZARD

- **NEVER remove the grass deflector from the mower because the grass deflector routes material down toward the turf. If the grass deflector is ever damaged, replace it immediately.**
- **Never put your hands or feet under the mower.**
- **Never try to clear discharge area or mower blade unless you move the power take-off (PTO) to "OFF" and rotate the ignition key to "OFF." Also remove the key and pull the wire(s) off the spark plug(s).**

Engaging the Mower Blade (PTO)

The blade control switch (PTO) in conjunction with the blade control bail engages and disengages power to the electric clutch and mower blade.

1. Pull on the upper control bar to stop the machine (Fig. 8).

2. To engage the blade, squeeze the blade control bail against the upper control bar.

3. Press the blade control rocker switch forward to "ON". Hold the blade control bail against the control bar while operating.

Note: Repeat the procedure to engage the mower blade if the blade control bail is released.

4. To disengage the blade, release the blade control bail, or push the blade control switch to the "OFF" position.

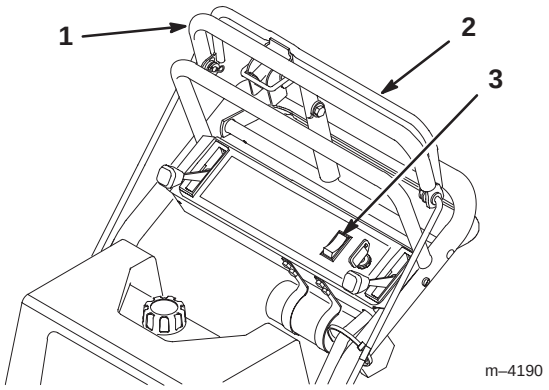

Figure 8

1. Upper Control Bar
2. Blade Control Bail
3. Blade Control Switch (PTO)

Adjusting the Height-of-Cut

The height-of-cut is adjustable from 1” to 4” (26 to 102 mm), or 2” to 5” (51 to 127 mm) depending on the serial number of the traction unit to which the deck is attached. The height-of-cut is adjustable in 1/2-inch (13 mm) increments by removing the hairpin cotters, then relocating the support rods in different hole locations in the brackets at each corner of the cutting unit (Fig. 4).

Stop the engine before adjusting the height-of-cut.

Note: Both support rods must be in the same hole location for even cutting.

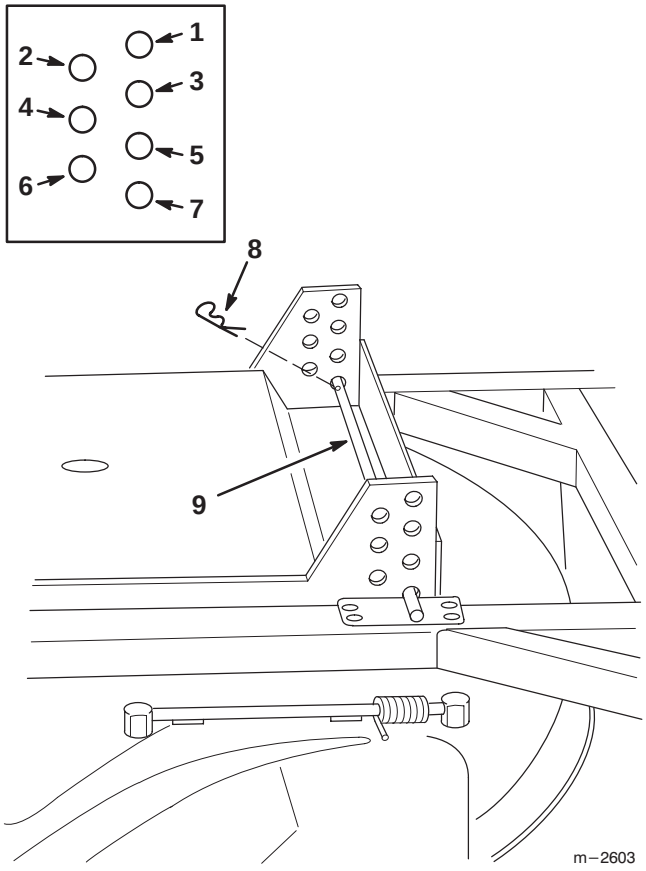

Figure 9

1. 1” or 2” (25 or 51 mm) Height-of-Cut (HOC)
2. 1-1/2” or 2-1/2” (38 or 64 mm) HOC
3. 2” or 3” (51 or 76 mm) HOC
4. 2-1/2” or 3-1/2” (64 or 89 mm) HOC
5. 3” or 4” (76 or 102 mm) HOC
6. 3-1/2” or 4-1/2” (89 or 114 mm) HOC
7. 4” or 5” (102 or 127 mm) HOC
8. Hairpin Cotter
9. Support Rod

Tips for Mowing Grass

Fast Throttle Setting

For best mowing and maximum air circulation, operate the engine at “FAST.” Air is required to thoroughly cut grass clippings, so do not set the height-of-cut so low as to totally surround the mower by uncut grass. Always try to have one side of the mower free from uncut grass, which allows air to be drawn into the mower.

Cutting a Lawn for the First Time

Cut grass slightly longer than normal to ensure the cutting height of the mower does not scalp any uneven ground. However, the cutting height used in the past is generally the best one to use. When cutting grass longer than six inches tall, you may want to cut the lawn twice to ensure an acceptable quality of cut.

Cut 1/3 of the Grass Blade

It is best to cut only about 1/3 of the grass blade. Cutting more than that is not recommended unless grass is sparse, or it is late fall when grass grows more slowly.

Mowing Direction

Alternate mowing direction to keep the grass standing straight. This also helps disperse clippings which enhances decomposition and fertilization.

Mow at Correct Intervals

Normally, mow every four days. But remember, grass grows at different rates at different times. So to maintain the same cutting height, which is a good practice, mow more often in early spring. As the grass growth rate slows in mid summer, mow less frequently. If you cannot mow for an extended period, first mow at a high cutting height; then mow again two days later at a lower height setting.

Cutting Speed

To improve cut quality, use a slower ground speed.

Avoid Cutting Too Low

If the cutting width of the mower is wider than the mower you previously used, raise the cutting height to ensure that uneven turf is not cut too short.

Long Grass

If the grass is ever allowed to grow slightly longer than normal, or if it contains a high degree of moisture, raise the cutting height higher than usual and cut the grass at this setting. Then cut the grass again using the lower, normal setting.

When Stopping

If the machine’s forward motion must be stopped while mowing, a clump of grass clippings may drop onto your lawn. To avoid this, move onto a previously cut area with the blade “ENGAGED”.

Keep the Underside of the Mower Clean

Clean clippings and dirt from the underside of the mower after each use. If grass and dirt build up inside the mower, cutting quality will eventually become unsatisfactory.

Blade Maintenance

Maintain a sharp blade throughout the cutting season because a sharp blade cuts cleanly without tearing or shredding the grass blades. Tearing and shredding turns grass brown at the edges, which slows growth and increases the chance of disease. Check the cutter blade daily for sharpness, and for any wear or damage. File down any nicks and sharpen the blade as necessary. If a blade is damaged or worn, replace it immediately with a genuine TORO replacement blade.

Maintenance

Service Interval Chart

Service Operation	Each Use	8 Hours	25 Hours	Storage Service	Notes
Cutting Blade – check		X		X	
Drive Belt – check for wear/cracks				X	
Blade Spindle Bearing – grease		X			
Castor Wheels – grease			X		
Mower Housing – clean	X	X		X	
Chipped Surfaces – paint				X	

Cutting Blade

To ensure a superior quality of cut, keep the blade sharp. For convenient sharpening and replacement, you may want to keep extra blades on hand.

⚠ WARNING

POTENTIAL HAZARD

- **A blade that is worn or damaged could break apart and pieces could be thrown at bystanders or at you as you use the mower.**

WHAT CAN HAPPEN

- **Pieces of blade that may be thrown could seriously injure or kill you or bystanders.**

HOW TO AVOID THE HAZARD

- **Periodically inspect the blade for wear and damage. Immediately install a new blade if it is worn or damaged.**

Before Inspecting or Servicing the Blade

Park the machine on a level surface, disengage the blade control (PTO) and set the parking brake. Turn the ignition key to “OFF” to stop the engine. Remove the key and disconnect the spark plug wire(s) from the spark plug(s).

Inspecting the Blade

1. Inspect the cutting edges (Fig 10). If the edges are not sharp or have nicks, remove and sharpen the blade. Refer to Sharpening the Blade on page 13.

2. Inspect the blade, especially the curved area (Fig. 10). If you notice any damage, wear, or a slot forming in this area (item 3 in Fig. 10), immediately install a new blade.

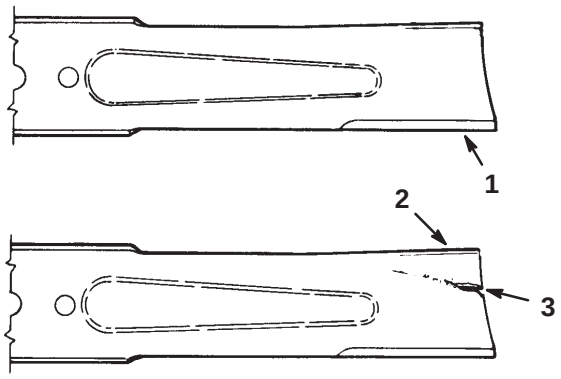

m–151

Figure 10

1. Cutting Edge
2. Curved Area
3. Wear/slot Forming

Checking for a Bent Blade

1. Rotate the blade until the ends face forward and backward (Fig. 11). Measure at the “C” location from a level surface to the cutting edge of the blade (Fig. 12). Note this dimension.

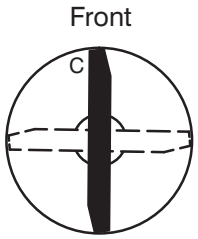

m–2616

Figure 11

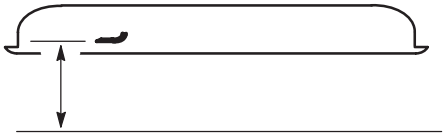

MEASURE FROM CUTTING EDGE TO A LEVEL SURFACE

m–2617

Figure 12

2. Rotate the opposite end of the blade forward. Measure from a level surface to the cutting edge of the blade at the same position as in step 1 above. The difference between the dimensions obtained in steps 1 and 2 must not exceed 1/8” (3 mm). If this dimension exceeds 1/8” (3 mm), the blade is bent and must be replaced. Refer to Removing the Blade, and Installing the Blade on page 13.

⚠ WARNING

POTENTIAL HAZARD

- **A blade that is bent or damaged could break apart and pieces could be thrown at bystanders or at you as you use the mower.**

WHAT CAN HAPPEN

- **Pieces of blade that may be thrown could seriously injure or kill you or bystanders.**

HOW TO AVOID THE HAZARD

- **Always replace bent or damaged blade with a new blade.**
- **Never file or create sharp notches in the edges or surfaces of blade.**

Removing the Blade

The blade must be replaced if a solid object is hit, if the blade is out of balance or is bent. To ensure optimum performance and continued safety conformance of the machine, use genuine TORO replacement blades. Replacement blades made by other manufacturers may result in non-conformance with safety standards.

Hold the blade end using a rag or thickly-padded glove. Remove the blade bolt, lock washer, anti-scalp cup, blade and spacer from the spindle shaft (Fig. 13).

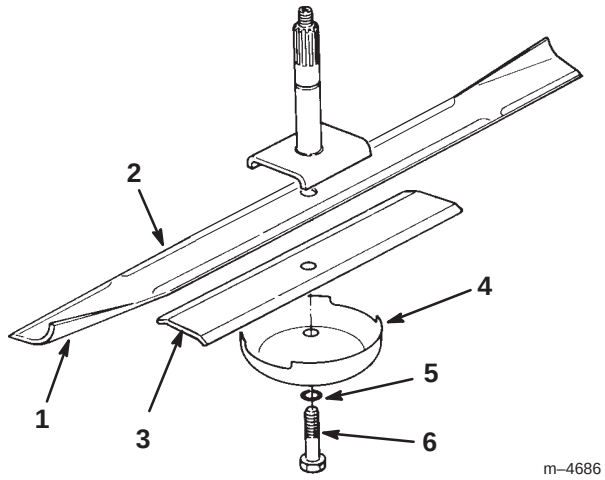

Figure 13

1. Sail Area of Blade
2. Blade
3. Spacer
4. Anti-scalp Cup
5. Lock Washer
6. Blade Bolt

Sharpening the Blade

1. Use a file to sharpen the cutting edge at both ends of the blade (Fig. 14). Maintain the original angle. The blade retains its balance if the same amount of material is removed from both cutting edges.

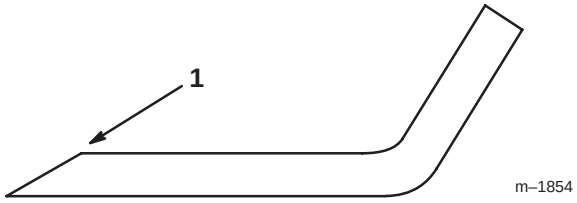

Figure 14

1. Sharpen at original angle

2. Check the balance of the blade by putting it on a blade balancer (Fig. 15). If the blade stays in a horizontal position, the blade is balanced and can be used. If the blade is not balanced, file some metal off the end of the sail area only (Fig. 13). Repeat this procedure until the blade is balanced.

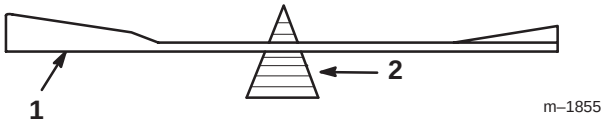

Figure 15

1. Blade
2. Balancer

Installing the Blade

1. Install the spacer and blade onto the spindle shaft (Fig. 13).

IMPORTANT: The curved part of the blade must be pointing upward toward the inside of the mower to ensure proper cutting.

2. Install the anti-scalp cup, lock washer and blade bolt (Fig. 13). Torque the blade bolt to 85–110 ft-lb (115–149 N•m).

Correcting Cutting Unit Mismatch

If one side of the cutter blade cuts lower than the other, correct as follows:

1. Stop the engine, remove the key and disconnect the spark plug wire(s) from the spark plug(s).
2. Adjust the tire pressure in the traction unit tires to specifications and check that the blades are not bent. Refer to Checking for a Bent Blade on page 12.
3. Set the height-of-cut to the 2-1/2” position. Refer to Adjusting the Height-Of-Cut in the Operation section. Make sure the support rods are resting on the frame cushions.

Setting the Front-to-Rear Pitch

1. Check the traction unit tire pressures.
2. Position the blade front-to-rear (Fig. 16). Measure at “C” and “D” locations (Fig. 16) from a level surface to the cutting edge of the blades (Fig. 17).
3. The mower should be 1/8”–5/8” (3–16 mm) lower in front “C” than in the rear “D”.

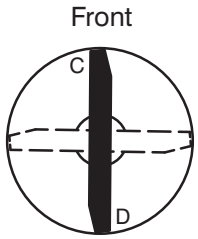

m–2616

Figure 16

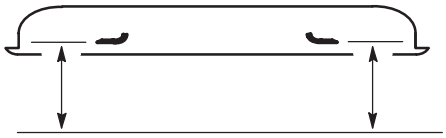

MEASURE FROM CUTTING EDGE TO A LEVEL SURFACE

m–2619

Figure 17

4. To change the front-to-rear pitch, move an equal number of thrust washers on both castor wheel forks. Move the thrust washers from the top of the carrier frame mounting tube to the bottom to raise the front of the mower. Move the thrust washers from the bottom of the mounting tube to the top to lower the front of the mower. (Fig. 18).

5. Check the side-to-side leveling of the cutting unit.

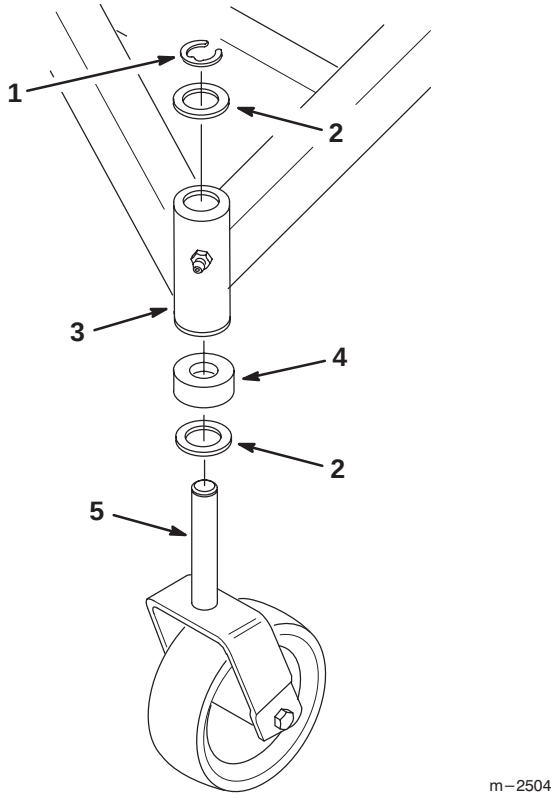

m–2504

Figure 18

1. Retaining Ring
2. Thrust Washer (locate as required)
3. Carrier Frame Mounting Tube
4. Spacer
5. Castor Wheel Fork

Setting the Side-to-Side Leveling

1. Check the traction unit tire pressures.

2. Position the blade side-to-side (Fig. 19). Measure at “A” and “B” locations (Fig. 19) from a level surface to the cutting edges of the blade (Fig. 20).

3. The difference between measurements “A” and “B” should be no more than 1/4” (6 mm).

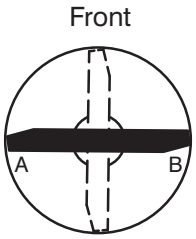

m–2620

Figure 19

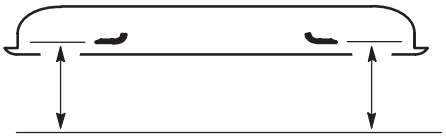

MEASURE FROM CUTTING EDGE TO A LEVEL SURFACE

m–2619

Figure 20

4. To change the side-to-side leveling, move the thrust washers on one castor wheel fork only. Move the thrust washer(s) from the top of the carrier frame mounting tube to the bottom to raise the corresponding side of the mower. Move the thrust washer(s) from the bottom of the mounting tube to the top to lower the corresponding side of the mower. (Fig. 18).

5. Recheck the front-to-rear pitch of the cutting unit.

Greasing the Bearings and Bushings

The cutting unit must be lubricated regularly. Refer to the Service Interval Chart on page 11. Grease with No. 2 general purpose lithium base or molybdenum base grease.

1. Stop the engine, remove the key and disconnect the spark plug wire(s) from the spark plug(s).
2. Grease the fitting on the spindle pulley bearing (Fig. 5).

   Note: You can access the spindle grease fitting through the hole in the mower deck cover.
3. Grease the fittings on the carrier frame mounting tubes and castor wheels (Fig. 21).

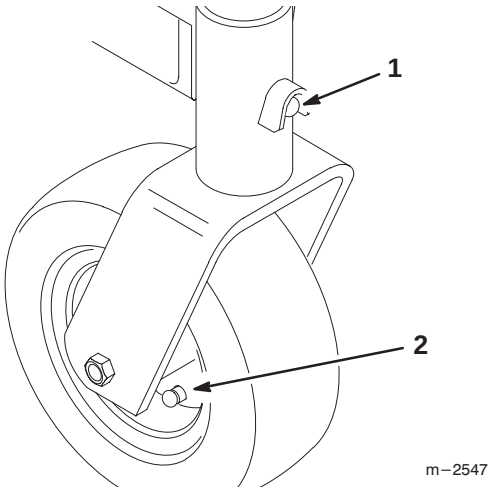

Figure 21

1. Carrier Frame Mounting Tube Grease Fitting
2. Castor Wheel Grease Fitting

Replacing the Drive Belt

Squealing when the belt is rotating, the blade slipping when cutting grass, frayed belt edges, burn marks and cracks are signs of a worn drive belt. Replace the drive belt if any of these conditions are evident.

1. Stop the engine, remove the key and disconnect the spark plug wire(s) from the spark plug(s).
2. Loosen the hand knob holding the deck cover to the top of the cutting unit and remove the deck cover (Fig. 5).
3. Remove the two hex head flange screws holding the belt guide to the top of the deck and remove the belt guide (Fig. 5).

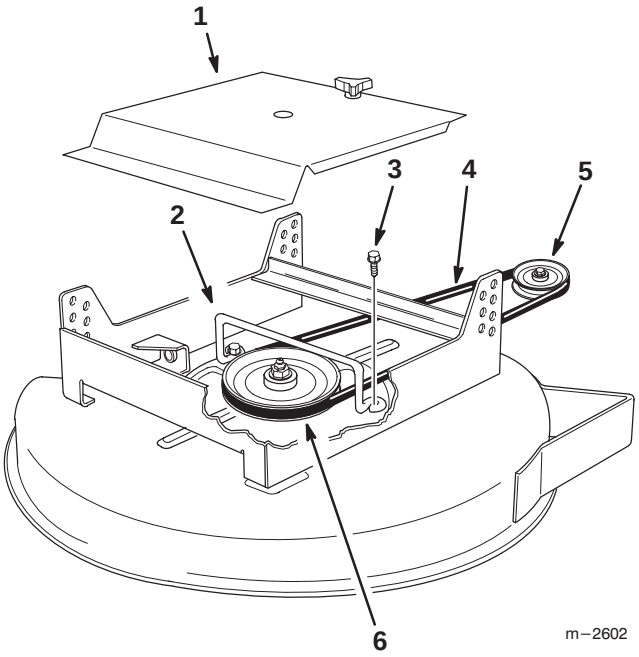

Figure 22

1. Deck Cover
2. Belt Guide
3. Hex Head Flange Screw (2)
4. Drive Belt
5. Traction Unit Drive Pulley
6. Spindle Pulley

4. Loosen the jam nuts on the adjusting shafts to relieve the tension on the drive belt, then remove the worn drive belt from the pulleys (Fig. 7).

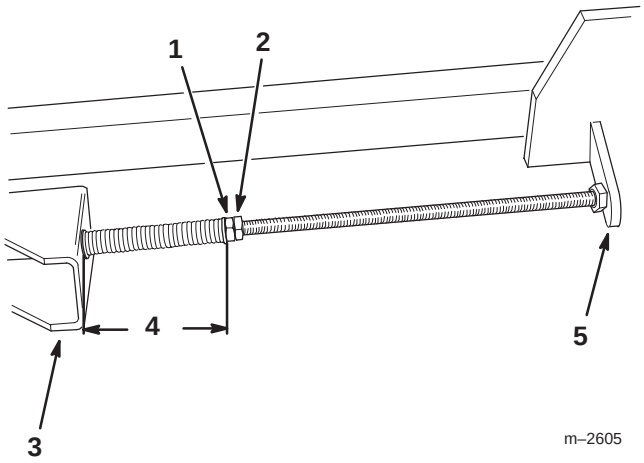

Figure 23

1. Front Jam Nut
2. Rear Jam Nut
3. Deck Mounting Bracket
4. 4-3/4" (12 cm) between the Washer and Bushing, minus one turn
5. Carrier Frame Mounting Tab

5. Install the replacement drive belt around the drive pulley on the traction unit and the spindle pulley (Fig. 5).

6. Reinstall the belt guide on the deck with the two hex head flange screws. Make sure the formed loops face toward the rear of the deck (Fig. 5).

7. Tighten the front jam nut on each adjusting shaft until the springs are completely compressed (approximately 4-3/4" or 12 cm, measured between the washer and the bushing), then back the front jam nuts off one turn (Fig. 7).

IMPORTANT: Don't overtighten the jam nuts after the springs are fully compressed, as this can damage the drive belt (Fig. 7).

8. Tighten the rear jam nuts (Fig. 7).

9. Reinstall the deck cover onto the cutting unit, then tighten the hand knob (Fig. 5).

Replacing the Castor Wheel Fork Bushings

The castor wheel forks are mounted in bushings pressed into the top and bottom of the carrier frame mounting tubes. To check the bushings, move the castor forks back and forth and side-to-side. If a castor fork is loose, the bushings are worn and must be replaced.

1. Raise the cutting unit so the castor wheels are off the floor, then block up the front of the mower with jack stands.

2. Remove the retaining ring and thrust washer(s) from the top of the castor wheel fork (Fig. 2).

3. Pull the castor wheel fork out of the mounting tube, leaving the spacer and thrust washer(s) on the bottom of the fork. Remember the location of the thrust washers and spacer on each fork to ensure correct installation, and to maintain a level deck.

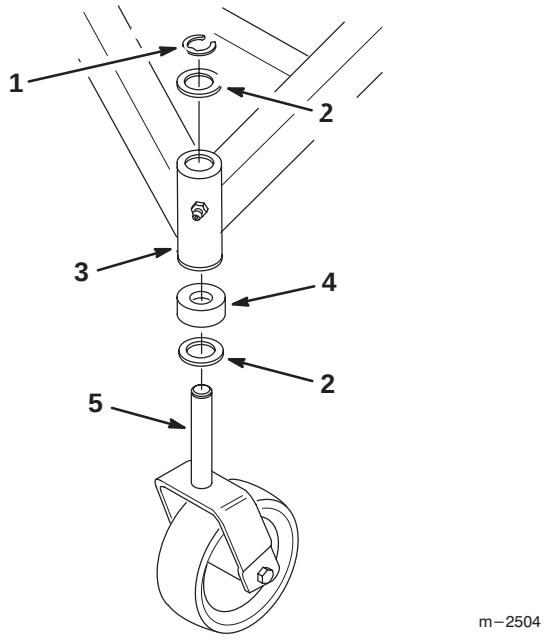

Figure 24

1. Retaining Ring
2. Thrust Washer
3. Carrier Frame Mounting Tube
4. Spacer
5. Castor Wheel Fork

4. Insert a pin punch into the mounting tube and carefully drive out the bushings (Fig. 25). Clean the inside of the mounting tube.

5. Grease the inside and outside of the new bushings. Use a hammer and flat plate and carefully drive the bushings into the mounting tube.

6. Inspect the castor wheel forks for wear and replace if necessary (Fig. 2).

7. Slide the castor wheel fork through the bushings in the mounting tube. Replace the thrust washer(s) onto the fork and secure with the retaining ring (Fig 2).

IMPORTANT: The inside diameter of the bushings may collapse slightly when installed. If the castor wheel fork does not slide into the new bushings, ream both bushings to an inside diameter of 1.126 in. (28.6 mm).

8. Grease the fitting on the carrier frame mounting tube using No. 2 general purpose lithium base or molybdenum base grease.

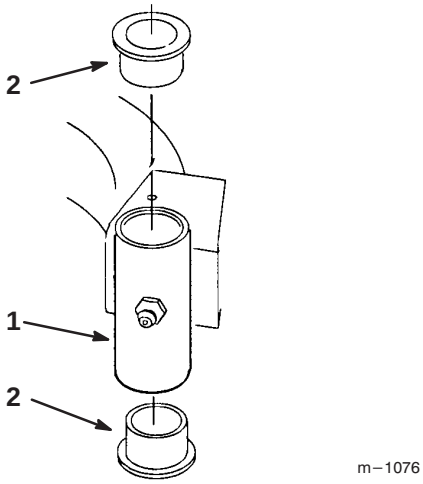

Figure 25

1. Carrier Frame Mounting Tube
2. Bushing

Servicing the Castor Wheels and Bearings

The castor wheels rotate on a roller bearing supported by a spanner bushing. If the bearing is kept well lubricated, wear will be minimal. Failure to keep the bearing well lubricated will cause rapid wear. A wobbly castor wheel usually indicates a worn bearing.

1. Remove the locknut and wheel bolt holding the castor wheel to the castor fork (Fig. 26).

2. Remove the wheel spacers and bushings, then pull the spanner bushing and roller bearing out of the wheel hub (Fig. 26).

3. Clean any grease and dirt from the wheel hub (Fig. 26).

4. Inspect the roller bearing, bushings, spanner bushing and inside of the wheel hub for wear. Replace any defective or worn parts (Fig. 26).

5. To assemble, place one (1) bushing into the wheel hub. Grease the roller bearing and spanner bushing and slide them into the wheel hub. Place the second bushing into the wheel hub (Fig. 26).

6. Install the wheel spacers on the outside of the bushings, then install the castor wheel into the castor fork.

7. Secure the castor wheel to the castor fork with the wheel bolt and locknut. Tighten the locknut until the spanner bushing bottoms against the inside of the castor fork (Fig. 26).

8. Grease the fitting on the castor wheel.

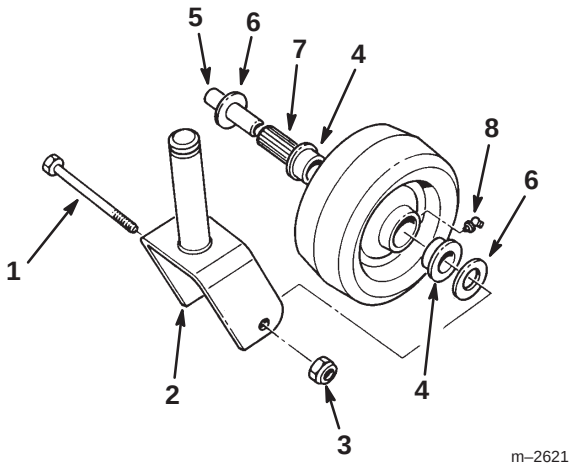

Figure 26

1. Wheel Bolt
2. Castor Fork
3. Locknut
4. Bushing
5. Spanner Bushing
6. Wheel Spacer
7. Roller Bearing
8. Grease Fitting

Removing the Discharge Cover Assembly for Discharge Mowing

⚠ DANGER

POTENTIAL HAZARD
- **Without the grass deflector or complete grass catcher assembly mounted in place, you and others are exposed to blade contact and thrown debris.**

WHAT CAN HAPPEN
- **Contact with rotating mower blade(s) and thrown debris will cause injury or death.**

HOW TO AVOID THE HAZARD
- **NEVER remove the grass deflector from the mower because the grass deflector routes material down toward the turf. If the grass deflector is ever damaged, replace it immediately.**
- **Never put your hands or feet under the mower.**
- **Never try to clear discharge area or mower blades unless you move the power take-off (PTO) to "OFF" and rotate the ignition key to "OFF." Also remove the key and pull the wire(s) off the spark plug(s).**

1. Thoroughly clean the mower.

2. Raise the grass deflector and remove the chute pin on the front of the discharge cover (Fig. 27).

3. Remove the locknut, flat washer and 5/16"-18 x 1-1/4" (32 mm) hex head bolt holding the top of the discharge cover to the top of the deck (Fig. 27).

4. Remove the locknut, flat washer and 5/16"-18 x 2-1/4" (57 mm) hex head bolt holding the loop on the rear of the discharge cover to the deck ring (Fig. 27).

5. Remove the discharge cover from the deck (Fig. 27).

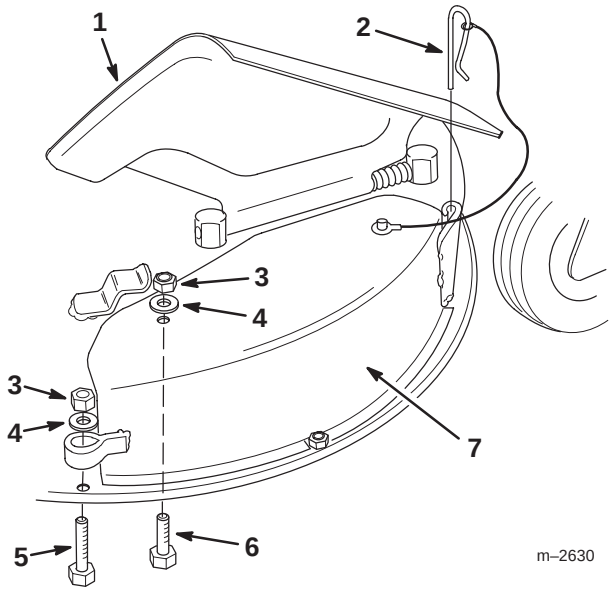

Figure 27

1. Grass Deflector
2. Chute Pin
3. 5/16" Locknut
4. Flat Washer
5. 5/16"-18 x 2-1/4" (57 mm) Hex Head Bolt
6. 5/16"-18 x 1-1/4" (32 mm) Hex Head Bolt
7. Discharge Cover

⚠ DANGER

POTENTIAL HAZARD
- **Open holes in the mower expose you and others to thrown debris.**

WHAT CAN HAPPEN
- **Debris thrown out of holes in the mower can cause injury.**

HOW TO AVOID THE HAZARD
- **Never operate mower without hardware mounted in all holes in mower.**
- **Install hardware in all open mounting holes when discharge cover is removed.**

6. Reinstall the 5/16"-18 x 1-1/4" (32 mm) hex head bolt, flat washer and locknut removed in step 3 into the open hole in the top of the deck for safety.

Replacing the Grass Deflector

1. Remove the locknut holding the rear deflector pivot post to the deck and remove the rear pivot post (Fig. 28).
2. Remove the deflector assembly from the front (fixed) deflector pivot post and remove the deflector assembly from the deck (Fig. 28).
3. Install the spring onto the replacement deflector assembly, then install the deflector assembly into the front deflector pivot post.
4. Make sure the free end of the spring is positioned correctly on the top of the deck, then install the rear end of the deflector assembly into the rear deflector pivot post.
5. Reinstall the rear deflector pivot post onto the deck and tighten the locknut (Fig. 28).

   IMPORTANT: The grass deflector must be spring-loaded in the down position. Lift the deflector up to test that it snaps to the full down position.

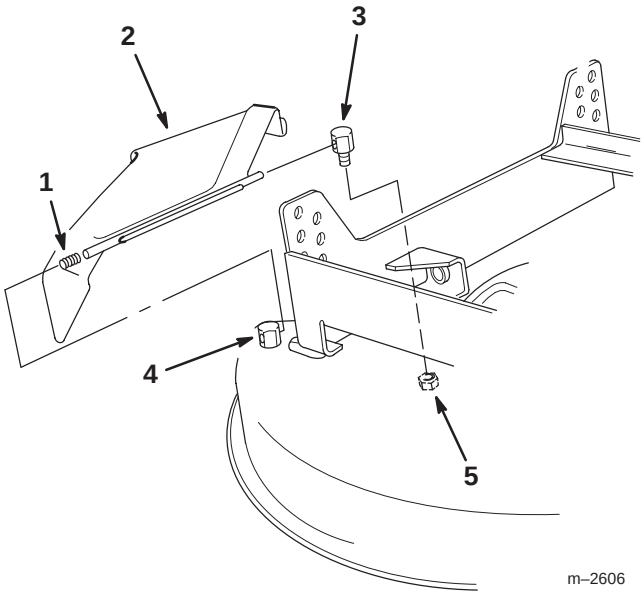

Figure 28

1. Spring
2. Deflector Assembly
3. Rear Deflector Pivot Post
4. Front Deflector Pivot Post
5. Locknut

Storage

1. Clean any dirt and chaff from the top of the mower.
2. Scrape any heavy buildup of grass and dirt from the underside of the mower, then wash the mower with a garden hose.
3. Check the condition of the blade. Refer to Cutting Blade on page 11.
4. Check the condition of the drive belt.
5. Check and tighten all bolts, nuts and screws. Repair or replace any part that is damaged or defective.
6. Paint all scratched or bare metal surfaces. Paint is available from your Authorized Service Dealer.
7. Store the machine in a clean, dry garage or storage area. Cover the machine to protect it and keep it clean.

Troubleshooting

PROBLEM	POSSIBLE CAUSES	CORRECTIVE ACTION
Abnormal vibration.	1. Cutting blade is bent or unbalanced.	1. Install new cutting blade.
	2. Blade mounting bolt is loose.	2. Tighten blade mounting bolt.
	3. Engine mounting bolts are loose.	3. Tighten engine mounting bolts.
	4. Loose engine or spindle pulley.	4. Tighten the appropriate pulley.
	5. Engine pulley is damaged.	5. Contact Authorized Service Dealer.
	6. Blade spindle bent.	6. Contact Authorized Service Dealer.
Uneven cutting height.	1. Blade is not sharp.	1. Sharpen blade.
	2. Cutting blade is bent.	2. Install new cutting blade.
	3. Mower is not level.	3. Level mower from side-to-side and front-to-rear.
	4. Underside of mower is dirty.	4. Clean the underside of the mower.
	5. Traction unit tire pressure is incorrect.	5. Adjust tire pressure.
	6. Blade spindle bent.	6. Contact Authorized Service Dealer.
Blade does not rotate.	1. Drive belt is worn, loose or broken.	1. Install new drive belt.
	2. Drive belt is off pulley.	2. Install drive belt and check adjusting shafts and belt guide for correct position.