Form No. 3323–967

TORO®

Model N0. 30555–200000001 and Up

PARTS CATALOG

52” SIDE–DISCHARGE CUTTING UNIT
FOR GROUNDSMASTER® 200 SERIES

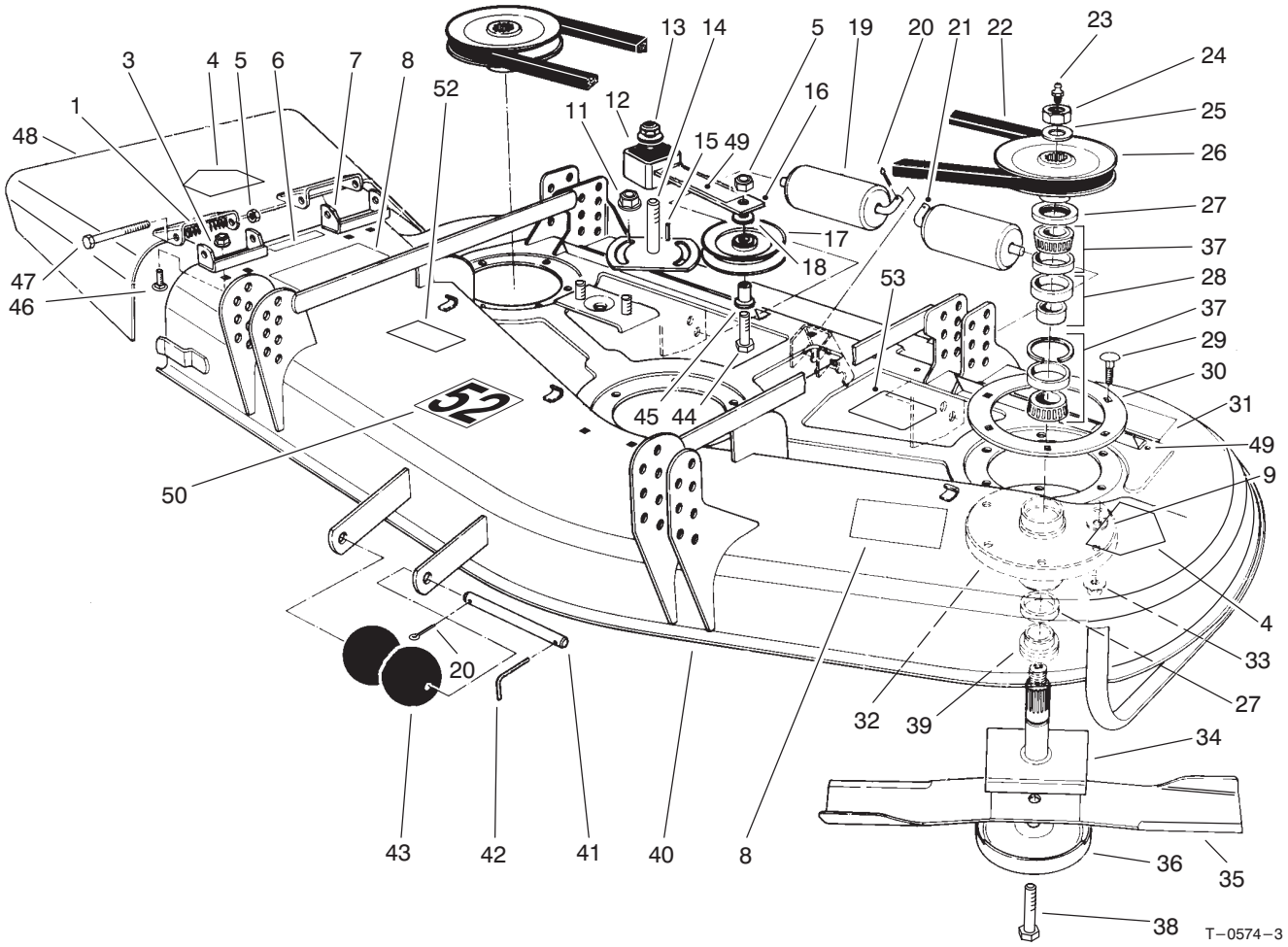

Deck And Spindle Assembly

Ref. No.	Part No.	Description	No. Used
1	40–6230	Spring–Torsion	2
3	32128–20	Nut–HFH	4
4	100–6582	Decal–Danger	2
5	3296–5	Nut–Lock	3
6	100–6553	Decal–Danger	1
7	29–5590	Pivot Bracket–Deflector	2
8	93–7824	Decal–Danger	2
9	3256–24	Washer–Flat	18
11	3290–357	Nut–HFH	2
12	3256–27	Washer–Flat	1
13	3296–33	Nut–Lock	1
14	28–9060	Plate–Idler	1
15	5–1077	Key–Square	1
16	100–6178	Idler Arm ASM (Incl. Ref. #49)	1
17	65–5940	Pulley–Idler	1

Ref. No.	Part No.	Description	No. Used
18	7–0081	Washer–Special	1
19	36–1740	Roller–Deck	2
20	3272–11	Pin–Cotter	3
21	40–0340	Shaft–Rear Roller	2
22	27–1160	V–Belt	1
23	302–2	Fitting–Grease	3
24	32146–20	Nut–Lock	3
25	92–5836	Washer	3
26	27–0970	Pulley	3
27	253–139	Seal–Wave	6
28	27–5970	Spacer–Matched Set	1
29	3231–22	Bolt–Carriage	18
30	27–7680	Ring–Deck Support	3
31	93–7818	Decal–Torque	1
32	61–4160	Housing–Spindle	3
33	32128–21	Nut–HFH	18

© The TORO Company – 2000
All Rights Reserved

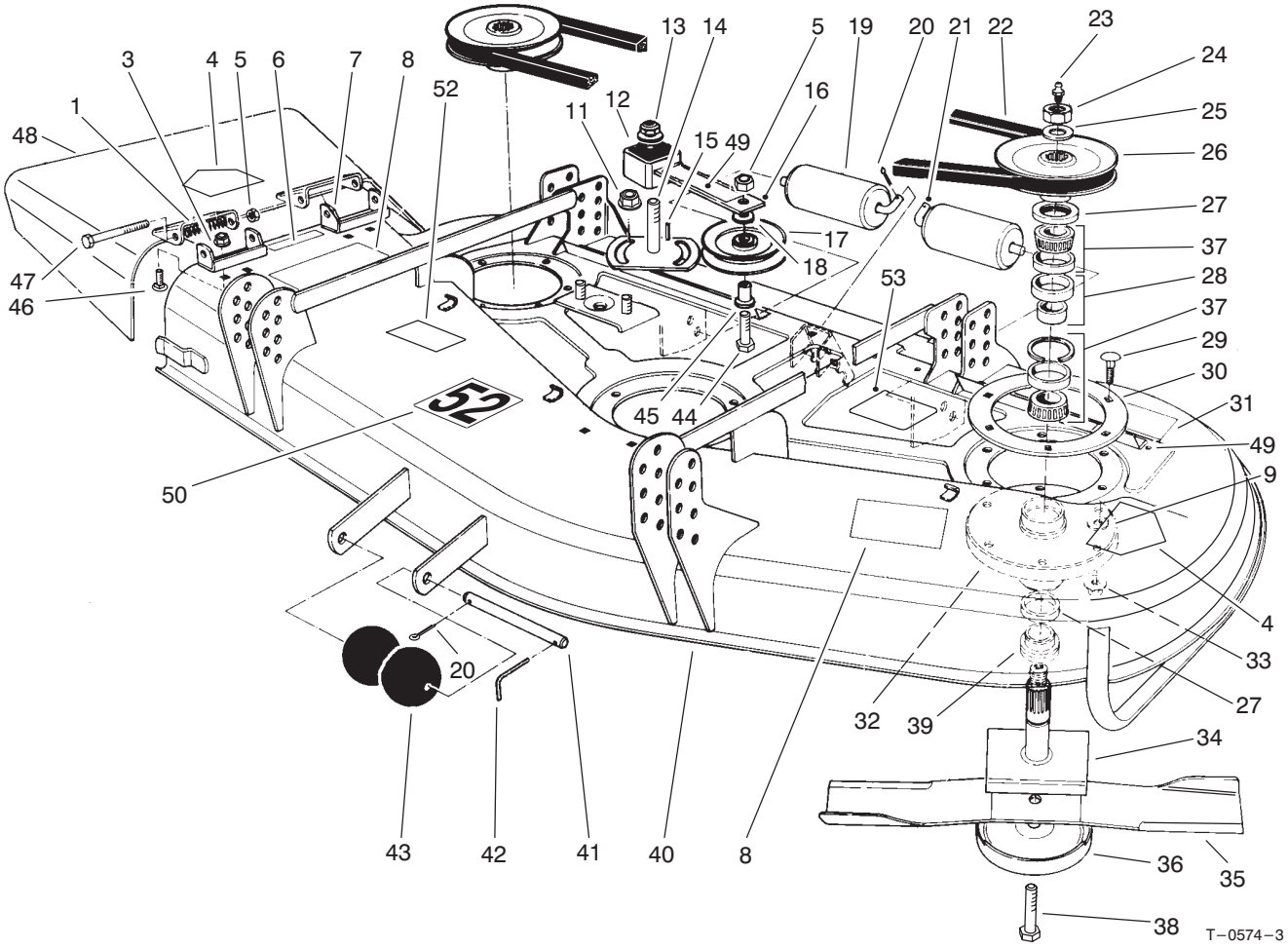

Deck And Spindle Assembly (Continued)

Ref. No.	Part No.	Description	No. Used
34	27−0920	Spindle−Shaft	3
35	27−0990	Blade	3
*	44−5480	Blade−High Sail (Optional)	3
*	56−2390	Blade−Extra High Sail	3
36	72−9361	Cup−Scalp, Anti	3
37	27−0960	Bearing Set−Matched	3
38	92−5816	Screw−Blade Bolt	3
39	27−0950	Spacer−Spindle Bearing	3
40	95−6274	Asm−Deck (Incl. Ref. #4, 6, 8, 31, 49, 50, 52 & 53))	1
41	40−6400	Shaft−Roller	1
42	57−0690	Pin−Cotter	1
43	29−4820	Roller	2
44	3211−8	Screw−HH	1
45	65−5950	Bushing−Pulley	1
46	3230−23	Bolt−Carriage	4

Ref. No.	Part No.	Description	No. Used
47	3211−15	Screw−HH	2
48	93−8714	Asm−Grass Deflector (Incl. Ref. #4)	1
49	100−6578	Decal−Danger	2
50	93−7808	Decal−Warning	1
52	51−3960	Decal−52”	1
53	99−5171	Decal−Belt Routing	1
*	46−8530	Asm−Bearing (Incl. Ref. #28 & 37)	3
*	27−0870	Asm−Spindle (Incl. Ref. #23−28, 32, 34 & 39)	3
*	95−3078	Kit−Spindle (Incl. Ref. #9, 23−29, 32−34 & 36−39)	3
*	95−3070	Kit−Blade & Belt (Incl. Ref. 22 & 35)	1

*Not Illustrated

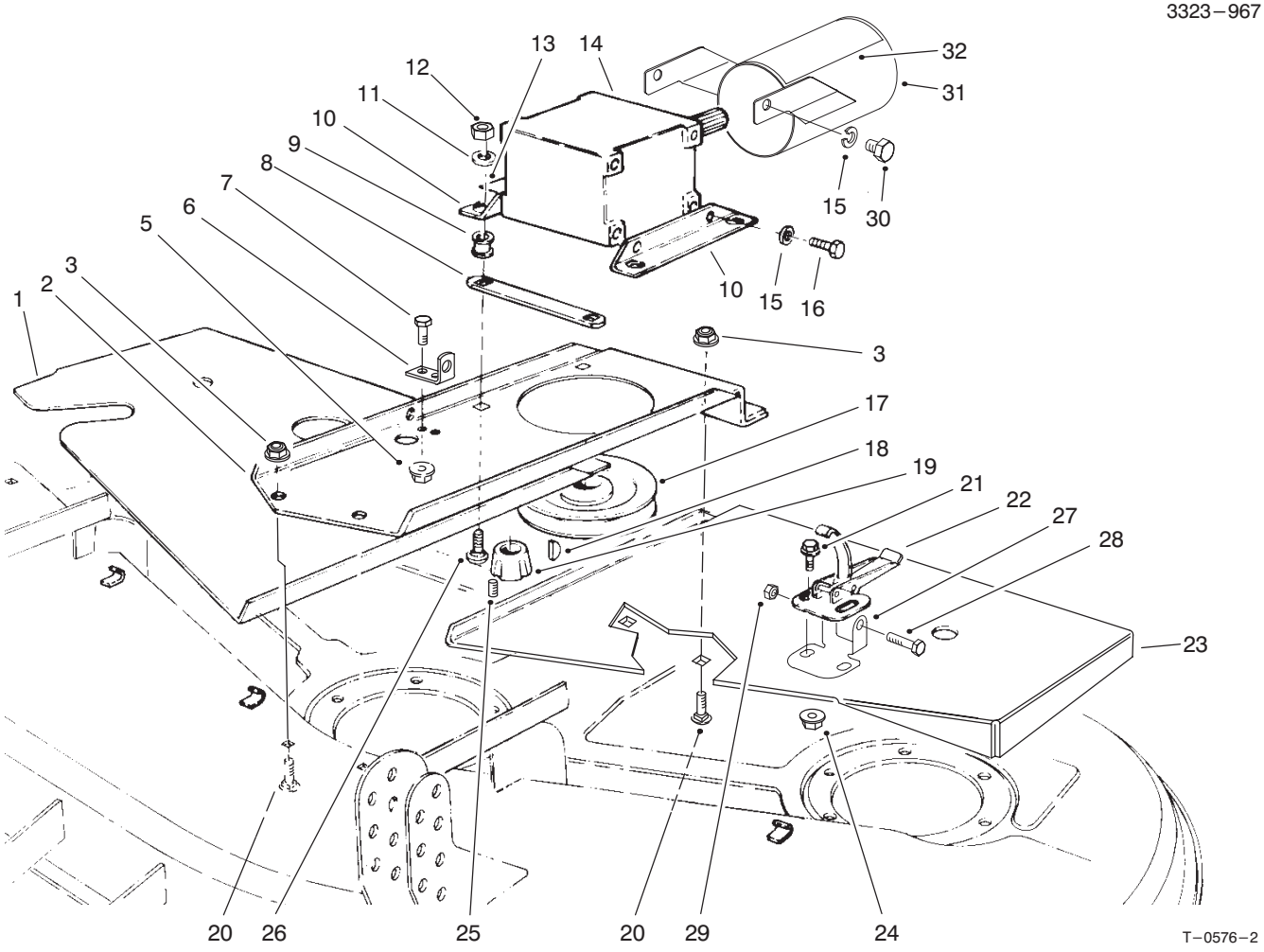

Covers And Gear Box Assembly

Ref. No.	Part No.	Description	No. Used
1	72−9330	Cover RH	1
2	72−9230	Base−Gear Box	1
3	3290−357	Nut−HFH	4
5	32128−20	Nut−HFH	2
6	72−9240	Bracket−Extension	1
7	322−4	Screw−HH	2
8	68−9890	Cover−Gear Box	1
9	63−9750	IS0 Mount−Gear Box	4
10	68−8560	Bracket−Gear Box	2
11	63−8410	Washer	4
12	32153−2	Nut−Lock	4
13	93−6697	Decal−Lube	1
14	68−6810	Asm−Gear Box	1
15	3253−21	Washer−Flat	4
15	3253−21	Washer−Flat (Europe)	6
16	323−4	Screw−HH	4
17	63−9900	Pulley−Gear Box	1

Ref. No.	Part No.	Description	No. Used
18	3257−5	Key−Woodruff	1
19	27−6140	Bushing−Taper Lock (Incl. Ref. #25)	1
20	3231−27	Bolt−Carriage	4
21	3290−321	Screw−Machine	6
22	249−21	Latch−Draw	3
23	72−9340	Cover LH	1
24	32128−17	Nut−HFH	6
25	3245−9	Screw−Set	2
26	3231−26	Bolt−Carriage	4
27	93−7043	Retainer	2
28	321−8	Screw−HH	2
29	3296−56	Nut−Lock Lock	2
30	323−2	Screw−HH	2
31	99−8408	Guard−P.T.O. Shaft (Incl. Ref. #32)	1
32	93−7283	Decal−Danger	1

3323−967

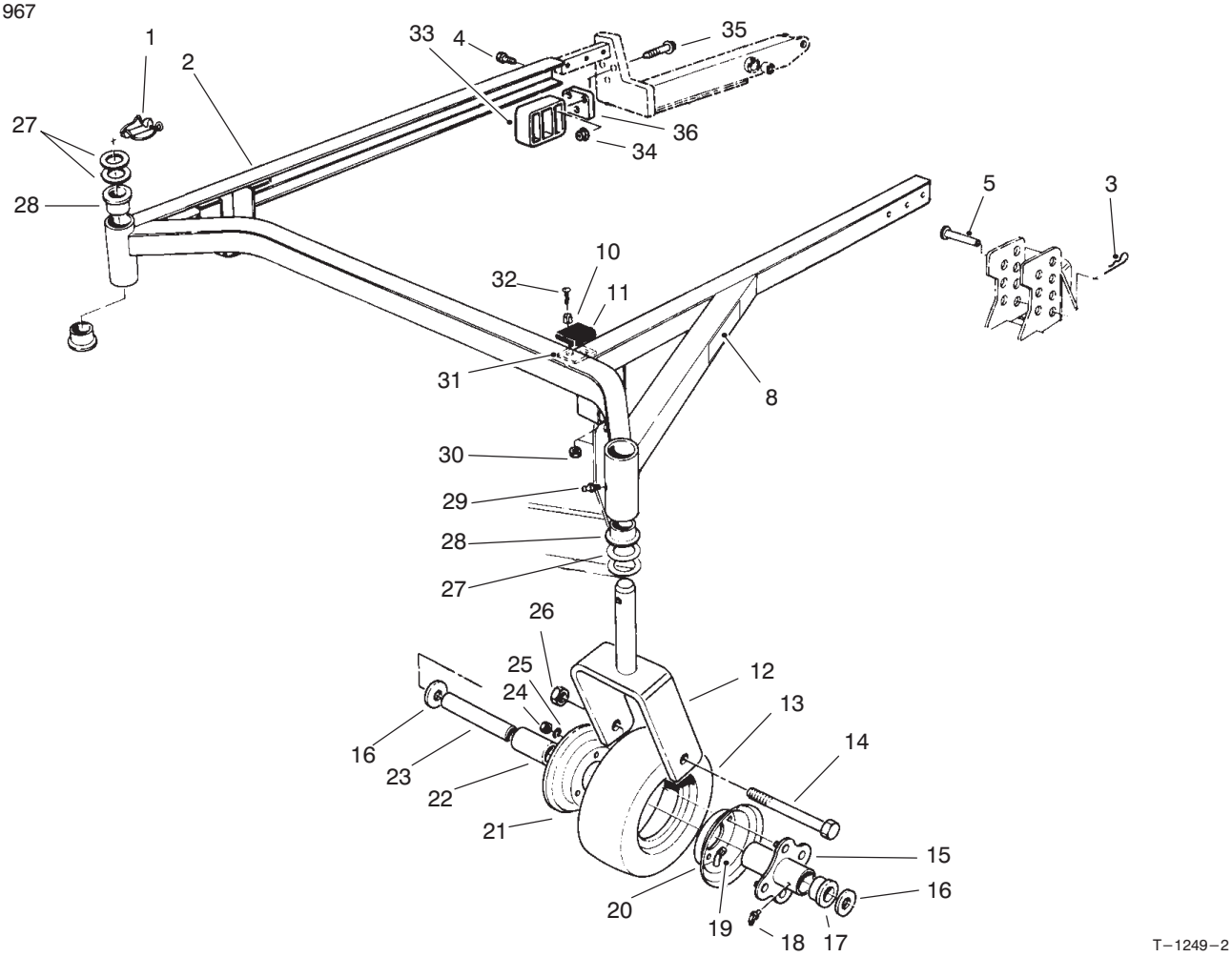

T−1249−2

Carrier Frame Assembly

Ref. No.	Part No.	Description	No. Used
1	283−71	Pin−Lynch	2
2	83−4550	Frame−Deck Suspension (Incl. Ref. #28 & 29)	1
3	3290−355	Pin−Hair	4
4	325−32	Screw−HH	6
5	283−55	Pin−Clevis	4
8	93−7819	Decal−H.O.C.	1
10	40−9520	Spacer−Split	4
11	40−0330	Cushion−Rubber	2
12	68−8900	Fork−Castor, Front	2
13	68−8960	Tire	2
14	325−19	Screw−HH	2
15	68−8940	Hub−Center (Incl. Ref. #18)	2
16	3256−6	Washer−Thrust	4
17	62−5580	Bushing	4
18	302−61	Fitting−Grease	2
19	68−8950	Tube w/Valve	2
20	68−8920	Wheel Half−Female	2
21	68−8930	Wheel Half−Male	2
22	62−5570	Bearing−Roller	2
23	68−8980	Bushing−Spanner	2
24	3219−2	Nut−Hex.	8

Ref. No.	Part No.	Description	No. Used
25	3253−4	Washer−Lock	8
26	32153−5	Nut−Lock	2
27	3−6781	Washer−Thrust	8
28	94−1291	Bushing−Special	4
29	302−5	Fitting−Grease	2
30	3296−2	Nut−Lock	4
31	42−6200	Cushion−Shim	A/R
32	32122−28	Screw−Mach. Truss Hd.	4
33	83−4520	Cradle−Rear	2
34	32128−40	Nut−HFH	6
35	66−9302	Screw−HFH	6
36	83−4580	Spacer	2
37	76−3080	Lift Arm RH (Incl. Ref. #38 & 39)	1
*	76−3090	Lift Arm LH (Incl. Ref. #38 & 39	1
38	92−5648	Bushing	4
39	302−62	Fitting−Grease	2
*	68−8970	Castor Wheel (Incl. Ref. #13, 15, 17−22 & 24−25)	2
*	95−3077	Kit−Castor Wheel (2) (Incl. Ref. #13−26)	1

*Not Illustrated

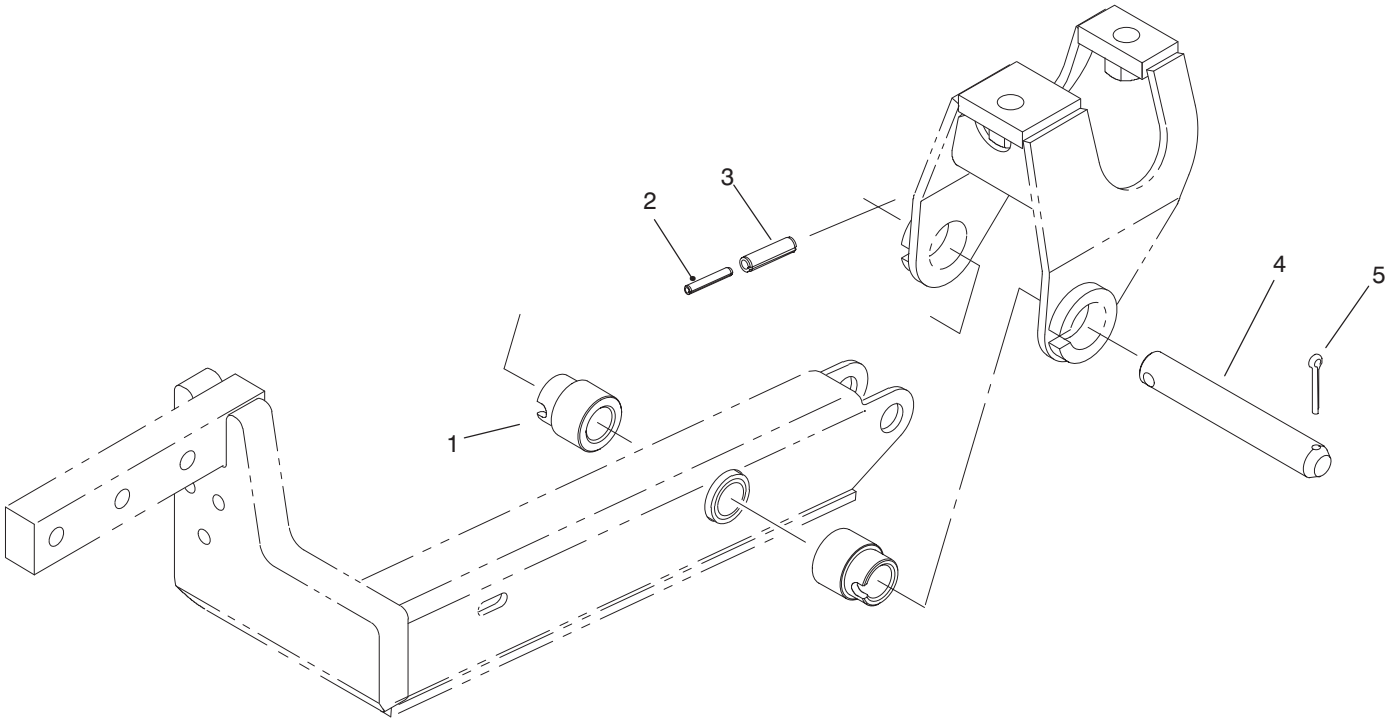

T−3199

Pivot Pin And Spacer Assembly

Ref. No.	Part No.	Description	No. Used
1	98−7926	Spacer−Lift Arm	4
2	32121−71	Pin−Spring	2
3	32121−49	Pin−Spring	2

Ref. No.	Part No.	Description	No. Used
4	98−2348	Asm−Pin, Pivot (Incl. Ref. #2 & 3)	2
5	3272−17	Pin−Cotter	2

3323−967

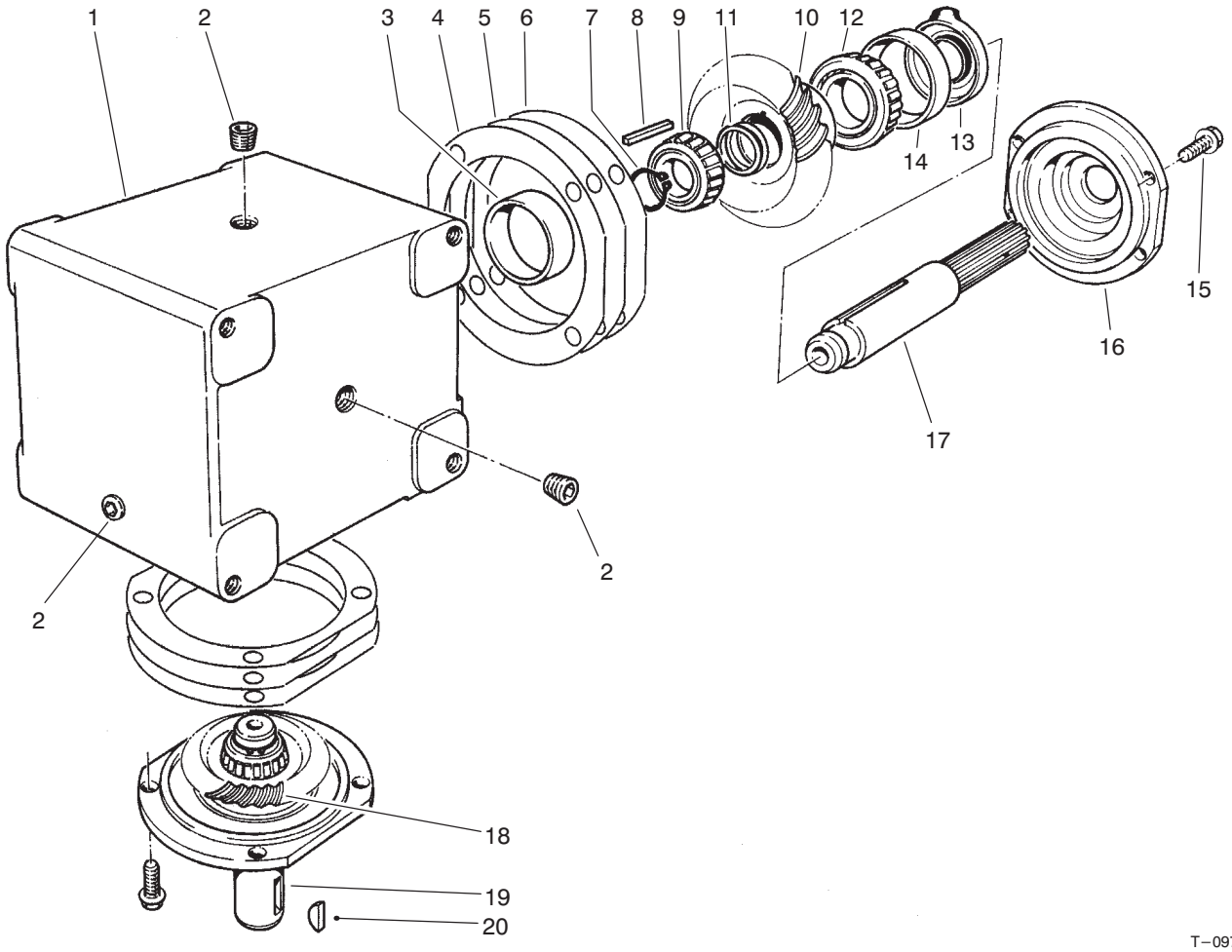

T−0977−1

Gear Box Assembly No. 68−6810

Ref. No.	Part No.	Description	No. Used
1	68−7030	Housing	1
2	62−3490	Plug−Pipe (Solid)	4
3	62−3360	Cup−Bearing	2
4	62−3420	Gasket (.015)	A/R
5	62−3430	Gasket (.005)	A/R
6	62−3440	Gasket (.003)	A/R
7	68−7070	Ring−Retaining	2
8	62−3380	Key	2
9	62−3370	Cone−Bearing	2
10	68−7080	Gear	1

Ref. No.	Part No.	Description	No. Used
11	72−9370	Shim (.020)	2
12	62−3330	Cone−Gear	1
13	62−3400	Seal	2
14	62−3340	Cup−Bearing	2
15	62−3310	Screw−Cap	8
16	62−3410	Cap	2
17	68−7040	Shaft	1
18	68−7060	Gear	1
19	68−7050	Shaft	1
*	68−6810	Asm−Gear Box	1

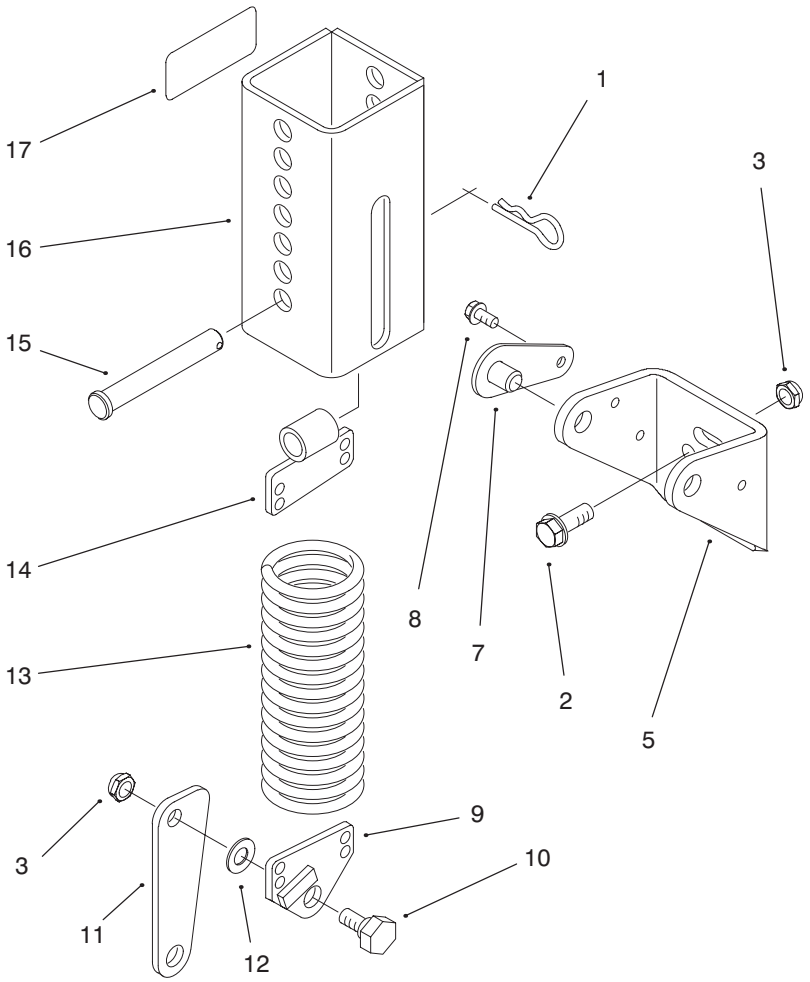

T−1219−1

Counter Balance Assembly

Ref. No.	Part No.	Description	No. Used
1	3290−355	Pin−Hair Cotter	1
2	3234−11	Screw−HFH	2
3	3296−44	Nut−Lock	2
5	66−8460	Bracket−Mounting	1
7	70−7920	Asm−Pin, Lock	2
8	12−3270	Screw−Self Tapping	2
9	66−8420	End−Spring	1
10	46−3380	Bolt−Shoulder	2

Ref. No.	Part No.	Description	No. Used
11	66−8450	Link−Knee	1
12	3256−24	Washer−Flat	2
13	66−8390	Spring−Extension	1
14	70−7940	End−Spring	1
15	283−69	Pin−Clevis	1
16	100−6179	Spring Cover Asm (Incl. #17)	1
17	93−6696	Decal−Caution	2


TORO®