FORM NO. 3324–137

TORO®

MODEL NO. 44850–200000001 & UP
MODEL NO. 44860–200000001 & UP

OPERATOR'S MANUAL

AERATOR 686/AERATOR 687

To assure maximum safety, optimum performance, and to gain knowledge of the product, it is essential that you or any other operator of the machine read and understand the contents of this manual before the engine is ever started. Pay particular attention to the SAFETY INSTRUCTIONS highlighted by this symbol —

The safety alert symbol means CAUTION, WARNING or DANGER — personal safety instruction. Failure to comply with the instruction may result in personal injury.

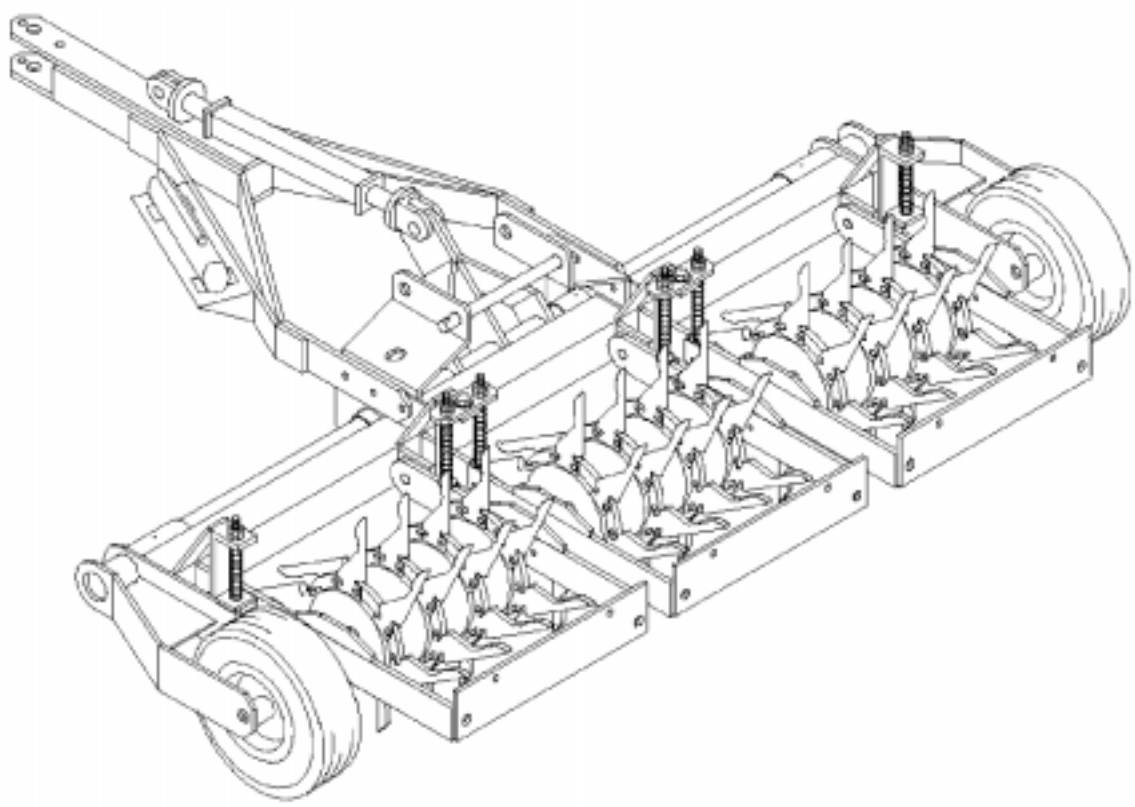

© The TORO Company – 2000

FOREWORD

Thank you for buying a high quality Toro turf care product. To get the best performance from this machine, operate and maintain it according to the instructions in this manual.

Toro also wants to stress the importance of safety. You and anyone else using or maintaining this machine are strongly urged to read this manual, especially all the safety instructions.

DANGER, WARNING and CAUTION, used with the triangular safety alert symbol, highlight safety messages. Always read and understand these messages because they relate to personal injury and your safety.

If you ever need help or have questions about your new Toro turf care product, contact your local Authorized Toro Distributor. The Toro Distributor has a complete supply of replacement parts, a full line of accessories and a professional service staff to support you. Keep your Toro all Toro. Buy genuine Toro parts and accessories.

TABLE OF CONTENTS

	Page
SAFETY INSTRUCTIONS	3–4
SAFETY AND INSTRUCTION DECALS	4
SPECIFICATIONS	5
BEFORE OPERATING	6
OPERATING INSTRUCTIONS	7
LUBRICATION	8
MAINTENANCE	9–10
IDENTIFICATION AND ORDERING	11
WARRANTY	Back Cover

SAFETY INSTRUCTIONS

The safety alert symbol means CAUTION, WARNING or DANGER — "personal safety instruction". Read and understand the instruction because it has to do with safety. Failure to comply with the instruction may result in personal injury.

BEFORE OPERATING

1. Read and understand the contents of this Operator's Manual and the traction unit or tow tractor to be used with this attachment before operating the machine. Become familiar with all controls and know how to stop quickly. A free replacement manual is available by sending complete Model and Serial Number to:

The Toro Company
8111 Lyndale Avenue South
Bloomington, Minnesota 55420–1196

2. Never allow children to operate the machine. Do not allow adults to operate machine without proper instruction. Only trained operators who have read this manual should operate this machine.

3. Never operate the machine when under the influence of drugs or alcohol.

4. Keep all shields and safety devices in place. If a shield, safety device or decal is illegible or damaged, repair or replace it before operation is commenced. Also tighten any loose nuts, bolts and screws to assure machine is in safe operating condition.

5. Before each use, be sure all bolts and nuts are tight. Check the general condition of the tines.

6. Do not alter this equipment in any manner which may cause hazardous conditions.

WHILE OPERATING

7. Using the machine demands attention, and to prevent loss of control:

A. Operate only in daylight or when there is good artificial light.

B. Drive slowly.

C. Watch for holes or other hazards.

D. Look behind machine before backing up.

E. Do not drive close to a sand trap, ditch, creek or other hazard.

F. Reduce speed when making sharp turns and when turning on a hillside.

G. Avoid sudden stops and starts.

H. This product is not designed for or intended to be operated on roadways.

8. Operator must be skilled and trained in how to drive on hillsides. Failure to use caution on slopes or hills may cause loss of control possibly resulting in personal injury or death.

9. If tractor or towing vehicle engine stalls or machine loses headway and cannot make it to the top of a slope, do not turn machine around. Always back slowly straight down the slope.

10. Do not carry passengers on the machine or tractor and keep everyone away from the areas of operation.

11. Before getting off the tractor or towing vehicle seat:

A. Place the tractor or towing vehicle in neutral position and put the engine in idle position.

B. Set the parking brake and disengage the PTO.

C. Shut the engine off and remove key from ignition switch. Wait for all movement to stop before getting off seat.

12. ALWAYS follow all safety precautions in the tractor's or towing vehicles operator manual pertaining to attachments.

SAFETY INSTRUCTIONS

MAINTENANCE

13. Remove the key from the tractor's ignition switch to prevent accidental starting of the engine when servicing, adjusting or storing the machine.

14. If major repairs are ever needed or assistance desired,contact an Authorized TORO Distributor.

15. Make sure machine is in safe operating condition by keeping nuts, bolts and screws tight.

16. Keep body and hands away from pin hole leaks or nozzles that eject hydraulic fluid under high pressure. Use paper or cardboard, not hands, to search for leaks. Hydraulic fluid escaping under pressure can have sufficient force to penetrate skin and do serious damage. If fluid is injected into the skin it must be surgically removed within a few hours by a doctor familiar with this form of injury or gangrene may result.

SAFETY AND INSTRUCTION DECALS

The following decals are installed on the machine. If any become damaged or illegible, replace it. The decal part number is listed below and in your parts catalog. Replacement can be ordered from your Authorized Toro Distributor.

ON R.H. TRANSPORT LOCK PLATE (686)
ON R.H. LIFT ARM (687)
(Part No. 01–506–0340)

NEAR BEARINGS, WHEELS
& GREASE FITTINGS
(Part No. 58–6520)

SPECIFICATIONS AERATOR 686

FRAME: Welded tubular steel; divided into 3 sections, each section moves horizontally and diagonally to follow contour, spring loaded.

AERATING WHEELS: (12) 70 lb. castings (4 per section) with permanent roll pin every other hole.

SHAFT: 1 – 1/4", machined to 1"

TINES: (96), 8 per wheel, secured with 1 bolt, roll pin in wheel secures second hole in tine; 1/2 or 3/4" open or closed, 4" slicing blades are available. (One set standard)

BEARINGS: Self sealed, self aligned

TRANSPORT TIRES: 4.80 x 8 – 2 ply

HITCH: Drop pin.

LIFT MECHANISM: Hand hydraulic pump to (1) 10" stroke cylinder.

SPRINGS: (6) to assist down pressure on tines.

AERATING SWATH: 78"

PATTERN: 6" on center

OPERATING SPEED: 1 – 10 MPH, depending on conditions

OVERALL WIDTH: 90"

WEIGHT: Approx. 1350 lbs. w/o weights

OPTIONS:

Weight Kit (3 per set)	Part No. 68 – 608 – 3011
Tongue Jack	Part No. 98 – 5016
CE Guard Kit	Part No. 95 – 3350
Traction Remote Kit	Part No. 68 – 608 – 3521

Specifications and design subject to change without notice.

SPECIFICATIONS AERATOR 687

FRAME: Welded tubular steel; divided into 3 sections, each section moves horizontally and diagonally to follow contour, spring loaded (Pat. Pend.)

AERATING WHEELS: (12) 70 lb. castings (4 per section) with permanent roll pin every other hole.

SHAFT: 1 – 1/4", machined to 1"

TINES: (96), 8 per wheel, secured with 1 bolt, roll pin in wheel secures second hole in tine; 1/2" or 3/4" open or closed, 4" slicing blades are avail – able. (One set standard)

BEARINGS: Self sealed, self aligned

HITCH: 3 Point – Category 1 Tractor Type.

SPRINGS: (6) to assist down pressure on tines.

AERATING SWATH: 78"

PATTERN: 6" on center

OPERATING SPEED: 1 – 10 MPH, depending on conditions

OVERALL WIDTH: 82"

WEIGHT: Approx. 1120 lbs. w/o weights

OPTIONS:

Weight Kit (3 per set)	Part No. 68 – 608 – 3011
CE Guard Kit	Part No. 95 – 3350

BEFORE OPERATING

CHECK TIRE PRESSURE

1. Check tire pressure before each use. Maintain tire pressure at 60 PSI.

BEFORE ATTACHING AERATOR

1. Before getting off the tractor or towing vehicle seat:

A. Place the tractor or towing vehicle in neutral position and put the engine in idle position.

B. Set the parking brake and disengage the PTO.

C. Shut the engine off and remove key from ignition switch. Wait for all movement to stop before getting off seat.

2. Dismount from the tractor or tow vehicle.

ATTACH AERATOR 686 TO TOWING VEHICLE

1. Attach the hitch of the aerator to the tongue of the towing vehicle using the towing vehicle's hardware.

2. Do Not Lift Tongue By Hand. Use the tongue jack or powered lift to align the hitch to the tow tractor.

ATTACH AERATOR 687 TO TRACTOR

1. Lower the three point hitch arms of the tractor.

2. Position the aerator so that the three point hitch arms of the tractor line up with the lift arms of the aerator.

3. Attach the arms of the tractor to the hitch pins on the aerator lift arms.

4. Attach the tractors stabilizer bar to the 3/4" x 4" bolt on the top of the lift arms.

INSTALLING TINES (Fig. 1)

IMPORTANT: AFTER attaching the aerator to the tractor or towing vehicle the tines may be installed.

1. Follow the instructions referring to attaching the aerator to the tractor or towing vehicle.

2. Start at the outside casting and install the tines as shown. Install all 8 tines on the casting making sure the roll pin is in the front position (Fig. 1). Use 1/2" x 1 – 3/4" bolts for the second hole and secure tightly.

3. Repeat on the second casting and continue until all 96 tines are installed.

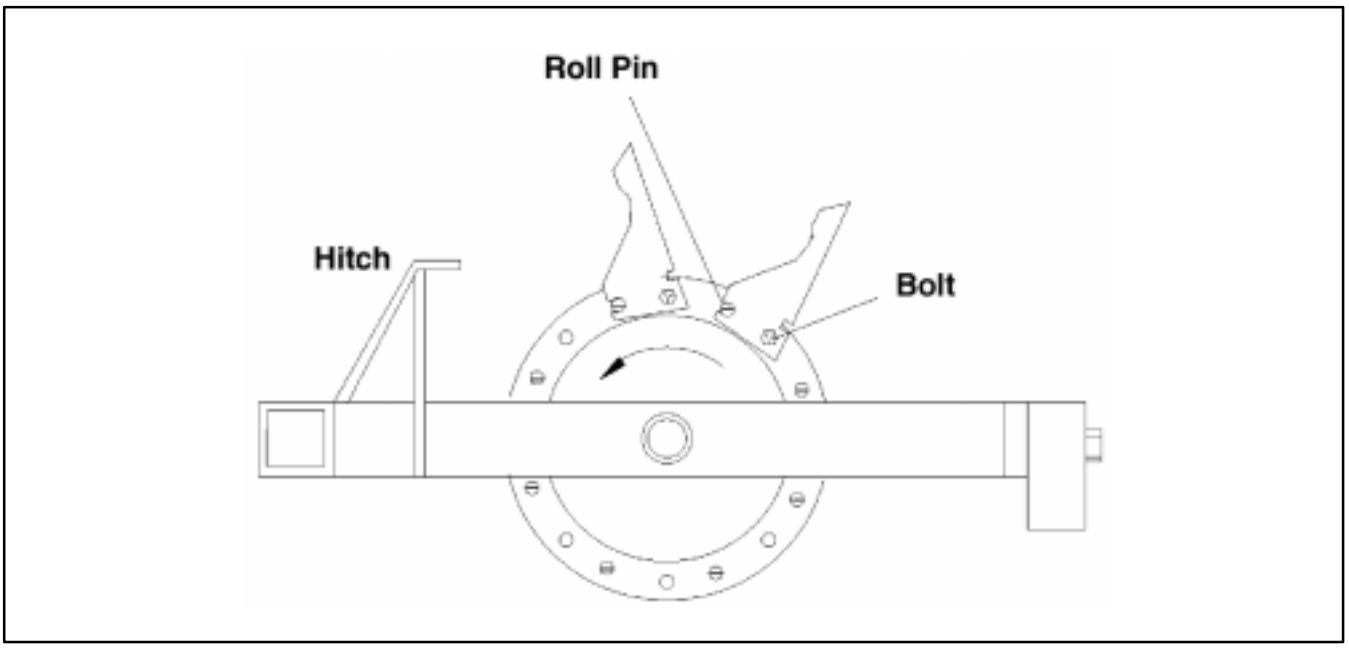

Figure 1

OPERATING INSTRUCTIONS

AERATING PROCEDURE FOR 686 TOW HITCH AERATOR

1. Move the lock pin to the rear (aerating) position. See Fig. 2.

2. Open the hydraulic hand pump bleed valve on base of pump to release pressure and lower the aerator to the ground.

3. Return to the operator's seat and follow the vehicle instructions and procedures for towing an implement.

4. At the end of desired aerating region, stop the tractor and set the parking brake, turn off engine, before getting out of operator's seat.

5. Close the hydraulic hand pump bleed valve and stroke pump handle to raise the aerator to the transport position.

6. When transporting the Aerator 686, place the lock pin in the front hole. This prevents the aerator from dropping in case of accidental release of oil in the lift cylinder. See Fig. 2.

AERATING PROCEDURE FOR 687 3 POINT HITCH AERATOR

Become familiar with the controls for 3 Point or Remote Hydraulics operation of the Tow Tractor or vehicle before operating Aerator 687.

1. Start tractor engine and run at a low RPM.

2. With 3 Point or Remote Hydraulics Control of tractor, slowly lower the aerator while the tractor or towing vehicle is moving slowly forward.

3. As aerating begins increase speed of the tractor or towing vehicle.

4. Raise the aerator at the end of the pass before turning.

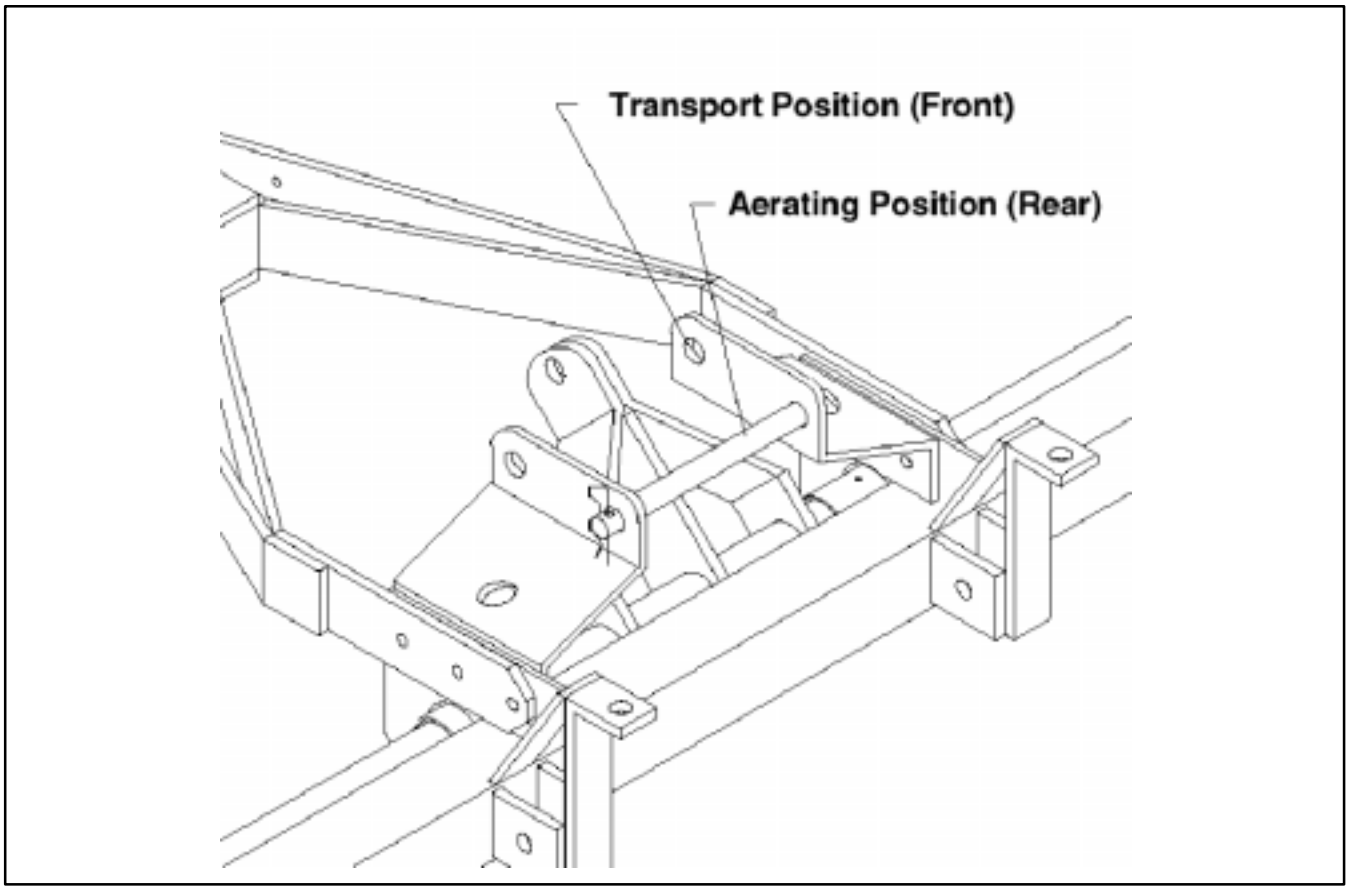

Figure 2

LUBRICATION

BEARINGS (Fig. 3)

The aerator has six self sealing bearings that must be lubricated with a No. 2 Lithium based grease.

IMPORTANT: Lubricate the bearings as often as necessary to maintain a slight leakage on the seals. Too much grease can cause overheating.

GREASE FITTINGS AND WHEEL BEARINGS AERATOR 686 (Fig. 3)

Grease fittings weekly or every 40 operating hours. Use a No. 2 Lithium based grease.

GREASE FITTINGS– AERATOR 687 (Not Shown)

1. Grease the grease fittings weekly or every 40 operating hours. Use a No. 2 Lithium based grease.

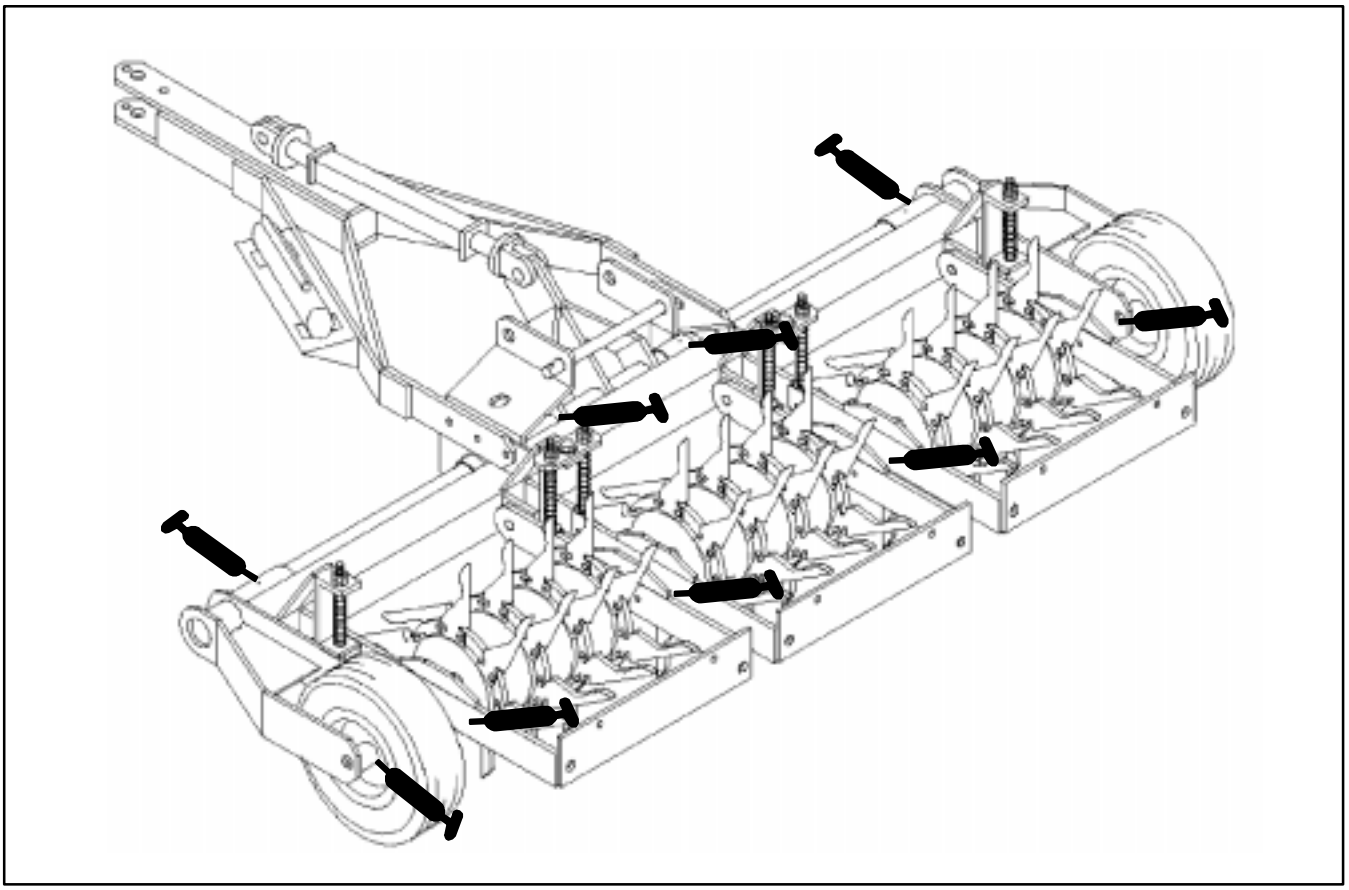

Figure 3

MAINTENANCE

MAIN ARMS (Fig. 4)

The 6 main arms pivot freely horizontally and vertically to allow the unit to follow the contour of the ground. A bronze bushing is pressed inside the pivot holes between the main arm and mainframe. The bronze bushing is 1/8” longer
than the thickness of both plates combined. The 5/8 x 2” bolt should be tightened against the bushings, not the arms, to allow it to pivot freely. The bronze bushings should be checked every 100 hours of operation for signs of wear. Replace any worn bushings.

SPRINGS (Fig. 4)

The purpose of the springs is to distribute the weight evenly and reduce the shock load on the pivot points. The springs are adjusted evenly across to level the unit. Use the nuts on top of the spring rod (Item A) to adjust the springs.

IMPORTANT: NEVER adjust the spring so the coils are completely compressed. Allow at least 1/16” between coils.

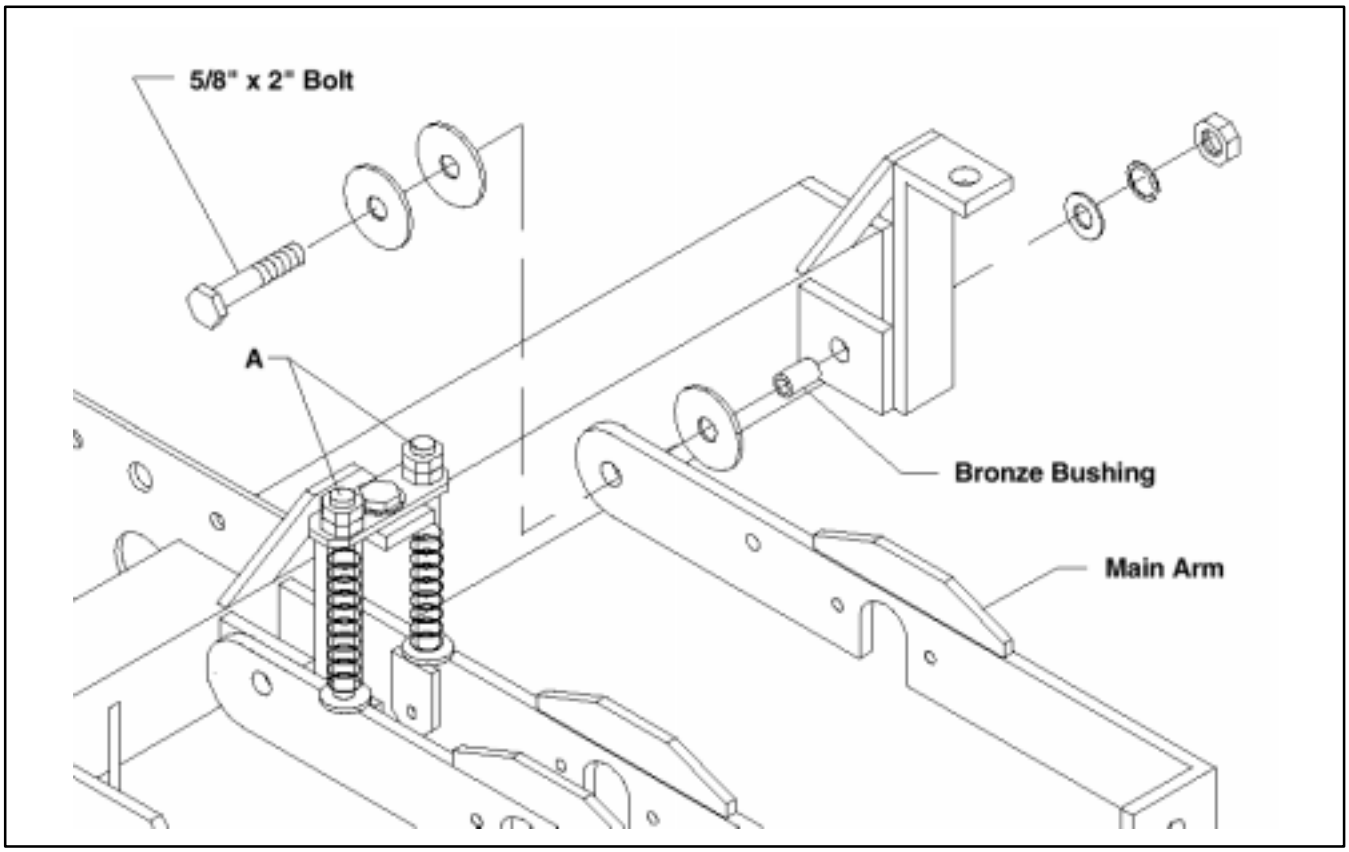

Figure 4

TINE WEAR (Fig. 5)

To obtain maximum aerating performance always check the tines for wear before every use. Severely worn tines are easy to bend or break and will leave the cores in the ground. See Fig. 5 for examples of tine wear.

Always clean cores out of tines before storage. Cores left in tines for extended periods can cause pitting on the inside of the tine. The pits in the tine keep the core from ejecting.

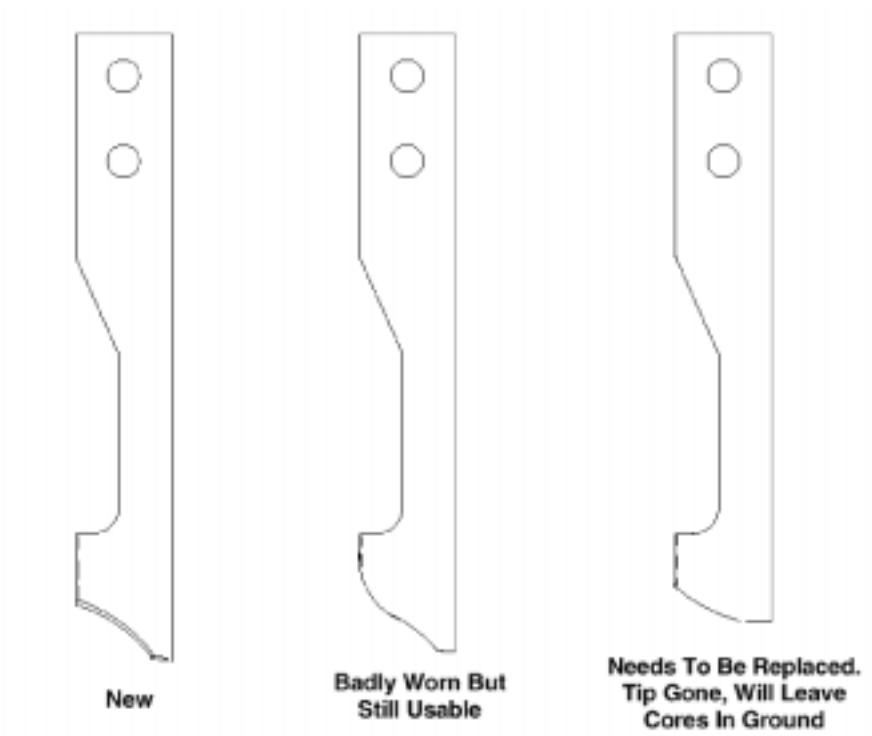

Figure 5

STORAGE

1. Thoroughly clean the aerator.

2. Inflate tires to 60 PSI.

3. Check all fasteners. Tighten as necessary.

4. Check the condition of the tines. Replace any broken or worn tines. Tighten all fasteners attaching the tines to the castings.

5. Grease or oil all grease fittings and bearings. Wipe off excess lubricant.

IDENTIFICATION AND ORDERING

MODEL AND SERIAL NUMBERS

The AERATOR 686 and AERATOR 687 has two identification numbers: a model and serial number. The two numbers are stamped on a plate which is riveted to the main arm. In any correspondence concerning the AERATORS, supply model and serial numbers to be sure that the correct information and replacement parts are obtained.

To order replacement parts from an authorized TORO Distributor, supply the following information:

1. Model and serial numbers of the machine.

2. Part number, description and quantity of parts desired.

Note: Do not order by reference number if a parts catalog is being used; use the part number.

The Toro Aerator Commercial Products Warranty

A Two-Year Limited Warranty

Conditions and Products Covered

The Toro Company and its affiliate, Toro Warranty Company, pursuant to an agreement between them, jointly warrant your 1996 or newer Toro Hydroject® 3000, Hydroject® 4000, Greens, Fairway Aerator or ProCore™ Aerator ("Product") purchased after January 1, 1997, to be free from defects in materials or workmanship for two years or 500 operational hours*, whichever occurs first. Where a warrantable condition exists, we will repair the Product at no cost to you including diagnosis, labor, parts, and transportation. This warranty begins on the date the Product is delivered to the original retail purchaser.

* Product equipped with hour meter

Instructions for Obtaining Warranty Service

You are responsible for notifying the Commercial Products Distributor or Authorized Commercial Products Dealer from whom you purchased the Product as soon as you believe a warrantable condition exists.

If you need help locating a Commercial Products Distributor or Authorized Dealer, or if you have questions regarding your warranty rights or responsibilities, you may contact us at:

Toro Commercial Products Service Department
Toro Warranty Company
8111 Lyndale Avenue South
Bloomington, MN 55420-1196
612-888-8801
800-982-2740
E-mail: commercial.service@toro.com

Owner Responsibilities

As the Product owner, you are responsible for required maintenance and adjustments stated in your operator's manual. Failure to perform required maintenance and adjustments can be grounds for disallowing a warranty claim.

Items and Conditions Not Covered

Not all product failures or malfunctions that occur during the warranty period are defects in materials or workmanship. This express warranty does not cover:

- Product failures which result from the use of non-Toro replacement parts, or from installation and use of add-on, modified, or unapproved accessories.
- Product failures which result from failure to perform required maintenance and/or adjustments.
- Product failures which result from operating the Product in an abusive, negligent or reckless manner.
- Parts subject to consumption through use unless found to be defective. Examples of parts which are consumed, or used up, during normal Product operation include, but are not limited to, blades, reels, bedknives, tines, spark plugs, castor wheels, tires, filters, belts, etc.
- Failures caused by outside influence. Items considered to be outside influence include, but are not limited to, weather, storage practices, contamination, use of unapproved coolants, lubricants, additives, or chemicals, etc.
- Normal "wear and tear" items. Normal "wear and tear" includes, but is not limited to, damage to seats due to wear or abrasion, worn painted surfaces, scratched decals or windows, etc.

Parts

Parts scheduled for replacement as required maintenance are warranted for the period of time up to the scheduled replacement time for that part.

Parts replaced under this warranty become the property of Toro. Toro will make the final decision whether to repair any existing part or assembly or replace it. Toro may use factory remanufactured parts rather than new parts for some warranty repairs.

General Conditions

Repair by an Authorized Toro Distributor or Dealer is your sole remedy under this warranty.

Neither The Toro Company nor Toro Warranty Company is liable for indirect, incidental or consequential damages in connection with the use of the Toro Products covered by this warranty, including any cost or expense of providing substitute equipment or service during reasonable periods of malfunction or non-use pending completion of repairs under this warranty. Except for the Emissions warranty referenced below, if applicable, there is no other express warranty. All implied warranties of merchantability and fitness for use are limited to the duration of this express warranty.

Some states do not allow exclusions of incidental or consequential damages, or limitations on how long an implied warranty lasts, so the above exclusions and limitations may not apply to you.

This warranty gives you specific legal rights, and you may also have other rights which vary from state to state.

Note regarding engine warranty: The Emissions Control System on your Product may be covered by a separate warranty meeting requirements established by the U.S. Environmental Protection Agency (EPA) and/or the California Air Resources Board (CARB). The hour limitations set forth above do not apply to the Emissions Control System Warranty. Refer to the Engine Emission Control Warranty Statement printed in your operator's manual or contained in the engine manufacturer's documentation for details.

Countries Other than the United States or Canada

Customers who have purchased Toro products exported from the United States or Canada should contact their Toro Distributor (Dealer) to obtain guarantee policies for your country, province, or state. If for any reason you are dissatisfied with your Distributor's service or have difficulty obtaining guarantee information, contact the Toro importer. If all other remedies fail, you may contact us at Toro Warranty Company.

Rev. 12/09/1999