FORM NO. 3324-150

TORO®

Model No. 04060—200000001 & Up
Model No. 04060TE—200000001 & Up

OPERATOR'S MANUAL

GREENSMASTER® 1600

The GREENSMASTER® 1600 conforms to the American National Standards Institute's safety standards for walk behind mowers; thus Toro proudly displays the ANSI safety seal.

TORO
THIS UNIT CONFORMS TO ANSI B71.4 – 1984

To achieve maximum safety, optimum performance, and to gain knowledge of the machine, it is essential that you or any other operator of the machine read and understand the contents of this manual before the engine is started. Pay particular attention to the instructions highlighted by the triangular safety alert symbol. Failure to comply with the safety instructions may result in personal injury.



© The TORO Company – 2000

FOREWORD

The GREENSMASTER® 1600 was developed to provide an efficient trouble free method of mowing high quality turf. The latest concepts of engineering, design and safety have been incorporated into this machine, along with the highest quality parts and workmanship. Excellent service will be derived if proper operation and maintenance practices are followed.
TORO is concerned about future use of the machine and of safety to the user. Therefore, this manual must be read by you and those involved with the GREENSMASTER® 1600 to make sure that safety, proper set-up, operation and maintenance procedures are followed at all times. The major sections of the manual are:

1. Safety Instructions
2. Set-Up Instructions
3. Before Operating
4. Operating Instructions
5. Maintenance

Safety, mechanical and some general information in this manual are emphasized. **DANGER**, **WARNING** and **CAUTION** identify safety messages. Whenever the triangle safety symbol appears, it is followed by a safety message that must be read and understood. For more details concerning safety, read the safety instructions on pages 3 and 4. **IMPORTANT** identifies special mechanical information and **NOTE** identifies general information worthy of special attention.

⚠ WARNING: ⚠

The engine exhaust from this product contains chemicals known to the State of California to cause cancer, birth defects, or other reproductive harm.

OPTIONAL SPARK ARRESTER

In some places a spark arrester muffler must be used because of local, state or federal regulations. The spark arrester available from your local Toro Distributor is approved by the United States Department of Agriculture and the United States Forest Service.

Spark Arrester Part No. 94-9101

When the mower is used or operated on any California forest, brush or grass covered land, a properly operating spark arrester must be attached to the muffler. The operator is violating state law, Section 442 Public Resources Code if a spark arrester is not used.

If help concerning set up, operation, maintenance or safety is ever needed, contact your local Authorized TORO Distributor. In addition to genuine TORO replacement parts, the distributor also has optional equipment for the complete line of TORO turf care equipment. Keep your Toro all TORO. Buy genuine TORO parts and accessories.

TABLE OF CONTENTS

SAFETY INSTRUCTIONS 3–4
SAFETY AND INSTRUCTION DECALS 5
SPECIFICATIONS 6
LOOSE PARTS CHART 6
SET–UP INSTRUCTIONS 7
PREPARATION BEFORE OPERATING 8
Add Engine Oil 8
Fill Fuel Tank 8
Leveling Rear Drum To Reel 9
Adjust Bedknife To Reel 9
Adjust Height Of Cut 10
Adjust Grass Shield Height 10
Adjusting Cut–off Bar 11
Install Grass Basket 11
Check Operation of Interlock Switch 11
CONTROLS 12
STARTING AND STOPPING 13
OPERATING INSTRUCTIONS 13
Transport Operation 13
Preparing To Mow 13
Mowing Operation 13
Prior To Mowing 13
Method Of Mowing 13
Control Operation 14
After Mowing 14
LUBRICATION 14
Grease Fittings 14
DAILY MAINTENANCE CHECKLIST 15
MAINTENANCE 16
Engine Oil 16
Servicing Air Cleaner 16
Replacing Spark Plug 17
Cleaning Fuel Filter 17
Adjusting Belts 17
Differential Belt Replacement 20
Adjusting Traction Control 20
Adjusting Service / Park Brake 20
Adjusting Interlock Switch 21
Servicing Bedbar 21
Reel Backlapping 21
MAINTENANCE SCHEDULE 23
IDENTIFICATION AND ORDERING 23
THE TORO PROMISE . . . . . Back cover

SAFETY INSTRUCTIONS

The GREENSMASTER® 1600 was tested and certified by TORO for compliance with the B71.4—1984 specifications of the American National Standards Institute. Although hazard control and accident prevention partially are dependent upon the design and configuration of the machine, these factors are also dependent upon the awareness, concern, and proper training of the personnel involved in the operation, transport, maintenance, and storage of the machine. Improper use or maintenance of the machine can result in injury or death. To reduce the potential for injury or death, comply with the following safety instructions.

BEFORE OPERATING

1. Operate the machine only after reading and understanding the contents of this manual. A replacement manual is available by sending complete model and serial number to:

The Toro Company
8111 Lyndale Avenue South
Bloomington, Minnesota 55420-1196.

2. Never allow children to operate the machine or adults to operate it without proper instructions.

3. Become familiar with the controls and know how to stop the engine quickly.

4. Keep all shields, safety devices and decals in place. If a shield, safety device or decal is malfunctioning, illegible, or damaged, repair or replace it before operating the machine.

5. Always wear substantial shoes. Do not operate machine while wearing sandals, tennis shoes or sneakers. Do not wear loose fitting clothing which could get caught in moving parts and cause personal injury.

6. Wearing safety glasses, safety shoes, long pants and a helmet is advisable and required by some local safety and insurance regulations.

7. Assure work area is clear of objects which might be picked up and thrown by the reel.

8. Keep everyone, especially children and pets away from the areas of operation.

9. Since gasoline is highly flammable, handle it carefully.

A. Use an approved gasoline container.

B. Do not remove cap from fuel tank when engine is hot or running.

C. Do not smoke while handling gasoline.

D. Fill fuel tank outdoors and no higher than to the bottom of filter screen. Do not overfill.

E. Wipe up any spilled gasoline.

F. Fuel may leak from filler neck when mower is tilted for servicing if tank is over filled.

SAFETY INSTRUCTIONS

10. Check the safety interlock switch daily for proper operation; refer to page 11. If a switch should malfunction, replace the switch before operating machine. (After every two years, replace the interlock switch in the safety system, whether it is working properly or not.)

WHILE OPERATING

11. Do not run the engine in a confined area without adequate ventilation. Exhaust fumes are hazardous and could be deadly.

12. Always stand behind the handle when starting and operating the machine.

13. To start and stop the engine:

A. Open fuel shut-off valve.

B. Verify that the traction drive lever on handle is in NEUTRAL position and reel drive lever on mower is DISENGAGED.

C. Move on/off switch to ON position, set choke to full choke position (cold start) and throttle to half throttle.

D. Pull starter cord to start engine.

E. Move throttle to SLOW and on/off switch to OFF position to stop engine.

14. To transport mower from one area to another:

A. Install transport wheels.

B. Disengage reel drive lever.

C. Start engine.

D. Press down on handle to raise front of mower and engage traction drive.

15. Before beginning mowing operation:

A. Disengage traction drive.

B. Stop engine.

C. Remove transport wheels.

D. Engage reel drive lever.

16. Before emptying basket of clippings, disengage traction drive, reduce engine speed and move on/off switch to off position.

17. Do not touch engine, muffler or exhaust pipe while engine is running or soon after it has stopped because these areas are hot enough to cause burns.

18. If the cutting unit strikes a solid object or vibrates abnormally, stop immediately, turn engine off,wait for all motion to stop and inspect for damage. A damaged reel or bedknife must be repaired or replaced before operation is commenced.

19. Whenever machine is left unattended, be sure engine is stopped and cutting unit reel is not spinning. Close fuel shut-off valve if machine is not to be used for an extended period of time.

MAINTENANCE

20. Before servicing or making adjustments to the machine, stop the engine and pull the spark plug wire off spark plug to prevent accidental starting of the engine.

21. To make sure entire machine is in good condition, keep all nuts, bolts, screws and belts properly tightened.

22. If major repairs are ever needed or assistance is required, contact an Authorized TORO Distributor.

23. To reduce potential fire hazard, keep the engine area free of excessive grease, grass, leaves and accumulation of dirt.

24. If the engine must be running to perform a maintenance adjustment, keep hands, feet, clothing, and any parts of the body away from the cutting unit and any moving parts. Keep everyone away.

25. Do not overspeed engine by changing governor settings. Maximum engine speed is 3600 rpm. To assure safety and accuracy, have an Authorized Toro Distributor check maximum engine speed with a tachometer.

26. Engine must be shut off before checking oil or adding oil to the crankcase.

27. To be sure of optimum performance and safety, always purchase genuine TORO replacement parts and accessories. Replacement parts and accessories made by other manufacturers could be dangerous. Such use could void the product warranty of The Toro Company.

Sound Pressure Level

This unit has an equivalent continuous A-weighted sound pressure at the operator ear of: 85 dB(A), based on measurements of identical machines per Directive 84/538/EEC and amendments.

Vibration Level

Hand-Arm

This unit has a hand-arm vibration level of 5.85 m/s^2, based on measurements of identical machines per ISO 5349 procedures.

SAFETY AND INSTRUCTION DECALS

The following safety and instruction decals are installed on the machine. If any become damaged or illegible, replace them. Decal part numbers are listed below and in the parts catalog. Order replacements from your Authorized Toro Distributor.

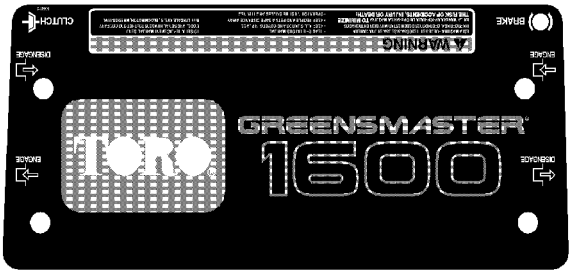

On Control Panel
Part No. 104-0512
Traction Clutch & Parking Brake
Engage – Disengage

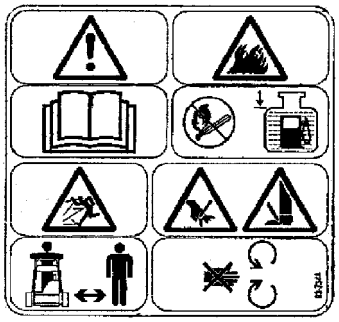

On Fuel Tank
Part No. 93-7348
Fuel Filling & Safety Instruction

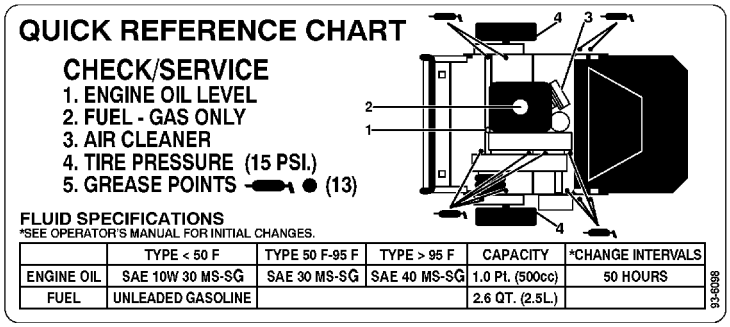

On Grass Shield
Part No. 93-6098
Quick Reference Aid

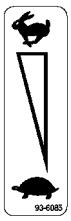

On Control Panel
Part No. 93 – 6085
Throttle Control

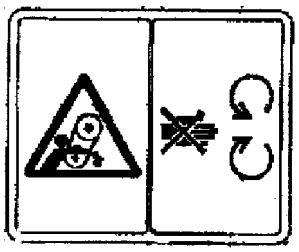

Inside Belt Covers (3)
Part No. 93-9356
Shield Missing – Do Not Use



On Fuel Tank
Part No. 93-9886
Unleaded Fuel Only

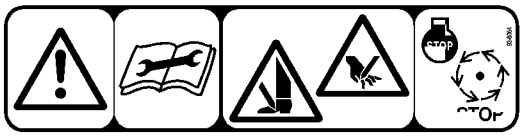

On Grass Shield
Part No. 93-8064
Keep Hands & Feet Away From Rotating Reel

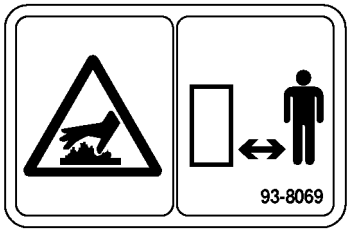

On Fuel Tank
Part No. 93-8069
Hot Surface



Inside Belt Cover
Part No. 93-7273
Replace Cover Before Operating

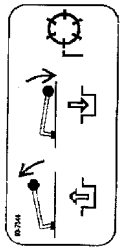

On Belt Cover
Part No. 93-7346
Reel Drive
Engage – Disengage

SPECIFICATIONS

Engine: Kawasaki, air cooled, overhead valve, 4 cycle, 3.7 horsepower, 2.36″ x 1.73″bore and stroke, 7.57 cu. in. (124 cc) displacement, 8.4:1 compression ratio, 11 ft. lbs. @ 1400 rpm. Electronic ignition, maximum noise suppression muffler. 2.64 quart fuel tank capacity.

Traction Drive: Engine to countershaft drive: two "A" section V-belts. Countershaft to differential drive: 5 mm pitch timing belt. Differential to drum drive: 8 mm pitch timing belt.

Differential: Peerless Series 100.

Transport Clutch: Belt idler

Brake: Band drum

Transport Tires: Quick detachable, 3.00/3.25 x 6, 32.5 tread width.

Traction Drum: Dimpled dual cast aluminum, 7.5" dia.

Controls: Engine has recoil starter, ON/OFF switch and choke. Handle has throttle lever, traction engage lever and service/ park brake lever. Mower has reel drive engage lever. Safety devices: neutral interlock system.

Handle: Loop style,1″ dia.

Reel Construction: 5″ diameter, 8 carbon steel blades welded to 6 stamped steel spiders.

Width of Cut: 26″

Height of Cut Range: 1/8″ to 1-1/4″

Clip: .23″

Reel Clutch: Jaw Type.

Bedknife and bedbar: Single edged high carbon steel bedknife, hardened to Rc 48-54. Fastened to machined, cast iron bedbar. 1/8″ bedknife (Part No. 93-9015), standard.

Grass Basket: Molded polyethylene.

Dimensions:

Width:	41″
Height:	41-1/2″
Length:	54-1/4″

Dry Weight: 229 lbs. with basket and Wiehle roller, without wheels or grooming reel.

Optional Equipment:

Light Kit	Model No. 04058
Grooming Reel Kit	Model No. 04110
Tournament Bedknife	Part No. 94-5885
Operator Presence Kit	Part No. 93-9010
Clip Kit	Part No. 65-9000
Height-of-Cut Bar	Part No. 94-9010
Full Roller	Part No. 95-0930
Wiehle Roller Scraper	Part No. 94-9012-01
High Altitude Jet (For altitudes of 3000 to 6000 ft.)	Part No. 98-8735
High Altitude Jet (for altitudes above 60000 ft.)	Part No. 98-8736

LOOSE PARTS CHART

Note: Use this chart as a checklist to ensure all parts necessary for assembly have been shipped. If any of these parts are missing, total set–up cannot be completed.

Description	Qty	Use
Handle Assembly Cable Ties	1 2	Mount handle to machine. Secure control cables to handles.
Transport Wheels R.H. Wheel Shaft L.H. Wheel Shaft	2 1 1	Mount wheels to machine.
Grass Basket	1	Install on machine.
Operator's Manual	1	Read before operating machine.
Engine Manual	1	Read before operating machine.
Parts Catalog	1	
Registration Card	1	Fill out and return to Toro.
Operator Video	1	View before operating machine.
CE Certificate	1	
Noise Certificate	1	

SET-UP INSTRUCTIONS

Note: Left and right sides of machine refer to normal operating position.

INSTALL AND ADJUST HANDLE

To Install Handle

1. Remove capscrew, washer and lockwasher from mounting pin on each side of mower, as shown in fig. 1.

2. Remove capscrews and locknuts securing bottom of handle arms to each side of mower, as shown in fig. 1.

3. Remove hair pin cotters and ring pins securing handle arms to rear of frame (Fig. 1).

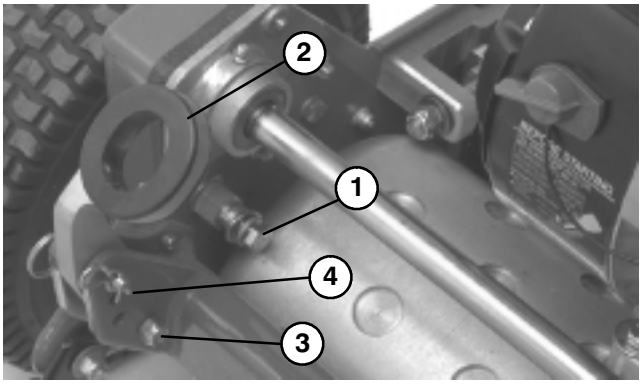

Figure 1

1. Mounting pins
2. Handle arms
3. Capscrew & locknut
4. Hair pin cotter & ring pin

4. Insert handle ends thru holes in handle arms and align holes with mounting pins (Fig. 1).

5. Squeeze handle ends inward and install on mounting pins (Fig. 2).

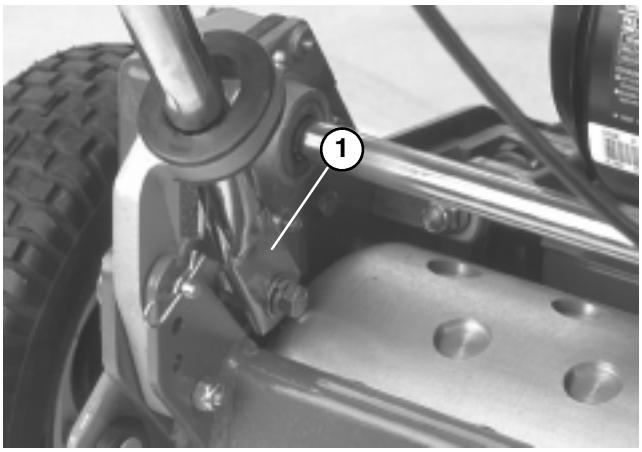

Figure 2

1. Handle end

6. Secure handle ends to mounting pins with capscrews, washers and lockwashers previously removed (Fig. 2).

7. Secure bottom of handle arms to each side of mower with capscrews and locknuts, previously removed (Fig. 2). Make sure bushings are installed in handle arm mounting holes. Do not overtighten capscrews as handle arms must pivot freely.

8. Secure handle arms to rear of frame with hair pin cotters and ring pins previously removed (Fig. 2).

9. Secure cables to handle with cable ties.

To Adjust Handle

1. Remove hairpin cotters from ring pins on each side of mower (FIg. 2).

2. While supporting handle, remove ring pins from each side and raise or lower handle to desired operating position. (Fig. 2).

3. Reinstall ring pins and hair pin cotters.

INSTALL TRANSPORT WHEELS

1. Push kick stand down with foot and pull up on handle to support mower on kick stand.

2. Apply #242 Loctite to threads of wheels shafts.

3. Thread right hand wheel shaft into drive pulley on right side of machine. Torque shaft to 65–75 ft-lb.

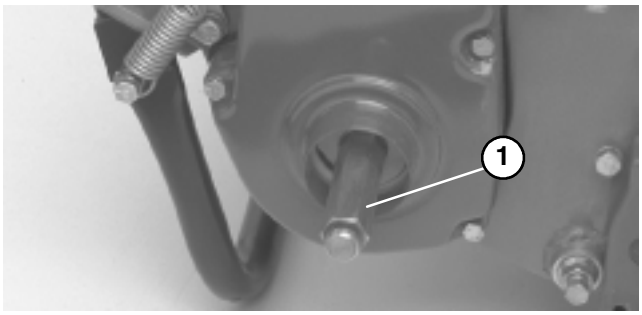

Figure 3

1. R.H. Wheel shaft

Note: The right hand wheel shaft has Left Hand Threads.

4. Apply Never–Seez to the exposed ends of axles and slide wheel onto axle (Fig. 4).

5. Pivot wheel locking clip away from center of wheel allowing wheel to slide farther onto axle (Fig. 4).

6. Rotate wheel back and forth until it slides completely onto axle and locking clip is secured in groove on axle shaft.

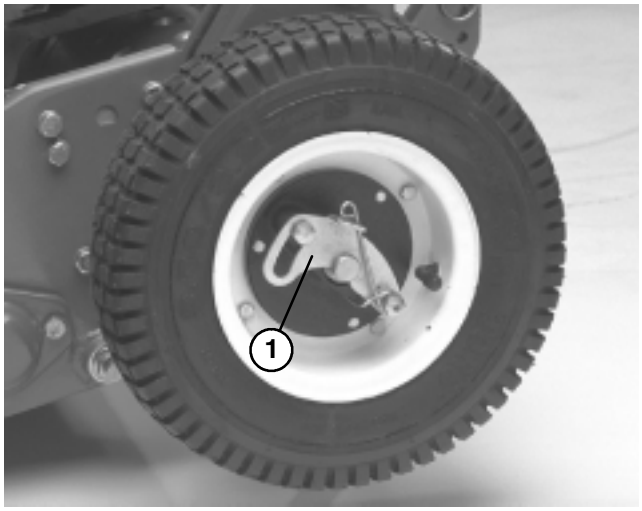

Figure 4

1. Locking clip

7. Repeat procedure on opposite side of machine.

8. Tires to be inflated to 12–15 psi.

PREPARATION BEFORE OPERATING

ADD ENGINE OIL

Crankcase must be filled with approximately16 ounces of proper viscosity oil before staring. The engine uses any high−quality oil having the American Petroleum Institute — API — "service classification" SC, SD, SE, SF, SG or SH. Oil viscosity — weight — must be selected according to ambient temperature. Temperature/ viscosity recommendations are:

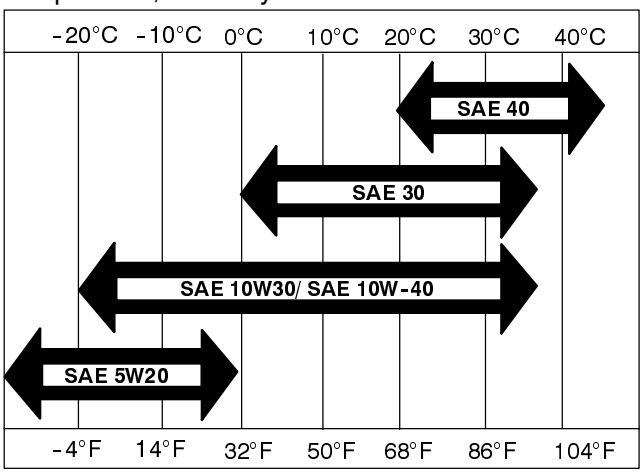

Note: Using multi grade oils (5W−20, 10W−30 and 10W−40) will increase oil consumption. Check oil level more frequently when using them.

1. Position mower so the engine is level and clean around oil level gauge (Fig. 5).

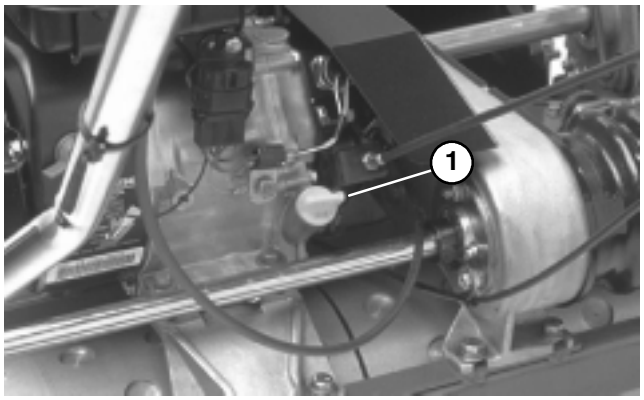

Figure 5
1. Oil level gauge

2. Remove gauge by rotating counterclockwise.

3. Wipe gauge clean and insert it into filler port. Then remove and check level of oil. Do not screw into port. If level is low, add only enough oil to raise level to filler opening.

Note: The TORO Company recommends that the oil level be checked each time mower is used or after every 5 operating hours. Initially, change oil after the first 20 hours of operation; thereafter, change oil after every 50 hours of operation. **More frequent oil changes are required in dusty or dirty conditions.**

FILL FUEL TANK

NOTE: NEVER USE METHANOL, GASOLINE CONTAINING METHANOL, GASOLINE CONTAINING MORE THAN 10% ETHANOL, GASOLINE ADDITIVES, PREMIUM GASOLINE OR WHITE GAS BECAUSE ENGINE FUEL SYSTEM DAMAGE COULD RESULT.

DANGER

Because gasoline is flammable, caution must be used when storing or handling it. Do not fill fuel tank while engine is running, hot or when machine is in an enclosed area. Vapors may build up and be ignited by a spark or flame source many feet away. DO NOT SMOKE while filling the fuel tank to prevent the possibility of an explosion. Always fill fuel tank outside and wipe up any spilled gasoline before starting engine. Use a funnel or spout to prevent spilling gasoline, and fill tank no higher than to bottom of filter screen. DO NOT OVER FILL. Store gasoline in a clean safety approved container and keep the cap on the container. Keep gasoline in a cool, well−ventilated place; never in an enclosed area such as a hot storage shed. To assure volatility, do not buy more than a 30 day supply of gasoline. Gasoline is a fuel for internal combustion engines; therefore do not use it for any other purpose. Since many children like the smell of gas, keep it out of their reach because the fumes are explosive and dangerous to inhale.

1. Clean around fuel tank cap and remove cap from tank (Fig. 6). Using unleaded gasoline, fill fuel tank no higher than to bottom of filter screen. **DO NOT OVER FILL.**



Figure 6
1. Fuel tank cap

2. Install fuel tank cap and wipe up any spilled gasoline.

PREPARATION BEFORE OPERATING

LEVELING REAR DRUM TO REEL

1. Position machine on a flat, level surface preferably a precision steel work plate. Place a 1/4″ x 1″ flat steel strip, approx. 29″ long, under reel blades and against front edge of bedknife to prevent the bedbar from resting on the work surface.

2. Raise front roller so only rear drum and reel are on surface.

3. Firmly press down on machine above reel so all reel blades contact the steel strip.

4. While pressing down on reel, slide a feeler gauge under one end of drum, then check other end of drum. If there is a gap between the drum and the work surface, greater than .010”, on either end, an adjustment to the drum is required, proceed to step 5. If the gap is less than .010” no adjustment is required.

5. Remove rear belt cover from right side of machine (Fig. 7) .

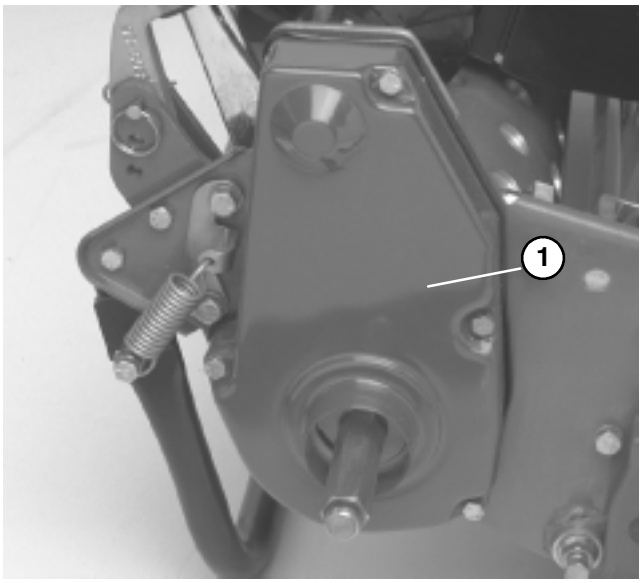

Figure 7
1. Traction drive belt cover

6. Rotate drive pulley until holes align with (4) roller bearing flange screws (Fig. 8).

7. Loosen (4) roller bearing screws and screw securing idler pulley. Raise or lower right side of roller assembly until the gap is reduced to less than .010”. Retighten the roller bearing screws. Adjust belt tension and tighten idler pulley mounting screw (Fig. 8).

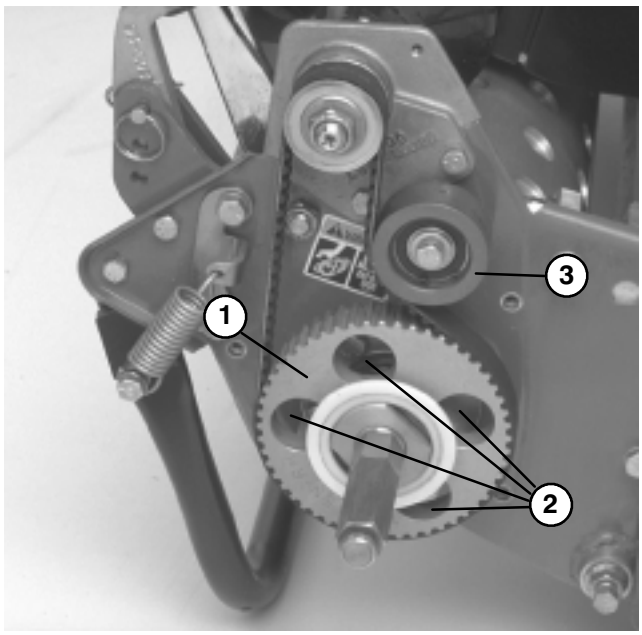

Figure 8
1. Drive pulley 2. Four holes 3. Idler Pulley

ADJUST BEDKNIFE TO REEL

Bedknife to reel adjustment is accomplished by loosening or tightening bedbar adjusting screws, located on top of mower.

1. Position machine on a flat, level work surface. Make sure reel contact is removed by turning bedbar adjusting screws counterclockwise (Fig. 9).

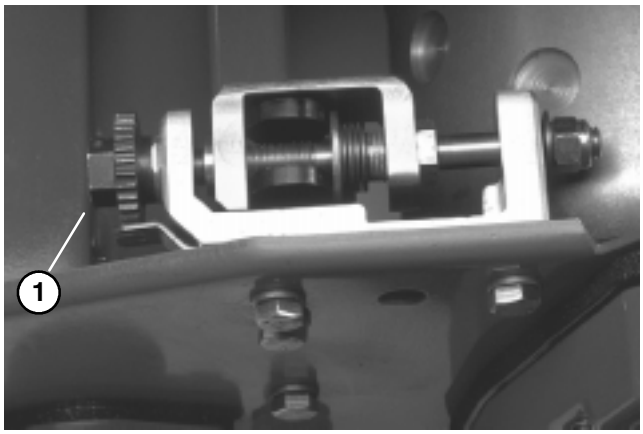

Figure 9
1. Bedbar adjusting screw

2. Tilt mower back on handle to expose bedknife and reel.

3. On one end of front side of reel, insert a long strip of newspaper between reel and bedknife (Fig. 10). While slowly rotating reel forward, turn bedbar adjusting screw, clockwise (on same end of reel, one click at a time, until paper is pinched lightly, when inserted from the front, parallel to the bedknife, which results in a slight drag when paper is pulled (Fig. 9).

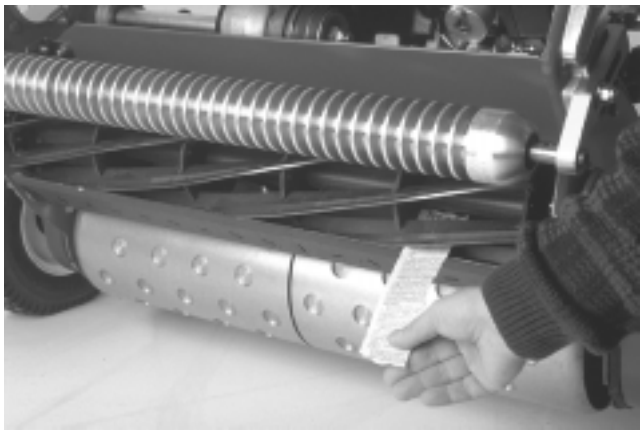

Figure 10

Note: Each time adjusting screw is rotated one click clockwise, bedknife moves .0007″ closer to reel. **DO NOT OVERTIGHTEN ADJUSTING SCREWS.**

4. Check for light contact at other end of reel using paper and adjust as required.

5. After adjustment is accomplished, check to see if reel can pinch paper when inserted from the front and cut paper when inserted at a right angle to the bedknife (Fig. 10). It should be possible to cut paper with minimum contact between the bedknife and the reel blades. Should excessive reel drag be evident (more than 7 inch pounds) it will be either necessary to backlap or re−grind the cutting unit to achieve the sharp edges needed for precision cutting (see Toro reel sharpening manual).

ADJUST HEIGHT OF CUT

1. Verify that rear roller is level and that bedknife to reel contact is correct. Tip mower back on handle to expose front and rear rollers and bedknife.

2. Loosen locknuts securing height-of-cut arms to height-of-cut brackets (Fig. 11).

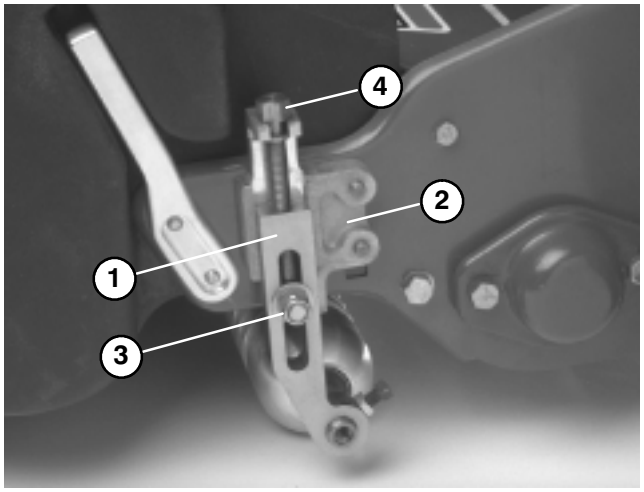

Figure 11

1. Height-of-cut arm
2. Height-of-cut bracket
3. Locknut
4. Adjusting screw

3. Loosen nut on gauge bar (Fig. 12) and set adjusting screw to desired height-of-cut. Distance between bottom of screw head and face of bar is height-of-cut.

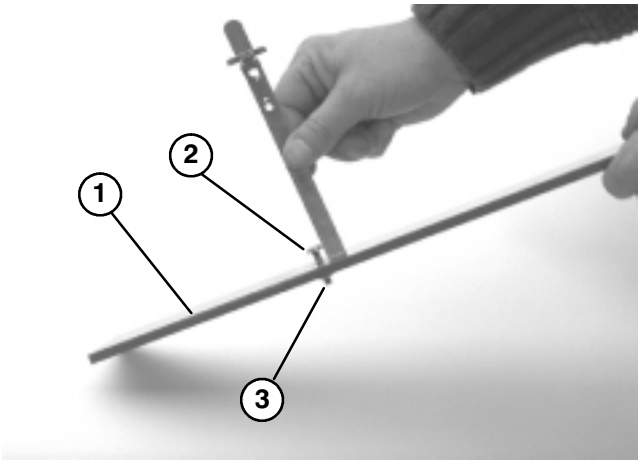

Figure 12

1. Gauge bar
2. Height adjusting screw
3. Nut

4. Hook screw head on cutting edge of bedknife and rest rear end of bar on rear roller (Fig. 13).

5. Rotate adjusting screw until roller contacts front of gauge bar. Adjust both ends of roller until entire roller is parallel to the bedknife.

IMPORTANT: When set properly, rear and front rollers will contact gauge bar and screw will be snug against bedknife. This assures height-of-cut is identical at both ends of bedknife.

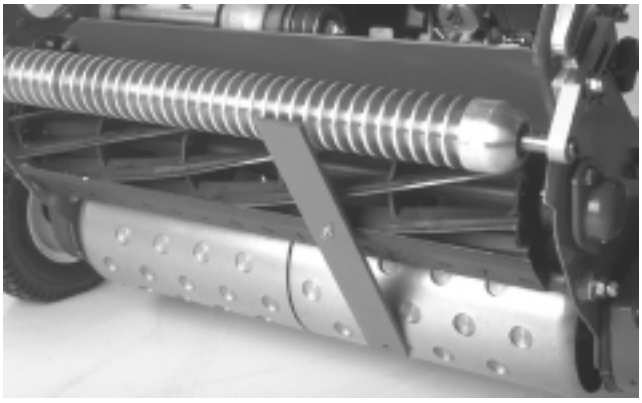

Figure 13

6. Tighten nuts to lock adjustment.

IMPORTANT: To avoid scalping on undulating turf, make sure roller supports are positioned rearward (roller closer to reel).

PREPARATION BEFORE OPERATING

NOTE: The front roller can be put in three different positions (Fig. 14) depending on the application and needs of the user.

- The front position is used when a groomer is installed.
- The middle position is used without a groomer.
- The third position can be used in extremely undulating turf conditions.

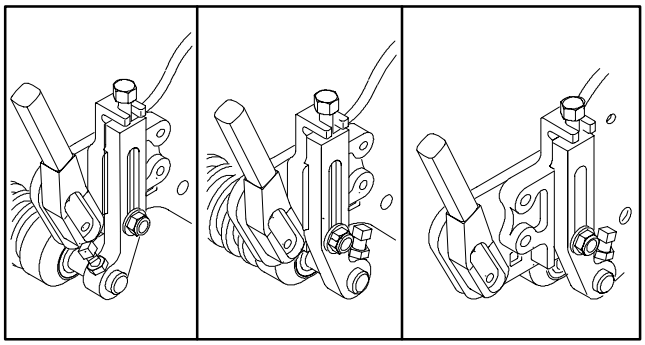

Figure 14

ADJUSTING GRASS SHIELD HEIGHT

Adjust shield to assure proper grass clipping discharge into basket.

1. Measure distance from top of front support rod to the front lip of the shield at each end of cutting unit (Fig. 15).

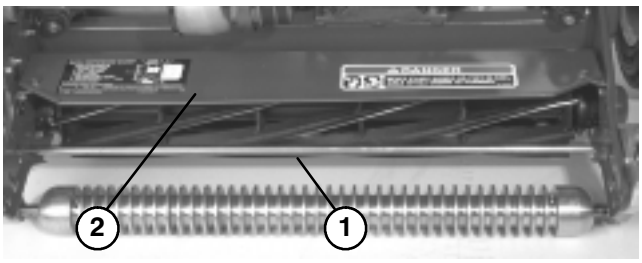

Figure 15
1. Support Rod 2. Shield

2. Height of shield from support rod for normal cutting conditions should be 4 inches. Loosen capscrews and nuts securing each end of shield to sideplate, adjust shield to correct height and tighten fasteners.

Note: Shield can be lowered for drier conditions (clippings fly over top of basket) or raised to allow for heavy wet grass conditions (clippings build up on rear of basket).

ADJUSTING CUT–OFF BAR

Adjust cut–off bar to assure clippings are cleanly discharged from the reel area:

1. Loosen screws securing top bar (Fig. 16) to cutting unit. Insert .060 inch feeler gauge between top of reel and bar and tighten screws. Assure bar and reel are equal distance apart across complete reel.

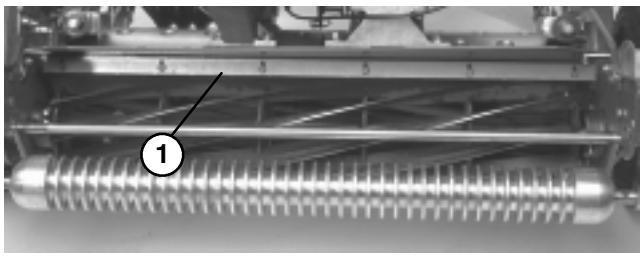

Figure 16
1. Cut–off bar

Note: Bar is adjustable to compensate for changes in turf conditions. Bar should be adjusted closer to reel when turf is extremely wet. By contrast, adjust bar further away from reel when turf conditions are dry. Bar should be parallel to reel to assure optimum performance and should be adjusted whenever shield height is adjusted or whenever reel is sharpened on a reel grinder.

INSTALL GRASS BASKET

1. Grasp basket by top lip and slide onto the basket mounting rods (Fig. 17).

2. When cutting in higher heights-of-cut, basket may be lowered by removing each basket mounting rod and re–installing on opposite side of machine.

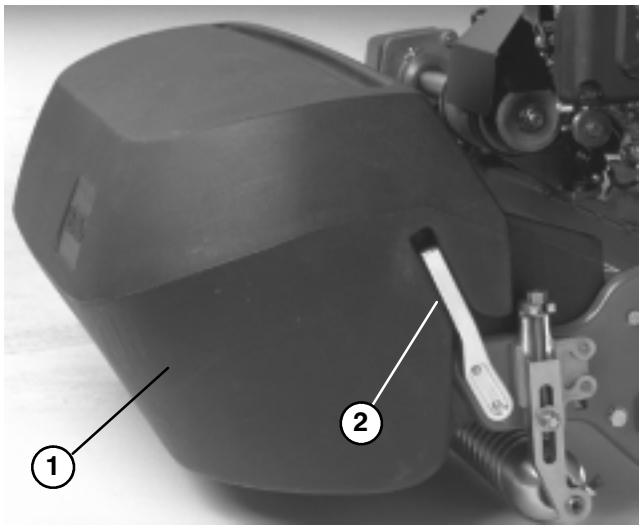

Figure 17
1. Grass basket
2. Basket Mounting Rod

CHECK INTERLOCK SWITCH OPERATION

1. Place traction lever into ENGAGE position and engine controls in starting position.

2. Attempt to start engine. Engine should not start. If engine starts, the interlock switch needs service. Correct problem before operating. Refer to Adjusting Interlock Switch.

CONTROLS

Traction Engagement Lever (Fig. 18) — Located on front right side of control panel. Lever has two positions: NEUTRAL and FORWARD. Pushing lever forward engages traction drive.

Operator Presence Control (Optional) (Fig. 18) — Located on rear of handle. Push control lever forward to engage. Lever must be engaged before engaging traction engagement lever or engine will stop.

Service/Park Brake (Fig. 18) — Located on left front side of control panel. Use brake to slow or stop machine. The brake can also be used as a parking brake. Pulling the lever back over center will set the parking brake. Brake must be released before traction drive is engaged.

Throttle Control (Fig. 18) — Located on rear right side of control panel. Lever connects to and operates throttle linkage to carburetor. Engine speed can be varied from 1600 RPM to 3600 RPM.

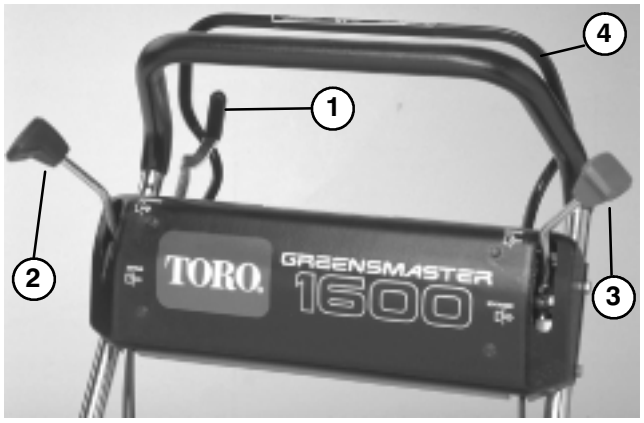

Figure 18

1. Throttle control
2. Traction engagement lever
3. Service / park brake
4. Operator Presence Control (Optional)

Reel Drive Engagement Lever (Fig. 19) — Located on right front corner of machine. Lever has two positions: ENGAGE and DISENGAGE. Pull up on lever to engage reel or push down on lever to disengage reel.

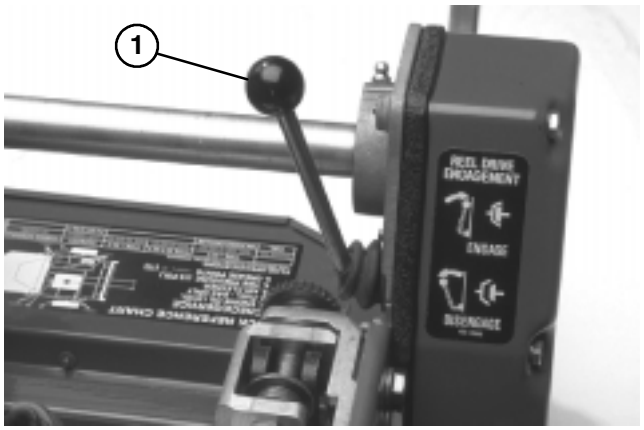

Figure 19

1. Reel drive engagement lever

Choke Lever (Fig. 20) — Located on left front of engine. Lever has two positions: RUN and CHOKE. Move lever to CHOKE position when starting a cold engine. After engine starts move lever to RUN position.

Fuel Shut-off Valve (Fig. 20) — Located on left front of engine. Valve has two positions: CLOSED and OPEN. Move lever to closed position when storing or transporting machine. Open valve before starting engine.

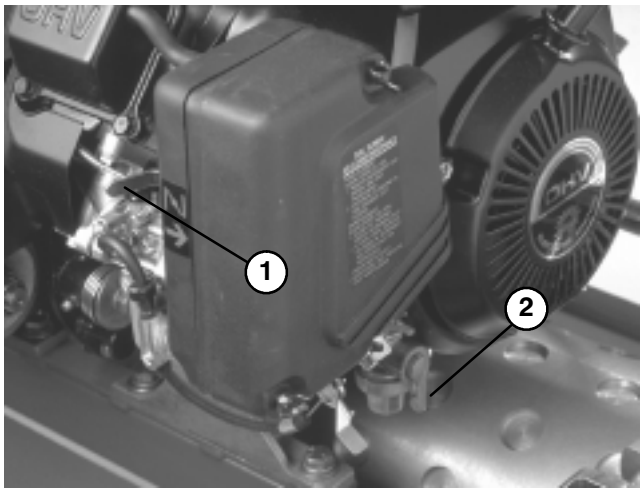

Figure 20

1. Choke lever
2. Fuel shut off valve

Recoil Starter (Fig. 21) — Pull recoil starter handle to start engine.

On/Off Switch (Fig. 21) — Located on rear of engine. Move switch to ON position to start engine and Off to stop engine.

Kick Stand (Fig. 21) — Mounted to rear of machine, kickstand is used to raise rear of machine for installation or removal of transport wheels.

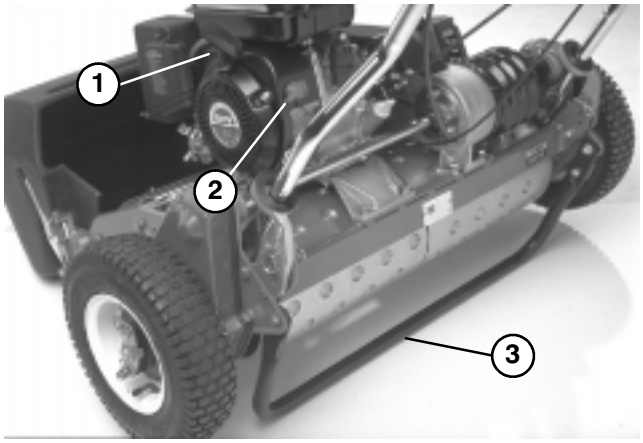

Figure 21

1. Recoil starter
2. On/Off Switch
3. Kickstand

STARTING AND STOPPING

Note: Make sure spark plug wire is installed on spark plug.

1. Make sure traction (Fig. 18) and reel drive (Fig. 19) levers are in DISENGAGED position.

Note: Engine will not start if traction lever is in the engaged position.

2. Open fuel shut-off valve on engine (Fig. 20).

3. Move ON / OFF switch (Fig. 21) to ON position.

4. Move throttle control (Fig. 18) to FAST position.

5. Move choke lever (Fig. 20) to half-open position when starting a cold engine. Choke may not be required when starting a warm engine.

6. Pull recoil starter handle out until positive engagement results, then pull vigorously to start engine. Close choke as engine warms up.

Note: Do not pull recoil rope to its limit or let go of starter handle when rope is pulled out because rope may break or recoil assembly may be damaged.

7. To stop engine during operation, move traction and reel drive controls to DISENGAGED position, throttle control to SLOW and ON/OFF switch to OFF.

8. Pull spark plug wire off spark plug to prevent the possibility of accidental starting before storing machine.

9. Close fuel shut-off valve before storing or transporting mower in a vehicle.

OPERATING INSTRUCTIONS

TRANSPORT OPERATION

1. Push kick stand down with foot and pull up on handle to raise rear of mower and install transport wheels.

2. To release kickstand, pull up on handle, push mower forward and then lower rear of mower onto transport wheels.

3. Assure traction and reel drive controls are in DISENGAGE position and start engine.

4. Set throttle control to SLOW, tip front of machine up gradually engage traction drive and slowly increase engine speed.

5. Adjust throttle to operate mower at desired ground speed and transport mower to desired destination.

PREPARING TO MOW

1. Return traction control lever to DISENGAGE, throttle to SLOW and stop engine.

2. Push kickstand down with foot and pull up on handle to raise wheels off the ground.

3. Push locking clips on wheels out of grooves in shafts and slide wheels off shafts.

4. Release kickstand.

MOWING OPERATION

Proper use of the Greensmaster 1600 provides the smoothest turf cutting available. The fundamental suggestions given will provide the utmost performance from your mower.

IMPORTANT: Excessive operation of the cutting unit with the absence of grass clippings (lubricant) can damage the cutting unit.

PRIOR TO MOWING

Be sure the mower is carefully adjusted and is set evenly on both sides of the reel. Improper mower adjustment is magnified many times over in the appearance of the clipped turf. Remove all foreign objects from turf prior to mowing. Make sure everyone, especially children and pets, are clear of the work area.

METHOD OF MOWING

The Greens should be mowed in a straight back and forth direction across the green. Avoid circular mowing or turning the mower on greens areas since scuffing may occur. Turning the mower should be done off the green proper by raising the cutting reel (pushing the handle down) and turning on the traction drum. Mowing should be done at a normal walking pace. Fast speeds saves very little time and will result in an inferior mowing job.

CONTROL OPERATION

To operate the controls while mowing:

1. Start the engine, set the throttle at reduced speed, push down on handle to raise cutting unit, move traction lever to ENGAGED position and transport mower onto collar of green.

OPERATING INSTRUCTIONS

2. Move traction lever to DISENGAGED position and ENGAGE reel drive lever.

3. Move traction lever to ENGAGED position, increase throttle speed until the mower is traveling at the desired ground speed, drive the mower out onto the green area, lower the front of the mower down and commence operation.

AFTER MOWING

1. Drive off green, move traction control lever to DISENGAGE, stop the engine and push the reel drive lever into DISENGAGED position.

2. Empty the grass catcher of clippings, install grass catcher and commence transport operation, refer to Transport Operation.

LUBRICATION

GREASE FITTINGS

The (13) grease fittings on the mower should be greased at least every 25 hours. Lubricate using No. 2 multi–purpose lithium base grease. A hand operated grease gun is recommended for best results.

1. Wipe each grease fitting with a clean rag.

2. The grease fitting locations are: (2) on Front Roller (Fig. 22), (2) on reel bearings (Fig. 22), (2) on Drum Axles (Fig. 23), (3) on Differential (Fig. 23), (2) on Reel Countershaft Bearings (Fig. 24) and (2) on Belt Idler Pivots (Fig. 25).

IMPORTANT: Do not apply too much pressure or grease seals will become permanently damaged.

3. Wipe off excess grease.

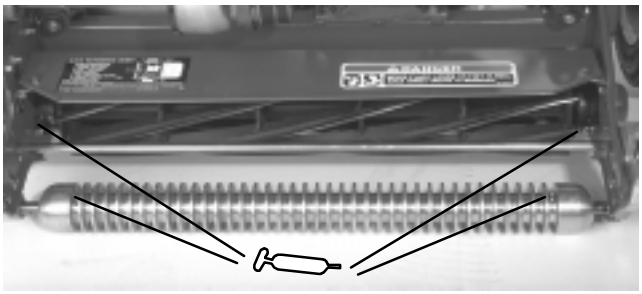

Figure 22

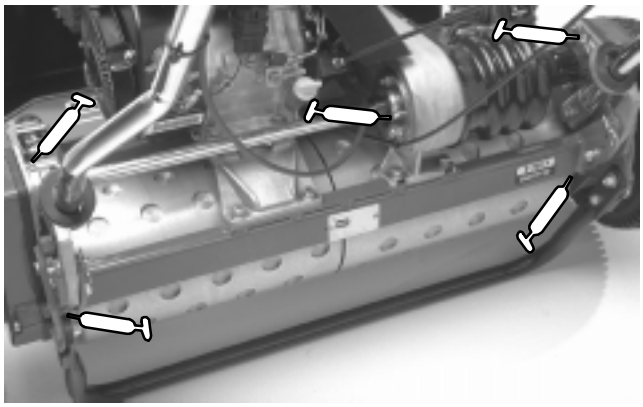

Figure 23

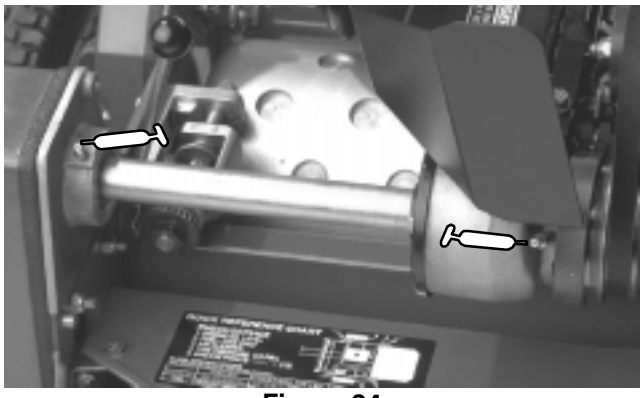

Figure 24

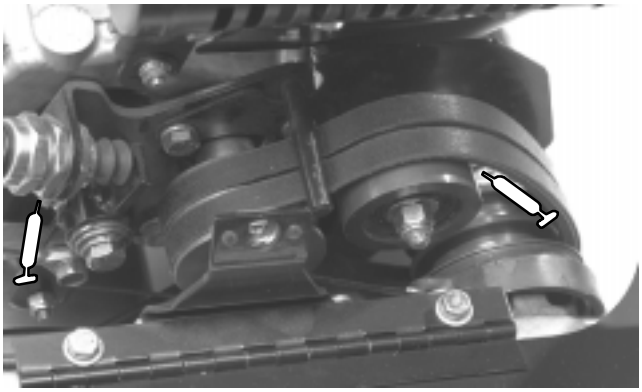

Figure 25

DAILY MAINTENANCE CHECKLIST

Daily Maintenance: (duplicate this page for routine use)
Check proper section of Operator's Manual for fluid specifications

Maintenance Check Item ➧	**Daily Maintenance Check For Week Of** _____						
	MON	TUES	WED	THURS	FRI	SAT	SUN
✓ Safety Interlock Operation							
✓ Park Brake Operation							
✓ Fuel Level							
✓ Engine Oil Level							
✓ Air Filter							
Clean Engine Cooling Fins							
✓ Unusual Engine Noises							
✓ Unusual Operating Noises							
✓ Reel-to-Bedknife Adjustment							
✓ Height-of-Cut Adjustment							
Lubricate All Grease Fittings[1]							
Touch-up Damaged Paint							

[1]=Immediately **after every** washing, regardless of the interval listed.

Notation for areas of concern: Inspection performed by_____

Item	Date	Information
1		
2		
3		
4		
5		
6		
7		
8		

MAINTENANCE

CAUTION

Shut engine off, wait for all moving parts to stop and disconnect spark plug wire (Fig. 26) before performing any maintenance procedures on the mower.

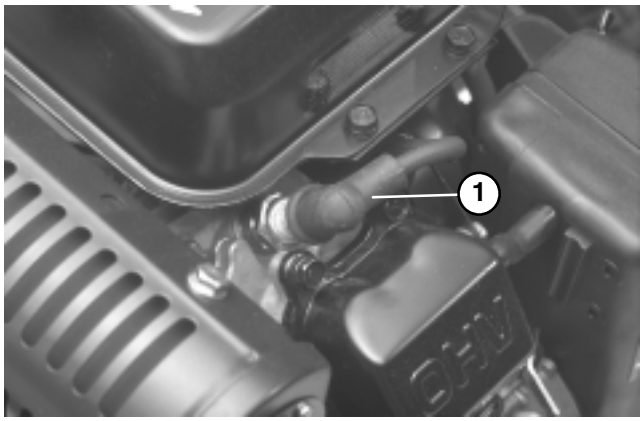

Figure 26
1. Spark Plug

ENGINE CARE

The Engine Manual supplied with your Greensmaster 1600 provides the maintenance procedures for service of the air cleaner, oil requirements, ignition components, etc.

ENGINE OIL

The TORO Company recommends that the oil level be checked each time mower is used or after every 5 operating hours. Initially, change oil after the first 8 hours of operation; thereafter, change oil after every 50 hours of operation. **More frequent oil changes are required in dusty or dirty conditions.**

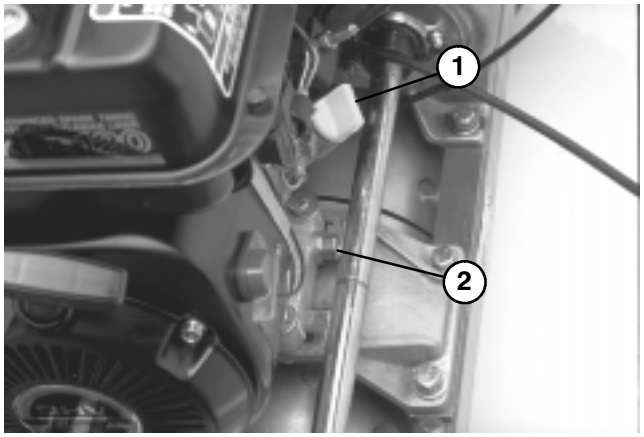

Figure 27
1. Oil level gauge
2. Drain plug

To check oil level:

1. Position mower so the engine is level and clean around oil level gauge (Fig. 27).

2. Remove oil level gauge by rotating it counterclockwise.

3. Wipe oil level gauge clean and insert it into filler port. Do not screw into port. Then remove and check level of oil. If level is low, add only enough oil to raise level to filler opening.

4. Reinstall oil level gauge and wipe up any spilled oil.

To change oil:

1. Start and run engine for a few minutes to warm the engine oil.

2. Place a drain pan at rear of machine under drain plug (Fig. 27). Remove drain plug.

3. Push down on handle to tip mower and engine backward, allowing more oil to run into drain pan.

4. Reinstall drain plug and refill crankcase with proper oil: refer to Check Oil Level.

SERVICING AIR CLEANER

Normally, clean air cleaner after every 25 operating hours. More frequent cleaning is required when mower is operated in dusty or dirty conditions.

1. Make sure wire is off spark plug.

2. Remove wing nuts securing air cleaner cover to air cleaner and remove cover. Clean cover thoroughly (Fig. 28).



Figure 28
1. Air cleaner cover

3. If foam element is dirty, remove it from paper element (Fig. 29). Clean thoroughly.

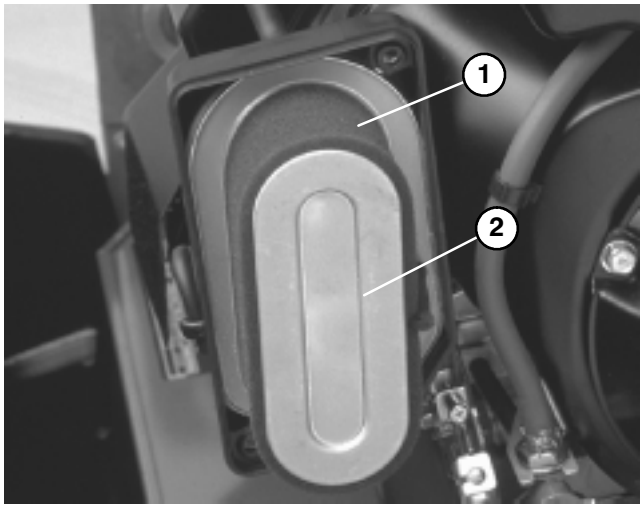

Figure 29
1. Foam element 2. Paper element

A. WASH foam element in a solution of liquid soap and warm water. Squeeze to remove dirt, but do not twist because foam may tear.

B. DRY by wrapping in a clean rag. Squeeze rag and foam element to dry.

C. SATURATE element with clean engine oil. Squeeze element to remove excess oil and to distribute oil thoroughly. An oil damp element is desirable.

4. When servicing foam element, check condition of paper element. Clean or replace as required.

5. Reinstall foam element, paper element and air cleaner cover.

IMPORTANT: Do not operate engine without air cleaner element because extreme engine wear and damage will likely result.

REPLACING SPARK PLUG

Use an **NGK BPR 5ES** spark plug or equivalent. Correct air gap is 0.028″–0.032.″ Remove plug after every 100 operating hours and check its condition.

1. Pull wire off spark plug.

2. Clean around spark plug and remove plug from cylinder head (Fig. 30)

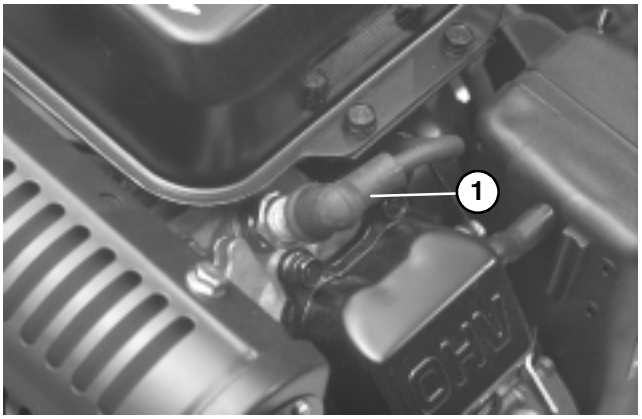

Figure 30
1. Spark plug

IMPORTANT: Replace a cracked, fouled, or dirty spark plug. Do not sand blast, scrape, or clean electrodes because engine damage could result from grit entering cylinder.

3. Set air gap at 0.028″–0.032″ (Fig. 31). Install correctly gapped spark plug and tighten firmly to 17 ft-lb.

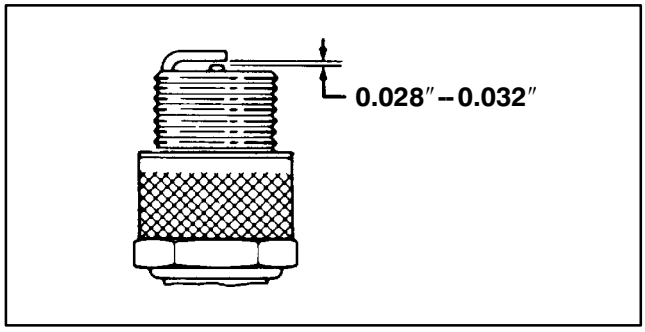

Figure 31

CLEANING FUEL FILTER

Initially, clean fuel filter after the first 20 hours of operation; thereafter clean after every 50 hours operation.

1. Close fuel shut off valve and unscrew bowl from filter body (Fig. 32).

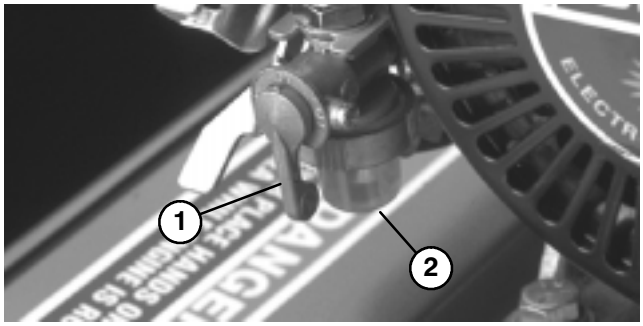

Figure 32
1. Shut off valve
2. Bowl

2. Clean bowl and filter in clean gasoline and reinstall.

ADJUSTING BELTS

Make sure belts are properly tensioned to assure proper operation of the machine and unnecessary wear. Check belts frequently.

Reel Drive belt (Fig. 34)

1. Check tension by depressing belt at mid span of pulleys with 4 ± 1 lbs. of force. Belt should deflect 1/4 in. If deflection is incorrect, proceed to next step. If correct, continue operation.

2. To adjust belt tension:

A. Remove belt cover mounting screws and belt cover to expose belt (Fig. 33).

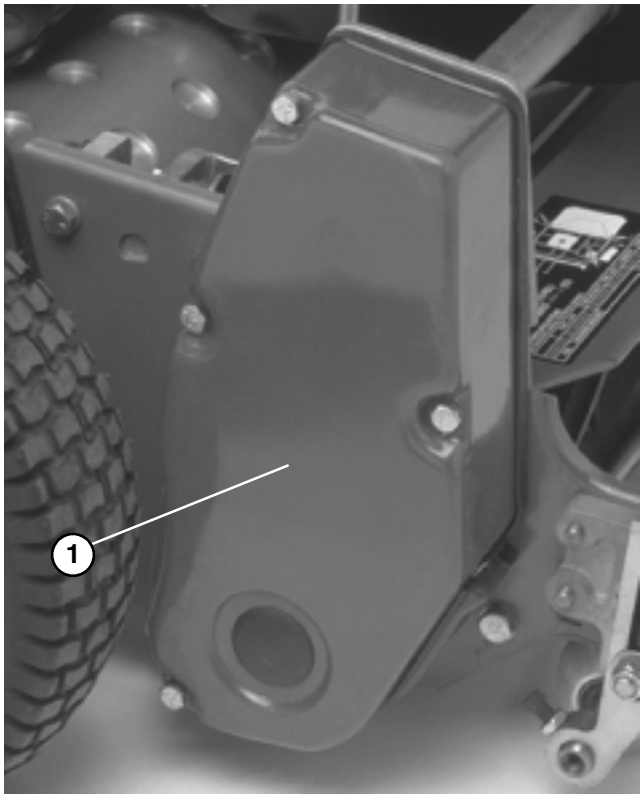

Figure 33
1. Reel drive belt cover

B. Loosen idler pulley mounting nut and pivot the idler pulley clockwise against the backside of the belt until desired belt tension is attained. **DO NOT OVER TENSION BELT.**

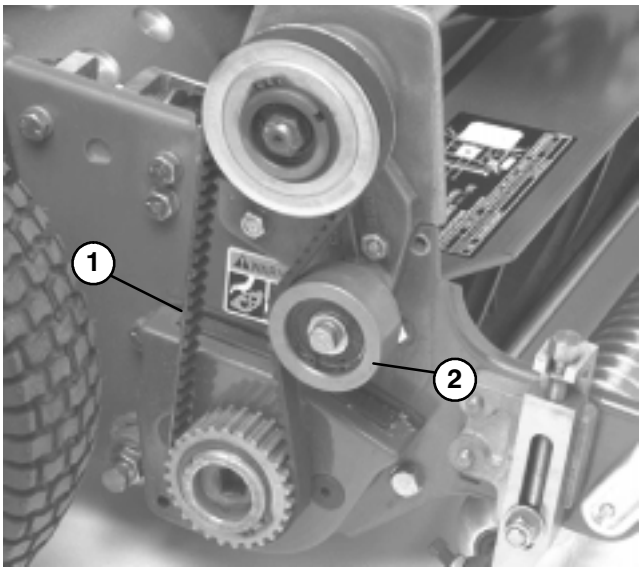

Figure 34
1. Reel drive belt 2. Idler pulley

C. Tighten nut to lock adjustment.

D. Reinstall belt cover by placing the cover in position. While maintaining a slight gap between the cover seal and the side plate, install each mounting bolt until the threads engage in the insert. The gap will allow visual alignment of the bolt to the threaded insert. After all bolts are installed, tighten until the stand offs inside the cover contact the side plate. Do not overtighten.

Traction Drive belt (Fig. 36)

1. Check tension by depressing belt at mid span of pulleys with 4 ± 1 lbs. of force. Belt should deflect 1/4 in. If deflection is incorrect, proceed to next step. If correct, continue operation.

2. To adjust belt tension:

A. Remove belt cover mounting screws and belt cover to expose belt (Fig. 35).

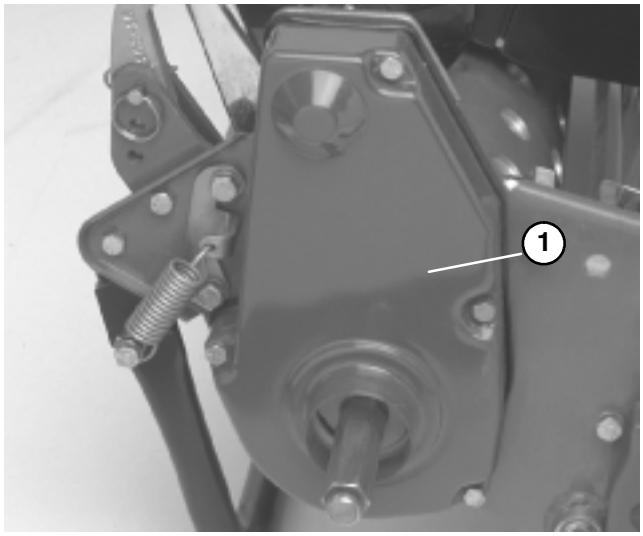

Figure 35
1. Traction drive belt cover

B. Loosen idler pulley mounting nut and pivot the idler pulley clockwise against the backside of the belt until desired belt tension is attained. **DO NOT OVER TENSION BELT.**

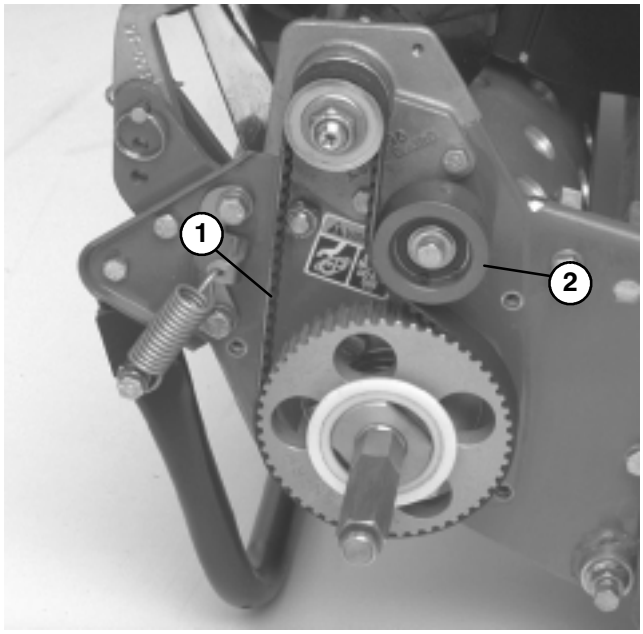

Figure 36
1. Traction drive belt 2. Idler pulley

C. Tighten nut to lock adjustment.

D. Reinstall belt cover by placing the cover in position. While maintaining a slight gap between the cover seal and the side plate, install each mounting bolt until the threads engage in the insert. The gap will allow visual alignment of the bolt to the threaded insert. After all bolts are installed, tighten until the stand offs inside the cover contact the side plate. Do not overtighten.

Differential belt (Fig. 37)

1. Check tension by depressing belt at mid span of pulleys with 5 ± 1 lbs. of force. Belt should deflect 1/4 in. If deflection is incorrect, proceed to next step. If correct, continue operation.

2. To adjust belt tension:

A. Remove capscrews securing front and rear sections of differential cover to differential housing and slide cover sections away to expose belt.

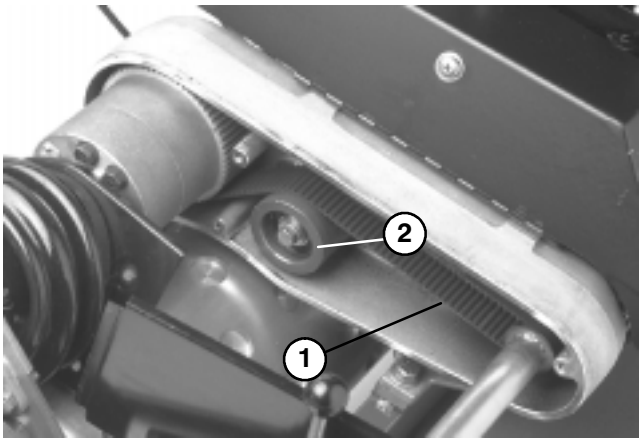

Figure 37
1. Differential belt 2. Idler pulley

B. Loosen idler pulley mounting nut and pivot the idler pulley clockwise against the backside of the belt until desired belt tension is attained. **DO NOT OVER TENSION BELT.**

C. Tighten nut to lock adjustment.

D. Reinstall belt cover by placing the cover in position. While maintaining a slight gap between the cover seal and the side plate, install each mounting bolt until the threads engage in the insert. The gap will allow visual alignment of the bolt to the threaded insert. After all bolts are installed, tighten until the stand offs inside the cover contact the side plate. Do not overtighten.

Primary V-Belts (Fig. 38–39)

1. To adjust belt tension on primary V-belts, first check adjustment of traction control. Refer to Adjusting Traction Control. If unable to attain the 3–5 lbs. force required in adjusting traction control, proceed to next step.

2. Loosen retainer securing V-belt cover and pivot cover open.

3. To increase belt tension, loosen engine mounting bolts and move engine backwards in slots. **DO NOT OVER TENSION BELTS.** Tighten mounting bolts.

Note: The distance between the centers of the driver and driven pulleys should be approximately 5.18″ after new V-belts are installed.

4. After tensioning primary V-belts, check alignment of engine output shaft pulley and countershaft pulley with a straight edge. If pulleys re misaligned, loosen screws securing engine mounting base to mower frame and slide engine from side to side until pulleys are aligned within .030″.

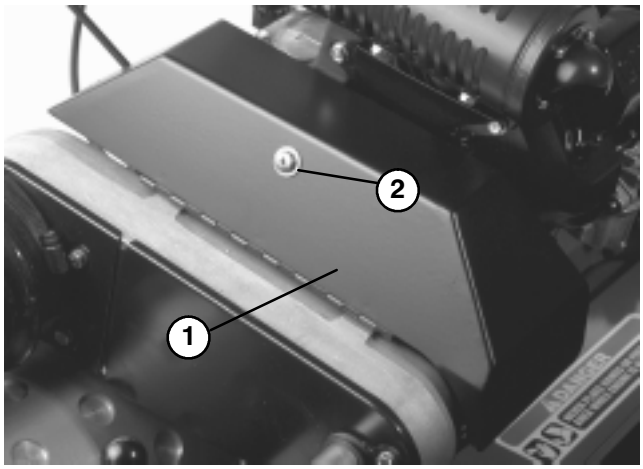

Figure 38
1. V-belt cover 2. Retainer

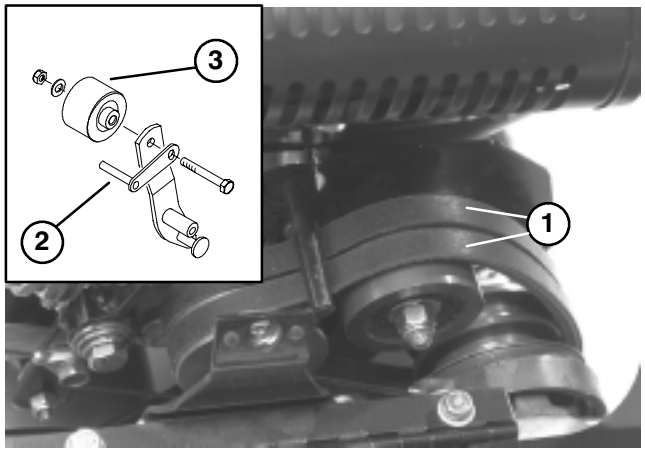

Figure 39
1. Primary V-belts
2. Belt guide
3. Idler pulley

5. Tighten mounting screws and recheck alignment.

6. To push or pull machine easier without starting the engine, adjust the belt guide (Fig. 39, inset) as follows:

A. Engage clutch.

B. Loosen capscrew securing idler pulley and belt guide to idler arm.

C. Rotate belt guide clockwise until a gap of approximately .06″ is obtained between guide finger and backside of drive belts.

D. Tighten capscrew and lock nut securing idler pulley and belt guide to idler arm. The .06″ dimension is a starting recommendation the actual gap may vary per machine.

7. Close cover and secure retainer.

DIFFERENTIAL BELT REPLACEMENT

1. Remove capscrews securing traction drive and reel drive belt covers to right side plate and remove belt covers.

2. Loosen idler pulley mounting nut, on each idler pulley and pivot each idler pulley counterclockwise away from the backside of each belt to release belt tension. Remove belts.

3. Remove capscrews securing front and rear sections of differential cover to differential housing and slide cover sections away to expose belt (Fig. 40).

4. Loosen idler pulley mounting nut, on differential idler pulley and pivot idler pulley counterclockwise away from the backside of belt to release belt tension.

5. Cut old belt and remove from pulleys.

6. Remove (2) capscrews and locknuts securing front clutch housing to side plate (Fig. 40). Rotate housing 180°, so bottom of housing points upward.

7. Remove (2) capscrews and locknuts securing right rear bearing housing to side plate (Fig. 40). Rotate housing 180°, so bottom of housing points upward.

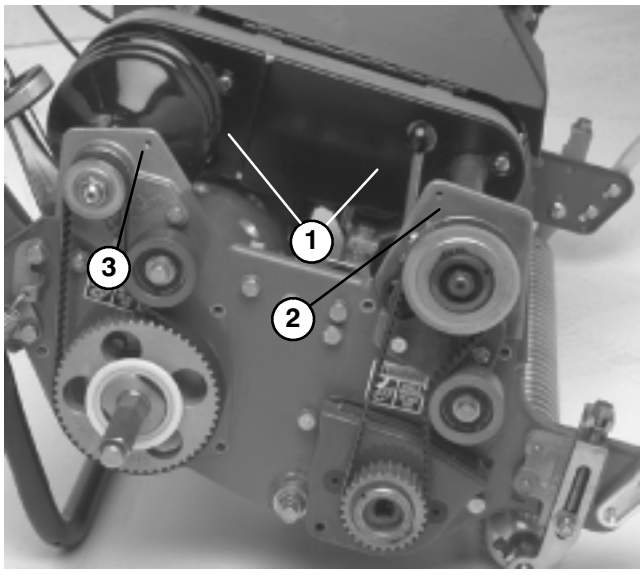

Figure 40
1. Differential cover sections
2. Front clutch housing
3. Right rear bearing housing

8. Slide new belt over rotated housing covers, differential cover sections and onto differential pulleys. Make sure idler pulley is positioned against backside of belt.

9. Rotate both housings back into upright position and secure to sideplate with capscrews and nuts previously removed.

10. Adjust differential belt tension, refer to Adjusting Differential belt.

11. Adjust belt tension on traction drive and reel drive belts, refer to Adjusting Traction Drive and Reel Drive belts.

12. Reinstall differential, traction drive and reel drive covers.

ADJUSTING TRACTION CONTROL

If traction control does not engage or it slips during operation, an adjustment is required.

1. Move traction control to DISENGAGED position.

2. Loosen retainer securing v-belt cover and pivot cover open (Fig. 38).

3. To increase cable tension, loosen front cable jam nut and tighten back cable jam nut (Fig. 41) until a force of 3–5 lbs. is required to engage traction control. Force to be measured at control knob.

4. Tighten front cable jam nut.

5. Close cover and secure retainer.

5. Check control operation.

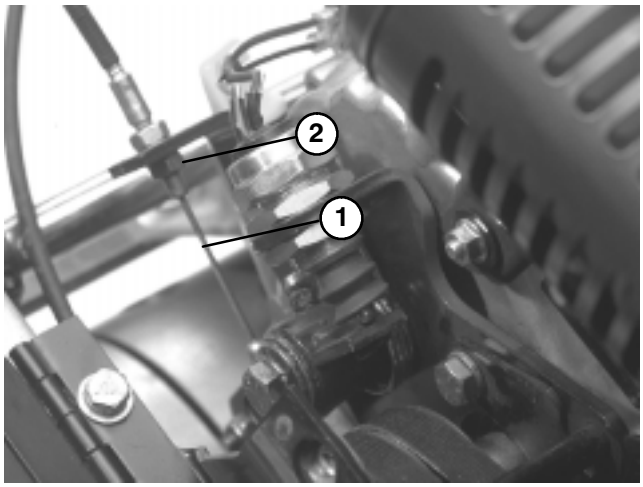

Figure 41
1. Traction cable
2. Front jam nut

ADJUSTING SERVICE / PARK BRAKE

If service/park brake slips when operated, an adjustment is required.

1. Move service/park brake lever to OFF position.

2. Loosen retainer securing v-belt cover and pivot cover open (Fig. 42).

3. To increase cable tension, loosen front cable jam nut and tighten back cable jam nut (Fig. 41) until a force of 3–5 lbs. is required to engage brake. Force to be measured at lever knob. Do not over adjust, so brake band drags.

4. Close cover and secure retainer.

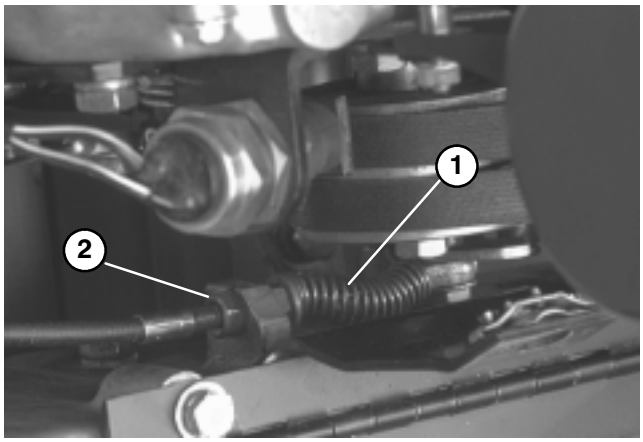

Figure 42
1. Service / park brake cable
2. Front jam nut

ADJUSTING INTERLOCK SWITCH

Use the following procedure should the switch need adjustment or replacement.

1. Make sure the engine is OFF and traction lever is DISENGAGED.

2. Loosen (2) switch mounting nuts (Fig. 43) and move switch until switch plunger is depressed .18 ± .06″ (switch closed).

2. Tighten switch mounting nuts.

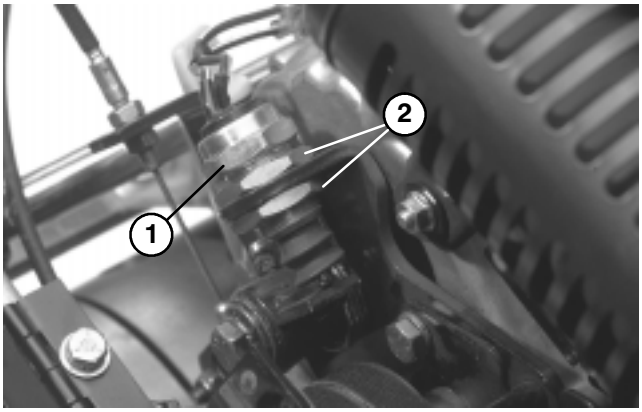

Figure 43
1. Interlock switch
2. Mounting nuts

3. Engage traction lever and verify that the switch plunger is depressed no more than .06″ (switch open). Readjust as required.

SERVICING BEDBAR

REMOVAL

1. Turn bedbar adjuster screw, counterclockwise, until channel bottoms out in adjuster frame (Fig. 44).

2. Using a 7/8″ standard wrench, back out the spring tension screw, until the trust washer is no longer tensioned against the bedbar (Fig. 44).

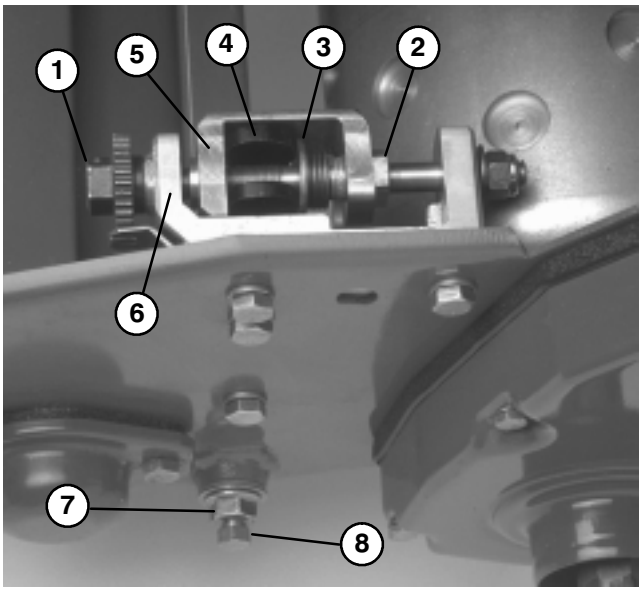

Figure 44
1. Bedbar adjusting screw
2. Spring tension screw
3. Thrust Washer
4. Bedbar
5. Channel
6. Adjuster frame
7. Jam nut
8. Bedbar bolt

3. On each side of the machine, loosen the jam nut securing the bedbar bolt (Fig. 44).

4. Remove each bedbar bolt allowing bedbar to be pulled downward and removed from machine. Account for (2) nylon and (2) stamped steel washers on each end of bedbar (Fig. 44).

ASSEMBLY

1. Install bedbar, positioning mounting ears between thrust washer and channel on bedbar adjuster.

2. Secure bedbar to each side plate with bedbar bolts (flange nuts on bolts) and (8) washers. A nylon washer is to be positioned on each side of side plate boss. Place a steel washer outside each of the nylon washers. Torque bolts to 240–320 in-lb. Tighten flange nuts until thrust washers just rotate freely.

3. Adjust bedbar, refer to Adjust Bedknife to Reel.

REEL BACKLAPPING

1. Remove plug in right reel drive cover (Fig. 45)

2. Insert a 1/2″ socket extension, connected to back lapping machine, into the square hole in the center of reel pulley to backlap.

3. Backlap according to procedure in TORO Sharpening Reel and Rotary Mowers Manual, Form No. 80-300 PT.

CAUTION

Be careful when lapping the reel because contact with reel or other moving parts can result in personal injury.

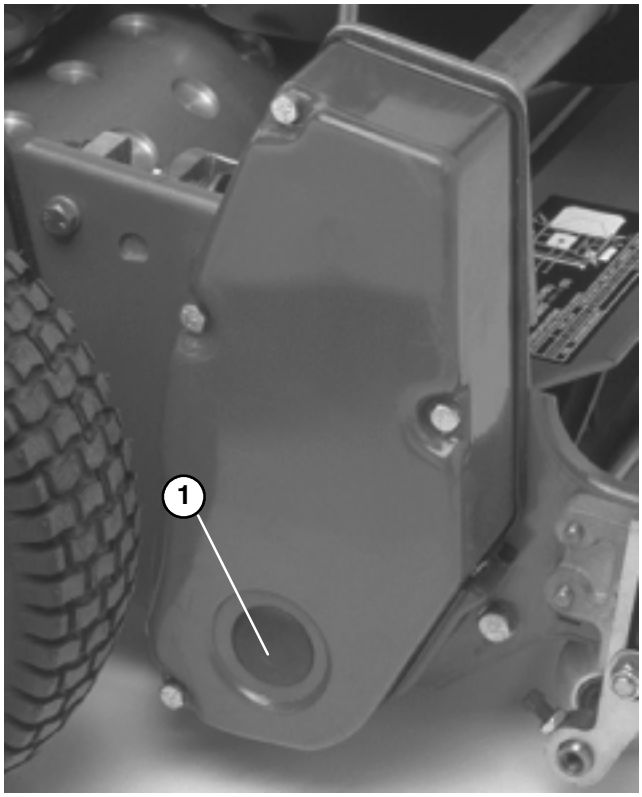

Figure 45
1. Cover plug

Note: For a better cutting edge, run a file across the front face of the bedknife when the lapping operation is completed. This will remove any burrs or rough edges that may have built up on the cutting edge.

4. Reinstall plug in cover when backlap operation is completed.

DANGER

Under no circumstances use a short handled paint brush for backlapping. 29−9100 Handle assembly complete or individual parts are available from your local Authorized TORO Distributor.

MAINTENANCE SCHEDULE

Minimum Recommended Maintenance Intervals

Maintenance Procedure	Maintenance Interval & Service
Service Air FIlter Pre–Cleaner Lubricate All Grease Fittings Check for Loose Fasteners	Every 25hrs
Clean Fuel Filter and Sediment Bowl Adjust Traction Drive Belts † Change Engine Oil	Every 50hrs
Check Cut–Off Bar Adjustment Service Air Cleaner Filter	Every 100hrs
Clean Combustion Chamber Replace Spark Plug Adjust Valves and Torque Head Bolts	Every 200hrs
† Initial break in at 8 hours	
Replace All Interlock Switches	**Annual Recommendations:** *Item listed is recommended every 2 years*

(See Operator's and Service Manual for specifications and procedures)

IDENTIFICATION AND ORDERING

MODEL AND SERIAL NUMBERS

The Greensmaster® 1600 has two identification numbers: a model number and a serial number. These numbers are stamped into a plate located on rear of frame. In any correspondence concerning the unit, supply the model and serial numbers to ensure correct information and replacement parts are obtained.

Note: Do not order by reference number if a parts catalog is being used; use the part number.

To order replacement parts from an authorized TORO Distributor, supply the following information:

1. Model and serial numbers.

2. Part number, description, and quantity of parts desired.

The Toro General Commercial Products Warranty

A Two-Year Limited Warranty

Conditions and Products Covered

The Toro Company and its affiliate, Toro Warranty Company, pursuant to an agreement between them, jointly warrant your 1996 or newer Toro Commercial Product ("Product") purchased after January 1, 1997, to be free from defects in materials or workmanship for two years or 1500 operational hours*, whichever occurs first. Where a warrantable condition exists, we will repair the Product at no cost to you including diagnosis, labor, parts, and transportation. This warranty begins on the date the Product is delivered to the original retail purchaser.

* Product equipped with hour meter

Instructions for Obtaining Warranty Service

You are responsible for notifying the Commercial Products Distributor or Authorized Commercial Products Dealer from whom you purchased the Product as soon as you believe a warrantable condition exists.

If you need help locating a Commercial Products Distributor or Authorized Dealer, or if you have questions regarding your warranty rights or responsibilities, you may contact us at:

Toro Commercial Products Service Department
Toro Warranty Company
8111 Lyndale Avenue South
Bloomington, MN 55420-1196
612-888-8801
800-982-2740
E-mail: commercial.service@toro.com

Owner Responsibilities

As the Product owner, you are responsible for required maintenance and adjustments stated in your operator's manual. Failure to perform required maintenance and adjustments can be grounds for disallowing a warranty claim.

Items and Conditions Not Covered

Not all product failures or malfunctions that occur during the warranty period are defects in materials or workmanship. This express warranty does not cover:

- Product failures which result from the use of non-Toro replacement parts, or from installation and use of add-on, modified, or unapproved accessories.
- Product failures which result from failure to perform required maintenance and/or adjustments.
- Product failures which result from operating the Product in an abusive, negligent or reckless manner.
- Parts subject to consumption through use unless found to be defective. Examples of parts which are consumed, or used up, during normal Product operation include, but are not limited to, blades, reels, bedknives, tines, spark plugs, castor wheels, tires, filters, belts, etc.
- Failures caused by outside influence. Items considered to be outside influence include, but are not limited to, weather, storage practices, contamination, use of unapproved coolants, lubricants, additives, or chemicals, etc.
- Normal "wear and tear" items. Normal "wear and tear" includes, but is not limited to, damage to seats due to wear or abrasion, worn painted surfaces, scratched decals or windows, etc.

Parts

Parts scheduled for replacement as required maintenance are warranted for the period of time up to the scheduled replacement time for that part.

Parts replaced under this warranty become the property of Toro. Toro will make the final decision whether to repair any existing part or assembly or replace it. Toro may use factory remanufactured parts rather than new parts for some warranty repairs.

General Conditions

Repair by an Authorized Toro Distributor or Dealer is your sole remedy under this warranty.

Neither The Toro Company nor Toro Warranty Company is liable for indirect, incidental or consequential damages in connection with the use of the Toro Products covered by this warranty, including any cost or expense of providing substitute equipment or service during reasonable periods of malfunction or non-use pending completion of repairs under this warranty. Except for the Emissions warranty referenced below, if applicable, there is no other express warranty. All implied warranties of merchantability and fitness for use are limited to the duration of this express warranty.

Some states do not allow exclusions of incidental or consequential damages, or limitations on how long an implied warranty lasts, so the above exclusions and limitations may not apply to you.

This warranty gives you specific legal rights, and you may also have other rights which vary from state to state.

Note regarding engine warranty: The Emissions Control System on your Product may be covered by a separate warranty meeting requirements established by the U.S. Environmental Protection Agency (EPA) and/or the California Air Resources Board (CARB). The hour limitations set forth above do not apply to the Emissions Control System Warranty. Refer to the Engine Emission Control Warranty Statement printed in your operator's manual or contained in the engine manufacturer's documentation for details.

Countries Other than the United States or Canada

Customers who have purchased Toro products exported from the United States or Canada should contact their Toro Distributor (Dealer) to obtain guarantee policies for your country, province, or state. If for any reason you are dissatisfied with your Distributor's service or have difficulty obtaining guarantee information, contact the Toro importer. If all other remedies fail, you may contact us at Toro Warranty Company.

Rev. 12/09/1999