1970

TORO

MODEL NOS. 55003-000001 & UP (Recoil)
55051-000001 & UP (Electric)

PARTS CATALOG

8 H.P. LAWN TRACTOR (Recoil & Electric)

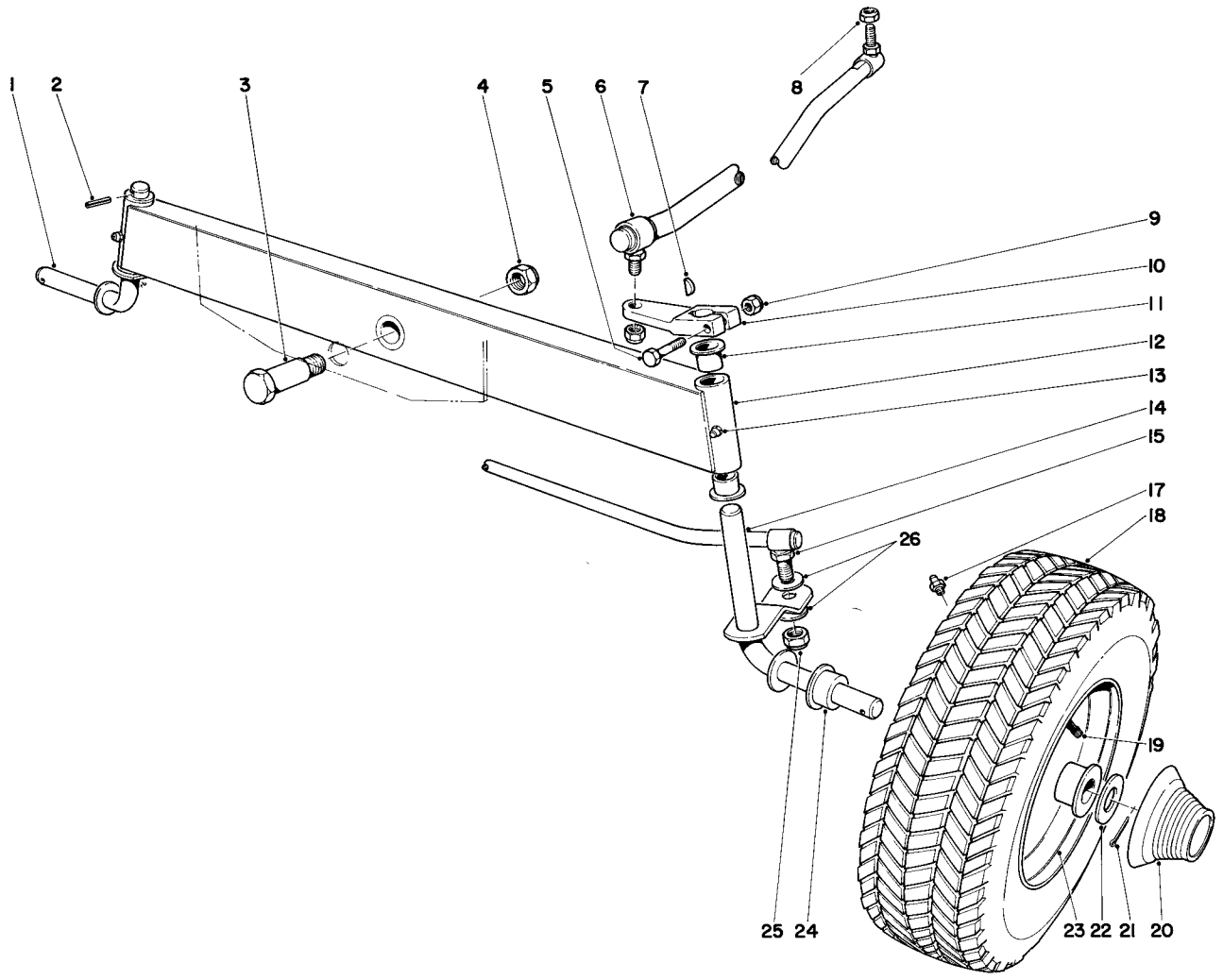

FRONT AXLE ASSEMBLY

Ref. No.	Part No.	Description	No. Used
1	7-4061	Spindle R.H.	1
2	32121-24	Roll Pin	1
3	7-3884	Shoulder Bolt	1
4	32152-3S	Nut	1
5	321-9	Capscrew	1
6	7-6330	Drag Link	1
7	3257-3	Woodruff Key	1
8	32146-6	Lock Nut	2
9	32152-4S	Nut	1
10	7-4067	Arm Drag Link	1
11	256-136	Bushing	4
12	7-4057	Front Axle (Incl. Ref. #11)	1
13	302-49S	Grease Fitting	2

Ref. No.	Part No.	Description	No. Used
14	7-4064	Spindle L.H.	1
15	7-4078	Tie Rod	1
17	302-5	Grease Fitting	2
18	231-49S	Tire	2
19	232-27S	Valve Stem	2
20	7-3932	Hub Cap Front	2
21	3272-22	Cotter Pin	2
22	7-0126	Washer	2
23	241-105S	Rim	2
24	256-175	Bushing	4
25	32146-6	Nut	2
26	3256-41	Washer	4
	7-3360	Front Wheel Assem.	2

Copyright 1969 By
Toro Manufacturing Corporation
Minneapolis, Minnesota 55420 U.S.A.

Price 25 cents

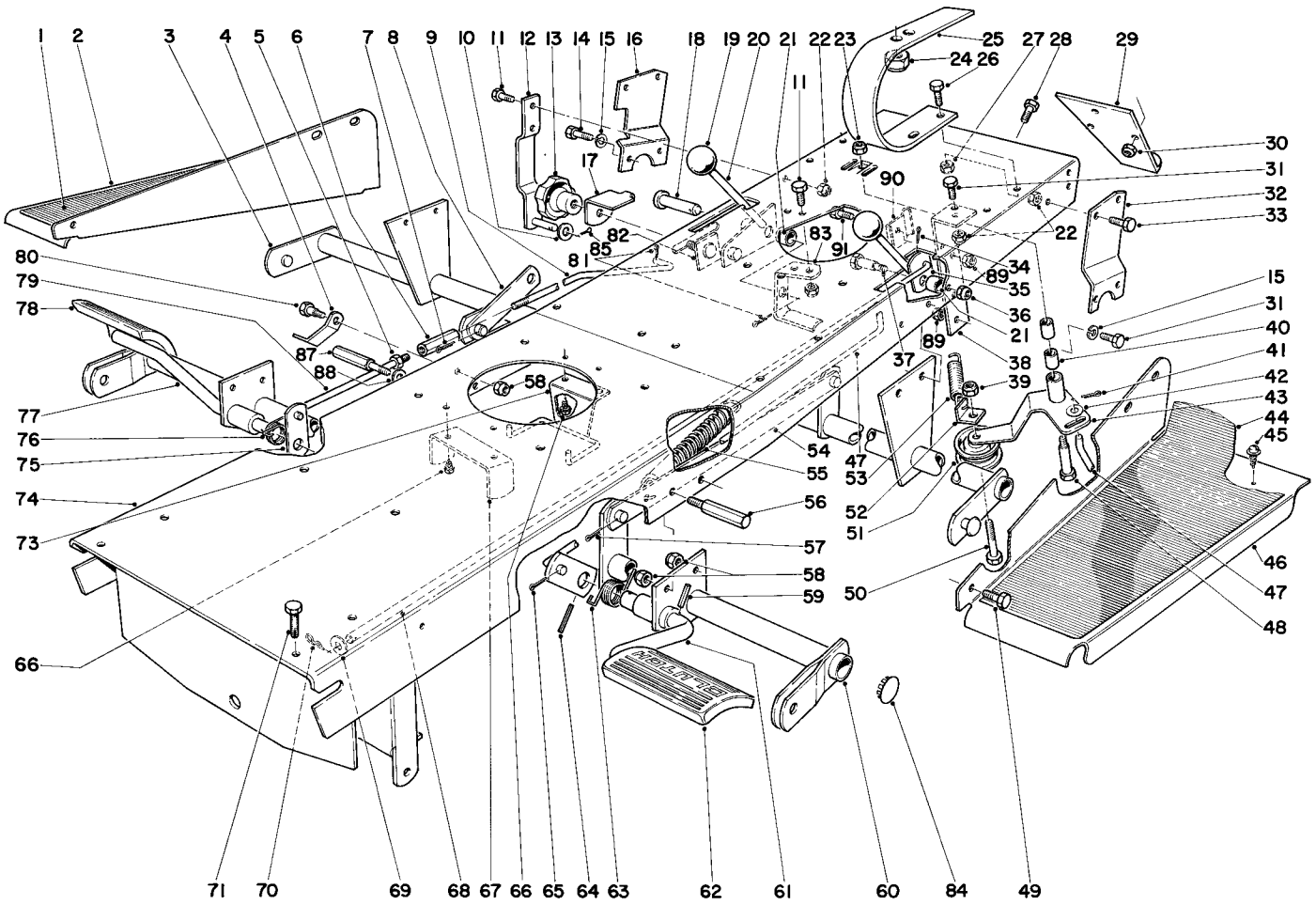

CHASSIS ASSEMBLY

Ref. No.	Part No.	Description	No. Used
1	7-4128	Pad Right	1
2	7-4033	Foot Rest R. H.	1
3	7-5770	Cross Tube Rear	1
4	7-5470	Pedal Latch	1
5	3218-2	Jam Nut	1
6	7-4193	Screw Brake Adjusting	1
7	3272-7	Cotter Pin	4
8	7-4195	Lift Link	1
9	7-5510	Brake Rod Rear	1
10	3256-2	Washer	1
11	322-4	Capscrew	2
12	7-6660	Brake Hanger	1
13	7-3902	Knob Height Adjustment	1
14	322-6	Capscrew	4
15	3253-4	Lockwasher	6
16	7-5280	Support Right	1
17	7-4098	Slide	1
18	283-24S	Pin	1
19	233-24S	Knob	2
20	7-4076	Lever	1
21	7-4070	Spacer	3
22	32152-1S	Nut	13
23	32152-2S	Locknut	1
24	32152-3S	Nut	1

Ref. No.	Part No.	Description	No. Used
25	7-5130	Seat Spring	2
26	323-4	Capscrew	2
27	32152-2S	Locknut	2
28	323-4	Capscrew	3
29	7-4032	Hitch	1
30	32152-2S	Nut	3
31	322-2	Capscrew	3
32	7-5250	Support Left	1
33	322-2	Capscrew	4
34	3272-6	Cotter Pin	1
35	7-4073	Lever	1
36	32152-2S	Locknut	1
37	7-4071	Shoulder Bolt	1
38	7-5290	Support Transaxle	1
39	32152-2S	Nut	1
40	256-172S	Bushing	2
41	3272-6	Cotter Pin	1
42	3256-23	Washer	1
43	7-4043	Idler Arm (Incl. Ref. #40)	1
44	7-4130	Pad Left	1
45	32104-77	Self Tapping Screw	4
46	7-4034	Foot Rest Left	1
47	7-4035	Clutch Rod	1
48	7-0731	Shoulder Bolt	1

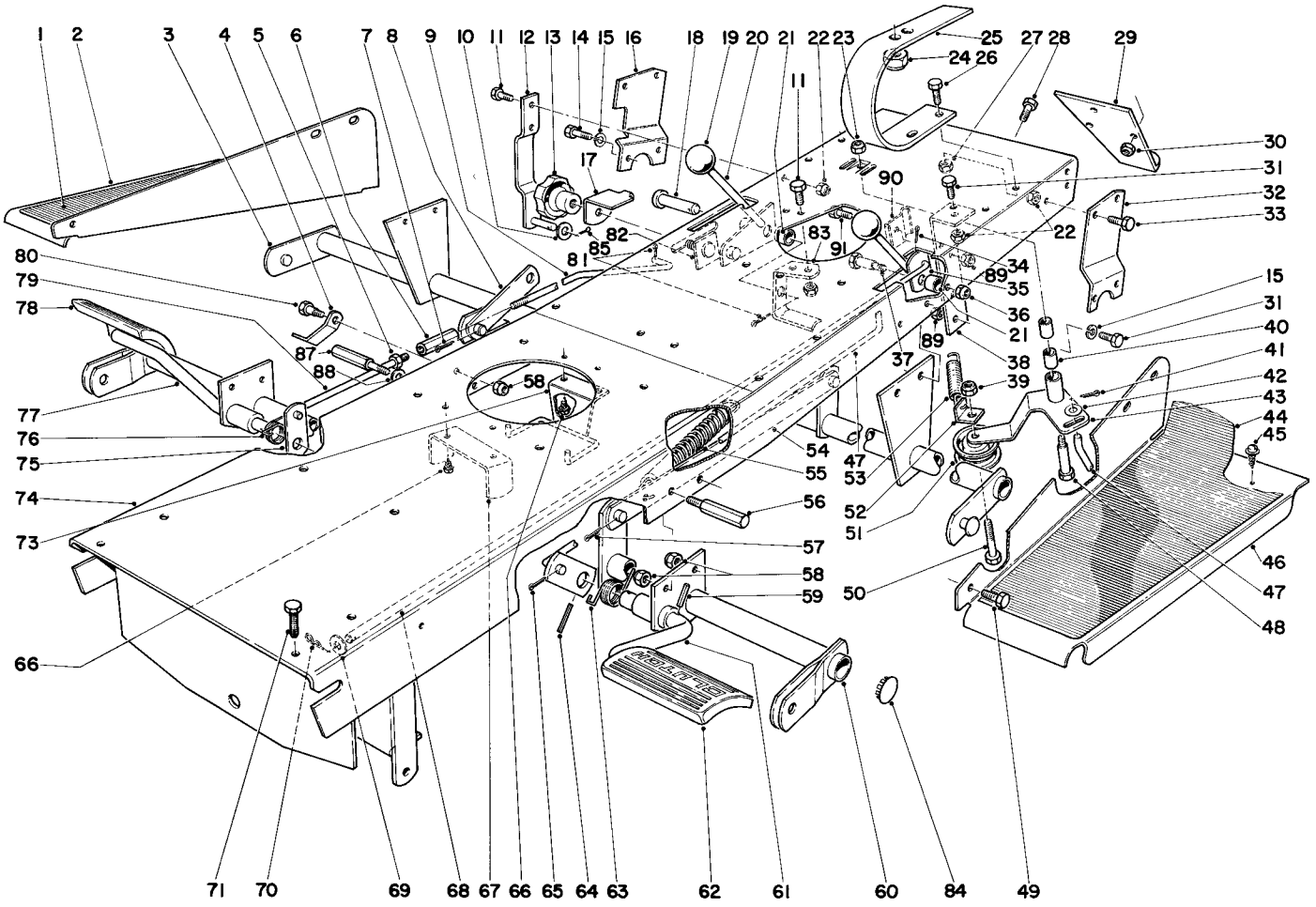

CHASSIS ASSEMBLY

Ref. No.	Part No.	Description	No. Used
49	322-3	Capscrew	6
50	323-9	Capscrew	1
51	7-0448	Idler Pulley	1
52	7-3976	Bracket Spring	1
53	7-4373	Tension Spring	1
54	7-4052	Lift Equalizer	1
55	7-4292	Counterbalance Tension Spring	1
56	7-3668	Pedal Stop	1
57	3272-7	Cotter Pin	2
58	32152-1S	Lock Nut	9
59	32121-45	Roll Pin	2
60	7-4005	Front Cross Tube	1
61	7-4055	Pedal Left	1
62	7-3901	Pad Clutch Pedal	1
63	7-4238	Pedal Return Spring	1
64	32121-51S	Roll Pin	2
65	3272-5	Cotter Pin	2
66	32140-58	Screw Self Tapping	4
67	7-4252	Cutter Guide	1
68	7-4196	Rod P.T.O. Control	1
69	3256-3	Washer	2

Ref. No.	Part No.	Description	No. Used
70	3290-307	Cotter Pin	1
71	32104-28	Self Tapping Screw	2
73	7-4680	Belt Traction Guide	1
74	7-5450	Frame	1
75	7-4191	Lever Pedal Shaft	2
76	7-4240	Pedal Return Spring	1
77	7-5660	Pedal Right	1
78	7-3900	Pad Brake Pedal	1
79	7-5560	Brake Rod Front	1
80	7-0163	Shoulder Bolt	1
81	3272-6	Cotter Pin	1
82	7-3667	Plate Knob	1
83	7-6020	Support Guide	1
84	2410-26	Plug Button	4
85	3272-5	Cotter Pin	1
87	7-4590	Pedal Stop	1
88	7-0532	Washer	1
89	32152-4	Nut	2
90	7-6720	Belt Guide	1
91	321-2	Capscrew	1

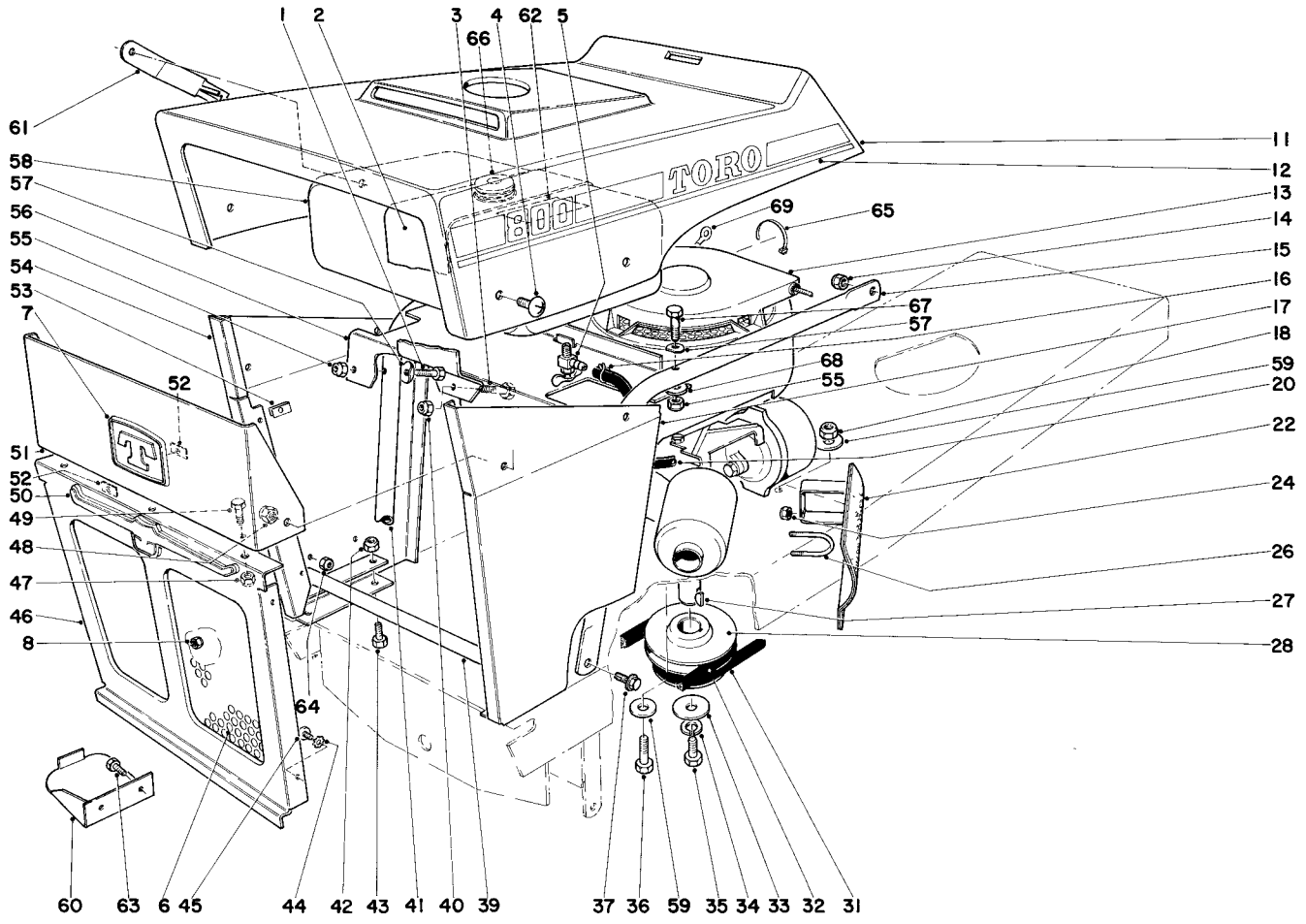

HOOD AND ENGINE ASSEMBLY

Ref. No.	Part No.	Description	No. Used
1	321-8	Capscrew	2
2	7-4900	Strap Gas Tank	1
3	321-8	Capscrew	1
4	3258-158S	Truss Head Screw	4
5	304-88	Hose Connector	1
6	7-5980	Panel Grille	1
7	7-5400	Logo Plate Recoil	1
8	3296-12	Nut	2
11	7-5600	Hood	1
12	7-6250	Decal Hood Left (Recoil)	1
*	7-6260	Decal Hood Right (Recoil)	1
*	7-6360	Decal Hood Right (Electric)	1
*	7-6370	Decal Hood Left (Electric)	1
13	221-346	Engine (Recoil)	1
*	221-347	Engine (Electric)	1
14	32152-4S	Locknut	2
15	7-4146	Support Gas Tank Left	1
16	2412-6	Clamp	2
17	7-5310	Skin Left Front	1
18	32152-1S	Locknut	4
20	7-3983	Gas Hose	1
22	7-5710	Muffler Guard	1
24	32127-11	Nut	2
26	7-6090	U-Bolt	1

Ref. No.	Part No.	Description	No. Used
27	3257-3S	Woodruff Key	1
28	7-5270	Engine Pulley	1
31	7-4232	V-Belt Traction	1
32	7-4231	V-Belt Power Take Off	1
33	3256-4	Washer	1
34	3253-21	Lockwasher	1
35	3211-6	Capscrew	2
36	322-7	Capscrew	4
37	32140-18	Sems Screw	2
39	7-4106	Hinge	1
40	32152-4S	Locknut	1
41	7-4145	Support Gas Tank Right	1
42	32152-4S	Locknut	4
43	321-3	Capscrew	4
44	3255-17	Lockwasher	4
45	3290-111S	Screw	4
46	7-6040	Grille	1
47	32152-4S	Locknut	3
48	32152-1S	Locknut	4
49	321-3	Capscrew	3
50	7-3441	Bullshead Grille	1
51	7-5350	Blank Headlamp (Recoil)	1
*	7-4213	Panel Headlamp (Electric)	1
52	3290-275S	Tinnerman Nut	5

* Not Illustrated

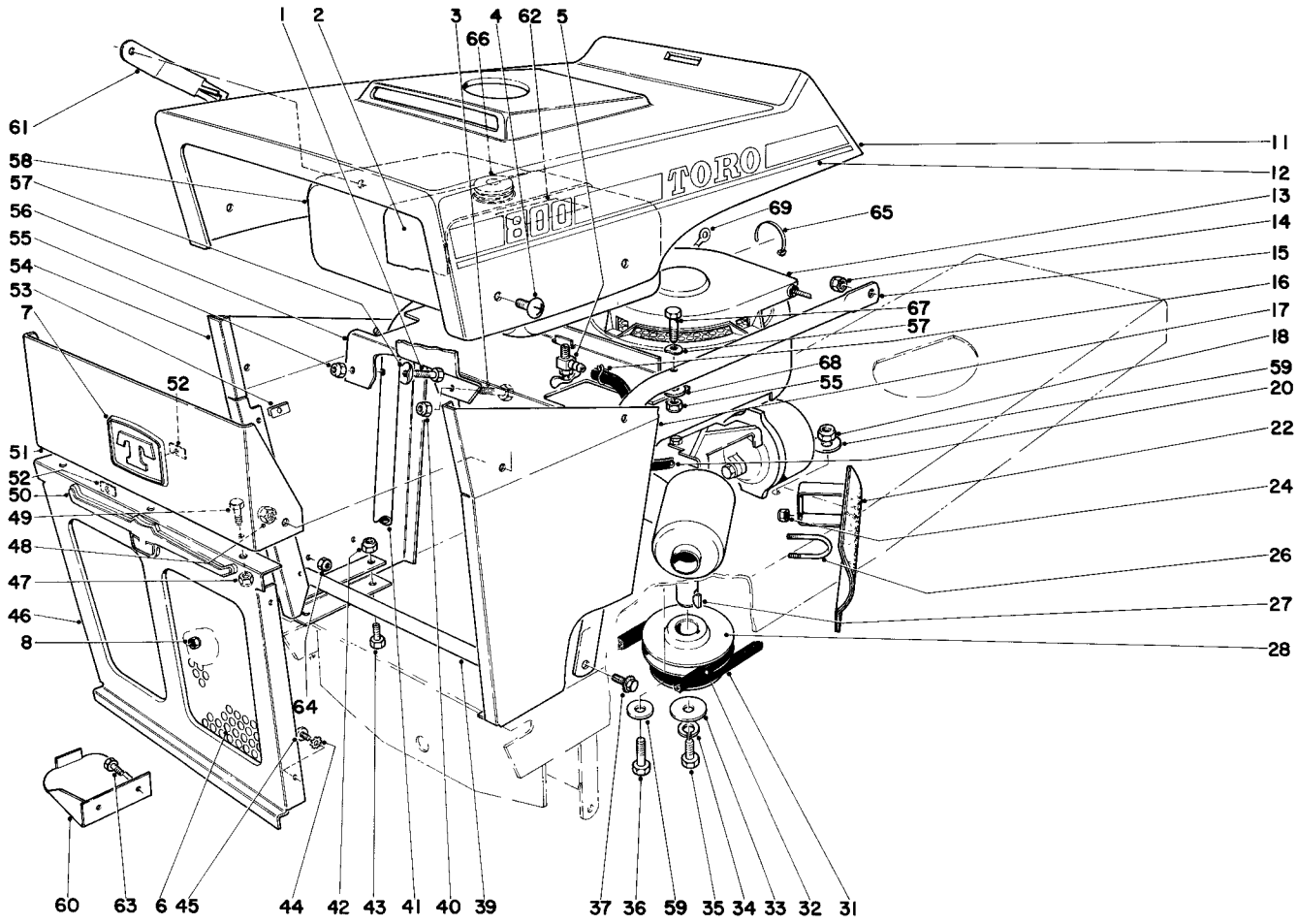

HOOD AND ENGINE ASSEMBLY

Ref. No.	Part No.	Description	No. Used
53	3290-191	Tinnerman Nut	4
54	7-4104	Skin Right Front (Recoil)	1
*	7-4580	Skin Right Front	1
55	32152-4S	Locknut	4
56	7-3904	Bracket Gas Tank	1
57	3-7501	Washer	4
58	7-4920	Gas Tank	1
59	3256-23	Flat Washer	8
60	7-4510	Trimmer Support (Electric)	1
61	7-4500	Bracket Trimmer (Electric)	1

Ref. No.	Part No.	Description	No. Used
62	7-4600	Decal, Gas Tank	1
63	321-2	Capscrew (Electric)	2
64	32152-4	Locknut (Electric)	2
65	218-75	Clip (Right Hand Side Only) (Electric)	2
66	7-5380	Gage - Fuel	1
67	321-9	Capscrew	2
68	7-5460	Spacer	2
69	218-445	Wire	1

* Not Illustrated

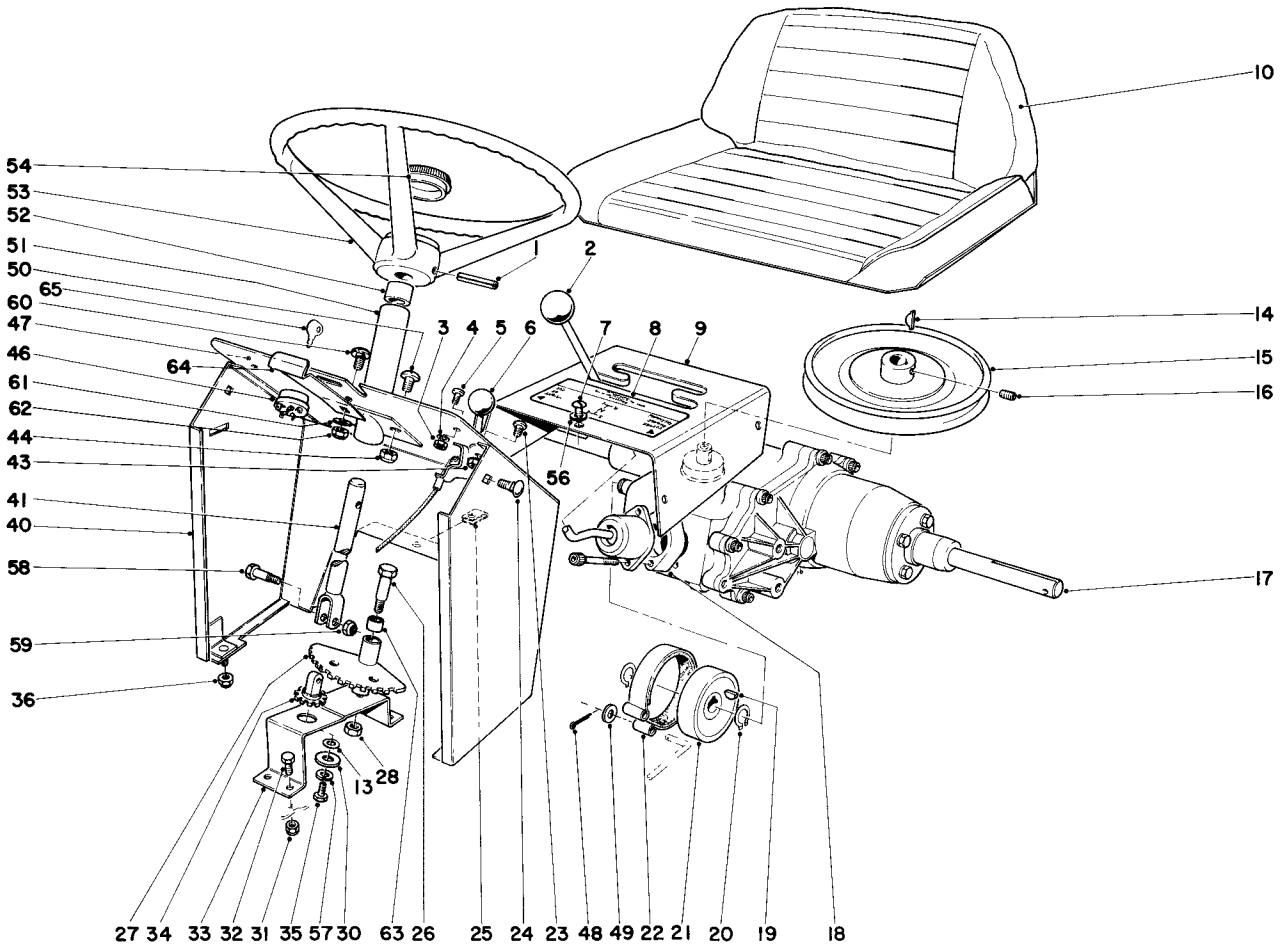

DASH ASSEMBLY

Ref. No.	Part No.	Description	No. Used
1	32121-78S	Roll Pin	1
2	233-21S	Knob	1
3	3217-26	Nut	4
4	3255-17	Lockwasher	4
5	3290-305	Screw	4
6	7-5370	Throttle Control	1
7	3258-2	Screw Round Head	5
8	7-6200	Decal Shift Pattern	1
9	7-4030	Tunnel	1
10	7-6110	Seat Assembly	1
13	7-5990	Spacer	1
14	3257-30	Woodruff Key	1
15	7-4051	Pulley	1
16	3242-13S	Set Screw	2
17	7-4001	Transaxle	1
18	7-4264	Extension Shift Housing	1
19	3257-32	Woodruff Key	1
20	32120-64	Snap Ring	2
21	7-4218	Brake Drum	1
22	7-4220	Brake Band Assembly	1
23	3290-305	Round Head Machine Screw	2
24	3229-1	Carriage Bolt	2
25	3290-192	Tinnerman Clip	5
26	7-5500	Shoulder Bolt	1
27	7-5920	Gear Steering	1
28	32146-6	Nut	1
30	7-6640	Washer	2
31	32152-1S	Locknut	4
32	322-3	Capscrew	4

Ref. No.	Part No.	Description	No. Used
33	7-4148	Bracket Mounting	1
34	7-6000	Pinion Steering	1
35	321-4	Capscrew	1
36	32152-1S	Locknut	2
40	7-5590	Dash Hood Support	1
41	7-5960	Steering Shaft	1
43	3217-26	Keps Nut	2
44	32152-1S	Locknut	2
46	7-5240	Switch Ignition (Electric)	1
47	7-5640	Decal Dash Panel (Recoil)	1
*	7-5630	Decal Dash Panel (Electric)	1
48	3272-6	Cotter Pin	1
49	3256-23	Washer	1
50	3258-158S	Cross Recess Hd. Screw	2
51	7-4002	Steering Tube (Incl. Ref. #52)	1
52	256-167S	Bushing	1
53	238-5S	Steering Wheel	1
54	7-4323	Steering Wheel Cap	1
56	3253-3	Lockwasher	5
57	3253-3	Lockwasher	1
58	7-6010	Screw Shoulder	1
59	32152-5	Nut	1
60	3229-23	Carriage Bolt	1
61	3256-22	Washer	1
62	32152-4	Nut	1
63	256-100	Bushing	2
64	7-5080	Latch Hood	1
65	218-412	Ignition Key (Electric)	1

*Not Illustrated

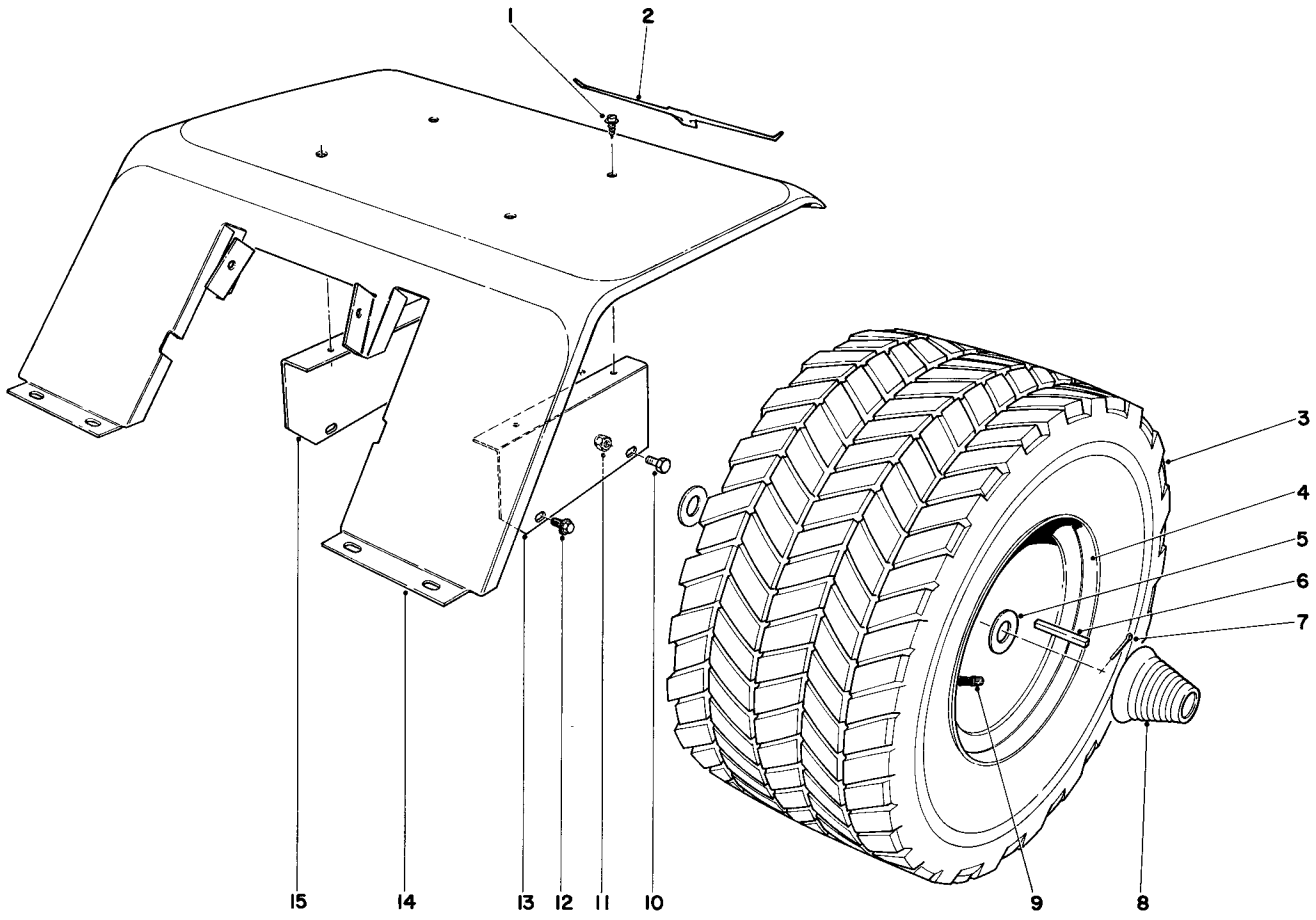

REAR TIRE AND FENDER ASSEMBLY

Ref. No.	Part No.	Description	No. Used
1	32104-77	Self Tapping Screw	4
2	7-3908	Decal Rear Fender	1
3	231-60	Tire	2
4	217-90S	Rim	2
5	7-4115	Washer	4
6	5-1865	Square Key	2
7	3272-22	Cotter Pin	2
8	7-4116	Hub Cap Rear	2

Ref. No.	Part No.	Description	No. Used
9	232-21	Valve Stem	2
10	322-3	Capscrew	2
11	32152-1S	Lock Nut	2
12	32140-18	Self Tapping Screw	2
13	7-4120	Fender Support L. H.	1
14	7-5120	Fender	1
15	7-4118	Fender Support R. H.	1
	7-5330	Rear Wheel Assembly	2

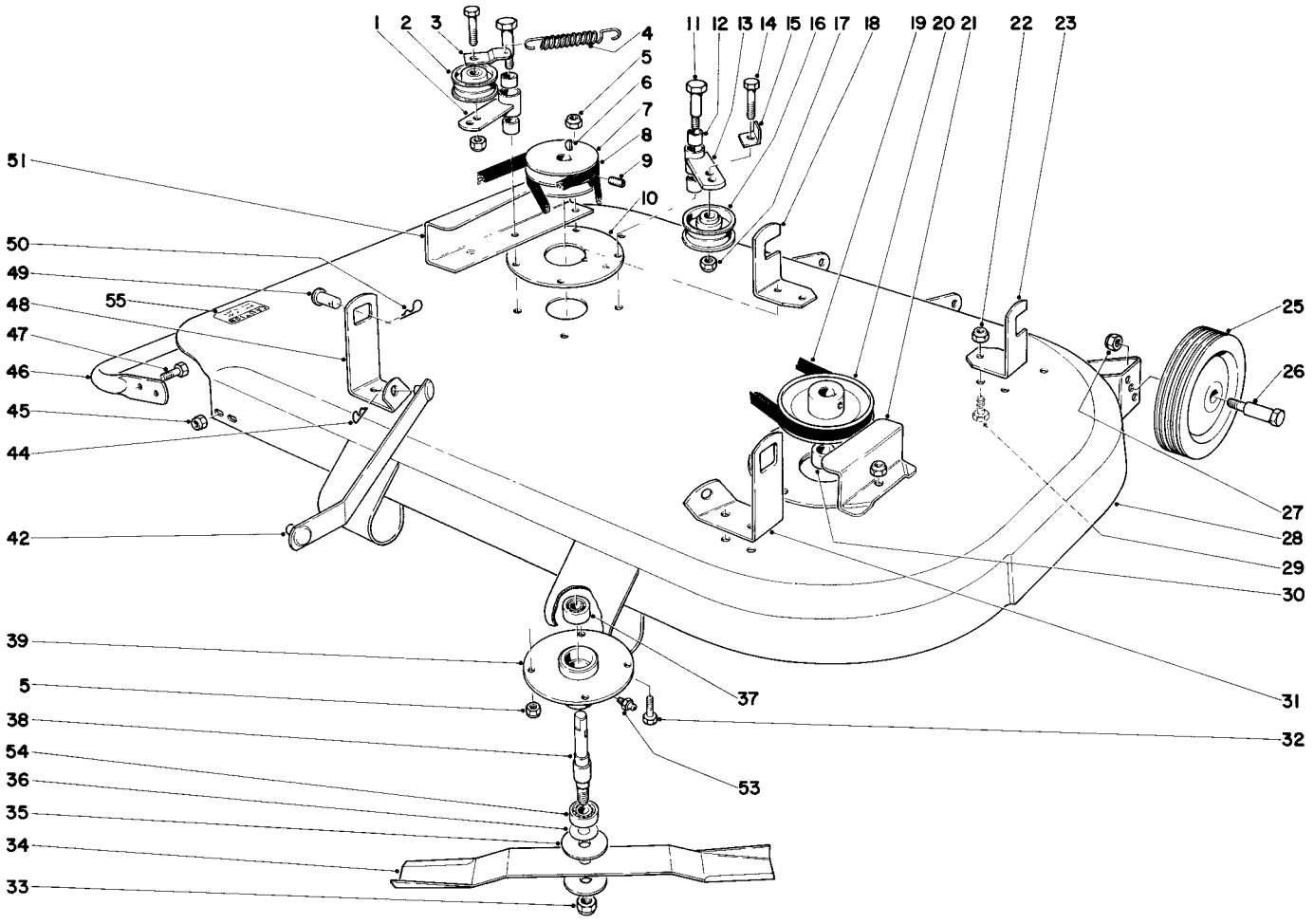

36" MOWER ASSEMBLY

Ref. No.	Part No.	Description	No. Used
1	7-3780	Idler Plate (Incl. Ref. #12)	1
2	7-4660	Pulley Idler	1
3	7-4382	Bracket Spring	1
4	7-3977	Spring Tension	1
5	32152-1S	Nut	8
6	3257-5	Key	2
7	7-3788	Pulley	1
8	7-4230	Belt	1
9	3246-2	Set Screw	2
10	7-0252	Washer	2
11	7-3878	Bolt Shoulder	2
12	256-172S	Bushing	4
13	7-3781	Idler Plate (Incl. Ref. #12)	1
14	323-8	Capscrew	2
15	7-3976	Clip	1
16	7-0136	Pulley Idler	1
17	32152-2S	Nut	2
18	7-4210	Bracket	1
19	7-4228	Belt	1
20	7-3796	Pulley	1
21	7-4212	Belt Guard	1
22	32152-1S	Nut	8
23	7-4208	Bracket Mower L. H.	1
25	241-87S	Wheel	2
26	7-0262	Axle Bolt	2
27	32152-2S	Nut	2

Ref. No.	Part No.	Description	No. Used
28	7-5720	Housing	1
29	322-2	Capscrew	8
30	7-3747	Spacer Blade Spindle	1
31	7-4206	Bracket Mower Front Left	1
32	322-4	Capscrew	6
33	32152-6S	Nut	2
34	7-2464	Blade	2
35	7-0253	Washer	4
36	7-3590	Washer	2
37	251-5	Bearing	2
38	7-4205	Spindle – Blade	2
39	7-4204	Mower Spindle Housing	2
42	7-4111	Tow Bar	2
44	3290-250	Hair Pin Cotter	4
45	32152-4S	Nut	4
46	7-4211	Guard Mower Housing	1
47	3229-10	Carriage Bolt	4
48	7-4207	Bracket Mower Front Right	1
49	7-4110	Clevis Pin	2
50	3290-250	Hair Pin Cotter	2
51	7-4317	Guard Mower Housing	1
53	302-5	Grease Fitting	2
54	251-123	Bearing	2
55	7-6630	Caution Decal	1
	7-5730	Cutting Attachment, Complete	1

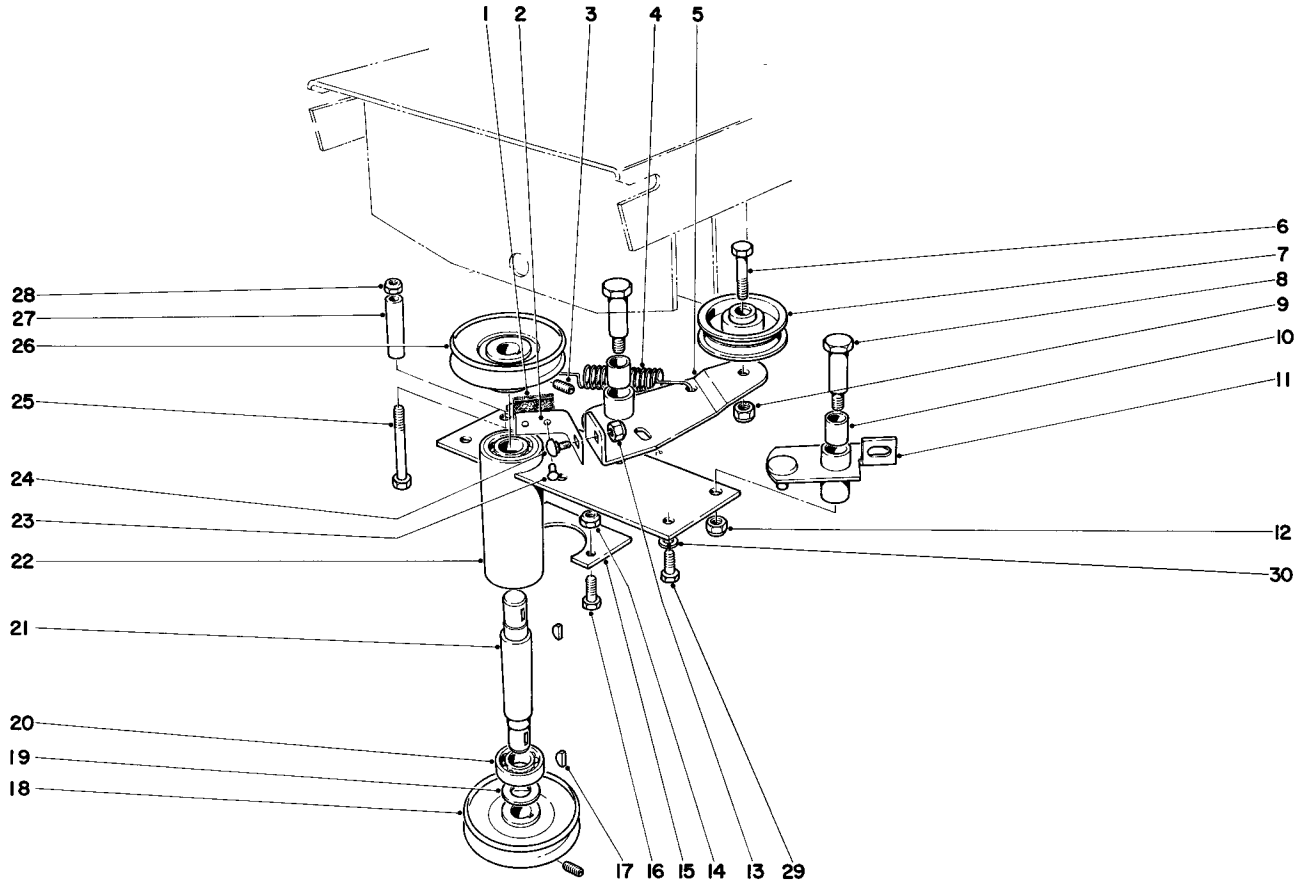

POWER TAKEOFF ASSEMBLY

Ref. No.	Part No.	Description	No. Used
1	7-0643	Brake Lining	1
2	7-4093	Brake Spring	1
3	3246-1	Set Screw	4
4	7-3970	Spring Tension	1
5	7-4190	Idler Place (Incl. Ref. #10)	1
6	323-8	Capscrew	1
7	7-0136	Idler Pulley	1
8	7-0731	Shoulder Bolt	2
9	32152-2S	Locknut	1
10	256-172S	Bushing	4
11	7-4094	Pivot Bracket (Incl. Ref. #10)	1
12	32152-2S	Locknut	2
13	32152-2S	Locknut	1
14	32152-1S	Locknut	2
15	7-5950	Retainer Power Take Off Tube	1
16	322-2	Capscrew	5

Ref. No.	Part No.	Description	No. Used
17	3257-5	Key	2
18	7-4096	Pulley	1
19	7-0777	Washer - Bearing	1
20	251-5	Bearing	2
21	7-4095	Shaft Power Take Off	1
22	7-5580	Power Take Off Tube	1
23	3295-21	Pop Rivet	2
24	3231-21	Carriage Bolt	1
25	322-12	Capscrew	1
26	7-3796	Pulley	1
27	7-4097	Spacer	1
28	32152-1S	Nut	1
29	322-3	Capscrew	3
30	3253-4	Lockwasher	3
	7-4092	Brake Assembly (Incl. Ref. 1, 2 and 23)	1

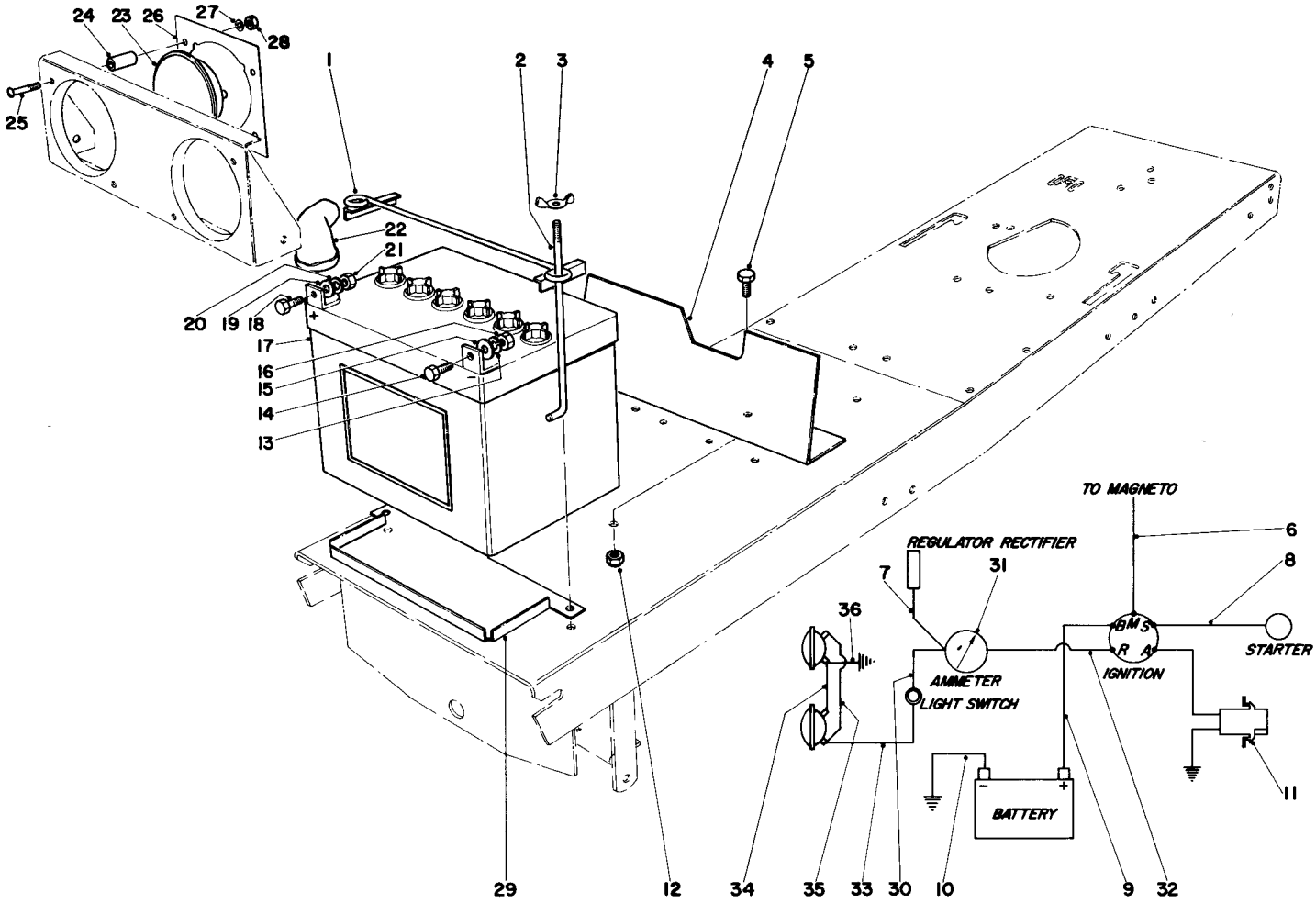

ELECTRICAL ASSEMBLY

Ref. No.	Part No.	Description	No. Used
1	7-0534	Battery Clamp	1
2	7-3328	Bolt Battery	2
3	32103-19	Wing Nut	2
4	7-4328	Shield, Heat	1
5	322-2	Capscrew	2
6	7-6220	Wire Assy. Switch to Magneto	1
8	7-6140	Wire Assy. Switch to Starter	1
9	7-6150	Wire Assy. Switch to Battery	1
10	7-4080	Wire Assy. Battery to Ground	1
11	7-5230	Wire Assy. Tractor Electrical Trimmer	1
12	32152-1S	Locknut	2
13	3253-3	Lockwasher	1
14	321-4	Capscrew	1
15	3256-2	Flat Washer	1
16	3217-5	Nut	1
17	239-13S	Battery 12 Volt	1
18	322-3	Capscrew	1
19	7-0024	Flat Washer	1

Ref. No.	Part No.	Description	No. Used
20	3253-4	Lockwasher	1
21	3217-6	Nut	1
22	218-331S	Terminal Boot	2
23	7-1646	Headlamp	2
24	7-4254	Spacer	4
25	32122-45	Screw	4
26	7-4320	Holder Headlight	2
27	3253-12	Lockwasher	4
28	3217-26	Nut	4
29	7-5390	Retainer Battery	1
30	7-6170	Wire Assy. Light Switch to Ammeter	1
31	7-6130	Ammeter Gage	1
32	7-6180	Wire Assy. Ammeter to Switch	1
33	7-6190	Wire Assy. Lights to Light Switch	1
34	7-3538	Wire Assy. Light to Light	1
35	7-3543	Wire Assy. Light to Light	1
36	7-3541	Wire Assy. Light to Ground	1

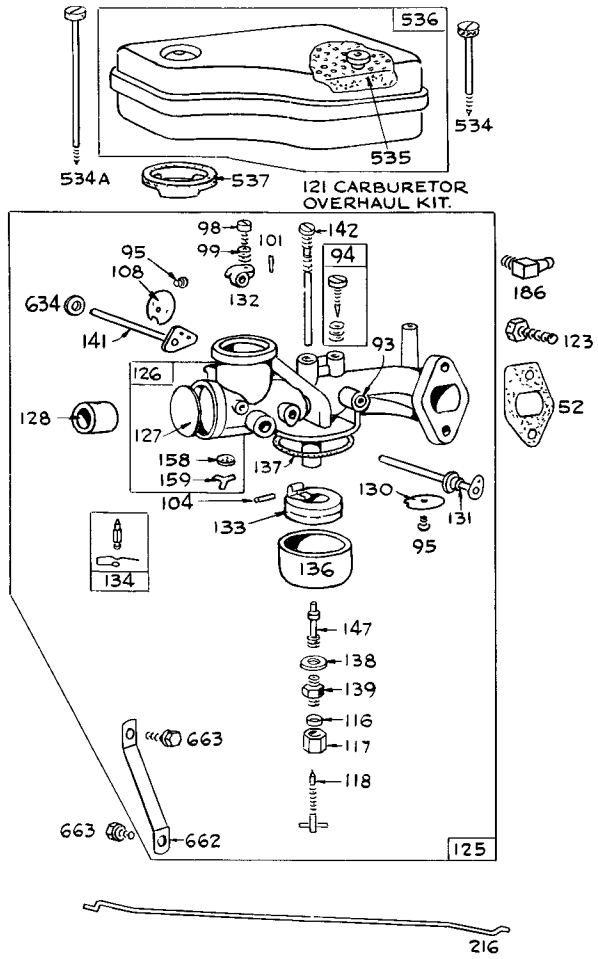

MODEL 390417 CARBURETOR ASSEMBLY (Recoil & Electric)

Ref. No.	Part No.	Description	No. Used
52	♦270538	Gasket–Carburetor Mounting	1
93	23108	Bushing–Throttle Shaft	1
94	‡†292681	Valve Assembly–Carburetor Idle	1
95	93038	Screw–Throttle and Choke Valve Mtg. Sem	1
98	91920	Screw–Machine, Fill. Hd. 8-32 x 5/8"	1
99	26157	Spring–Throttle Adjustment	1
101	93043	Pin–Throttle Stop	1
104	‡†230896	Pin–Float Hinge	1
108	222010	Valve–Choke	1
116	‡†68677	Packing–Needle Valve	1
117	‡†23118	Nut–Needle Valve Packing	1
118	‡299762	Valve–Needle	1
121	299852	Carburetor Overhaul Kit	1
123	93357	Screw–Carburetor Mounting	1
125	390417	Carburetor Assembly	1
126	299851	Body Assy.–Lower Carb.	1
127	221997	Plug–Welch	1
128	211682	Venturi–Carburetor	1
130	221986	Valve–Throttle	1
131	299650	Shaft and Lever–Throttle	1

Ref. No.	Part No.	Description	No. Used
132	211712	Stop–Throttle	1
133	299707	Float–Carburetor	1
134	‡299096	Valve–Fuel Inlet	1
136	221995	Bowl–Float	1
137	‡270511	Gasket–Float Bowl	1
138	‡222014	Washer–Float Bowl	1
139	‡230935	Retainer–Jet Needle	1
141	299746	Shaft and lever–Choke	1
142	‡299740	Nozzle–Carburetor	1
147	‡230932	Screw–Nozzle	1
158	27590	Filter–Carburetor Drain	1
159	220521	Retainer–Carburetor Drain Filter	1
186	67218	Connector–Fuel Pipe	1
216	260979	Link–Choke	1
534	93323	Screw–Air Cleaner	1
534A	93622	Screw–Air Cleaner	1
535	270528	Element–Air Cleaner	1
536	390379	Cleaner Assy.–Air	1
537	270539	Gasket–Air Cleaner	1
634	270382	Washer–Choke Shaft	1
662	222027	Bracket–Carburetor	1
663	93572	Screw–Bracket Mtg.	1

♦ Included in Gasket Set – Part No. 299577
† Included in Carburetor Overhaul Kit – Part No. 295938
‡ Included in Carburetor Overhaul Kit–Part No. 299852

ENGINE MODEL 190702
(Recoil)

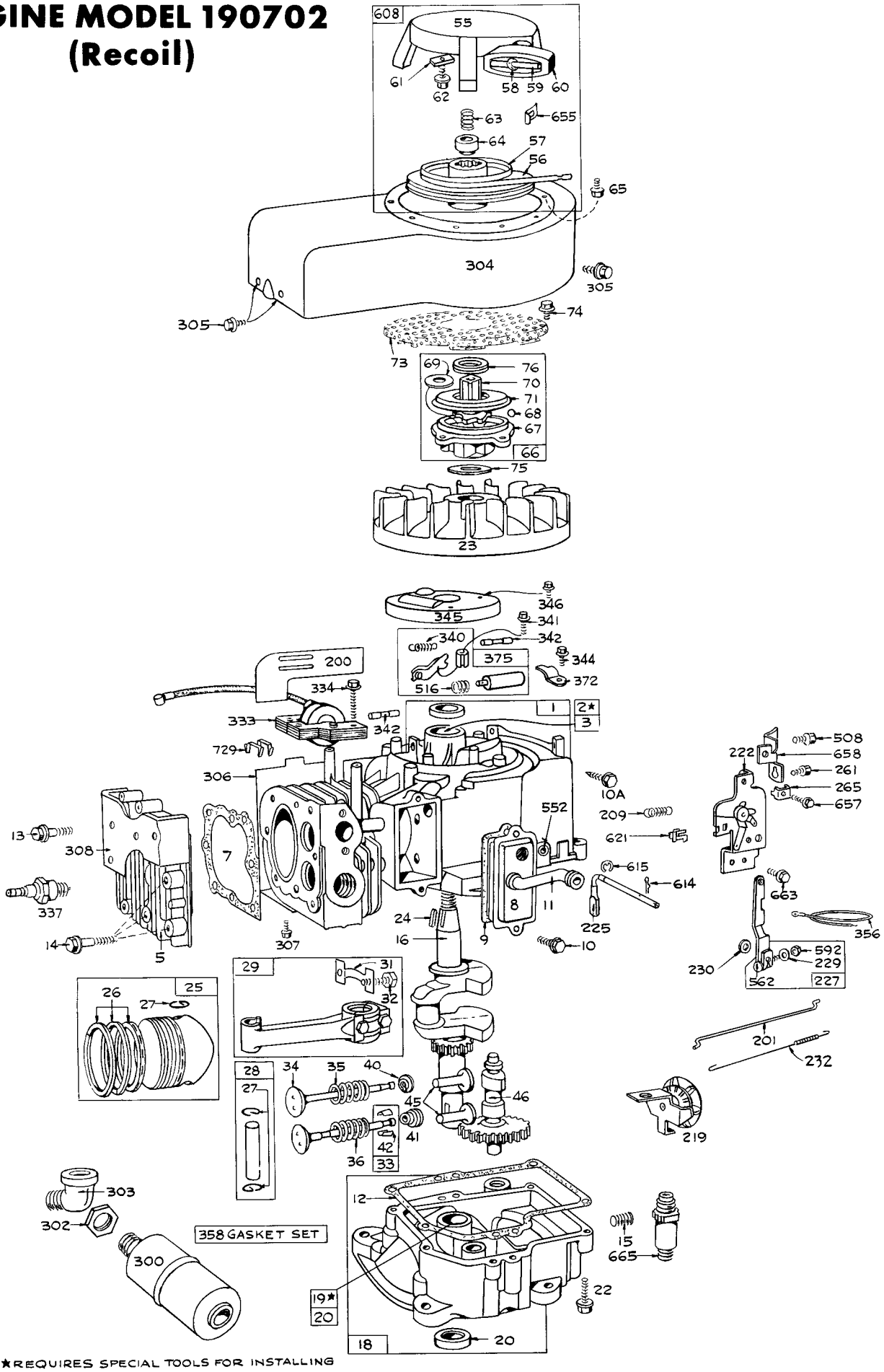

★REQUIRES SPECIAL TOOLS FOR INSTALLING

PARTS LIST FOR MODEL 190702 (Recoil)

Ref. No.	Part No.	Description	No. Used
1	390380	Cylinder Assembly	1
2	295962	Bushing–Cylinder	1
	Note:	Requires special tools for installation	
3	294606	Seal–Oil	1
5	211778	Head–Cylinder	1
7	♦270430	Gasket–Cylinder Head	1
8	299848	Breather Assembly	1
9	♦27803	Gasket Valve Cover	1
10	93394	Screw–Sem	1
10A	93536	Screw	1
11	280005	Tube–Breather	1
12	♦27750	Gasket–Crankcase Cover–1/64" thick	1
	♦27876	Gasket–Crankcase Cover .005" thick	1
	♦27877	Gasket–Crankcase Cover .009" thick	1
13	93210	Screw–Cylinder Head (2-9/32" long)	1
14	93211	Screw–Cylinder Head (2-21/32" long)	1
15	93418	Plug–Oil Drain (Hex. Socket)	1
16	261083	Crankshaft	1
18	298616	Sump–Oil	1
19	295963	Bushing–Oil Sump	1
	Note:	Requires special tools for installation	
20	298423	Seal–Oil	1
22	93205	Screw–Sump Mtg. Sem	1
23	298260	Flywheel–Magneto	1
24	61760	Key–Flywheel	1
25	390347	Piston Assy.–Standard	1
	390348	Piston Assembly–.010" O.S.	1
	390349	Piston Assembly–.020" O.S.	1
	390350	Piston Assembly–.030" O.S.	1
PISTON RING SETS:			
26	299569	Ring Set–Piston–Std.	1
		Consists of:	
		211637 Ring, Piston, Comp., Top Standard	1
		211636 Ring, Piston, Comp., Center, Standard	1
		211635 Ring, Piston, Oil, Std.	1
	299570	Ring Set–Piston–.010" O.S.	1
		Consists of:	
		211649 Ring, Piston, Comp., Top, .010" O.S.	1
		211650 Ring, Piston, Comp., Center, .010" O.S.	1
		211651 Ring Piston, Oil, .010" O.S.	1
	299571	Ring Set–Piston–.020" O.S.	1
		Consists of:	
		211653 Ring, Piston, Comp., Top, .020" O.S.	1
		211654 Ring, Piston, Comp., Center, .020" O.S.	1
		211655 Ring, Piston, Oil, .020" O.S.	1
	299572	Ring Set–Piston–.030" O.S.	1
		Consists of:	
		211657 Ring, Piston, Comp., Top, .030" O.S.	1
		211658 Ring, Piston, Comp., Center, .030" O.S.	1
		211659 Ring, Piston, Oil, .030" O.S.	1
27	68546	Lock–Piston Pin	1
28	295840	Pin Assy.–Piston–Std.	1
	295841	Pin Assembly–Piston–.005" O.S.	1
29	390402	Rod Assy.–Connecting	1
31	222114	Lock–Conn. Rod Screw	1
32	92659	Screw–Conn. Rod	1
33	390419	Valve–Exhaust	1
34	261055	Valve-Intake	1
35	65906	Spring–Intake Valve	1
36	26828	Spring–Exhaust Valve	1
40	221596	Retainer–Intake Valve	1
41	292260	Rotocoil–Exhaust Valve	1
42	93630	Retainer–Exhaust Valve Rotocoil	1
45	260933	Tappet–Valve	1
46	210728	Gear–Cam	1
55	295272	Housing–Rewind Starter	1
56	295871	Pulley–Rewind Starter	1
57	294303	Spring–Rewind Starter	1
58	66564	Rope–Rewind Starter	1
59	230228	Pin–Starter Grip	1
60	66728	Grip–Starter Rope	1
61	68848	Bumper–Starter Pulley	1
62	93254	Screw–Pulley Bumper Mounting Sem	1
63	260414	Spring–Ratchet	1
64	230543	Adapter–Ratchet Spring	1
65	93106	Screw–Rewind Starter Housing Mtg. Sem	1
66	298798	Clutch Assembly–Rewind Starter	1
67	211383	Housing–Rewind Starter Clutch	1
68	63770	Ball–Clutch	1
69	66718	Washer–Starter Clutch, Thrust	1
70	298799	Ratchet–Rewind Starter Clutch	1
71	221653	Washer–Retainer	1
73	221796	Screen–Rewind Starter	1
74	93042	Screw–Rotating Screen Mounting Sem	1
75	220865	Washer–Spring	1
76	68238	Washer–Ratchet Sealing	1
200	221760	Guide–Air	1
201	260971	Link–Governor	1
209	260723	Spring–Governor	1
219	298614	Oil Slinger, Gov. Gear and Bracket Assembly	1
222	298998	Plate–Gov. Control	1
225	230759	Shaft–Gov. Lever	1
227	298303	Lever Assy.–Governor	1
229	220680	Washer–Gov. Lever	1
230	221559	Washer–Gov. Lever	1
232	260584	Spring–Governor Link	1
261	93105	Screw–Sem	1
265	221535	Clamp–Casing	1
300	390249	Muffler–Exhaust	1
302	91242	Locknut–Muffler and Elbow	1
303	91219	Elbow–Muffler 45° Street	1
304	299853	Housing–Blower	1

♦ Included in Gasket Set – Part No. 299577

PARTS LIST FOR MODEL 190702 (Recoil)

Ref. No.	Part No.	Description	No. Used
305	93158	Screw–Blower Housing Mounting Sem	1
306	221898	Shield–Cylinder	1
307	93163	Screw–Cylinder Shield Mounting Sem	1
308	221901	Cover–Cylinder Head	1
333	298968	Armature Assembly	1
334	93381	Screw–Armature Mounting Sem	1
337	298809	Plug–Spark	1
340	26018	Spring–Breaker Arm	1
341	93381	Screw–Breaker Arm Mounting Sem	1
342	65704	Plunger–Breaker Point	1
344	93042	Screw–Condenser Mounting Sem	1
345	222117	Cover–Breaker Point	1
346	93014	Screw–Sem	1
356	299500	Wire–Ground	1
358	299577	Gasket Set	1
372	220477	Clamp–Condenser	1

Ref. No.	Part No.	Description	No. Used
375	294628	Breaker Points & Condenser Set	1
	Note:	299061 Ignition Kit Includes:	
		294628 Point Set	1
		65704 Plunger	1
		61760 Key–Flywheel	1
508	93294	Screw–Sem (Control Plate Strap and Blower Housing Mounting)	1
516	260374	Spring–Connector	1
552	230927	Bushing–Governor Shaft	1
562	92613	Bolt–Governor Lever	1
592	90356	Nut–Hex., 10-24	1
608	295001	Starter Assy.–Rewind	1
614	93306	Cotter–Hair Pin	1
615	93307	Retainer–E-Ring	1
621	297472	Switch–Stop	1
655	221014	Anchor–Spring	1
657	93496	Screw–Sem	1
658	221827	Strap–Speed Control	1
665	296768	Oil Minder	1
729	221907	Clip–Wire	1

SPECIFICATIONS

ENGINE: 8 H.P. 4 cycle, air cooled, polyurethane element air cleaner.

FUEL TANK CAPACITY: One gallon.

TRANSMISSION: 3 speed forward and 1 reverse. Transmission and differential combined enclosed in an aluminum die cast case and using sintered powder metal gears. 3/4 axle shaft with 3/16 keyway. Lubricated with No. 90 gear lubricant. Reductions: 1st – 26.6:1 3rd – 9.1:1
2nd – 13.6:1 Rev. – 19.5:1

TRACTION DRIVE: "A" section V-belt from 2.25 engine pulley to 7.7 PD transmission input pulley (3.42:1 reduction). Total reduction engine to wheels:
1st – 91.1:1 3rd – 31.2:1
2nd – 46.6:1 Rev. – 66.8:1

SPEEDS: @ 3400 engine RPM
1st – 1.7 MPH 3rd – 5.0 MPH
2nd – 3.35 MPH Rev. – 2.35 MPH

TIRES: Front: 13 x 5.00-6 tubeless pneumatic terra-tire.
Rear: 16 x 7.50-8 tubeless pneumatic terra-tire.

WHEELS: Front and rear – stamped steel discs with drop center rims.

CONSTRUCTION: 11 gage HRPO steel formed channel frame with 3/16 steel axle support. ¾" dia. CRS spindles with 11 gage front axles. 18 gage one-piece rear fender.

SEAT: 2¾" padding. Adjustable to two positions. Seat backrest adjustable to three positions.

STEERING: 13" diameter 3 spoke 3" dished steering wheel. 4:1 gear reduction steering sector.

LIGHTS: Headlights standard.

CUTTER DRIVE: Belt drive from jackshaft ahead of engine.

CUTTER HOUSING: Semi-floating 12 gage tempered steel housing attached to chassis by 1/2" diameter steel pins.

CUTTER WIDTH: 36"

BLADE: Two 8 gage 18" fully hardened alloy steel.

BLADE TIP SPEED: 16,500 FPM @ 3400 Engine RPM.

CUTTER SPINDLE: Steel mounted in 2 single row, double sealed ball bearings.

HEIGHT OF CUT: 1½" to 4" by control lever with infinite height variation.

STARTING: E-Z Spin (recoil); 12V with key switch (elec.)

CONTROLS:

ENGINE: Control wire and casing with stop, slow, fast and choke positions mounted on dash (recoil). Slow, fast, & choke (electric).

TRANSMISSION: Single lever with four position in H pattern.

TRACTION CLUTCH: Foot operated pedal. Depressing pedal disengages idler pulley from belt.

BRAKE: Foot operated pedal on right side.

CUTTER: Single lever. In lock-out position blade belt idler is disengaged and blade brake applied. In engaged position brake is released and cutter belt engaged.

GAUGES: Oil Minder oil level gauge, gas gauge (Recoil & Electric) Ammeter (Electric only)

DIMENSIONS:
Wheel base: 42"
Wheel tread: Front: 25" Rear: 23¾"
Width: Without cutter housing: 30"
With cutter housing: 39"
Length: 56½" – Height: 35" – Turning radius: 25½"

WEIGHT: 340 pounds with cutter housing (Recoil)
370 pounds with cutter housing (Electric)

SAFETY FEATURES:
Meets U.S.A.S. specifications
Separate brake and clutch pedals.
Automatic blade brake.
Enclosed and guarded drive.

OPTIONAL EQUIPMENT:

36" Snow blade attachment	Spreader
32" Snowthrower attachment	Sweeper
Dump Cart	Tire Chains
Roller-Aerator	Bagging Kit

ENGINE MODEL 190707
(Electric)

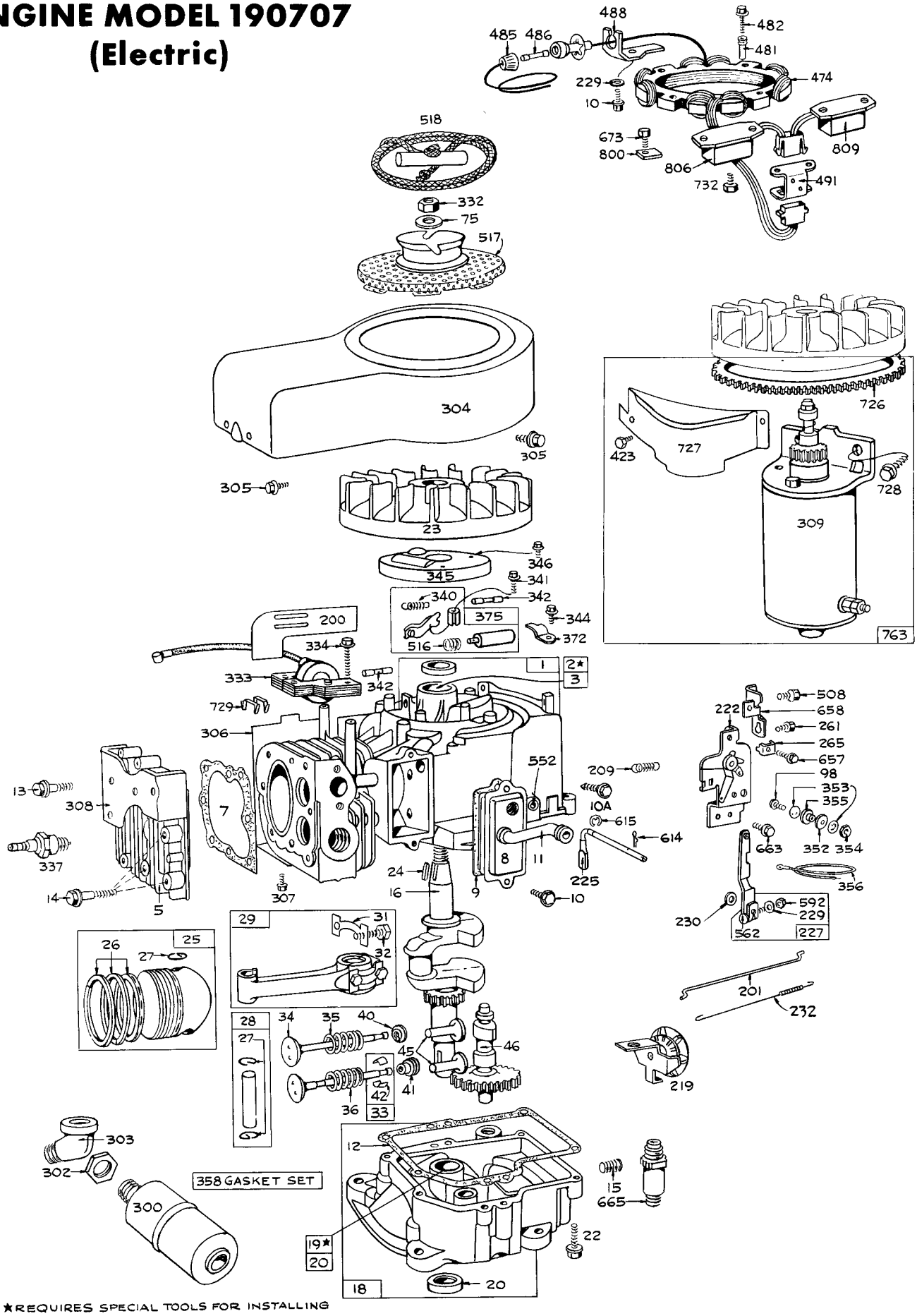

★REQUIRES SPECIAL TOOLS FOR INSTALLING

PARTS LIST FOR MODEL 190707 (Electric)

Ref. No.	Part No.	Description	No. Used
1	390380	Cylinder Assembly	1
2	295962	Bushing–Cylinder	1
	Note:	Requires special tools for installation.	
3	294606	Seal–Oil	1
5	211778	Head–Cylinder	1
7	♦270430	Gasket–Cylinder Head	1
8	299848	Breather Assembly	1
9	♦27803	Gasket–Valve Cover	1
10	93394	Screw–Sem	1
10A	93536	Screw	1
11	280005	Tube–Breather	1
12	♦27750	Gasket–Crankcase Cover–1/64" thick	1
	♦27876	Gasket–Crankcase Cover–.005" thick	1
	♦27877	Gasket–Crankcase Cover–.009" thick	1
13	93210	Screw–Cylinder Head (2-9/32" long)	1
14	93211	Screw–Cylinder Head (2-21/32" long)	1
15	93418	Plug–Oil Drain (Hex. Socket)	1
16	261083	Crankshaft	1
18	298616	Sump–Oil	1
19	295963	Bushing–Oil Sump	
	Note:	Requires special tools for installation	1
20	298423	Seal–Oil	
22	93205	Screw–Sump Mtg. Sem	1
23	390180	Flywheel–Magneto	1
24	61760	Key–Flywheel	1
25	390347	Piston Assy.–Standard	
	390348	Piston Assembly–.010" O.S.	1
	390349	Piston Assembly–.020" O.S.	1
	390350	Piston Assembly–.030" O.S.	1
PISTON RING SETS:			
26	299569	Ring Set–Piston–Std.	1
		Consists of:	
		211637 Ring, Piston, Comp., Top Std.	1
		211636 Ring, Piston, Comp., Center, Std.	1
		211635 Ring, Piston, Oil, Std.	1
	299570	Ring Set–Piston–.010" O.S.	1
		Consists of:	
		211649 Ring, Piston, Comp., Top, .010" O.S.	1
		211650 Ring, Piston, Comp., Center, .010" O.S.	1
		211651 Ring, Piston, Oil, .010" O.S.	1
	299571	Ring Set–Piston– .020" O.S.	1
		Consists of:	
		211653 Ring, Piston, Comp., Top, .020" O.S.	1
		211654 Ring, Piston, Comp., Center, .020" O.S.	1
		211655 Ring, Piston, Oil, .020" O.S.	1

Ref. No.	Part No.	Description	No. Used
	299572	Ring Set–Piston–.030" O.S.	1
		Consists of:	
		211657 Ring, Piston, Comp., Top, .030" O.S.	1
		211658 Ring, Piston, Comp., Center, .030" O.S.	1
		211659 Ring, Piston, Oil, .030" O.S.	1
27	68546	Lock–Piston Pin	1
28	295840	Pin Assy.–Piston–Std.	1
	295841	Pin Assembly–Piston–.005" O.S.	1
29	390402	Rod Assy.–Connecting	1
31	222114	Lock–Conn. Rod Screw	1
32	92659	Screw–Conn. Rod	1
33	390419	Valve–Exhaust	1
34	261055	Valve–Intake	1
35	65906	Spring–Intake Valve	1
36	26828	Spring–Exhaust Valve	1
40	221596	Retainer–Intake Valve	1
41	292260	Rotocoil–Exhaust Valve	1
42	93630	Retainer–Exhaust Valve Rotocoil	1
45	260933	Tappet–Valve	1
46	210728	Gear–Cam	1
75	220865	Washer–Spring	1
200	221760	Guide–Air	1
201	260971	Link–Governor	1
209	260723	Spring–Governor	1
219	298614	Oil Slinger, Gov. Gear and Bracket Assembly	1
222	298998	Plate–Gov. Control	1
		Used on type Nos. 0145, 0146, 0147, 0148, 0149, 0150, 0151, 0152, 0156, 0158, 0159, 0160, 0161, 0162, 0163, 0164, 0165, 0166.	
225	230759	Shaft–Gov. Lever	1
227	298303	Lever Assy.–Governor	1
229	220680	Washer–Gov. Lever	1
230	221559	Washer–Gov. Lever	1
232	260584	Spring–Governor Link	1
261	93105	Screw–Sem	1
265	221535	Clamp-Casing	1
300	390249	Muffler–Exhaust	1
302	91242	Locknut–Muffler and Elbow	1
303	91219	Elbow–Muffler 45° Street	1
304	299392	Housing–Blower	1
305	93158	Screw–Blower Housing Mounting Sem	1
306	221898	Shield–Cylinder	1
307	93163	Screw–Cylinder Shield Mounting Sem	1
308	221901	Cover–Cylinder Head	1
309	390307	Motor–Starting	
		Used on type Nos. 0114, 0115, 0121, 0122, 0129, 0130, 0132, 0136, 0137, 0139, 0140, 0142, 0144, 0145, 0146, 0148, 150, 0151, 0154, 0155, 0158, 0159, 0162, 0164, 0166, 0168	1

♦ Included in Gasket Set – Part No. 299577

PARTS LIST FOR MODEL 190707 (Electric)

Ref. No.	Part No.	Description	No. Used
(*)		American Bosch-Arma	
		No. SMH 12-A11	
		(on Commutator End Cap)	
(**)		Made in Japan for B & S	
		No. MMO. 5ML	
		(on Main Housing)	
		Replacement Parts for	
		Starting Motor No. 390307	
		(see list below)	
		Drive Assembly	
		(Complete)	
		B & S No. 390443 (*)	
		B & S No. 299963 (**)	
		Drive End Cap Assembly	
		w/Bearing and Bracket	
		B & S No. 390944 (*)	
		B & S No. 390454 (**)	
		Armature Assembly	
		including Washers.	
		B & S No. 390446 (*)	
		B & S No. 390456 (**)	
		Housing Assembly	
		including Field Coils.	
		B & S No. 390447 (*)	
		B & S No. 390452 (**)	
		Commutator End Cap	
		Assy. including Bushing,	
		Brushes and Springs.	
		B & S No. 390448 (*)	
		B & S No. 390455 (**)	
		Thru Bolt Assembly	
		includes Nuts and	
		Lockwashers.	
		B & S No. 390450 (*)	
		B & S No. 299962 (**)	
		Brush Kit	
		B & S No. 390449 (*)	
332	92284	Nut	1
333	298968	Armature Assembly	1
334	93381	Screw–Armature Mounting Sem	1
337	298809	Plug–Spark	1
340	26018	Spring–Breaker Arm	1
341	93381	Screw–Breaker Arm Mounting Sem	1
342	65704	Plunger–Breaker Point	1
344	93042	Screw–Condenser Mounting Sem	1
345	222117	Cover–Breaker Point	1
346	93014	Screw–Sem	1
352	66068	Washer–Insulating	1
353	92791	Washer–Lock–Shakeproof	1
354	90576	Nut–Hex.–8-32	1
355	66554	Collar–Insulating	1
356	299500	Wire–Ground	1
358	299577	Gasket Set	1
372	220477	Clamp–Condenser	1
375	294628	Breaker Points and Condenser Set	1
		Note: 299061 Ignition Kit Includes: 294628 Point Set, 65704 Plunger, 61760 Key–Flywheel	
423	93410	Screw–Sem	1
474	390185	Stator–Alternator	1
481	230976	Bushing–Stator	1
482	93621	Screw–Stator Mtg.	1
485	390313	Knob Assy.–Fuse	1
486	67345	Fuse–15 Amp.	1
488	222142	Bracket–Fuse	1
491	222115	Bracket–Rectifier	1
508	93294	Screw–Sem (Control Plate Strap and Blower Housing Mounting)	1
516	260374	Spring–Connector	1
517	295423	Pulley–Rope Starter (with screen)	1
518	69932	Rope–Starter	1
552	230927	Bushing–Governor Shaft	1
562	92613	Bolt–Governor Lever	1
592	90356	Nut–Hex., 10-24	1
614	93306	Cotter–Hair Pin	1
615	93307	Retainer–E-Ring	1
657	93496	Screw–Sem	1
658	221827	Strap–Speed Control	1
665	296768	Oil Minder	1
673	93438	Screw	1
726	299543	Gear, Ring (Includes mounting parts)	1
727	390233	Cover and Shield–Starter	1
728	93535	Screw–Sem	1
729	221907	Clip–Wire	1
732	93490	Screw–Sem	1
763	390211	Electric Starter Kit–12 Volt (Bendix)	1
800	222095	Retainer	1
806	390545	Regulator–Alternator	1
809	390546	Rectifier–Alternator	1

PRODUCT CHANGES

In an effort to make improvements available to Toro owners as quickly as possible, minor changes are incorporated into Toro's products from time to time that do not become immediately shown in the Parts Catalog. If such a change apparently has been made in your unit, which is not reflected in your manual, see your Toro distributor or his authorized Toro service dealer for information and part numbers.

TRANSAXLE MODEL NO. 615 ASSEMBLY

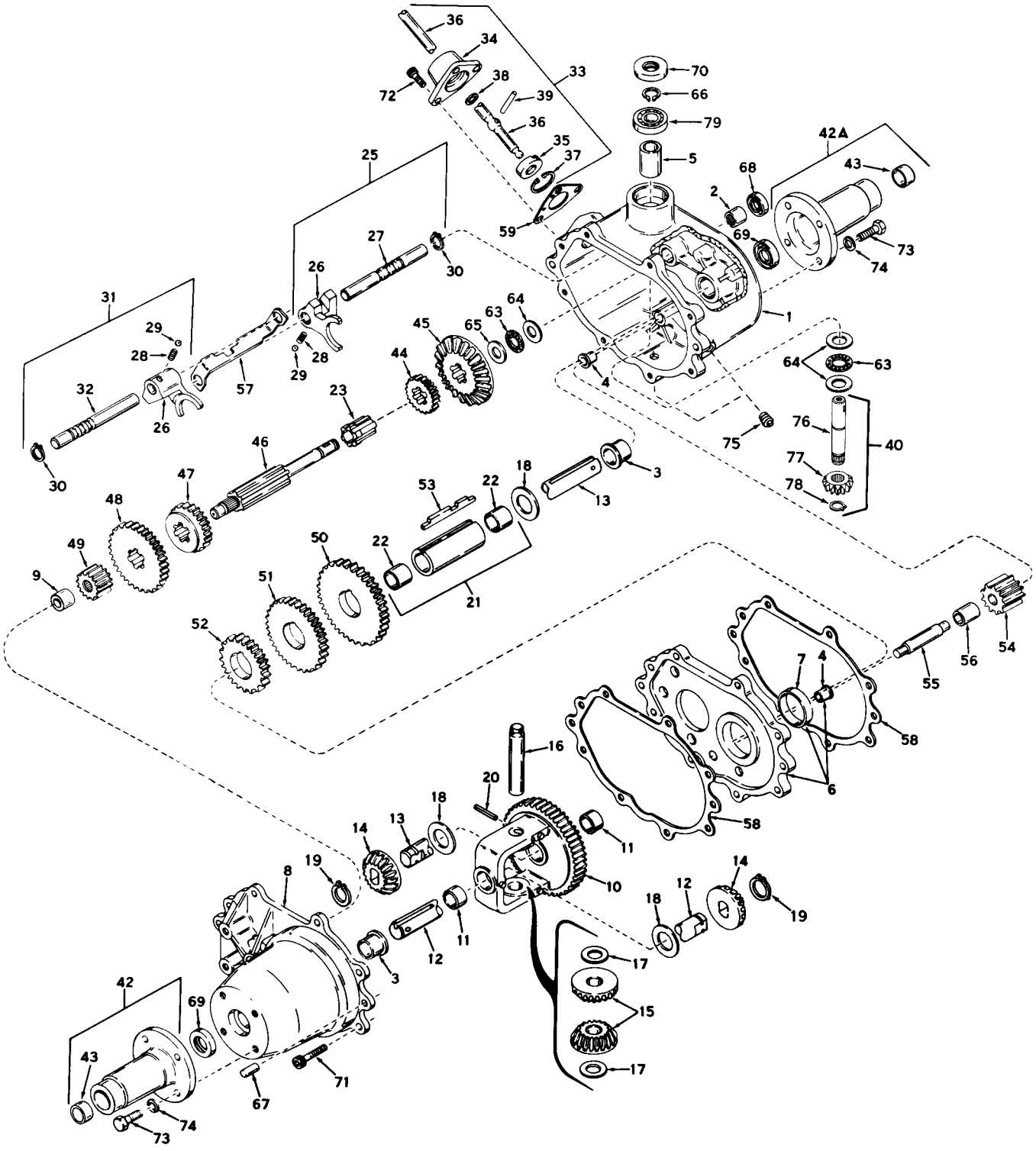

TRANSAXLE MODEL NO. 615 PARTS LIST

Ref. No.	Part No.	Description	No. Used
1	770051	Case Assy., Transaxle (Incl. Nos. 2 thru 5)	1
2	780086	Bearing, Needle	1
3	780059	Bearing, Bronze	1
4	780060	Bearing, Bronze	1
5	780061	Bearing, Bronze	
6	786033	Plate Assy., Center (Incl. Nos. 4 & 7)	1
7	780062	Bearing, Bronze	1
8	772042	Cover Assy., Transaxle (Incl. Nos. 3 & 9)	1
9	780063	Bearing, Needle	1
10	778053	Gear Assy., Differential (Incl. No. 11)	1
11	780064	Bearing, Bronze	1
12	774151	Axle, Left Hand	1
13	774152	Axle, Right Hand	1
14	778067	Gear, Bevel	1
15	778068	Pinion, Bevel	1
16	786034	Pin, Drive	1
17	780065	Washer, Thrust	1
18	780001	Washer, Thrust	1
19	788038	Ring, Snap	1
20	792040	Pin, Roll	1
21	786035	Sleeve Assy., Countershaft (Incl. No. 22)	1
22	780066	Bearing, Bronze	1
23	776090	Shaft, Idler	1
25	784079	Rod Assy., Shift (1st & Rev.) (Incl. Nos. 26 thru 30)	1
26	784004	Fork, Shift	1
27	784083	Rod, Shift	1
28	792003	Spring	1
29	792004	Ball, Steel	1
30	792017	Ring, Snap	1
31	784084	Rod Assy., Shift (2nd & 3rd) (Incl. Nos. 26, 28, 29, 30 & 32)	1
32	784085	Rod, Shift	1
33	784161	Lever & Housing Assy., Shift (Incl. Nos. 34 thru 39)	1
34	784088	Housing, Shift Lever	1
35	784094	Keeper, Shift Lever	1
36	784162	Lever, Shift	1

Ref. No.	Part No.	Description	No. Used
37	792016	Ring, Snap	1
38	792001	Ring, Quad	1
39	792002	Pin, Roll	1
40	776102	Shaft & Gear Assy., Input (Incl. Nos. 76, 77 & 78)	1
42	782036	Housing Assy., Axle (Incl. No. 43)	1
42A	782038	Housing Assy., Axle (Incl. No. 43)	1
43	780091	Bearing, Needle	1
44	778024	Gear (16 teeth)	1
45	778057	Gear, Bevel (33 teeth)	1
46	776089	Shaft, Shifter & Brake	1
47	778058	Gear, Shifting (2nd & 3rd)	1
48	778059	Gear, Shifting (1st & Rev.)	1
49	778060	Gear, Spur (12 teeth)	1
50	778061	Gear, Countershaft Drive (39 teeth)	1
51	778062	Gear, Countershaft (34 teeth)	1
52	778063	Gear, Countershaft (25 teeth)	1
53	792034A	Key, Countershaft	1
54	778064	Idler, Reverse	1
55	776057	Shaft, Reverse Idler	1
56	786036	Spacer, Reverse Idler	1
57	784087	Stop, Shifter	1
58	788033	Gasket, Case & Cover	1
59	788003	Gasket, Shift Lever Housing	1
63	780071	Bearing, Thrust	1
64	780072	Washer, Thrust	1
65	780073	Washer, Thrust	1
66	792035	Ring, Snap	1
67	786026	Pin, Dowel	1
68	788043	Seal, Oil	1
69	788009	Seal, Oil	1
70	788035	Seal, Oil	1
71	792036	Screw, Socket Hd. Cap	1
72	792051	Screw, Socket Hd. Cap	1
73	792037	Screw, Hex Hd.	1
74	792029	Lockwasher	1
75	792039	Plug, Pipe	1
76	776103	Shaft, Input	1
77	778077	Pinion, Input	1
78	788040	Ring, Retaining	1
79	780093	Bearing, Ball	1

MAINTENANCE AND ADJUSTMENT INSTRUCTIONS

CLEAN AIR CLEANER and re-oil element every 25 hours under normal conditions.

1. Remove t o screws and lift off complete air cleaner assembly.
2. Remove ' reen and spacers from foam element.
3. Remov. . .am element from air cleaner body.
4. A Wash foam element in kerosene or liquid detergent and water to remove dirt.
   B – Wrap foam in cloth and squeeze dry.
   C – Saturate foam in engine oil. Squeeze to remove.
   D – Assemble parts - fasten to carburetor with screw.

When assembling make certain the lip of the foam element extends over edge of the air cleaner body. The foam element lip will form a protective seal.

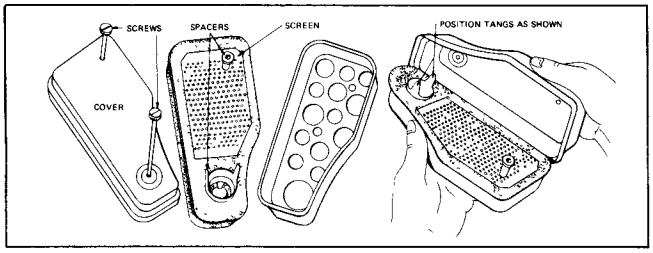

CLEAN COOLING SYSTEM – Grass, chaff or dirt may clog the air cooling system, especially after prolonged service cutting dry grasses. To avoid overheating and engine damage, remove the blower housing and clean the area. This should be a regular maintenance operation.

CLEAN FUEL SYSTEM – Drain and clean fuel tank.

CLEAN SPARK PLUG – Clean and reset gap at .030" every 100 hours of operation.

CAUTION: Blast cleaning of spark plugs in machines that use abrasive grit is not recommended. Spark plugs should be cleaned by scraping or wire brushing and washing with a commercial solvent or gasoline.

CARBURETOR ADJUSTMENTS

Minor carburetor adjustment may be required to compensate for differences in fuel, temperature, altitude and load.

To adjust carburetor turn needle valve clockwise until it just closes. Caution: valve may be damaged by turning it in too far.

Now open needle valve 1-1/8 turns counterclockwise. Close idle valve in same manner and open 1-1/8 turns. This initial adjustment will permit the engine to be started and warmed up prior to final adjustment.

Final Adjustment – Turn needle valve in until engine misses (lean mixture). Then turn it out past smooth operating point until engine runs unevenly (rich mixture). Now turn needle valve to the mid-point between rich and lean so the engine runs smoothly. Hold throttle at idle position and set idle speed adjusting screw until fast idle is obtained (1750 RPM). Hold throttle in idle position and turn idle valve in (lean) and out (rich) until engine idles smoothly. Then reset idle speed adjusting screw so that engine idles at 1750 RPM. Release throttle – engine should accelerate without hesitation or sputtering. If engine does not accelerate properly, the carburetor should be re-adjusted to a slightly richer mixture.

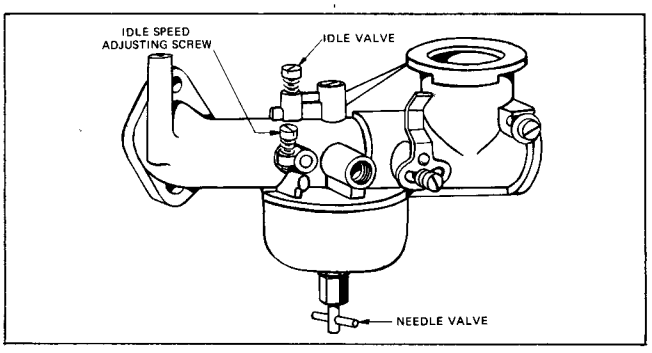

CHOKE-A-MATIC CARBURETOR CONTROLS ADJUSTMENT

Proper choke and stop switch operation is dependent upon proper adjustment of remote controls on the powered equipment.

To Check Operation of Choke-A-Matic Controls:

a. Move remote control lever to "Choke" position. The carburetor choke should be closed.
b. Move remote control to "Stop" position. Governor control lever should make full contact with stop switch.

To Adjust: Place remote control lever on equipment in FAST (high speed) position. Loosen control casing clamp screw "B". Move control casing "A" and wire until lever "D" touches choke operating link at "C". Tighten casing clamp screw "B".

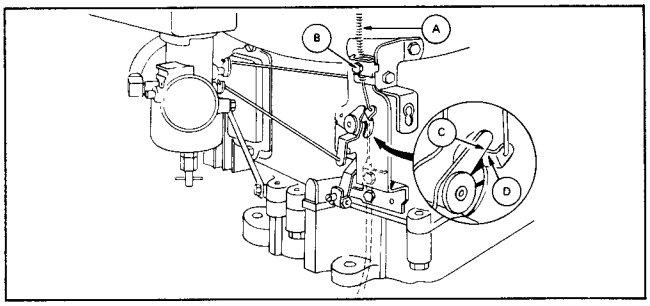

STORAGE INSTRUCTIONS

Engines to be stored over 30 days should be completely drained of fuel to prevent gum deposits forming on essential carburetor parts, fuel filter, fuel lines and tank.

a. Drain fuel tank completely.
b. Operate engine until gasoline in carburetor is completely consumed.
c. While engine is still warm, drain oil from crankcase. Refill with fresh oil.
d. Remove spark plug, pour 1 ounce (2 or 3 tablespoons) of SAE-30 oil into cylinder and crank slowly to distribute oil. Replace spark plug.
e. Clean dirt and chaff from cylinder head fins and blower housing.

TIRE PRESSURE

For shipping purposes, the tires have been over-inflated. The recommended tire pressure is 12-14 lbs.

IMPORTANT

Turn ignition key to "OFF" position before charging battery or removing fuse.