Form No. 3437-339 Rev A

Homologation Kit

Groundsmaster® 4500-D, 4700-D or Reelmaster® 7000-D Traction Unit

Model No. 30667

Installation Instructions

Installation

Loose Parts

Use the chart below to verify that all parts have been shipped.

Procedure	Description	Qty.	Use
1	No parts required	–	Disconnect the battery.
2	No parts required	–	Drill the mounting holes.
3	Right headlight bracket	1	Install the headlights.
	Left headlight bracket	1	
	Bolt (3/8 x 2-1/2 inches)	6	
	Flange nut (3/8 inch)	6	
	Washer (3/8 x 7/8 inches)	8	
	Rubber hanger	2	
	Spacer	4	
	Bolt (5/16 x 1-5/8 inches)	4	
	Flange nut (5/16 inch)	4	
	Right headlight assembly	1	
	Left headlight assembly	1	
	Bent-plate bracket	2	
4	Horn	1	Install the horn.
	Horn bracket	1	
	Bolt (3/8 x 5/8 inch)	1	
	Flange nut (3/8 inch)	1	
	Bolt (1/4 x 2 inches)	2	
	Nut (1/4 inch)	2	
5	Relay switch	1	Install the relay switch and decal.
	Serrated hex-head flange bolt (#8 x 1/2 inch)	1	
	Locknut (#8)	1	
6	Column bracket	1	Install the flasher module and switches on the column bracket.
	Flasher module	1	
	On-Off-On rocker switch	1	
	Beacon switch	1	
	Paddle switch	1	
	Horn switch	1	
	Horn button	1	
	Horn decal (Part No. 104-6957)	1	
	Hex socket button-head screw	1	
	Speed nut	2	

© 2019—The Toro® Company
8111 Lyndale Avenue South
Bloomington, MN 55420

Register at www.Toro.com.

CE

Original Instructions (EN)
Printed in the USA
All Rights Reserved

3437-339 A

Procedure	Description	Qty.	Use
7	Steering-column bracket Column mount bracket Carriage bolt (3/8 x 3/4 inch) Flange nut (3/8 inch) Foam strip Cable tie	1 1 2 2 1 1	Install the column-bracket assembly onto the steering-column.
8	Carriage bolt (#10 x 5/8 inch) Locknut (#10) Sensor plate Flange nut (1/4 inch) Brake-sensor bracket Bolts (1/4 x 3/4 inch) Slotted screw (#6 x 1 inch) Washer (#6) Brake sensor Locknut (#6)	1 1 1 2 1 2 2 4 1 2	Install the brake sensor bracket.
9	Left light bracket Right light bracket Screw (5/8 x 3 inches) Flat washer Jam nut (5/8 inch) Rear-lamp assembly	1 1 4 4 2 2	Install the rear lamps.
10	Plate light Plate bracket Screw (#10 x 5/8 inch) Locknut (#10) Self-tapping screw (5/16 x 1/2 inch)	1 1 2 2 2	Install the license-plate bracket.
11	Wire harness Switch-panel-enclosure cover Screw (#10 x 1/2 inch) Mounting pad Cable tie Jumper wire harness (LED headlights only)	1 1 3 3 11 2	Install the wire harness.
12	Fuse (10 A) Fuse (15 A) Fuse-box decal	3 1 1	Install the fuses into the fuse box.
13	Plate Decal Hex-head screw (1/4 x 2-1/2 inches) Locknut (1/4 inch)	2 4 4 4	Install the decal-mounting plates.

1

Disconnecting the Battery

No Parts Required

Procedure

1. Park the machine on a level suface.
2. Engage the parking brake.
3. Lower the cutting units.
4. Shut off the engine and remove the key.
5. Disconnect the battery; refer to your machine *Operator's Manual*.

2

Drilling the Mounting Holes

No Parts Required

Drilling the Holes for the Headlights and the Wire Harness

1. Remove the nuts from the 2 carriage bolts securing the headlights to the traction-unit frame (Figure 1).
2. Remove the 2 self-tapping bolts securing the top of the platform shroud to the frame (Figure 1).
3. Unplug the headlight connectors and remove the platform shroud from the frame (Figure 1).

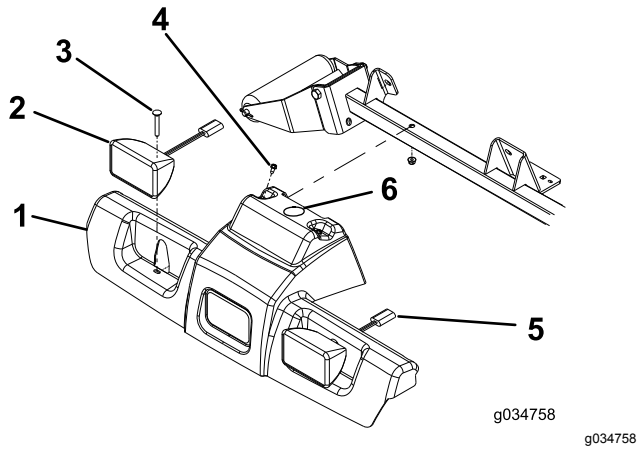

g034758

Figure 1

1. Platform shroud
2. Headlight assembly (halogen shown)
3. Carriage bolt (2)
4. Self-tapping bolt (2)
5. Headlight connector
6. Drill a 38 mm (1-1/2 inch) hole here.

4. Drill a 38 mm (1-1/2 inch) hole in the platform shroud in the location shown in Figure 1.
5. Using the dimensions in Figure 2, locate and drill 6 holes (1.0 cm) through both walls of the roller-support tube.

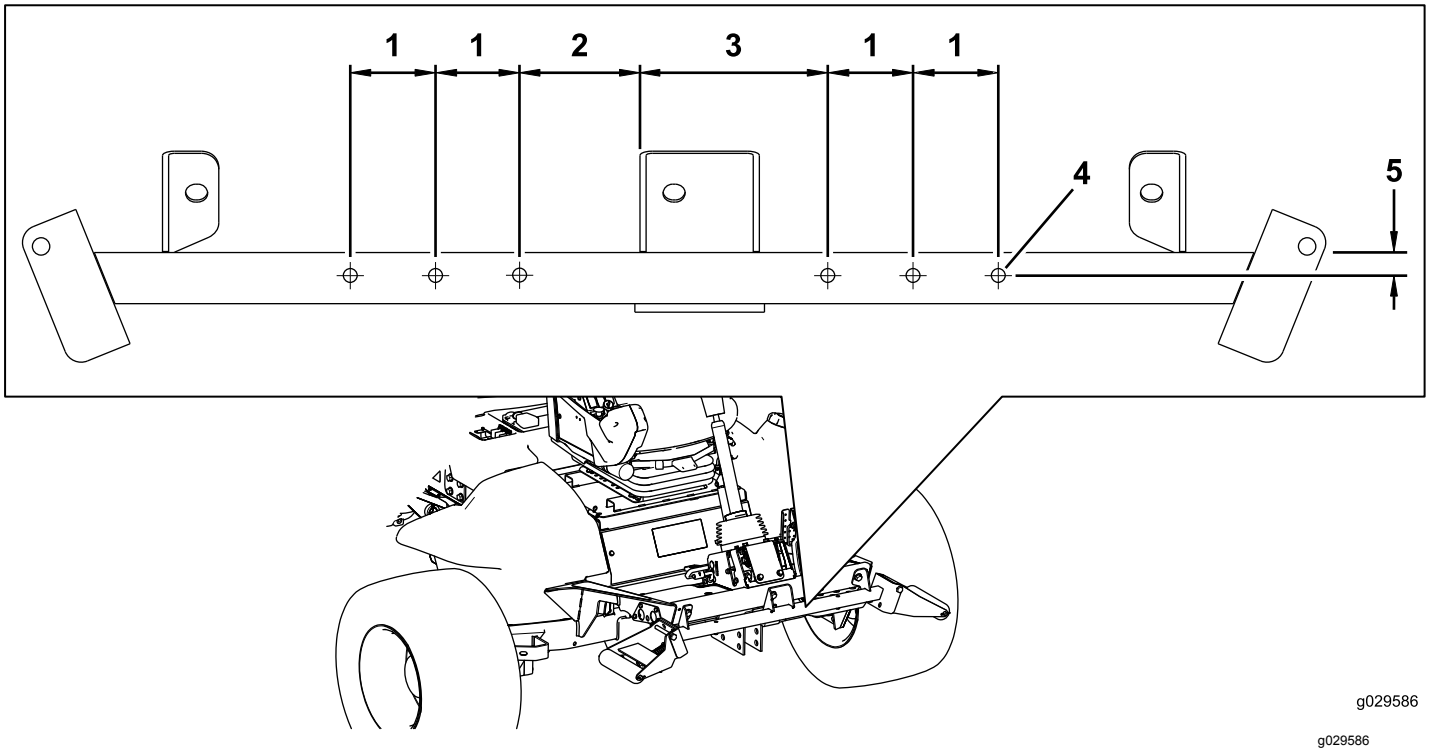

g029586

Figure 2

1. 6.4 cm (2-1/2 inches)
2. 8.9 cm (3-1/2 inches)
3. 14.0 cm (5-1/2 inches)
4. 1.0 cm (13/32 inch) diameter
5. 1.9 cm (3/4 inch)

Drilling the Holes for the Horn Bracket

Using the dimensions in Figure 3, locate and drill 2 holes (7 mm) through both walls of the roller-support tube.

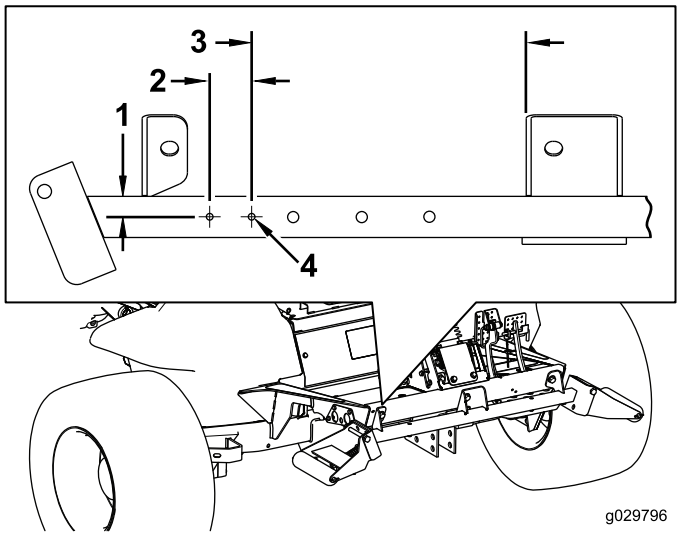

Figure 3

1. 1.9 cm (3/4 inch)
2. 3.8 cm (1-1/2 inches)
3. 25.4 cm (10 inches)
4. 7 mm (9/32 inch) diameter

Drilling the Holes in the Front Footrest for the Brake-Pedal Switch

Using the dimensions in Figure 4, locate and drill 2 holes (7 mm) through the front footrest.

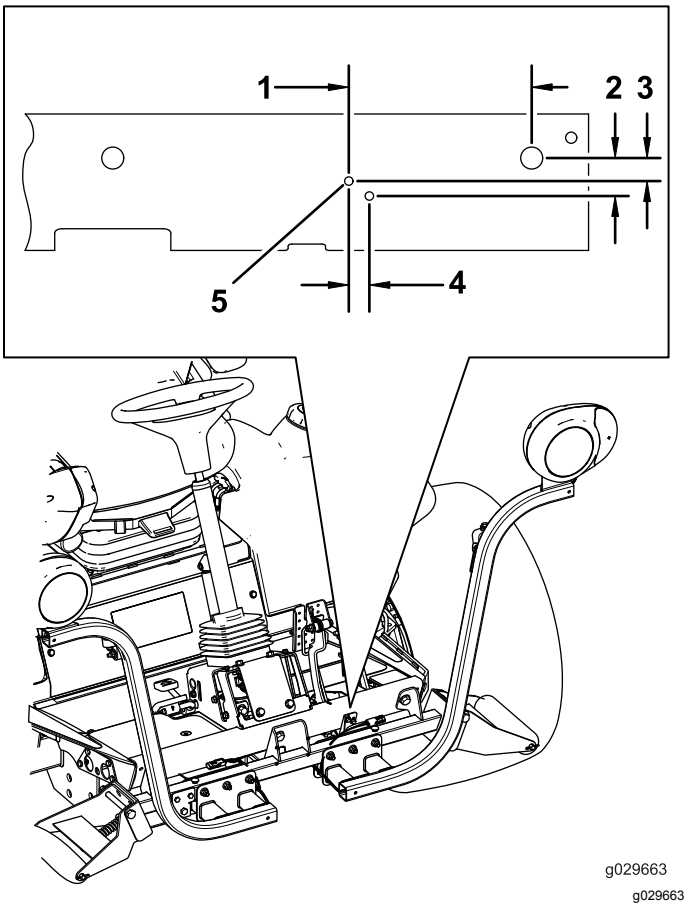

Figure 4

1. 15.5 cm (6-7/64 inches)
2. 32 mm (1-1/4 inches)
3. 19 mm (3/4 inch)
4. 17 mm (11/16 inch)
5. 7 mm (9/32 inch) diameter

Drilling the Mounting Holes in the Rear Bumper for the License Plate

Using the dimensions shown in Figure 5, locate and drill 2 holes (9/32 inch) through the outside wall of the rear bumper.

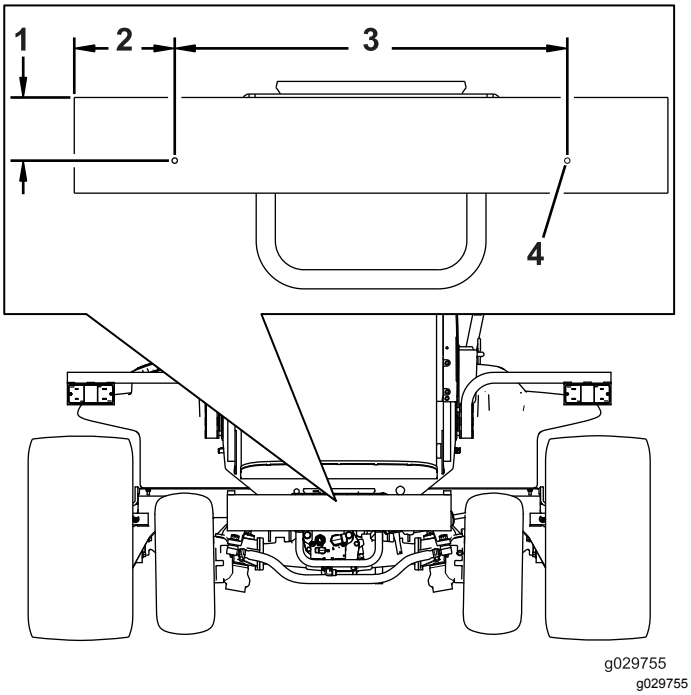

Figure 5

1. 8.3 cm (3-1/3 inches)
2. 13.3 cm (5-1/4 inches)
3. 52.07 cm (20-1/2 inches)
4. Drill a hole (9/32 inch) here.

3

Installing the Headlights

Parts needed for this procedure:

1	Right headlight bracket
1	Left headlight bracket
6	Bolt (3/8 x 2-1/2 inches)
6	Flange nut (3/8 inch)
8	Washer (3/8 x 7/8 inches)
2	Rubber hanger
4	Spacer
4	Bolt (5/16 x 1-5/8 inches)
4	Flange nut (5/16 inch)
1	Right headlight assembly
1	Left headlight assembly
2	Bent-plate bracket

Installing the Headlight Bracket to a ROPS Model

1. Fasten the left and right headlight brackets to the front of the roller-support tube with 6 bolts (3/8 x 2-1/2 inches) and 6 flange nuts (3/8 inch) as shown in Figure 6.

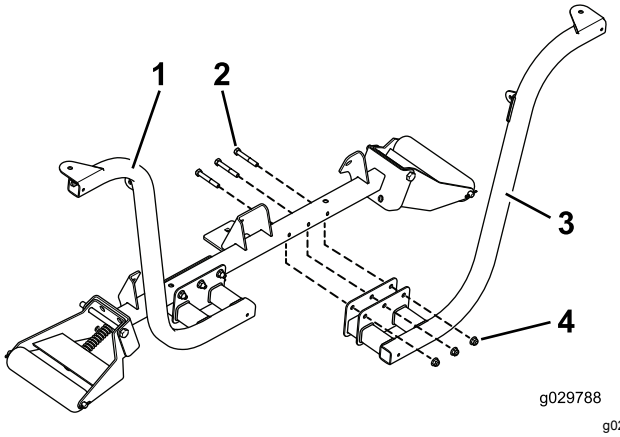

Figure 6

1. Installed headlight bracket
2. Bolts (3/8 x 2-1/2 inches)
3. Headlight bracket
4. Flange nuts (3/8 inch)

Note: Position the bolts so that the flange nuts are toward the front of the traction unit.

2. Fasten the left and right headlights to the headlight brackets (Figure 7) with the fasteners supplied with the lights.

Note: Ensure that the turn-signal lens on the headlight is positioned toward the outside of the traction unit.

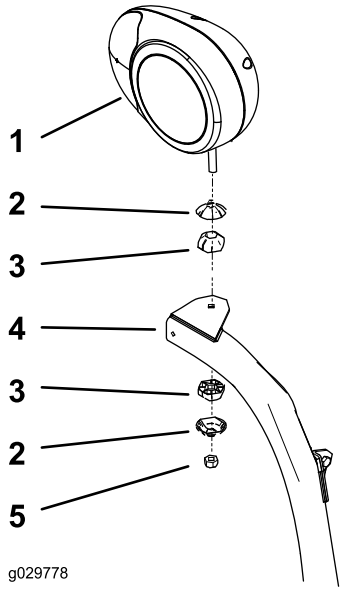

g029778

Figure 7

Right headlight assembly shown

1. Right headlight bracket
2. Articulated-joint shell
3. Articulated joint
4. Headlight arm
5. Locknut (10 mm)

3. Tighten the locknut to firmly hold the headlight assembly to the headlight bracket.

   Note: Do not overtighten the locknut.

Installing the Headlight Bracket to a Cab Model

1. Install a bent-plate bracket onto each of the upper corners of the lower front panel of the cab with the existing screws as shown in Figure 8.

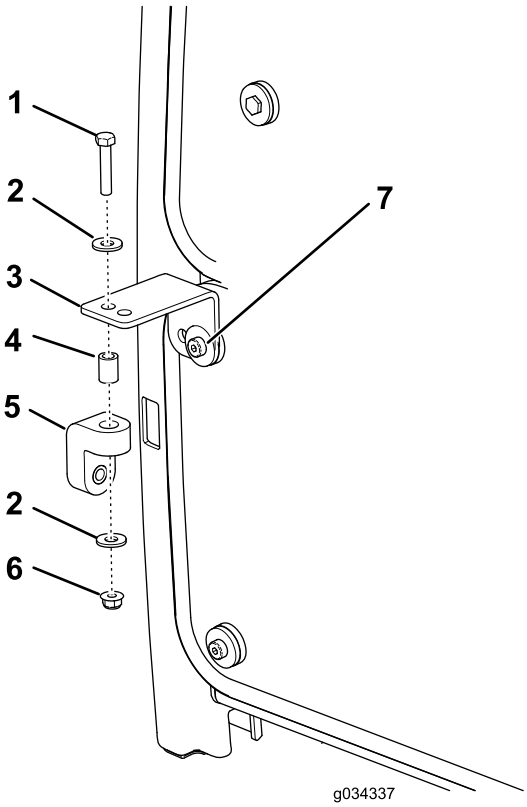

g034337

Figure 8

1. Bolt (5/16 x 1-5/8 inches)
2. Washer
3. Bent-plate bracket
4. Spacer
5. Rubber hanger
6. Flange nut (5/16 inch)
7. Screw (existing)

2. Loosely install a rubber hanger to each bent-plate bracket with a bolt (5/16 x 1-5/8 inch), 2 washers (3/8 inch), a spacer, and a flange nut (5/16 inch) as shown in Figure 8.
3. Loosely install the left and right headlight brackets to the front of the roller-support tube with 6 bolts (3/8 x 2-1/2 inches) and flange nuts (3/8 inch). Position the brackets as shown in Figure 9.

   Note: Ensure that the holes in the bent-plate brackets align with the holes in the rubber hangers.

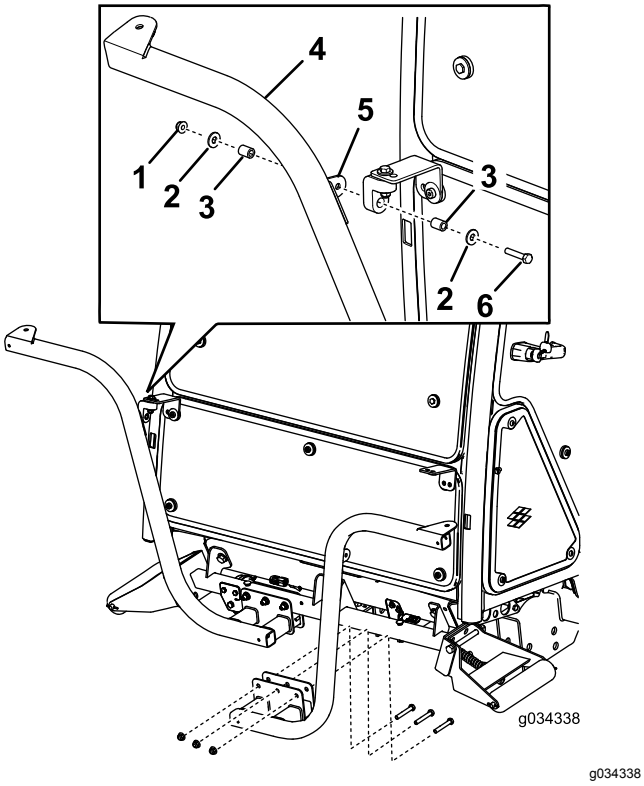

Figure 9

1. Nut (5/16 inch)
2. Washer
3. Spacer
4. Headlight bracket
5. Bracket tab
6. Bolt (5/16 x 1-5/8 inch)

4. Fasten the left and right headlight assemblies to the headlight brackets (Figure 7) with the fasteners supplied in the kit.

   Note: Ensure that the turn-signal lens on the headlight is positioned toward the outside of the traction unit.

5. Tighten the locknut to firmly hold the headlight assembly to the headlight-assembly bracket.

Note: Do not overtighten the locknut.

Note: You cannot use the front and rear cab lights for CE applications. Disable the front and rear cab lights as follows:

- **Front**—Remove the lights from the cab roof and disconnect the wires from the lights. Install the lights into the cab.
- **Rear**—Remove the screws securing the lenses to the lights. Remove the bulbs from the lights and install the lenses to the lights.

4

Installing the Horn

Parts needed for this procedure:

1	Horn
1	Horn bracket
1	Bolt (3/8 x 5/8 inch)
1	Flange nut (3/8 inch)
2	Bolt (1/4 x 2 inches)
2	Nut (1/4 inch)

Procedure

1. Secure the horn strap to the horn bracket with a bolt (3/8 x 5/8 inch) and a flange nut (3/8 inch) as shown in Figure 10.

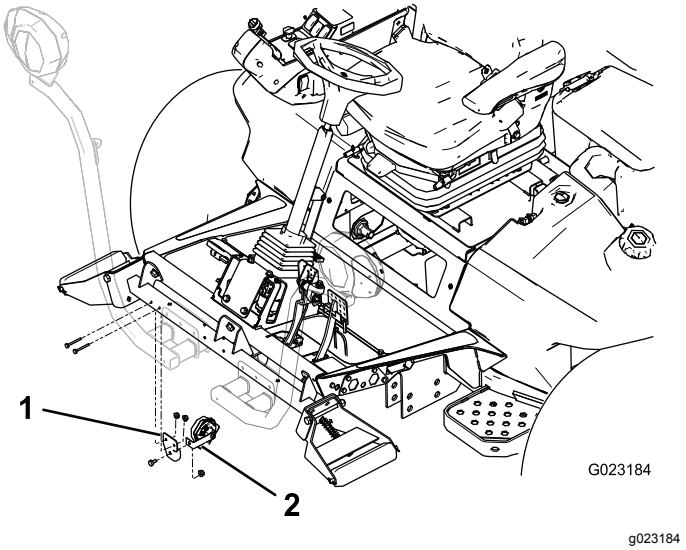

Figure 10

1. Horn bracket
2. Horn strap

2. Mount the horn bracket to the back side of the roller-support tube with 2 bolts (1/4 x 2 inches) and nuts (1/4 inch). Rotate the horn so that it faces down (Figure 10).

5

Installing the Relay Switch

Parts needed for this procedure:

1	Relay switch
1	Serrated hex-head flange bolt (#8 x 1/2 inch)
1	Locknut (#8)

Procedure

Secure the relay switch under the battery cover with a serrated hex-head flange bolt (#8 x 1/2 inch) and a locknut (#8) at the location shown in Figure 11.

Note: Do not overtighten the bolt.

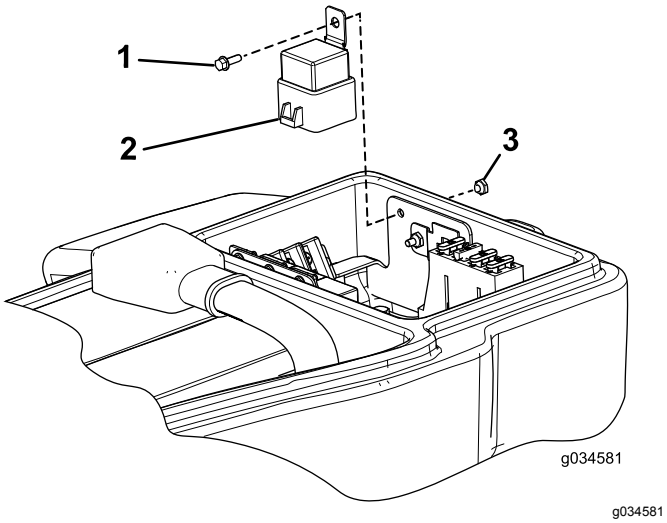

Figure 11

1. Serrated hex-head flange bolt (#8 x 1/2 inch)
2. Relay switch
3. Locknut

6

Installing the Flasher Module and Switches on the Column Bracket

Parts needed for this procedure:

1	Column bracket
1	Flasher module
1	On-Off-On rocker switch
1	Beacon switch
1	Paddle switch
1	Horn switch
1	Horn button
1	Horn decal (Part No. 104-6957)
1	Hex socket button-head screw
2	Speed nut

Procedure

1. Install the components as shown in Figure 12.

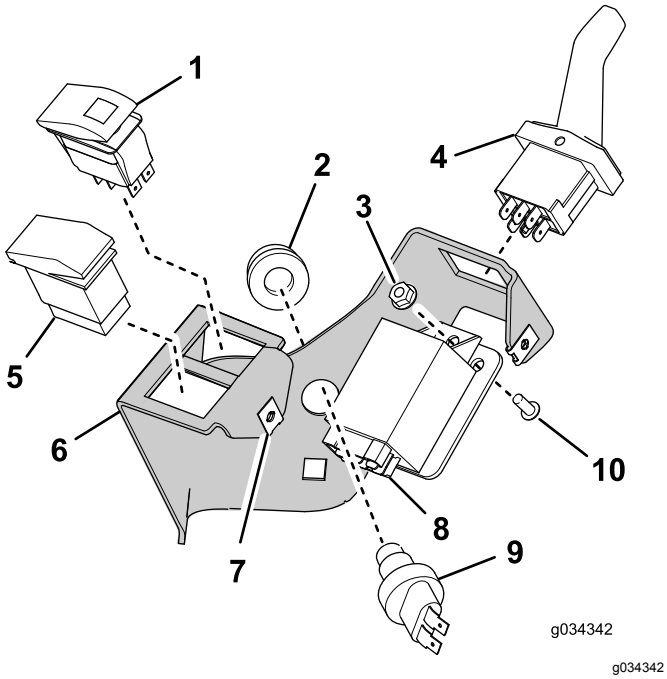

Figure 12

1. On-Off-On rocker switch
2. Horn button
3. Locknut
4. Paddle switch
5. Beacon switch
6. Column bracket
7. Speed nut (2)
8. Flasher module
9. Horn switch
10. Hex socket button-head screw

2. Install the horn decal (Part No. 104-6957) as shown in Figure 13.

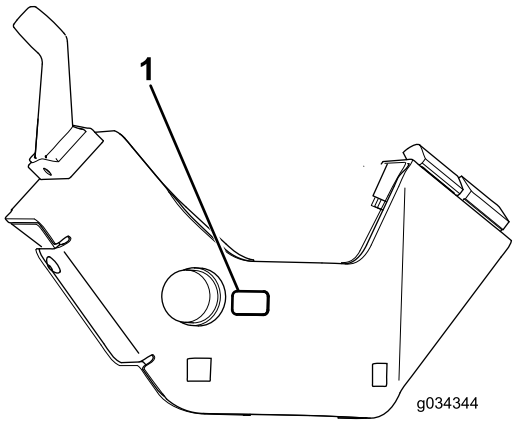

Figure 13

1. Horn decal (Part No. 104-6957)

7

Installing the Column-Bracket Assembly onto the Steering Column

Parts needed for this procedure:

1	Steering-column bracket
1	Column mount bracket
2	Carriage bolt (3/8 x 3/4 inch)
2	Flange nut (3/8 inch)
1	Foam strip
1	Cable tie

Procedure

1. Install the foam strip on the steering column as shown in Figure 14.

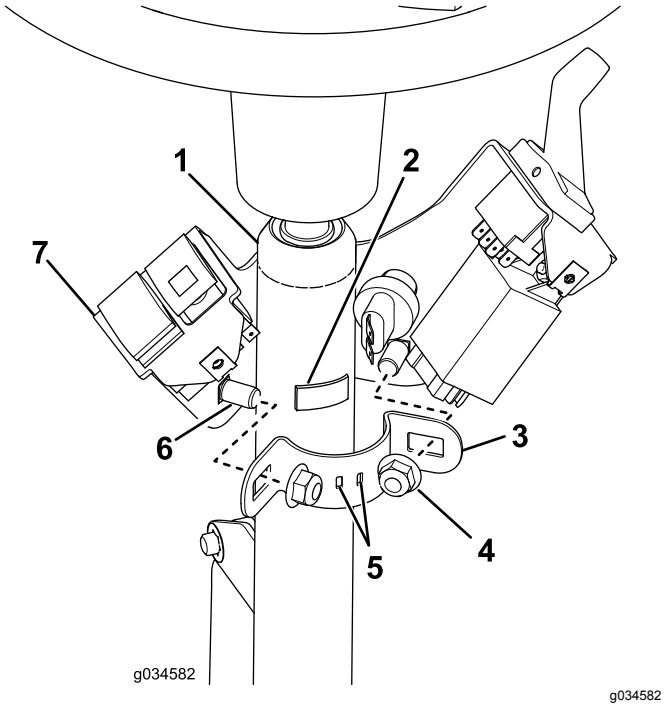

Figure 14

1. Steering column
2. Foam strip
3. Column mount bracket
4. Locknut—3/8 inch (2)
5. The cable tie goes through these slots.
6. Carriage bolt—3/8 x 3/4 inch (2)
7. Column-bracket assembly

2. Insert the cable tie through the slots in the column mount bracket so that the ends are outward, but do not tie them.
3. Install the steering-column bracket onto the steering column with the mounting bracket, 2 carriage bolts, and 2 flange nuts (Figure 14).

   Important: **Ensure that the top of the steering-column bracket is 21 mm (0.83 inch) below the top of the steering column.**

   Important: **Torque the fasteners to 19 to 24 N·m (14 to 18 ft-lb). Do not overtighten the carriage bolts; otherwise, you may deform the steering-column bracket.**

8

Installing the Brake-Sensor Bracket

Parts needed for this procedure:

1	Carriage bolt (#10 x 5/8 inch)
1	Locknut (#10)
1	Sensor plate
2	Flange nut (1/4 inch)
1	Brake-sensor bracket
2	Bolts (1/4 x 3/4 inch)
2	Slotted screw (#6 x 1 inch)
4	Washer (#6)
1	Brake sensor
2	Locknut (#6)

Procedure

Note: This procedure is only for machines with halogen headlights. Use Figure 15 to determine if you have halogen headlights.

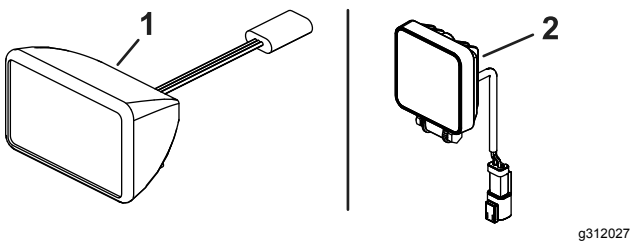

Figure 15

1. Halogen headlight
2. LED headlight

1. Disassemble the proximity-sensor assembly on the brake-pedal lever (Figure 16) and set aside all the parts except the proximity sensor.

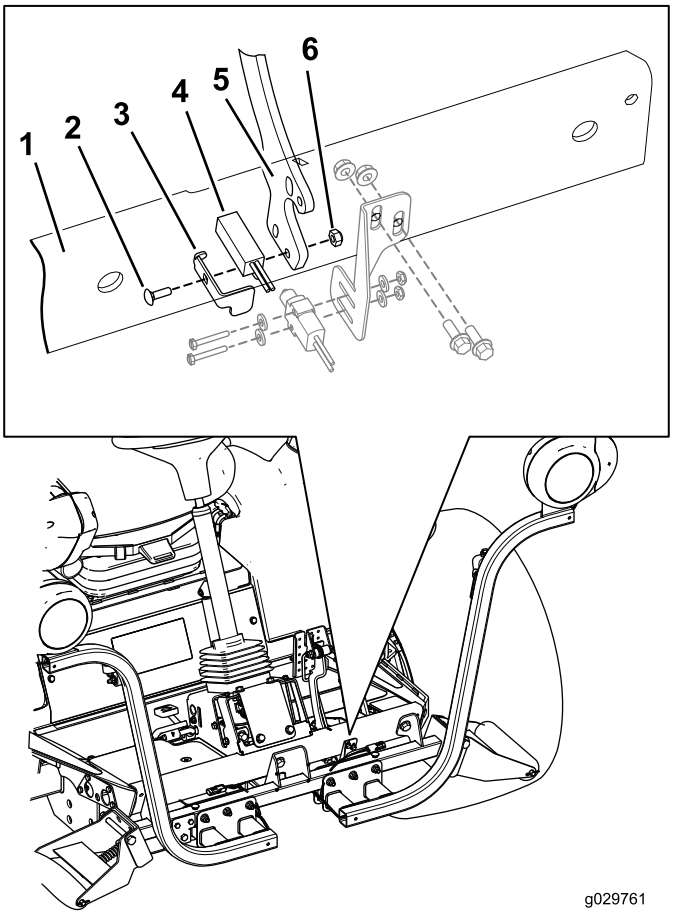

Figure 16

1. Forward footrest
2. Carriage bolt (#10 x 5/8 inch)
3. Brake-sensor plate
4. Proximity sensor
5. Brake-pedal lever
6. Locknut (#10)

2. Assemble the proximity-sensor assembly to the brake lever using the carriage bolt (#10 x 5/8 inch), brake-sensor plate, proximity sensor, and locknut (#10) as shown in Figure 16.

   Note: Ensure that you do not overtighten the bolts. Overtightening the bolts will damage the sensor.

3. Locate the brake-sensor bracket mounting holes on the front footrest and loosely install the brake-sensor bracket to the front footrest using 2 bolts (1/4 x 3/4 inch) and 2 flange nuts (1/4 inch).

   Note: You will need to move the brake-sensor bracket up or down to align the brake sensor to the brake-sensor plate (Figure 17).

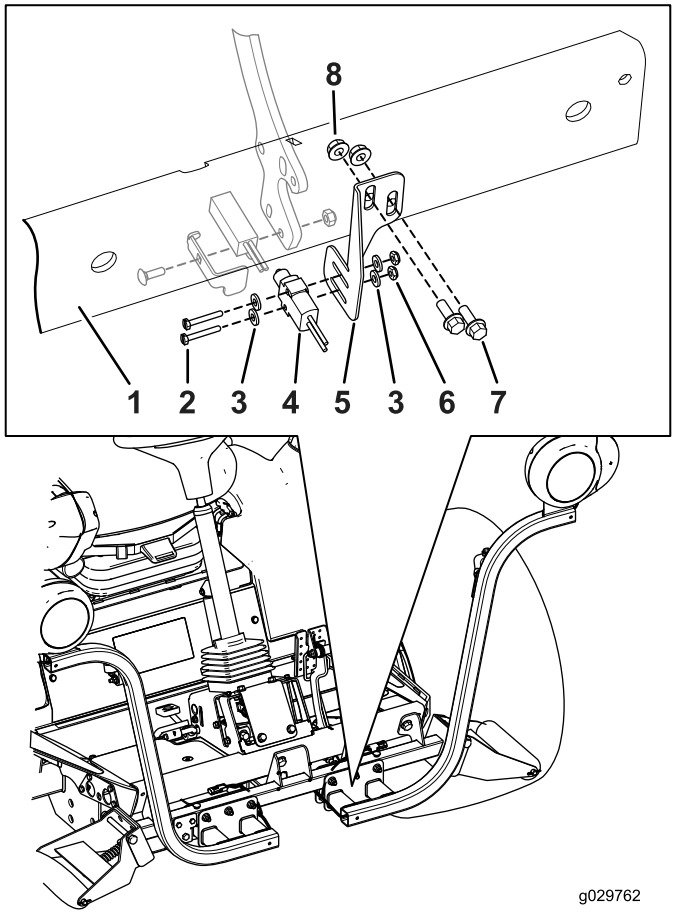

Figure 17

1. Forward footrest
2. Slotted screw (#6 x 1 inch)
3. Washer (#6)
4. Brake sensor
5. Brake-sensor bracket
6. Locknut (#6)
7. Bolts (1/4 x 3/4 inch)
8. Flange nut (1/4 inch)

4. Loosely install the brake sensor to the brake-sensor bracket with the 2 slotted screws (#6 x 1 inch), 2 washers, and 2 flange nuts (Figure 17).
5. Align the brake sensor in or out and the brake-sensor bracket up or down so that the switch on the brake sensor is pressing against the sensor plate.
6. Complete the brake-sensor assembly installation by tightening all of the mounting hardware.
   - Tighten the 2 slotted screws (#6 x 1 inch) and 2 flange nuts to firmly secure the brake sensor to the brake-sensor bracket.

     Note: Ensure that you do not overtighten the screws. Overtightening the screws will damage the sensor.
   - Tighten the bolts (1/4 x 3/4 inch) and 2 flange nuts (1/4 inch) holding the brake-sensor bracket to the front footrest to 1,017 to 1,243 N·cm (90 to 110 in-lb).

Important: **After you complete the installation of the light kit, verify that the brake sensor activates the brake lights when the brake pedal is pressed. Realign the brake sensor if necessary.**

9

Installing the Rear Lamps

Parts needed for this procedure:

1	Left light bracket
1	Right light bracket
4	Screw (5/8 x 3 inches)
4	Flat washer
2	Jam nut (5/8 inch)
2	Rear-lamp assembly

Procedure

1. Remove the 2 bolts, 2 washers, and 2 nuts securing the reservoir-mounting bracket to the left frame rail (Figure 18).

   Note: Stabilize the reservoir and bracket to prevent them from falling.

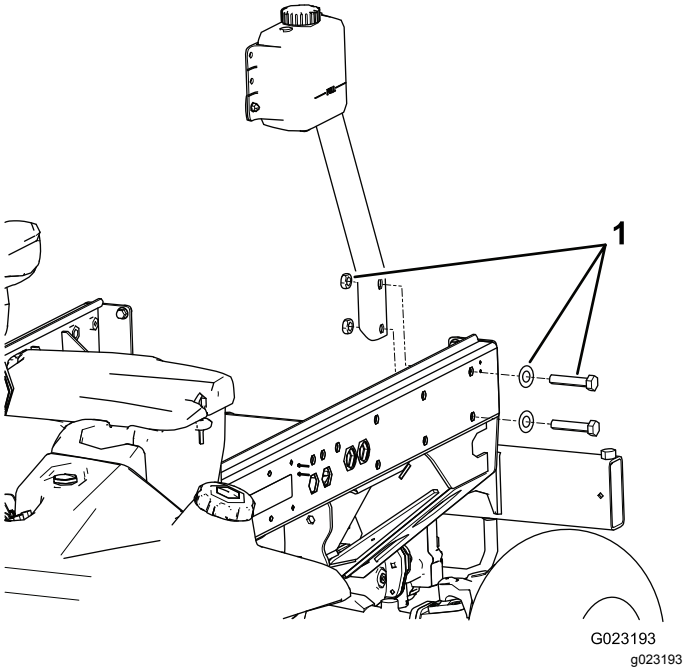

Figure 18

1. Reservoir bracket mounting bolts, washers, and nuts

2. Secure the left light bracket to the bracket and frame with 2 bolts (5/8 x 3 inches), 2 flat washers and 2 jam nuts as shown in (Figure 19).

Note: The left and right light brackets are different. Ensure that you use the correct mount.

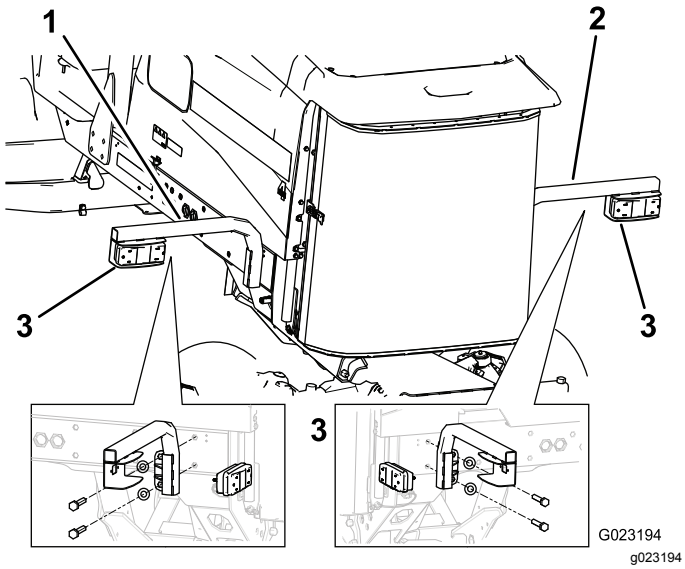

Figure 19

1. Left light bracket
2. Right light bracket
3. Rear lamp

3. Mount the rear lamp to light bracket with the bolts and nuts included with the light (Figure 19).

   Note: Ensure that the light is positioned so that the plug is through the hole in the light bracket and the amber end is toward the outside of the traction unit.

4. Remove the 2 rear bolts and 2 washers from the right frame rail (Figure 20).

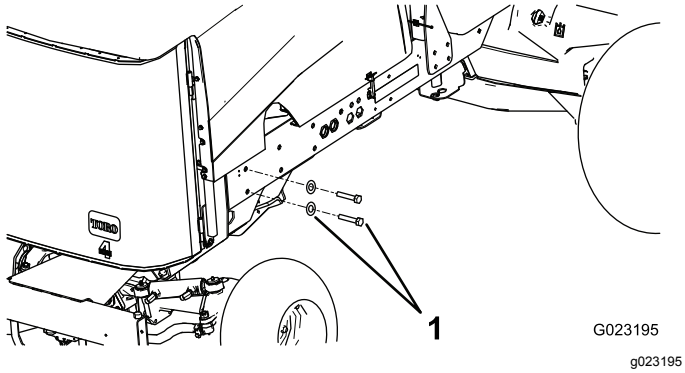

Figure 20

1. Bolts and washers

5. Secure the right light bracket to the frame with 2 bolts (5/8 x 3 inches) and 2 flat washers (Figure 19).

10

Installing the License-Plate Bracket

Parts needed for this procedure:

1	Plate light
1	Plate bracket
2	Screw (#10 x 5/8 inch)
2	Locknut (#10)
2	Self-tapping screw (5/16 x 1/2 inch)

Procedure

1. Secure the plate light to the license-plate bracket with 2 screws (#10 x 5/8 inch) and 2 locknuts (Figure 21).

   Note: Do not overtighten the screws. Ensure that the lens points downward and the wires are inserted through the hole in the license-plate bracket.

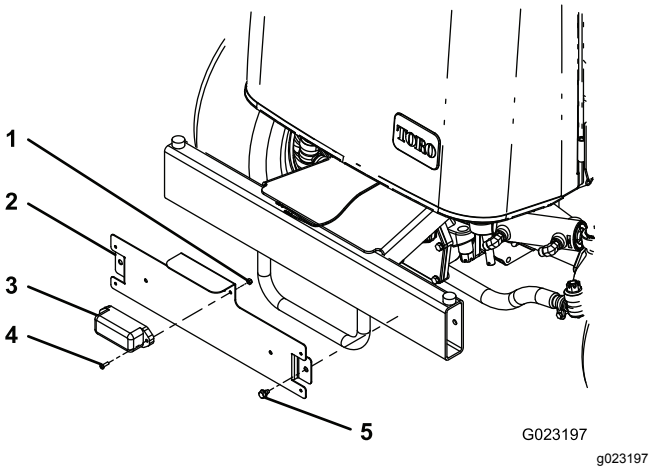

Figure 21

1. Locknut (#10)
2. License-plate bracket
3. Plate light
4. Screw (#10 x 5/8 inch)
5. Self-tapping screw (5/16 x 1/2 inch)

2. Mount the license-plate bracket to the rear bumper with 2 self-tapping screws (5/16 x 1/2 inch) as shown in Figure 21.

   Note: Position the license-plate bracket as shown in Figure 21.

11

Installing the Wire Harness

Parts needed for this procedure:

1	Wire harness
1	Switch-panel-enclosure cover
3	Screw (#10 x 1/2 inch)
3	Mounting pad
11	Cable tie
2	Jumper wire harness (LED headlights only)

Procedure

Use the following instructions and illustrations to route and connect the wire harness.

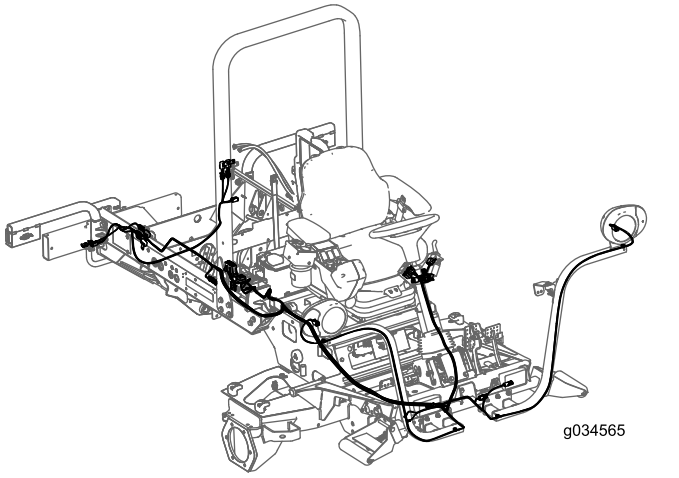

Figure 22

1. Remove the flange-head screw securing the compartment clamp and seal to the traction unit (Figure 23).

   Note: Remove the clamp and seal to gain access to the fuse compartment.

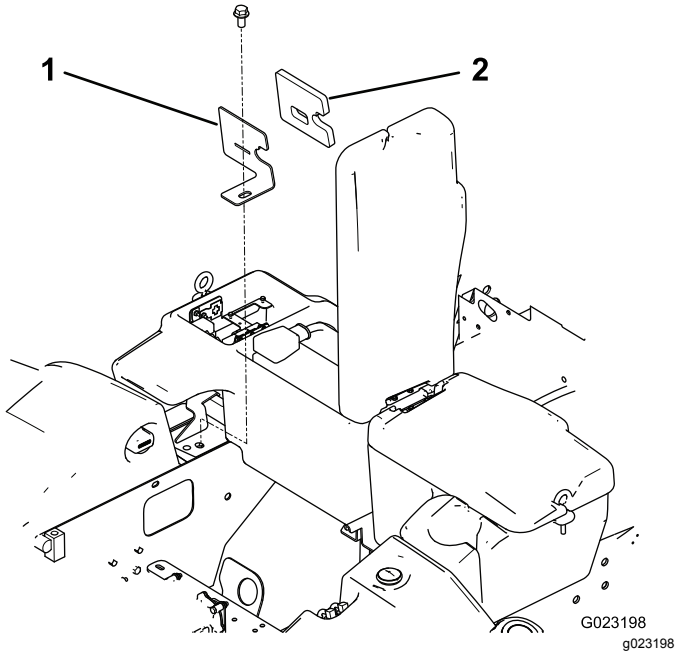

Figure 23

1. Compartment clamp 2. Seal

2. From under the right side of the traction unit, route the fuse-block section of the wire harness up to and into the opening in the fuse compartment (Figure 24).

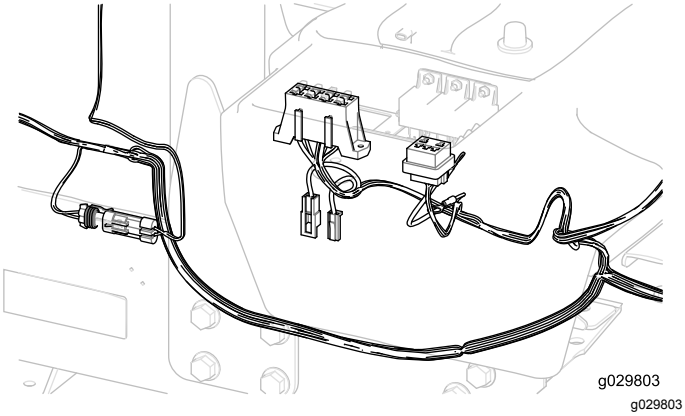

Figure 24

Important: **When routing the wire harness, do not pull it across sharp edges, which may damage the wires. Wires must not contact hot or moving parts. Secure the wire harness with cable ties.**

3. Mount the wire-harness-fuse block next to the existing fuse block with the 2 self-tapping screws (#8 x 1/2 inch) included with the wire harness (Figure 25).

   Note: Do not overtighten the screws.

4. Connect the small-ring terminal from the wire harness to 1 of the screws on the ground-block terminal (Figure 25).

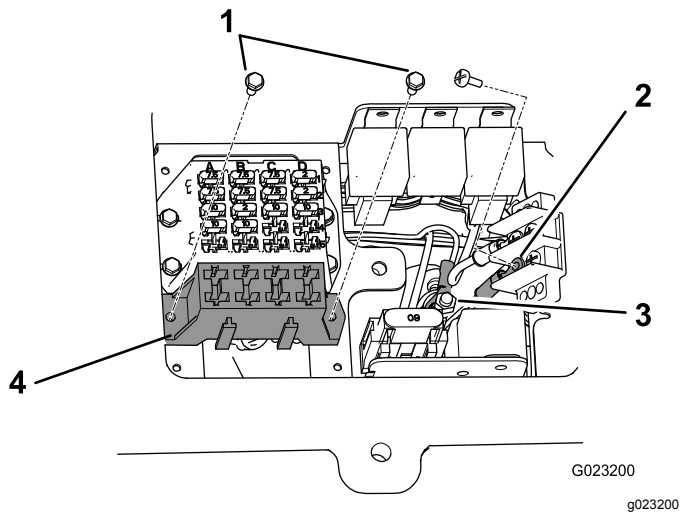

Figure 25

1. Self-tapping screws (#8 x 1/2 inch)
2. Ground-block terminal
3. Junction block
4. Wire harness fuse block

5. Connect the large-ring terminal, from the wire harness, to the stud on the junction block (Figure 25).
6. Install the compartment clamp and seal to the traction unit with the flange-head screw (Figure 23).
7. Route the front end of the wire harness under the operator platform to the front of the traction unit (Figure 26).

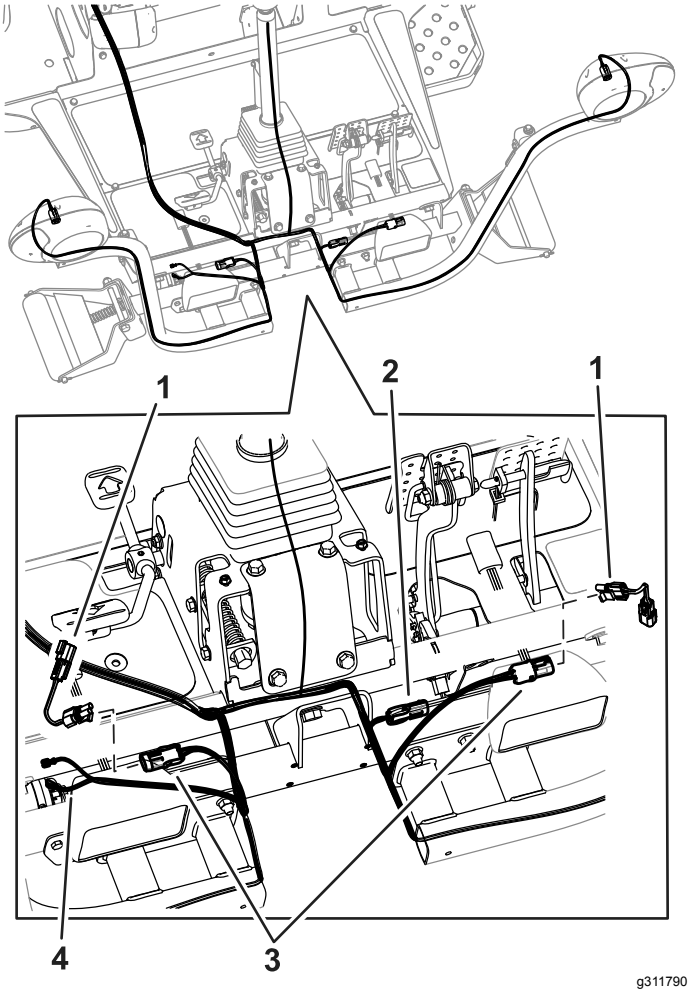

Figure 26

1. Jumper wire harness for machines with LED headlights
2. Brake connector for machines with halogen headlights
3. Connectors for headlights
4. Horn connectors

Note: Use Figure 27 or Figure 15 to determine which headlight you have.

8. For machines with LED headlights, install the jumper wire harnesses shown in Figure 26.
9. Thread each harness connector through the appropriate headlight bracket and connect it to the headlight (Figure 26).
10. Plug the wire harness lead, with the 2 connectors, into the horn (Figure 26).
11. Position the platform shroud on top of the frame (Figure 27).
12. Plug the light-kit wire harness connectors into the shroud headlights (Figure 27).

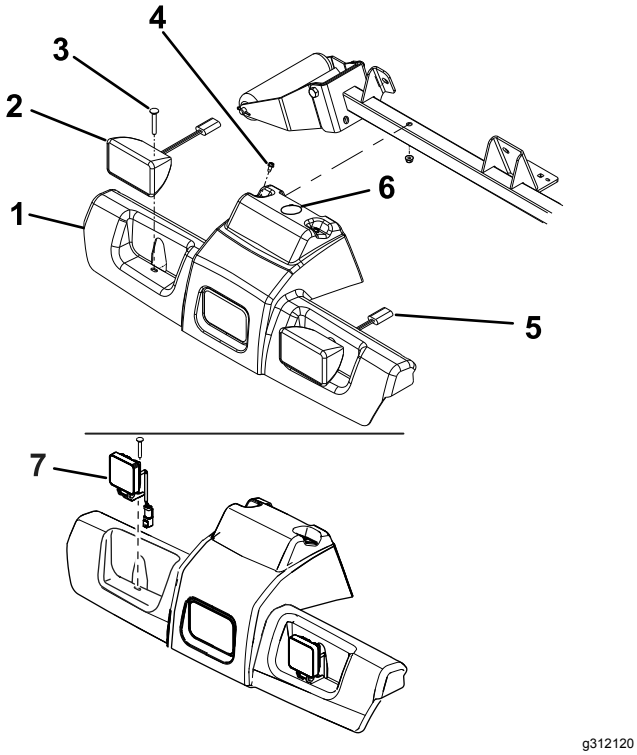

g312120

Figure 27

1. Platform shroud
2. Halogen headlight
3. Carriage bolt and nut
4. Washer-head screws and nuts
5. Headlight wire connectors
6. Hole for wire harness
7. LED headlight

13. Secure the shroud and the headlights to the frame with the 2 carriage bolts and nuts you previously removed (Figure 27).
14. Route the wire harness to the column-bracket assembly on the steering column.
15. Plug the connectors into the flasher module, horn, turn signal, and hazard switches (Figure 28).

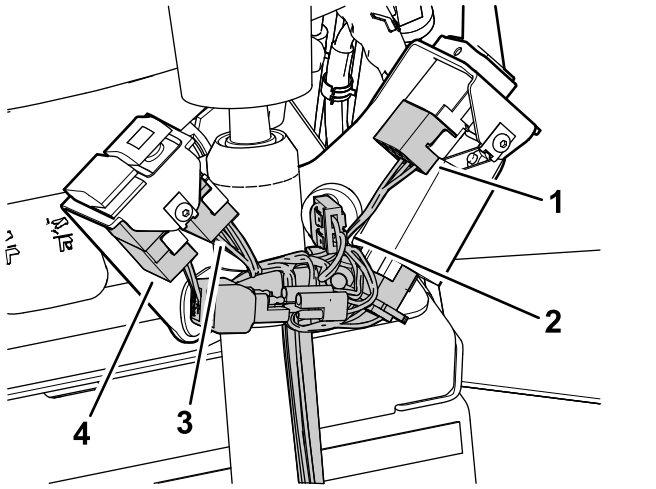

g312684

Figure 28

1. Turn signal connector
2. Horn connector
3. Hazard connector
4. Beacon connector

16. Install the cover onto the column-bracket assembly with 2 hex socket button-head screws as shown in Figure 29.

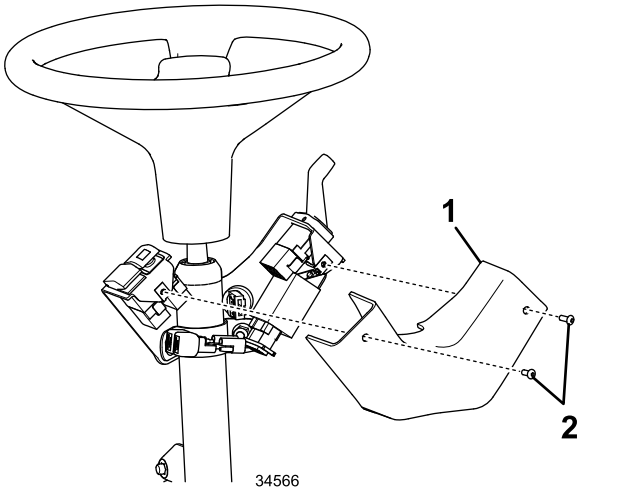

g034566

Figure 29

1. Cover
2. Hex socket button-head screws

17. Secure the wire harness to the column using the cable tie inserted into the slots in the column mount bracket; refer to Figure 14.
18. Route the right rear wire harness under the right side of the traction unit to the right, rear light (Figure 30).

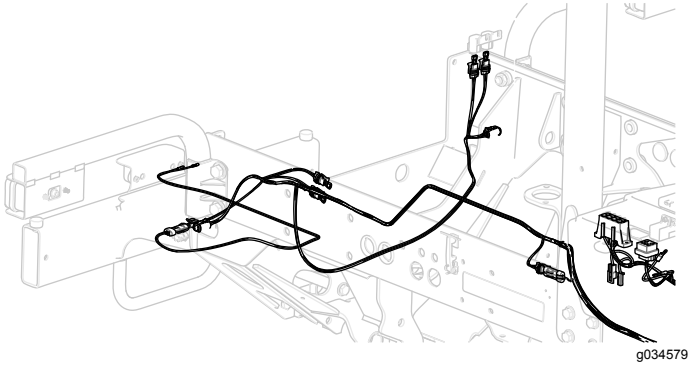

g034579

Figure 30

19. Plug the wire-harness connector into the light connector.
20. Route the left, rear wire harness under the left side of the traction unit to the left, rear light (Figure 30).

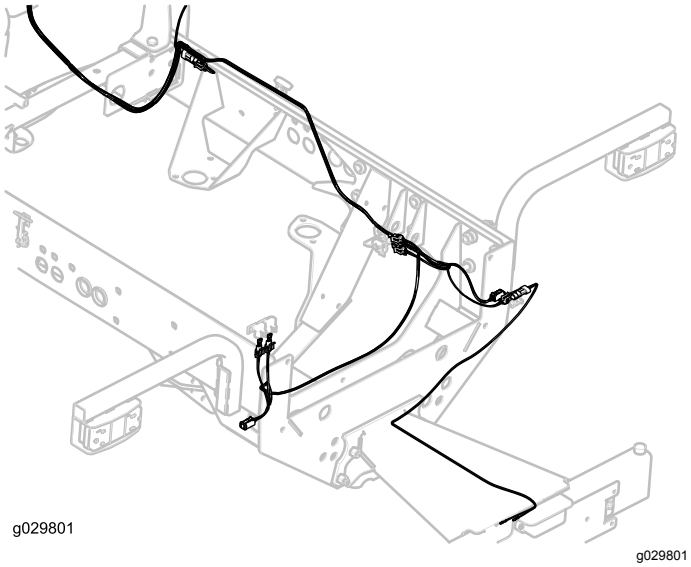

g029801

g029801

Figure 31

21. Plug the wire-harness connector into the light connector.
22. Route the wire harness to the registration-plate light and plug the wire-harness connector into the light connector (Figure 31).

    Important: **Secure the wire harness with cable ties so that it does not contact any hot or moving parts.**
23. Install any parts that were removed from the traction unit to route the wire harness.

12

Installing the Fuses and Decal

Parts needed for this procedure:

3	Fuse (10 A)
1	Fuse (15 A)
1	Fuse-box decal

Procedure

1. Insert the 3 (10 A) and 1 (15 A) fuses into the fuse block slot (Figure 32).

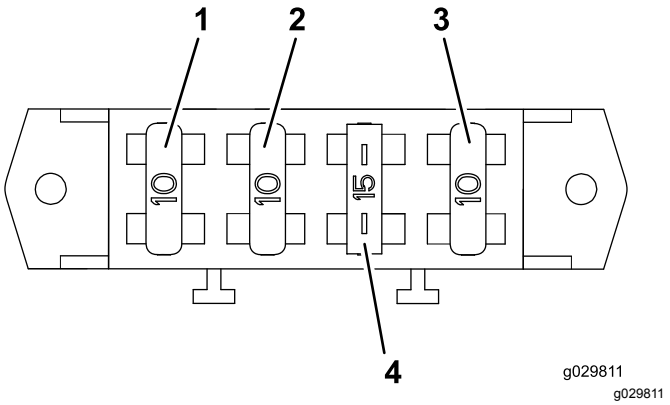

g029811

g029811

Figure 32

1. Fuse (10 A)
2. Fuse (10 A)
3. Fuse (10 A)
4. Fuse (15 A)

2. Install the fuse-box decal to the storage-box cover (Figure 33).

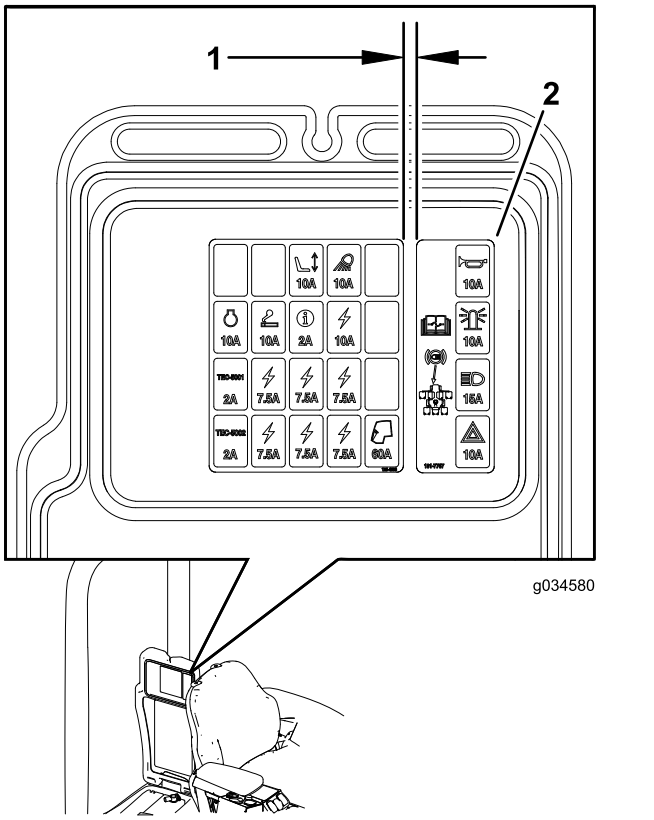

Figure 33

1. 6 mm (1/4 inch)
2. Fuse-box decal

13

Installing the Decal-Mounting Plates

Parts needed for this procedure:

2	Plate
4	Decal
4	Hex-head screw (1/4 x 2-1/2 inches)
4	Locknut (1/4 inch)

Procedure

1. Align the plates with the existing holes in the light-kit brackets (Figure 34).

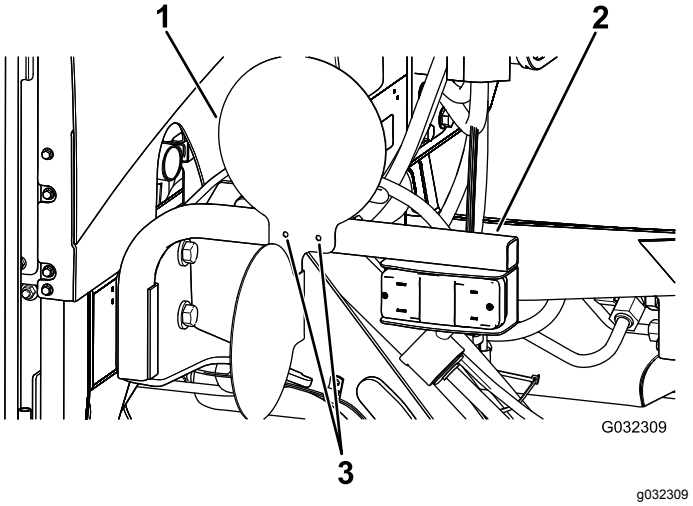

Figure 34

Right side shown

1. Plate
2. Light-kit bracket
3. Holes

2. Secure the plates to the light-kit brackets with the 4 hex-head screws (1/4 x 2-1/2 inches) and 4 locknuts (1/4 inch) as shown in Figure 35.

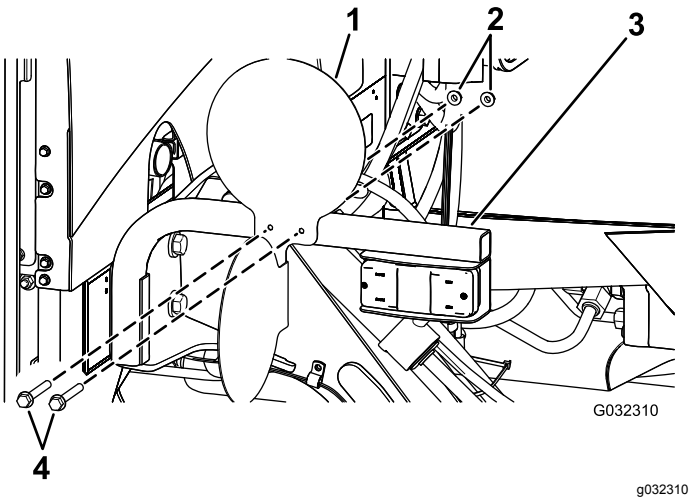

Figure 35

Right side shown

1. Plate
2. Locknuts (1/4 inch)
3. Light-kit bracket
4. Hex-head screws (1/4 x 2-1/2 inches)

3. Apply the decals to the outward-facing surface of the plates (Figure 36).

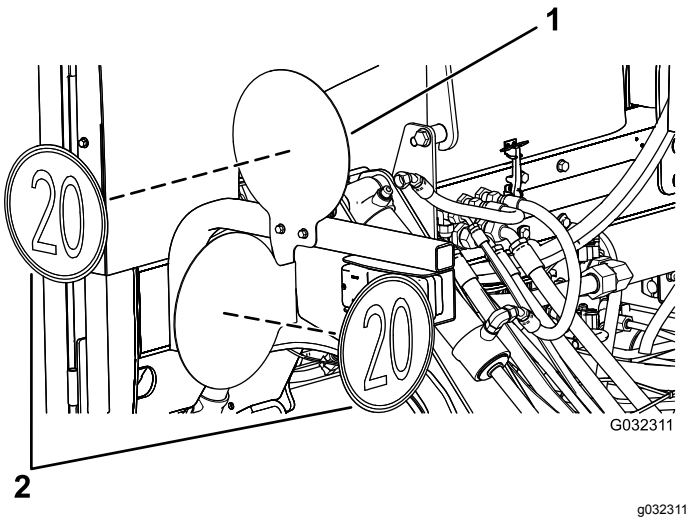

Figure 36
Right side shown

1. Plate
2. Decals

14

Connecting the Battery

No Parts Required

Procedure

Connect the battery; refer to your machine *Operator's Manual*.

Operation

Controls

Hazard Switch

Press the hazard switch (Figure 37) to the ON position to activate the front and rear flashing hazard lights.

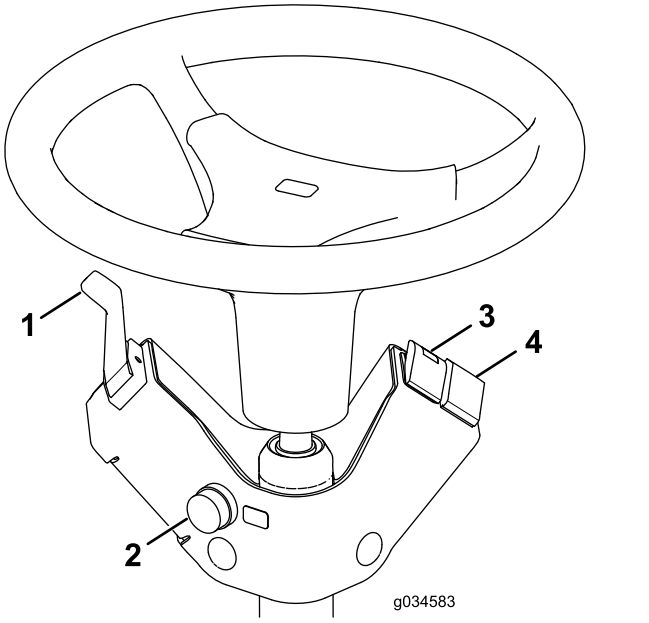

Figure 37

1. Turn signal switch
2. Horn button
3. Hazard switch
4. Beacon switch (optional)

Turn-Signal Switch

Press down on the left side of the turn-signal switch (Figure 37) to activate the left-turn signal. The center position is off.

Press down on the right side of the turn-signal switch (Figure 37) to activate the right-turn signal. The center position is off.

Beacon Switch (Optional)

Press the beacon switch (Figure 37) to activate the beacon.

Horn Button

Press the horn button (Figure 37) to activate the horn.

Aiming the Headlights

1. Loosen the mounting nuts and position each headlight so that it points straight ahead.
2. Tighten each mounting nut just enough to hold the headlight in position.
3. Place a flat piece of sheet metal over the face of the headlight.
4. Mount a magnetic protractor onto the plate.
5. While holding the assembly in place, carefully tilt the headlight downward 3 degrees, then tighten the nut.
6. Repeat the procedure for the other headlight.



Count on it.