Form No. 3324-179

TORO®

E120 Carefree® Electric

Walk Power Lawn Mower

Model No. 20050—200000001 and Up

Operator's Manual

Para obtener una versión gratis de este manual en español, escriba a la dirección indicada más abajo. Asegúrese de indicar el modelo y el número de serie de su producto.

Pour obtenir gratuitement une version en français de ce manuel, écrivez à l'adresse ci-dessous. N'oubliez pas d'indiquer les numéros de modèle et de série de votre produit.

The Toro Company, Attn: Parts Dept., 8111 Lyndale Ave S, Bloomington, MN 55420-1196

Domestic English (EN)

Contents

	Page
Introduction	2
Safety	2
Safe Operating Practices	3
General Operation	3
While Operating	4
Maintenance And Storage	4
Safety and Instruction Decals	5
Assembly	6
Installing the Handle	6
Installing the Side Discharge Chute	7
Before Starting	8
Securing the Extension Cord	8
Planning Your Mowing Pattern	9
Operation	9
Starting the Lawn Mower	9
Stopping the Lawn Mower	10
Mowing Tips	10
Adjusting the Cutting Height	11
Maintenance	12
Recommended Maintenance Schedule	12
Cleaning the Lawn Mower Housing	12
Maintaining the Blade	13
Servicing a Double-insulated Lawn Mower	14
Servicing the On/Off and Blade Brake Systems	14
Troubleshooting	15
Storage	15
The Toro Promise	16

Introduction

Thank you for choosing a Toro product. We want you to be completely satisfied with your new purchase.

Read this manual carefully to learn how to operate and maintain your product properly. The information in this manual can help you and others avoid injury and product damage. Although Toro designs and produces safe products, you are responsible for operating the product properly and safely.

Whenever you contact your Authorized Service Dealer or the factory for help with service, genuine Toro parts, or additional information, have the model number and the serial number of your product handy. You will find the model number and serial number decal on the product as illustrated in Figure 1.

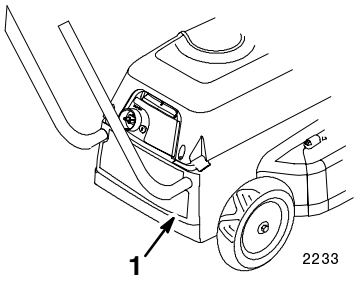

Figure 1

1. Model number and serial number decal

Write the product model number and serial number in the space below:

Model No. _____

Serial No. _____

This manual identifies potential hazards and has special safety messages that help you and others avoid personal injury and even death. DANGER, WARNING, and CAUTION are words used to identify the level of hazard.

DANGER signals an extreme hazard that will cause serious injury or death if you do not follow the recommended precautions.

WARNING signals a hazard that may cause serious injury or death if you do not follow the recommended precautions.

CAUTION signals a hazard that may cause minor or moderate injury if you do not follow the recommended precautions.

This manual uses two other words to highlight information. **Important** calls attention to special mechanical information and **Note** emphasizes general information worthy of special attention.

Safety

IMPORTANT SAFETY INSTRUCTIONS

This machine meets or exceeds CPSC blade safety requirements for walk-behind rotary lawn mowers and the B71.1 specifications of the American National Standards Institute, in effect at time of production. However, improper use or maintenance by the operator or owner can result in injury. To reduce the

©2000 The Toro Company
All Rights Reserved

Printed in USA

potential for injury, comply with these safety instructions and always pay attention to the safety alert ⚠ symbol which means CAUTION, WARNING or DANGER—"personal safety instruction." Failure to comply with the instruction may result in personal injury.

READ ALL INSTRUCTIONS BEFORE USING THIS MOWER

SAVE THESE INSTRUCTIONS FOR FUTURE REFERENCE!

⚠ WARNING ⚠

To reduce the risk of personal injury while using the electric lawn mower, always follow these basic safety instructions.

Safe Operating Practices

This product is capable of amputating hands and feet and throwing objects. Always follow all safety instructions to avoid serious injury or death.

Toro designed this lawn mower for cutting and mulching grass or, when equipped with a grass bag, for catching cut grass. Any use for purposes other than these could prove dangerous to the user or bystanders.

General Operation

- Read this manual carefully before operating the lawn mower. Become familiar with the controls and proper use of the lawn mower. Never allow children under 16 years of age to operate the lawn mower. Never allow adults to operate lawn mower without proper instructions.
- The operator of the lawn mower is responsible for keeping everyone, especially children and pets, away from area of operation. The operator is responsible for accidents or hazards occurring to other people or their property.
- Thoroughly inspect area where lawn mower will be used and remove sticks, stones, wire, and debris that could be picked up and thrown by lawn mower. Watch for foreign objects while mowing.
- Wear long pants and substantial non-skid rubber soled shoes. Do not operate lawn mower while wearing open-toed shoes, jewelry, loose clothing or when barefoot. Use of rubber gloves and footwear is recommended when working outdoors.
- Keep all guards, shields, safety devices, side discharge chute or optional grass catcher in place. Repair or replace damaged parts, including decals. Never tamper with safety devices. Check all safety devices before each use.
- Motor and blade are designed to stop within three seconds when the control bail is released. Ensure that the control bail functions properly before each use of lawn mower. If the blade does not stop within three seconds, or if there is a grinding or scraping metal-to-metal noise when the control bail is released, contact an Authorized Service Dealer for the proper *On*/*Off* and blade brake adjustment or replacement.
- Before using, always visually inspect to see that the blades, blade fasteners, and cutter assembly are not worn or damaged. Replace worn or damaged blades and fasteners in sets to preserve balance.
- Only use those accessories and attachments designed to be used with this product. Use of any accessory or attachment not designed for this product may increase the risk of injury.
- Ground Fault Circuit Interrupter (GFCI) protection should be provided on the circuit(s) or outlet(s) to be used for the lawn mower. Receptacles are available having built-in GFCI protection and may be used for this measure of safety.
- **WARNING:** To prevent electric shock, use only an extension cord suitable for outdoor use, such as SW-A, SOW-A, STW-A, STOW-A, SJW-A, SJOW-A, SJTW-A, or SJTOW-A.
- Make sure that your extension cord set is in good condition. When using an extension cord, be sure to use one heavy enough to carry the current your product will draw. Refer to the *Extension Cord Chart* on page 8. An undersized cord will cause a drop in line voltage and result in a loss of power and overheating.
- Properly connect the extension cord to the lawn mower to prevent the cord from disconnecting (Fig. 12).
- To reduce the risk of electric shock, this lawn mower has a polarized plug (one blade is wider than the other) (Fig. 11) and will require the use of a polarized extension cord. The polarized extension cord receptacle will fit onto the lawn mower plug only one way. If the extension cord receptacle does not fit fully onto the lawn mower plug, reverse the cord receptacle. If the cord receptacle still does not fit, obtain a correct polarized extension cord. A polarized extension cord will require the use of a polarized wall outlet. The extension cord plug will fit into the polarized wall outlet only one way. If the cord plug does not fit fully into the wall outlet, reverse the cord plug. If the cord plug still does not fit, contact a qualified electrician to

install the proper wall outlet. Do not change the lawn mower plug, extension cord receptacle, or extension cord plug in any way.

While Operating

- Do not connect the extension cord to the lawn mower until you are ready to mow.
- Do not operate lawn mower in gaseous, explosive atmospheres. Normal sparking of motor could ignite fumes.
- Start the motor carefully according to instructions and with feet well away from the blade.
- Use the right appliance—do not use the lawn mower for any purpose except that for which it is intended.
- Stay alert; watch what you are doing. Do not operate the lawn mower when tired or under the influence of drugs, alcohol, or medication.
- Use extra care when approaching blind corners, shrubs, trees, or other objects that may obscure vision.
- Do not mow near drop-offs, ditches, or embankments. The operator could lose footing or balance.
- Do not run motor indoors.
- Avoid dangerous environments. Never operate the lawn mower in wet grass or damp locations. Do not use lawn mower in the rain.
- Always maintain secure footing. Keep a firm grip on the handle and walk; never run. Mow only in daylight or in good artificial light.
- Mow across the face of slopes; never up and down. Use extreme caution when changing direction on slopes. Do not mow excessively steep slopes. Wear skid resistant shoes on slopes.
- Don't Overreach—Keep proper footing and balance at all times.
- Do not force the lawn mower. It operates best and safest at the rate for which it was designed.
- Always wear safety glasses or eye shields during operation to protect eyes from foreign objects that may be thrown from the machine. (Regular eyeglasses are **not** safety glasses.)
- Always wear an approved dust mask when using unit in dusty conditions.
- Keep face, hands, and feet away from the lawn mower housing and cutter blade when the motor is running. Blade can cause injury to hands and feet. Stay behind the handle until the motor stops.
- Use extreme caution when reversing or pulling the lawn mower toward you. Before and while moving backwards, look behind and down for small children.
- Since the blade rotates for a few seconds after the control bar is released, stay behind the handle until all moving parts stop.
- After striking a foreign object or if lawn mower vibrates abnormally, stop motor and disconnect the extension cord from the lawn mower. Check lawn mower for damage and make all repairs before using lawn mower again. If major repairs are ever needed or if assistance is desired, contact your local Authorized Service Dealer.
- Do not operate lawn mower if it has been dropped or damaged in any way. Repair any damage before operating lawn mower.
- Do not run the lawn mower over the extension cord.
- Inspect the extension cord periodically and replace it if it is damaged.
- Don't abuse the extension cord. Never pull the lawn mower by the cord or yank the cord to disconnect it from the receptacle. Keep the cord away from heat, oil, and sharp edges.
- Stop the motor, wait for all moving parts to stop, and disconnect the extension cord from the lawn mower before adjusting the cutting height.
- Stop the motor when pushing the lawn mower outside the lawn area.
- Stop the motor and disconnect the extension cord from the lawn mower before removing the side discharge chute or the optional grass catcher.
- Stop motor before leaving the operating position. Disconnect the extension cord from the lawn mower if you leave the lawn mower unattended.
- If you must lift the lawn mower to transport it, stop the motor, stay behind the handle until all moving parts stop, and disconnect the extension cord from the lawn mower.

Maintenance And Storage

- Perform only those maintenance instructions described in this manual. If major repairs are ever needed or if assistance is desired, contact your local Authorized Toro Service Dealer.
- Before lawn mower is cleaned, inspected, serviced, or adjusted, stop motor and wait for all moving parts to stop. Disconnect the extension cord from the lawn mower.

- To ensure that the lawn mower is in safe operating condition, frequently check and keep all nuts, bolts, and screws tight. Ensure that the blade bolt is tightened to 45 to 50 ft-lb (61 to 68 N·m).
- Always keep a sharp blade on your lawn mower. When servicing blade, refer to blade maintenance section for correct installation and servicing procedures. Use identical replacement blades only.
- To reduce fire hazard, keep motor free of excessive grass, leaves, and accumulations of dirt.
- This unit is provided with double insulation. Use only identical replacement parts. Refer to *Servicing of a Double-insulated Lawn Mower* on page 14.
- Check optional grass catcher bag frequently for wear or deterioration. Replace with a new bag when worn or damaged for your protection.
- When not in use, disconnect the extension cord from the lawn mower and store lawn mower indoors in a dry, locked-up place out of the reach of children. Allow motor to cool before storing in an enclosure.
- At the time of manufacture, the lawn mower conformed to the safety standards in effect for rotary lawn mowers. To assure best performance and continued safety certification of the lawn mower, use genuine Toro replacement parts and accessories. Replacement parts and accessories made by other manufacturers may result in non-conformance with the safety standards, and that could be dangerous.

SAVE THESE INSTRUCTIONS FOR FUTURE REFERENCE!

Safety and Instruction Decals

Safety decals and instructions are easily visible to the operator and are located near any area of potential danger. Replace any decal that is damaged or lost.

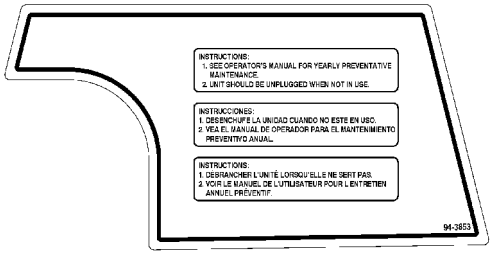

ON CONTROL PANEL



ON MULCH PLUG



ON MULCH PLUG



ON REAR OF MOWER



ON MULCH PLUG

Assembly

Note: Determine the left and right sides of the lawn mower by standing in the operating position.

IMPORTANT: Do not connect extension cord to the lawn mower until the lawn mower is fully assembled. Always unplug the extension cord from the lawn mower when adding or switching attachments.

Installing the Handle

IMPORTANT: The control cable must be over, not under, the handle (Fig. 2).

WARNING

POTENTIAL HAZARD
- **Pulling on the control cable excessively may cause the lawn mower to start. When the lawn mower is operating, the blade is rotating.**

WHAT CAN HAPPEN
- **Contact with the rotating lawn mower blade could cause serious personal injury.**

HOW TO AVOID THE HAZARD
- **Do not lift the lawn mower by the control cable or pull excessively on the cable.**

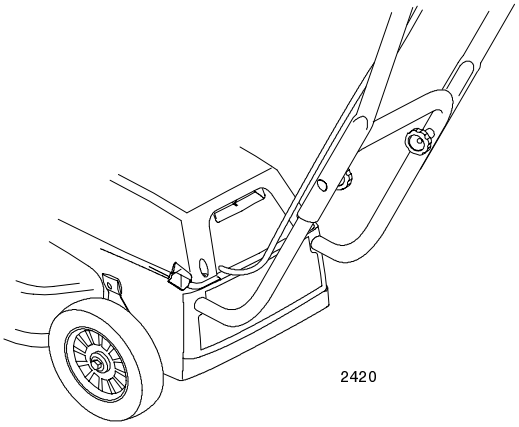

Figure 2

1. Lift the control cable above the holes in the rear of the shroud.
2. Slide the ends of the lower handle into the holes in the shroud.

Note: If the handle stops before the screw holes align in the center of the shroud openings, push down on the lower handle section while pushing the tubes into the holes in the shroud (Fig. 3). Push the tubes in until the screw holes are centered in the shroud openings.

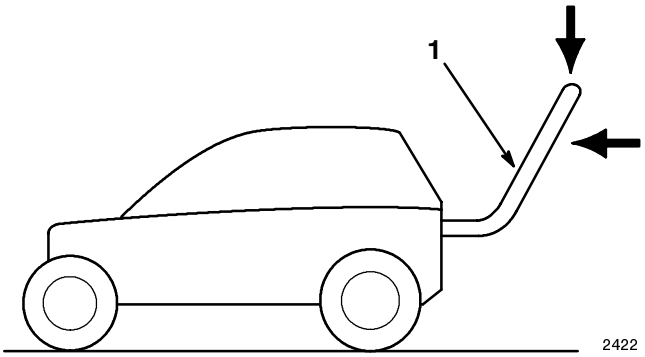

Figure 3

1. Lower handle

3. Secure the ends of the lower handle with two screws.

Note: The handle height adjusts to two different heights for operator comfort.

4. Stand behind the lawn mower to determine the handle height that best fits you.
5. Position the ends of the upper handle on the outside of the lower handle (Fig. 4).

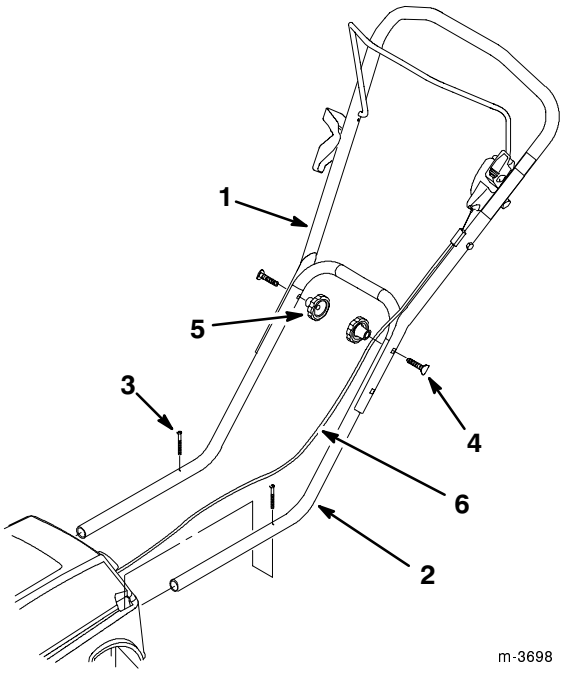

Figure 4

1. Upper handle
2. Lower handle
3. Screw (2)
4. Bolt (2)
5. Knob (2)
6. Control cable

6. Select one set of the upper handle holes and align it with the lower handle holes (Fig. 4).

7. Secure the handles in place with bolts and knobs (Fig. 4).

8. If the handles are in highest height position, use a clip to attach the cable to the left side of the lower handle tube (Fig. 5).

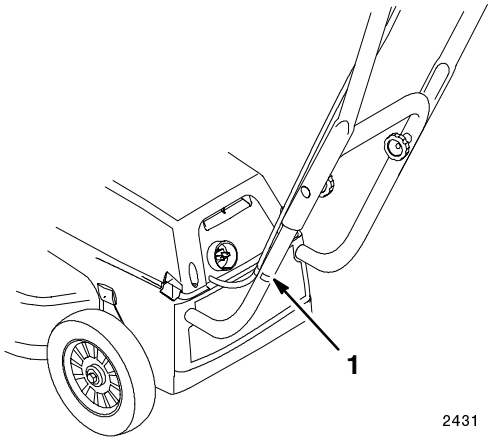

Figure 5

1. Clip

If the handles are in the lowest height position, use a clip to attach the cable to the right side of the lower handle tube (Fig. 6).

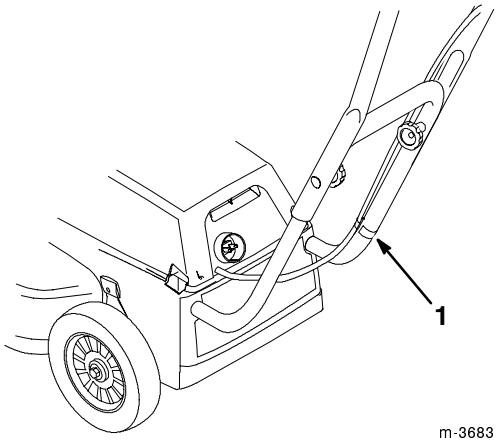

Figure 6

1. Clip

Installing the Side Discharge Chute

1. Use the handle on the mulch door to raise the door (Fig. 7).

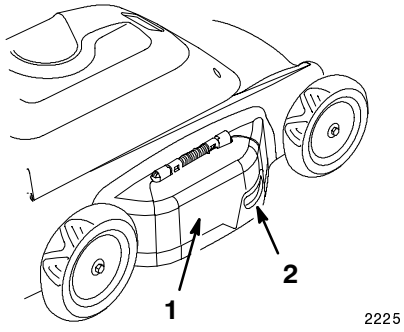

Figure 7

1. Mulch door 2. Handle

2. Hook the side discharge chute onto the pegs (Figs. 8 and 9).

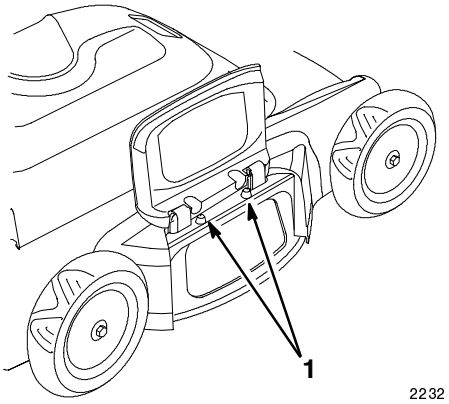

Figure 8

1. Peg (2)

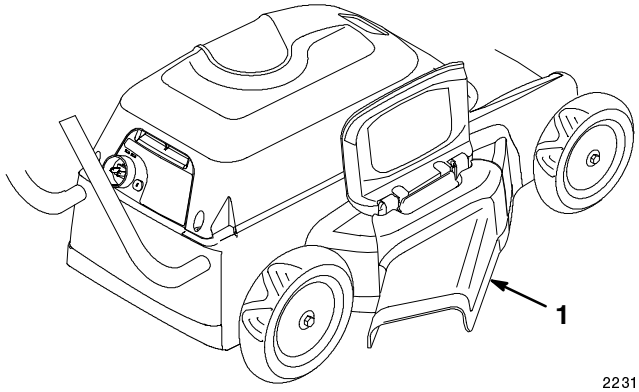

Figure 9

1. Side discharge chute

3. Lower the mulch door on top of the side discharge chute (Fig. 10).

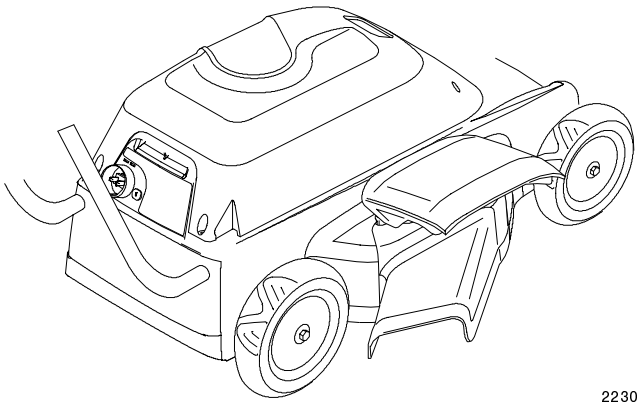

2230

Figure 10

Before Starting

Securing the Extension Cord

Use only a UL-listed (CSA-certified in Canada) extension cord recommended for outdoor use. Refer to the *Extension Cord Chart* that follows:

EXTENSION CORD CHART		
If length of the extension cord is less than or equal to:	100 ft.	150 ft.
Make sure that the wire size gauge (A.W.G.) in the cord is:	14	12

Note: Do not use an extension cord over 150 feet long.

WARNING

POTENTIAL HAZARD
- **Contact with water while operating the lawn mower could cause an electric shock.**

WHAT CAN HAPPEN
- **An electric shock can cause injury or death.**

HOW TO AVOID THE HAZARD
- **Don't handle the plug or the lawn mower with wet hands or while standing in water.**
- **Use only a UL-listed (CSA-certified in Canada) extension cord recommended for outdoor use. Refer to the *Extension Cord Chart* on page 8.**

To reduce the risk of electric shock, this lawn mower has a polarized plug (one blade is wider than the other) (Fig. 11) and requires a polarized extension cord.

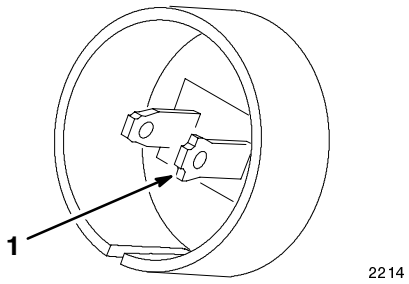

2214

Figure 11

1. Wide blade

1. Form a loop in the extension cord and secure it in the cord lock (Fig. 12).

2. Connect the extension cord to the lawn mower (Fig. 12).

Note: Do not unplug the extension cord by pulling on the cord. To unplug the cord, grasp the plug, not the cord.

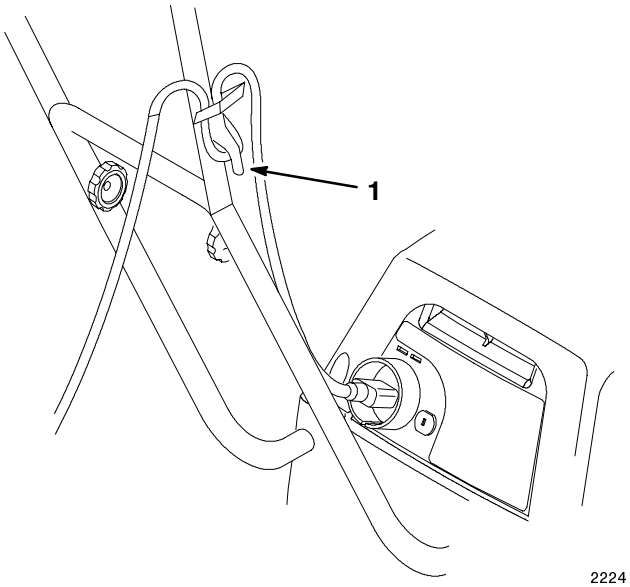

2224

Figure 12

1. Cord lock

WARNING

POTENTIAL HAZARD
- **The electrical cord could be damaged.**

WHAT CAN HAPPEN
- **A damaged electrical can could cause a shock or fire.**

HOW TO AVOID THE HAZARD
- **Thoroughly inspect the electrical cord before using the lawn mower. If cord is damaged, do not operate the lawn mower. Replace or repair a damaged cord immediately. Contact an Authorized Service Dealer for assistance.**

Planning Your Mowing Pattern

By following the suggested mowing pattern, you will reduce the risk of running over the extension cord with the lawn mower and prevent the cord from sustaining unnecessary wear. Do not allow the extension cord to wrap around trees, shrubs, or other obstacles.

1. Begin mowing near the electrical outlet and work outward (Fig. 13). Mow back and forth.

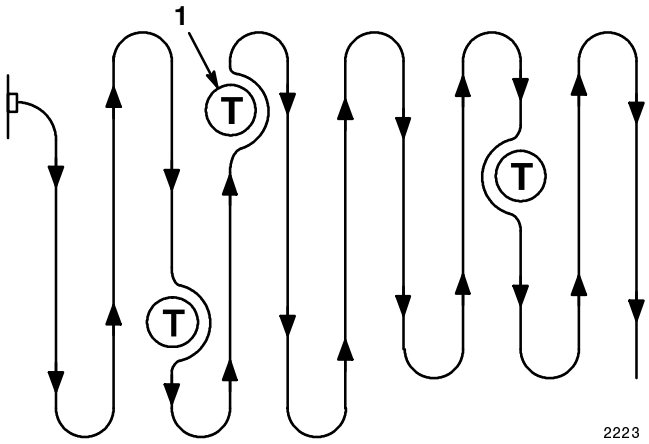

Figure 13

1. T = obstacles

2. When turning at the end of a cut path, be very careful not to mow across the extension cord.

IMPORTANT: If the extension cord is damaged, do not operate the lawn mower. Replace or repair a damaged extension cord immediately. Contact an Authorized Service Dealer for assistance.

Operation

Each time before you mow, make sure that the control bar operates properly. When you release the control bar, the motor and the blade should stop. If they do not, contact an Authorized Service Dealer.

Note: This lawn mower is intended for residential use only.

Starting the Lawn Mower

WARNING

POTENTIAL HAZARD
- **When the extension cord is connected to the lawn mower and plugged into a normal household outlet, the lawn mower is operational.**

WHAT CAN HAPPEN
- **Someone accidentally starting the lawn mower could seriously injure you or other bystanders.**

HOW TO AVOID THE HAZARD
- **Always remove the extension cord from the lawn mower receptacle when you leave the lawn mower unattended, even for a short period of time.**

1. Connect the extension cord to the lawn mower (Fig. 14).

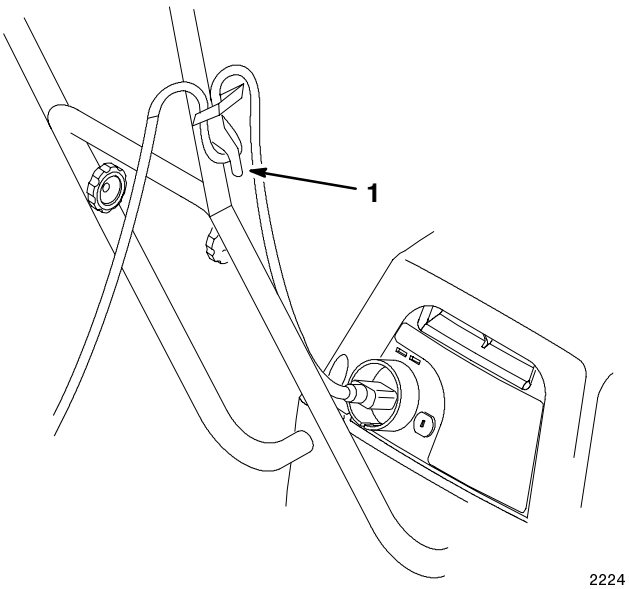

Figure 14

1. Cord lock

2. Plug the other end of the extension cord into a normal household outlet.

3. Pull the control bar toward the handle while pushing down the slide on the control (Fig. 15).

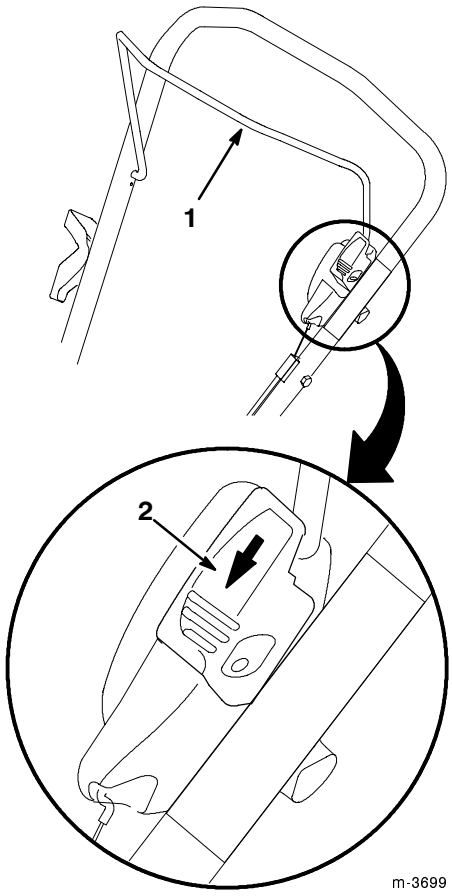

Figure 15

1. Control bar 2. Slide pushed down

4. Squeeze the control bar to the handle (Fig. 16).

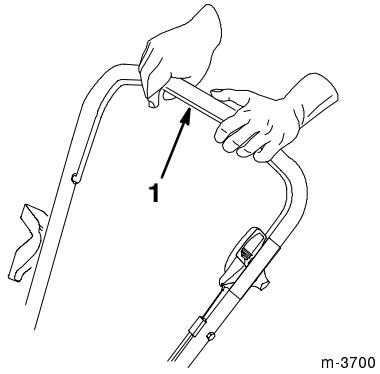

Figure 16

1. Control bar

Stopping the Lawn Mower

WARNING

POTENTIAL HAZARD
- **When the extension cord is connected to the lawn mower and plugged into a normal household outlet, the lawn mower is operational.**

WHAT CAN HAPPEN
- **Someone accidentally starting the lawn mower could seriously injure you or other bystanders.**

HOW TO AVOID THE HAZARD
- **Always remove the extension cord from the lawn mower receptacle when you leave the lawn mower unattended, even for a short period of time.**

1. Release the control bar.

2. Disconnect the extension cord from the lawn mower if you leave it unattended for any period of time.

Mowing Tips

General Mulching Tips

Toro designed your lawn mower to mulch grass when the mulch door is completely closed (Fig. 7). For the best cutting results and lawn appearance, follow these instructions whether cutting grass or leaves:

- Maintain a **sharp blade** throughout the cutting season. Periodically file down any nicks on the blade.
- **Only mow dry grass or leaves.** Wet grass and leaves tend to clump on the yard and may cause the lawn mower to plug up or the motor to stall.

WARNING

POTENTIAL HAZARD
- **Wet grass or leaves can cause you to slip and contact blade.**

WHAT CAN HAPPEN
- **Blade contact can seriously injure you.**

HOW TO AVOID THE HAZARD
- **Mow only in dry conditions.**

- Clean the clippings or leaves from the underside of the lawn mower deck after each mowing. Use a wooden tool, not a metal one.
- Grass grows at different rates at different times of the year. In the heat of summer, it is generally best to cut grass at the 2-1/2-inch (6.4 cm), 3-inch (7.6 cm), or

3-1/2-inch (8.9 cm) cutting height settings. Cut only about a third of the grass blade. Do not cut below the 2-1/2-inch (6.4 cm) setting unless grass is sparse, or it is late fall when grass growth begins to slow down.

- When changing cutting height from an established setting to a lower cutting height, the grass may appear ragged or uneven until the grass adjusts to the new established cutting height and regains its normal appearance.
- When cutting grass over six inches (15 cm) tall, you may want to first mow using the side discharge chute, or try the highest cutting height setting and a slower walking speed; then mow again at a lower setting for the best lawn appearance. If the grass is too long, leaving clumps on top of lawn, the lawn mower may plug and cause the motor to stall.
- Alternate the mowing direction. This helps disperse the clippings over the lawn for even fertilization.

If the finished cut lawn appearance is unsatisfactory, try one or more of the following:

- Sharpen the blade.
- Walk at a slower pace while mowing.
- Raise the cutting height on your lawn mower.
- Cut the grass more frequently.
- Overlap cutting swaths instead of cutting a full swath with each pass.
- Set cutting height on the front wheels one notch higher than that of the rear wheels. For example, set the front wheels at the 3-inch (7.6 cm) setting and the rear wheels at the 2-1/2-inch (6.4 cm) setting.

Cutting Leaves

- When cutting is complete, always be sure that half of the lawn shows through the cut leaf cover. This may require one or more passes over the leaves.
- For light leaf coverage, position all the wheels at the same cutting height setting.
- Walk at a slower mowing speed if the leaves are not cut up finely enough to be hidden down in the grass.
- If you cut up a lot of oak leaves, add lime to your grass in the spring. Lime reduces the acidity of the oak leaves.

Adjusting the Cutting Height

The lawn mower has five cutting height settings: 1-1/2 inches (3.8 cm), 2 inches (5.1 cm), 2-1/2 inches (6.4 cm), 3 inches (7.6 cm), and 3 1/2-inches (8.9 cm).

The rear adjustment lever adjusts the cutting height for both rear wheels, and the front adjustment lever adjusts both front wheels.

WARNING

POTENTIAL HAZARD
- **Adjusting the height-of-cut levers could bring your hands into contact with a moving blade.**

WHAT CAN HAPPEN
- **Contact with blade could cause serious personal injury.**

HOW TO AVOID THE HAZARD
- **Stop the motor, wait for all moving parts to stop, and disconnect the extension cord from the lawn mower before changing the cutting height.**
- **Do not put your fingers under the housing to lift the lawn mower when adjusting the height-of-cut levers.**

1. Stop the motor and wait for all moving parts to stop.
2. Disconnect the extension cord from the lawn mower.
3. For easier adjustment, lift the housing up so that the wheels are off ground. **Do not place your hands under deck to lift the housing.**
4. Squeeze the adjustment lever toward the wheel and move the lever to the desired setting (Fig. 17). Ensure that the pin on the adjustment lever engages the notch in the lawn mower housing.

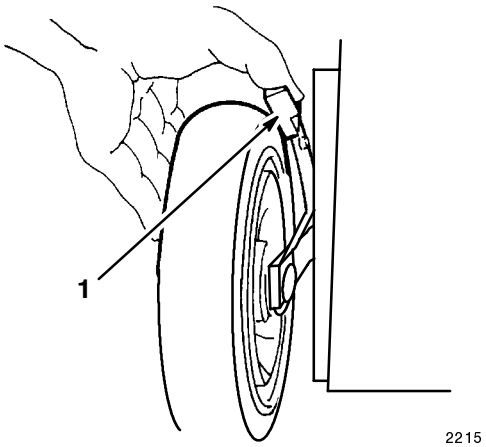

Figure 17

1. Height-of-cut adjustment lever

5. Adjust the wheels to the same setting.

Note: For easier adjustment of the rear wheels, grasp the lower handle with one hand and lift up the lawn mower slightly so that the wheel is off the ground. Then squeeze the adjustment handle toward the wheel.

Maintenance

Recommended Maintenance Schedule

Service Item	Service Operation	Each Use	50 Hours or Yearly
Housing	Clean built-up grass clippings and dirt.	X	
Blade	Sharpen or replace the blade; maintain it more frequently if the edge dulls quickly in rough or sandy conditions.		X
	Check stopping time of the blade every 50 operating hours or at the start of each mowing season. The blade must stop within three seconds of releasing the control bail; if not, contact your Authorized Service Dealer for repair.		X

WARNING

POTENTIAL HAZARD
- **When the extension cord is connected to the lawn mower and plugged into a normal household outlet, the lawn mower is operational.**

WHAT CAN HAPPEN
- **Someone could accidentally start the lawn mower.**

HOW TO AVOID THE HAZARD
- **Always disconnect the extension cord from the lawn mower when you leave the lawn mower unattended, even for a short period of time.**

Cleaning the Lawn Mower Housing

Before cleaning the lawn mower, stop the motor, wait for all moving parts to stop, and disconnect the extension cord from the lawn mower.

IMPORTANT: Do not spray or pour water on the lawn mower when cleaning. Moisture can get trapped in the lawn mower and cause corrosion of internal parts.

After Every Use

- Clean the underside of the lawn mower housing. Be particularly careful to keep the front cavity clear of all debris (Fig. 18). Remove dirt and grass clippings with a hardwood scraper. Avoid burrs and sharp edges.

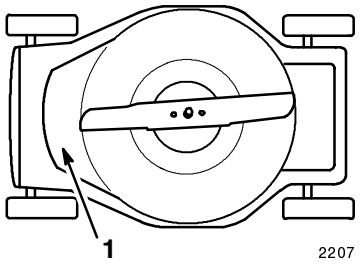

Figure 18

1. Front cavity

- Brush all debris off the top of the lawn mower housing after every use.
- Inspect the plug receptacle for signs of melting or heating. Old, worn-out extension cord plugs that fit loosely in the plug receptacle can cause overheating from poor contact. Replace any damaged extension cords immediately.

After Each Season

- Remove the top shroud (Fig. 19) and clean out any debris from underneath it with compressed air, a vacuum cleaner, or a brush.

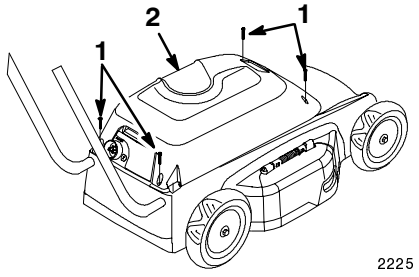

Figure 19

1. Screw (4)
2. Shroud

- Check for any discolored or charred wires and switch contacts. If any are damaged, contact your Authorized Service Dealer for repair.
- Inspect the drive belt and replace it if it is worn or cracked.

Maintaining the Blade

Always mow with a sharp blade. A sharp blade cuts cleanly and without tearing or shredding the grass blades like a dull blade.

WARNING

POTENTIAL HAZARD
- **When the extension cord is connected to the lawn mower and plugged into a normal household outlet, the lawn mower is operational.**

WHAT CAN HAPPEN
- **Someone could accidentally start the lawn mower.**

HOW TO AVOID THE HAZARD
- **Do not attempt to inspect, remove, or replace the blade without first disconnecting the extension cord from the lawn mower.**

1. Stop the motor and wait for all moving parts to stop.
2. Disconnect the extension cord from the lawn mower.
3. Tip the lawn mower on its side (Fig. 18).

Inspecting the Blade

Carefully examine the blade for sharpness and wear, especially where the flat and the curved parts meet (Fig. 20A). Since sand and abrasive material can wear away the metal that connects the flat and curved parts of the blade, check the blade before using the the lawn mower. If you notice a slot or wear (Fig. 20B and 20C), replace the blade.

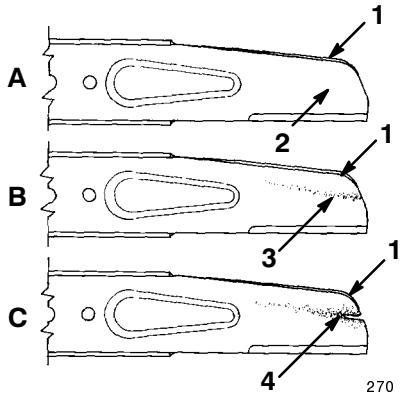

Figure 20

1. Sail
2. Flat part of blade
3. Wear
4. Slot formed

Note: For the best performance, install a new blade before the cutting season begins. During the year, file down small nicks to maintain the cutting edge.

WARNING

POTENTIAL HAZARD
- **A worn or damaged blade could break and a piece of blade could be thrown in operator's or bystander's direction.**

WHAT CAN HAPPEN
- **A thrown piece of blade could cause serious personal injury or death to operator or bystanders.**

HOW TO AVOID THE HAZARD
- **Inspect the blade periodically for wear or damage.**
- **Replace a worn or damaged blade.**

Removing the Blade

Grasp the end of the blade using a rag or a thickly padded glove. Remove the blade bolt, the washer, and the blade (Fig. 21).

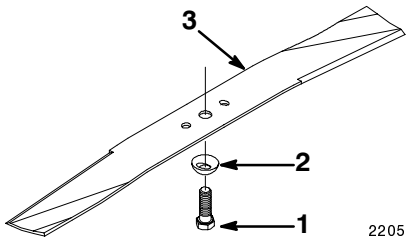

Figure 21

1. Blade bolt
2. Washer
3. Blade

Sharpening and Balancing the Blade

File the top side of the blade to maintain its original cutting angle (Fig. 22A) and inner cutting edge radius (Fig. 22B).

Note: The blade will remain balanced if you remove the same amount of material from both cutting edges.

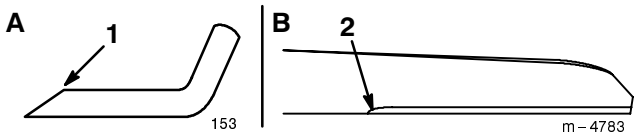

Figure 22

1. Sharpen at this angle only
2. Maintain the original radius here

IMPORTANT: Check the balance of blade by putting it on a blade balancer. You can purchase an inexpensive balancer at a hardware store. A balanced blade stays in a horizontal position and an unbalanced blade settles to the heavy side. If blade is not balanced, file more metal off the cutting edge on the heavy end of the blade.

Installing the Blade

1. Install a sharp, balanced blade, a washer, and a blade bolt.

Note: The sail part of blade must point toward the top of the lawn mower housing to ensure a correct installation. The washer is curved and must be installed with the curve side down as shown in Figure 21.

2. Tighten the blade bolt to 45 to 50 ft-lb (61 to 68 N·m).

Servicing a Double-insulated Lawn Mower

In a double-insulated lawn mower, there are two systems of insulation provided instead of grounding. No grounding means is provided on a double-insulated lawn mower, nor should a means for grounding be added to the lawn mower. Servicing a double-insulated lawn mower requires extreme care and knowledge of the system, and should be done only by a qualified service person. Replacement parts for a double-insulated lawn mower must be identical to the parts they replace. A double-insulated lawn mower is marked with the words “DOUBLE INSULATION” or “DOUBLE INSULATED.” The symbol (square within a square) ⧈ may also be marked on the lawn mower.

Servicing the On/Off and Blade Brake Systems

The motor and blade are designed to stop within three seconds after releasing the control bail. Ensure that the control bail functions properly before each use of the lawn mower. If the blade does not stop within three seconds, or if there is a grinding or scraping metal-to-metal noise when the control bail is released, contact an Authorized Service Dealer for proper On/Off and blade brake adjustment or replacement.

Troubleshooting

Toro designed and built your lawn mower for trouble-free operation. Check the following components and items carefully. If a problem continues, see your Authorized Service Dealer.

PROBLEM	CORRECTIVE ACTION
Motor will not start	1. Connect the extension cord to the lawn mower and plug the other end of the extension cord into a normal household outlet. 2. Check the extension cord, and repair or replace the cord if it is damaged. 3. Check the outlet fuse or the circuit breaker.
Motor starts hard or loses power	1. Clean the lawn mower discharge chute. 2. Clean the underside of the lawn mower deck. 3. Move the lawn mower to the pavement; do not start in the grass.
Lawn mower or motor vibrates excessively	1. Balance the blade. 2. Tighten the blade mounting bolt. 3. Clean the lawn mower discharge chute. 4. Clean the underside of the lawn mower deck. 5. Tighten the motor mounting bolts.
Uneven cutting pattern	1. Place all four wheels at the same height. 2. Sharpen and balance the blade. 3. Change the mowing pattern. 4. Clean the underside of the lawn mower deck.
Discharge chute plugs	1. Raise the cutting height. 2. Allow the grass to dry before mowing. 3. Clean the underside of lawn mower deck.

Storage

Store the lawn mower in a cool, clean, dry place. Cover the lawn mower to keep it clean and protected.

1. Clean the lawn mower housing. Refer to *Cleaning the Lawn Mower Housing* on page 12.
2. Remove grass clippings, dirt, and grime from external parts of the shrouding and the top of the lawn mower housing.
3. Check the condition of the blade. Refer to *Maintaining the Blade* on page 13.
4. Tighten all nuts, bolts, and screws.

The Toro Promise

A Two-Year Full Warranty for Residential Use
for the United States, Canada, and Mexico

General Conditions

The Toro Company and its affiliate, Toro Warranty Company, pursuant to an agreement between them, jointly warrant this product for two years against defects in material or workmanship when used for normal residential purposes. To receive a replacement or repair, at our option, return the complete unit, postage prepaid, to the seller. **Only** United States customers may return their product, with proof of purchase, to any Authorized Service Dealer, Master Service Dealer, or the Toro Service Center, 5300 Shoreline Boulevard, Mound, MN 55364.

This warranty covers product defects only. **Neither The Toro Company nor Toro Warranty Company is liable for indirect, incidental or consequential damages in connection with the use of the Toro Products covered by this warranty, including any cost or expense of providing substitute equipment or service during reasonable periods of malfunction or non-use pending completion of repairs under this warranty. Some states do not allow exclusions of incidental or consequential damages, so the above exclusion may not apply to you.** This warranty gives you specific legal rights, and you may also have other rights which vary from state to state.

If all other remedies fail, you may contact at: Customer Service Department, Toro Warranty Company, 8111 Lyndale Avenue South, Bloomington, MN 55420-1196. **Do not** return defective product to this address.

Countries Other than the United States, Canada, or Mexico

Customers who have purchased Toro products exported from the United States, Canada, or Mexico should contact their Toro Distributor (Dealer) to obtain guarantee policies for your country, province, or state. If for any reason you are dissatisfied with your Distributor's service or have difficulty obtaining guarantee information, contact the Toro importer. If all other remedies fail, you may contact us at Toro Warranty Company.

Rev. 02/02/2000