Form No. 3324–182

120 Volt Corded (E–120)

Recycler® Electric Mower

Model No. 20050—200000001 and Up

Parts Catalog

Ordering Replacement Parts

To order replacement parts, please supply: the part number, the quantity, and the description of each part desired.

Understanding Reference Numbers

Each identified part in an illustration has a reference number. The reference number for a part also appears in the parts list, along with other information about the part.

This catalog uses two special reference number formats, one to indicate parts in a service assembly and another to indicate the quantity of a given part in an illustration.

Service Assembly Reference Numbers

Parts in service assemblies have reference numbers in the form **a:b.** The **a** represents the reference number of the entire service assembly and the **b** represents a sequential number unique to each part within the service assembly.

For example, a wheel assembly might be identified by reference number **6**, the tire by **6:1**, the valve by **6:2**, and the wheel by **6:3**. When you order the assembly identified by reference number 6, you receive all parts identified by reference numbers 6:1, 6:2, and 6:3. However, you may also order any part individually.

Reference numbers of this type appear in illustrations and in part lists.

Reference Numbers Indicating Quantity

In an illustration, if a reference number indicates more than one part, the reference number has the form **nX y.** The **n** represents the quantity of the part, the **X** is the multiplication symbol, and the **y** represents the reference number.

For example, in an illustration, the reference number **2X 37** means that two of the parts identified by reference number 37 are indicated.

© The TORO Company — 2000
All Rights Reserved

Contents

Description	Page
Deck, Liner and Wheel Assembly	3
Motor and Blade Assembly	4
Cover, Mulch Plug and Panel Assembly	5
Handle and Controls Assembly	6
Electrical Wiring, Schematic and Discharge Chute Assembly	7

Accessories

Description	Model / Part No.
Grass Bagging Kit	59294

Part Description Abbreviations

Part descriptions in this catalog may include the following abbreviations.

Abbreviation	Meaning
AR	as required
ASM	assembly
CARR	carriage
DEG	degrees
FH	flat head
GA	gauge
HF	hex flange
HH	hex head
HHF	hex head flange
HLH	hex lag head
HJ	hex jam
HOC	height-of-cut
HS	hex socket
HSBH	hex socket button head
HSFH	hex socket flat head
HSH	hex socket head
HWH	hex washer head
HWHTF	hex washer head thread forming
INC	incorporated
LH	left hand
NI	nylon insert
PPH	Phillips pan head
PTH	Phillips truss head
PTO	power take off
RH	right hand
SFH	slotted fillister head
SHH	slotted hex head
SQH	square head
SHWH	slotted hex washer head
SPH	slotted pan head
SRH	slotted round head
STD	standard
TAP	self tapping
TTH	Torx truss head
WH	wing head

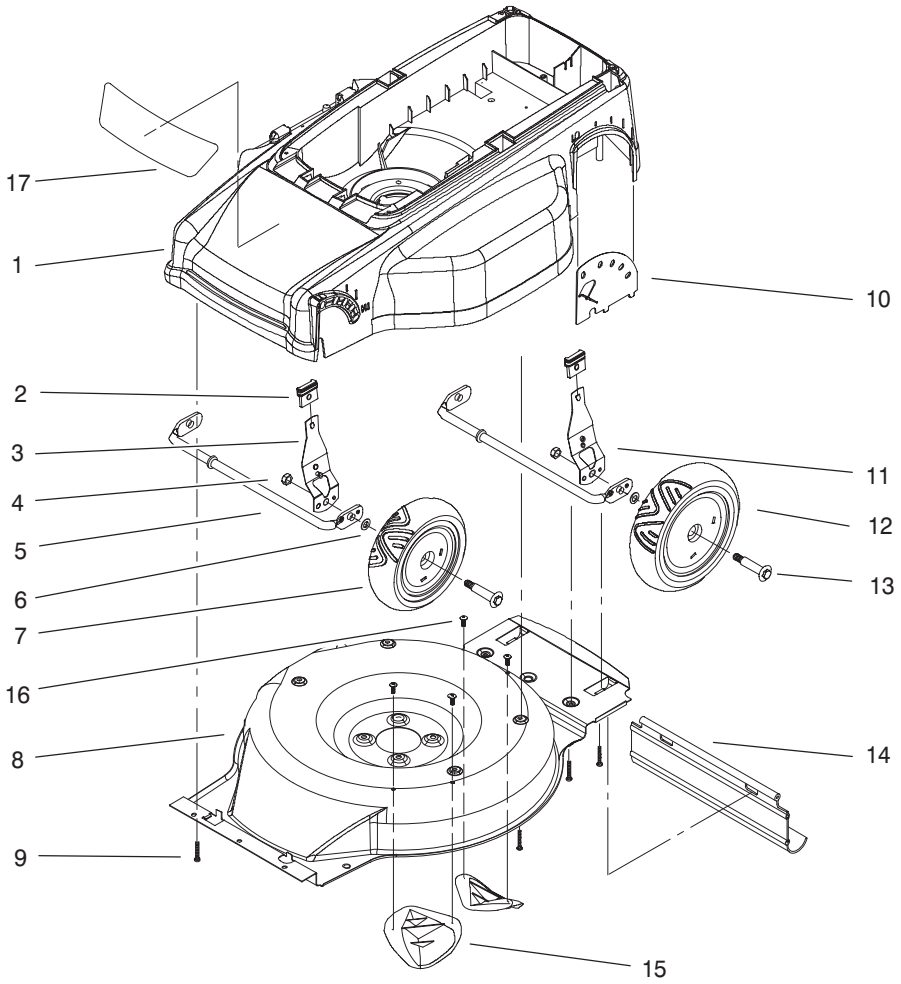

Sheet No.:2

Deck, Liner and Wheel Assembly

Ref. No.	Part No.	Qty.	Description
1	94–3895	1	Deck ASM
2	92–1008	2	Knob–Lever, Height Adjustment
3	94–3870	1	Lever ASM–HOC, Front
4	603773	4	Nut
5	93–3952	2	Axle
6	40–1940	4	Washer
7	92–9586	2	Wheel ASM
8	95–5167	1	Liner ASM
9	93–3985	11	Screw – PPH
10	95–5037	1	Plate – HOC
11	94–3871	1	Lever ASM–HOC, Rear
12	93–0344	2	Wheel ASM
13	92–1057	4	Bolt–Shoulder
14	94–7417	1	Shield–Trailing
15	76–2160	2	Plate–Kicker
16	94–6961	4	Screw
17	99–6727	1	Decal–Deck

Ref. No.	Part No.	Qty.	Description

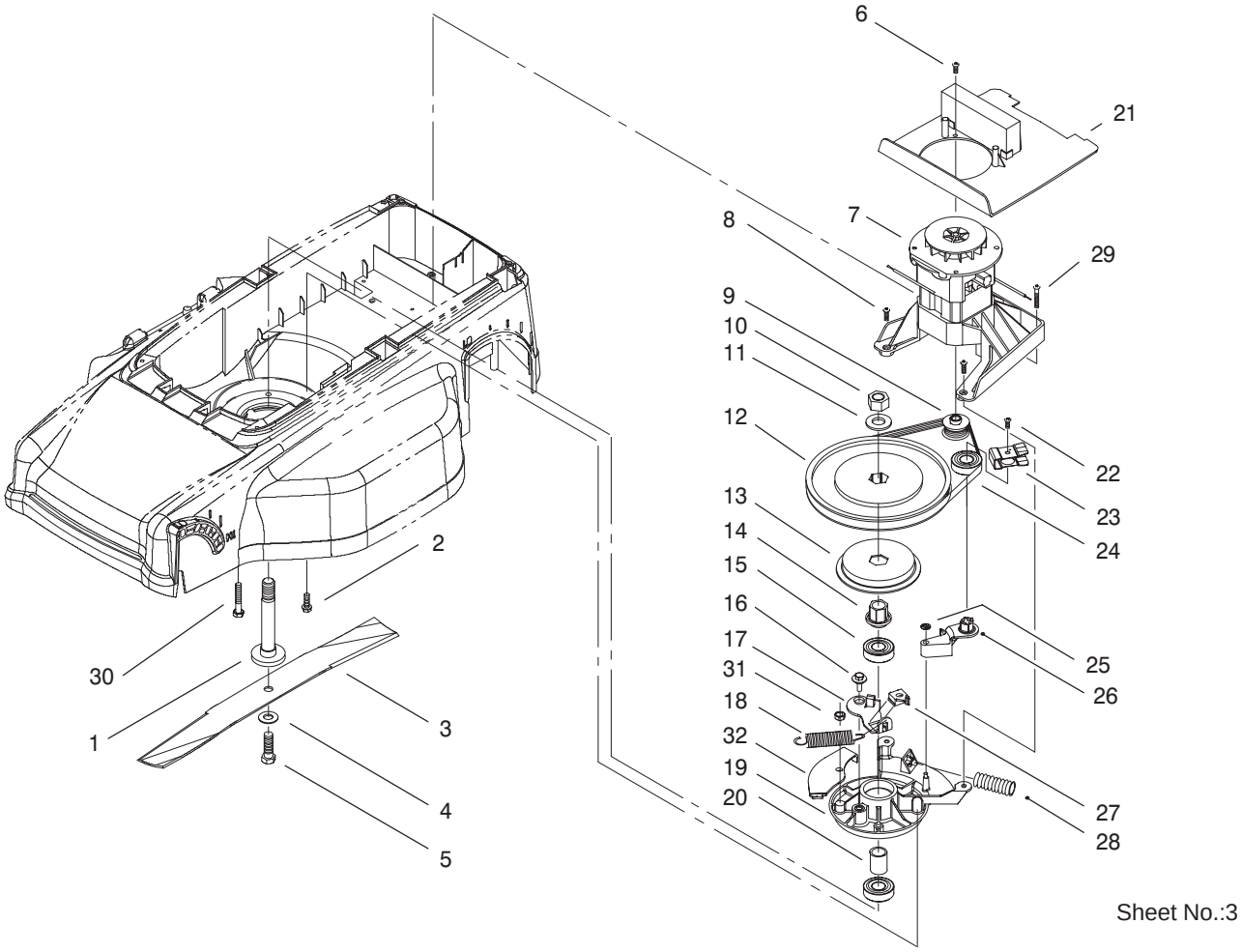

Sheet No.:3

Motor and Blade Assembly

Ref. No.	Part No.	Qty.	Description
1	93–3329	1	Shaft – Spindle
2	32144–44	3	Screw
3	93–3954	1	Blade
4	3290–465	1	Washer–Belleville
5	26–0671	1	Screw–Blade
6	94–4496	4	Screw–PPH
7	94–6917	1	Motor ASM
8	32144–8	2	Screw–HH
9	93–3331	1	Pulley – Motor
10	3219–6	1	Nut–Hex
11	3256–27	1	Washer–Flat
12	93–3321	1	Pulley – Driven
13	93–3328	1	Drum – Brake
14	93–3330	1	Hub – Pulley
15	61–8780	3	Ball Bearing
16	92–9698	1	Screw–Shoulder
17	93–3991	1	Lever ASM–Brake
18	93–3995	1	Spring – Brake Switch
19	93–3325	1	Spindle
20	93–3980	1	Spacer – Bearing
21	94–3873	1	Baffle ASM
22	94–6961	1	Screw
23	94–3866	1	Guide – Belt
24	93–3989	1	Belt – Poly V
25	93–3988	1	Pushnut–Tinnerman
26	93–3323	1	Idler Arm

Ref. No.	Part No.	Qty.	Description
27	93–3322	1	Mount – Cable
28	61–8880	1	Spring
29	93–3985	2	Screw – PPH
30	32144–110	1	Screw–HWH
31	3296–56	1	Nut–Lock, NI
32	94–9155	1	Bracket – Spring

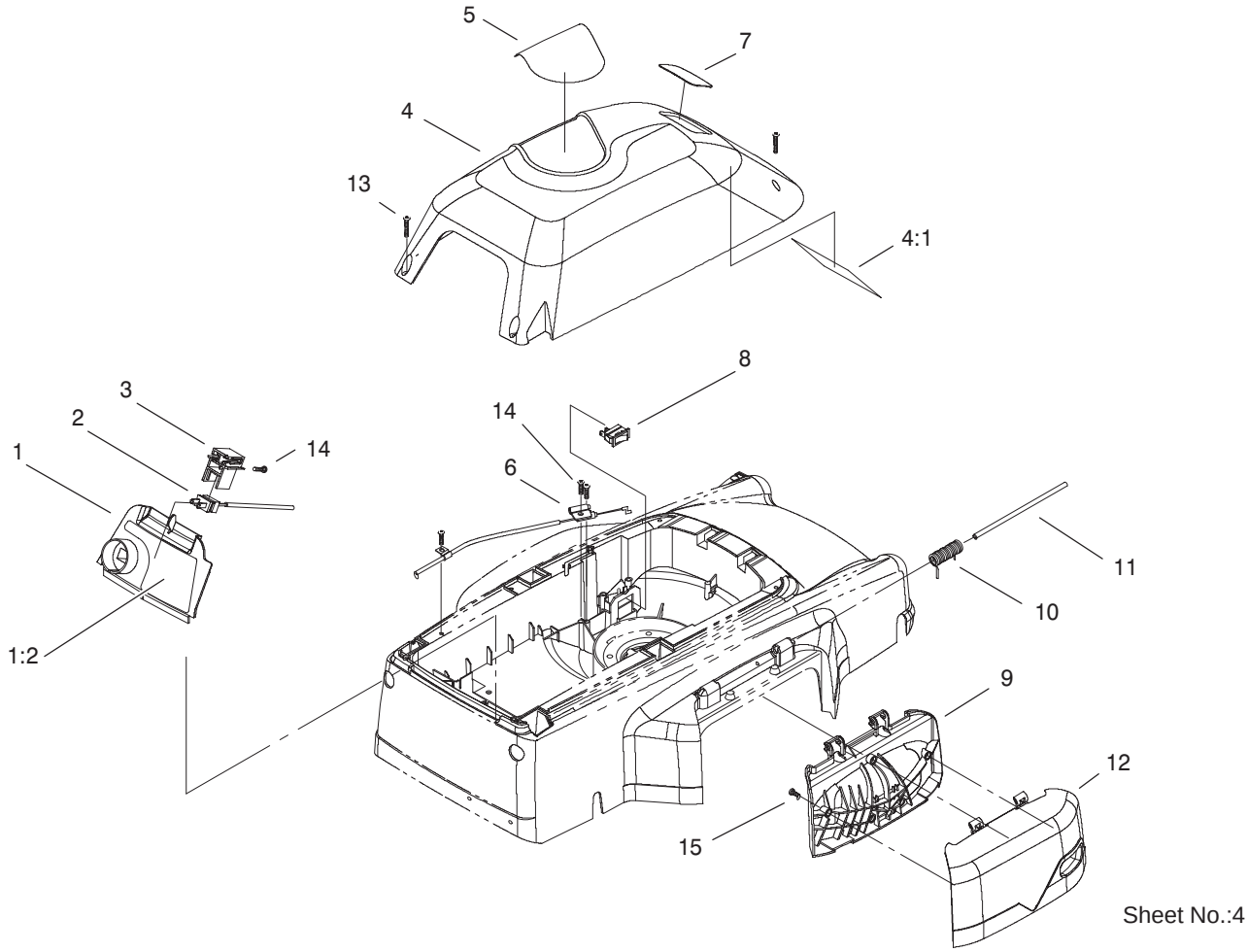

Sheet No.:4

Cover, Mulch Plug and Panel Assembly

Ref. No.	Part No.	Qty.	Description
1	94–3880	1	Panel ASM
1:2	94–3853	1	Decal – Control Panel
2	93–3979	1	Plug
3	93–3344	1	Housing – Plug
4	94–3898	1	Cover ASM
4:1	94–3860	1	Decal – Wiring
5	98–1490	1	Decal
6	93–3975	1	Bracket – Cable
7	92–2289	1	Plate–Logo
8	94–3886	1	Switch
9	93–3956	1	Mulch Plug – Inside
10	94–3865	1	Spring – Torsion
11	93–3990	1	Pin – Hinge, Mulch Plug
12	93–3957	1	Mulch Plug – Outside
13	93–3986	4	Screw – PPH
14	94–4496	4	Screw–PPH
15	94–6961	5	Screw

Ref. No.	Part No.	Qty.	Description

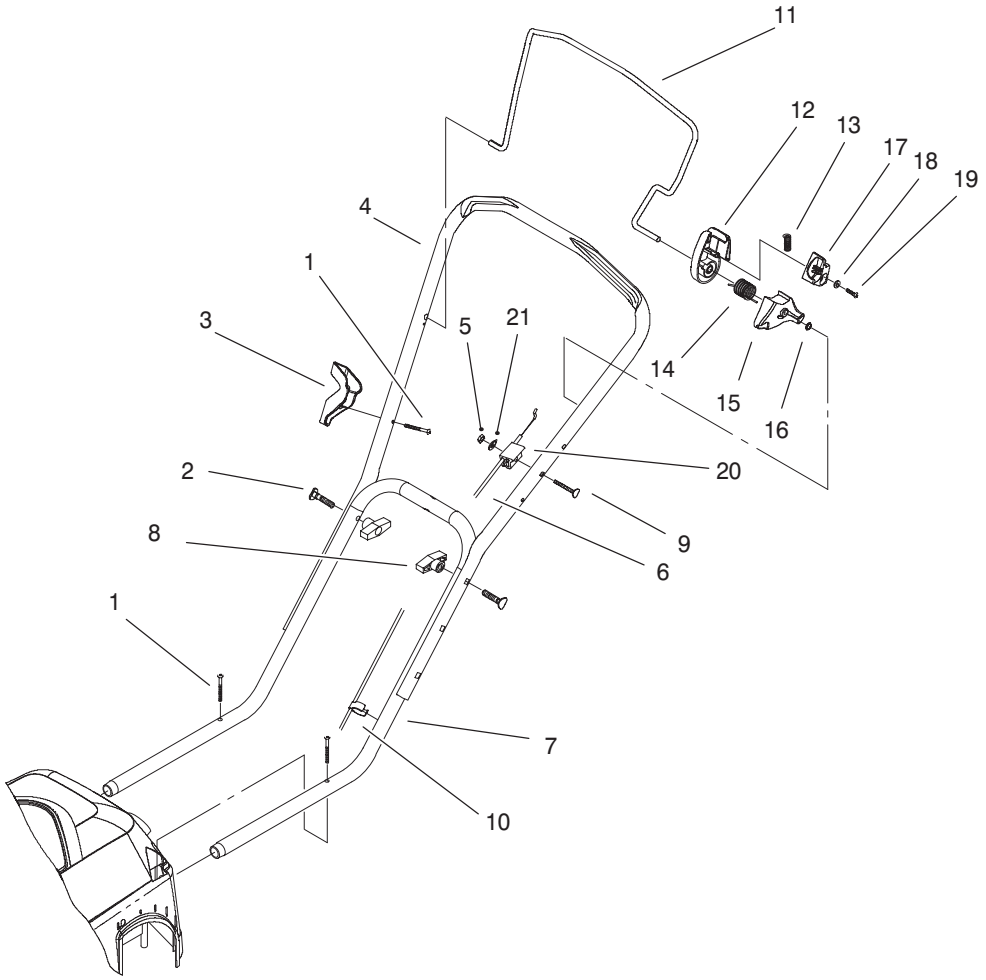

Sheet No.:5

Handle and Controls Assembly

Ref. No.	Part No.	Qty.	Description
1	93–3986	3	Screw – PPH
2	92–2260	2	Screw–Handle
3	93–3996	1	Lock – Cord
4	100–5044–05	1	Handle–Upper
5	3296–8	1	Nut–Lock NI
6	93–3978	1	Cable – Control
7	93–3972–05	1	Handle – Lower
8	98–7134	2	Knob–Handle
9	92–2269	1	Screw–Handle
10	94–7409	1	Clip – Cable
11	95–3000–03	1	Bail
12	93–3969	1	Housing – Bail
13	94–3851	1	Spring – Compression
14	94–1154	1	Spring – Bail
15	93–3967	1	Cam
16	94–1191	1	Nut – Push
17	93–3968	1	Slide
18	94–3868	1	Washer – Flat
19	94–4496	1	Screw–PPH
20	94–7407	1	Support – Cable
21	3256–2	1	Washer–Flat

Ref. No.	Part No.	Qty.	Description

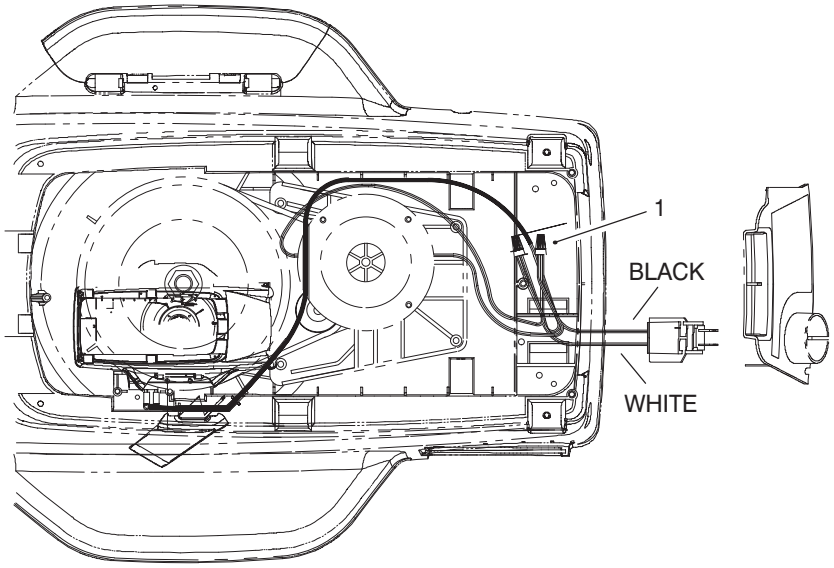

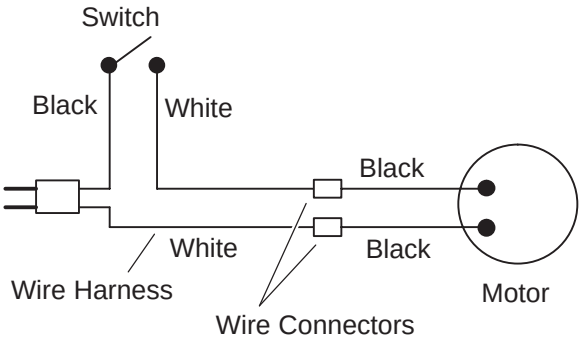

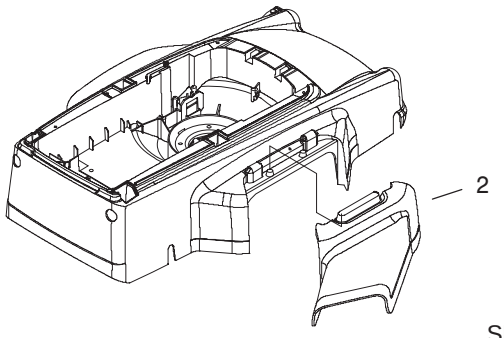

Sheet No.:6

c–2965

Electrical Wiring, Schematic and Discharge Chute Assembly

Ref. No.	Part No.	Qty.	Description
1	73–6570	2	Connector–Wire Nut
2	93–3963	1	Chute – Side

Ref. No.	Part No.	Qty.	Description


TORO®