Form No. 3324-183

TORO®

Carefree® Cordless

Walk Power Lawn Mower

Model No. 21040–200000001 and Up

Operator's Manual

CE

International English (GB)

Contents

	Page
Introduction	2
Safety	3
Safe Operating Practices	3
General Operation	3
While Operating	3
Maintenance And Storage	4
Sound Pressure Level	5
Sound Power Level	5
Vibration Level	5
Symbol Glossary	5
Assembly	7
Installing the Handle	7
Installing the Side Discharge Chute	8
Installing the Rain Shield	9
Before Starting	10
Charging the Battery	10
Checking the Battery Power Status	12
Operation	12
Using the Key	12
Starting the Lawn Mower	13
Stopping the Lawn Mower	14
Resetting the Circuit Breaker	14
Mowing Tips	14
Adjusting the Cutting Height	15
Maintenance	16
Recommended Maintenance Schedule	16
Cleaning the Lawn Mower Housing	16
Maintaining the Blade	17
Replacing the Battery	19
Servicing a Double-insulated Lawn Mower	19
Troubleshooting	20
Storage	20

Introduction

Thank you for choosing a Toro product. We want you to be completely satisfied with your new purchase.

Read this manual carefully to learn how to operate and maintain your product properly. The information in this manual can help you and others avoid injury and product damage. Although Toro designs and produces safe products, you are responsible for operating the product properly and safely.

Whenever you contact your Authorized Service Dealer or the factory for help with service, genuine Toro parts, or additional information, have the model number and the serial number of your product handy. You will find the model number and serial number decal on the product as illustrated in Figure 1.

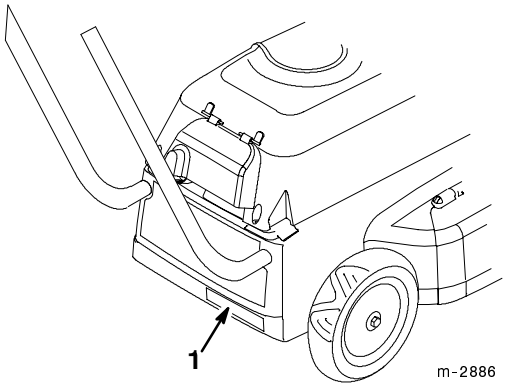

Figure 1

1. Model number and serial number decal

Write the product model number and serial number in the space below:

Model No. _____

Serial No. _____

This manual identifies potential hazards and has special safety messages that help you and others avoid personal injury and even death. DANGER, WARNING, and CAUTION are words used to identify the level of hazard.

DANGER signals an extreme hazard that will cause serious injury or death if you do not follow the recommended precautions.

WARNING signals a hazard that may cause serious injury or death if you do not follow the recommended precautions.

©2000 **The Toro Company**
All Rights Reserved

Printed in USA

CAUTION signals a hazard that may cause minor or moderate injury if you do not follow the recommended precautions.

This manual uses two other words to highlight information. **Important** calls attention to special mechanical information and **Note** emphasizes general information worthy of special attention.

Safety

IMPORTANT SAFETY INSTRUCTIONS

Improper use or maintenance by the operator or owner can result in injury. To reduce the potential for injury, comply with these safety instructions and always pay attention to the safety alert ⚠ symbol which means CAUTION, WARNING or DANGER—"personal safety instruction." Failure to comply with the instruction may result in personal injury.

READ ALL INSTRUCTIONS BEFORE USING THIS MOWER

SAVE THESE INSTRUCTIONS FOR FUTURE REFERENCE!

⚠ WARNING ⚠

To reduce the risk of personal injury while using the battery lawn mower, always follow these basic safety instructions.

Safe Operating Practices

This product is capable of amputating hands and feet and throwing objects. Always follow all safety instructions to avoid serious injury or death.

This lawn mower is designed for cutting and mulching grass. Any use for purposes other than these could prove dangerous to the user or bystanders.

General Operation

- Read this manual carefully before operating the lawn mower. Become familiar with the controls and proper use of the lawn mower. Never allow children under 16 years of age to operate the lawn mower. Never allow adults to operate lawn mower without proper instructions.
- The operator of the lawn mower is responsible for keeping everyone, especially children and pets, away from area of operation. The operator is responsible for accidents or hazards occurring to other people or their property.
- Thoroughly inspect area where lawn mower will be used and remove sticks, stones, wire, and debris that could be picked up and thrown by lawn mower. Watch for foreign objects while mowing.
- Wear long pants and substantial non-skid rubber soled shoes. Do not operate lawn mower while wearing open-toed shoes, jewelry, loose clothing, or when barefoot. Use of rubber gloves and footwear is recommended when working outdoors.
- Keep all guards, shields, safety devices, side discharge chute, or optional grass catcher in place. Repair or replace damaged parts, including decals. Check all safety devices before each use.
- Motor and blade are designed to stop when control bail is released. Ensure control bail functions properly before each use of lawn mower.
- Before using, always visually inspect to see that the blades, blade fasteners, and cutter assembly are not worn or damaged. Replace worn or damaged blades and fasteners in sets to preserve balance.
- Only use those accessories and attachments designed to be used with this product. Use of any accessory or attachment not designed for this product may increase the risk of injury.

While Operating

- Do not insert key into plug receptacle until you are ready to mow.
- Do not operate lawn mower in gaseous, explosive atmospheres. Normal sparking of motor could ignite fumes.
- Start the motor carefully according to instructions and with feet well away from the blade.
- Use Right Appliance - Do not use lawn mower for any job except that for which it is intended.
- Stay Alert - Watch what you are doing. Do not operate lawn mower when tired or under the influence of drugs, alcohol or medication.
- Avoid dangerous environments. Never operate lawn mower in wet grass or damp locations. Do not use lawn mower in the rain.

- Always maintain secure footing. Keep a firm grip on the handle and walk; never run. Mow only in daylight or in good artificial light.
- Mow across the face of slopes; never up and down. Use extreme caution when changing direction on slopes. Do not mow excessively steep slopes. Wear skid resistant shoes on slopes.
- Do not Overreach—Keep proper footing and balance at all times.
- Do not force the lawn mower. It operates best and safest at the rate for which it was designed.
- Always wear safety glasses or eye shields during operation to protect eyes from foreign objects that may be thrown from the machine. (Regular eyeglasses are **not** safety glasses.)
- Always wear an approved dust mask when using unit in dusty conditions.
- Keep face, hands, and feet away from the lawn mower housing and cutter blade when the motor is running. Blade can cause injury to hands and feet. Stay behind the handle until the motor stops.
- Use extreme caution when reversing or pulling the lawn mower toward you.
- Since the blade rotates for a few seconds after the control bar is released, stay behind the handle until all moving parts stop.
- After striking a foreign object or if lawn mower vibrates abnormally, stop motor and remove key from plug. Check lawn mower for damage and make all repairs before using lawn mower again. If major repairs are ever needed or if assistance is desired, contact your local Authorized Toro Service Dealer.
- Do not operate lawn mower if it has been dropped or damaged in any way. Repair any damage before operating lawn mower.
- Stop the motor, wait for all moving parts to stop, and remove the key from plug before adjusting the height-of-cut.
- Stop the motor when pushing the lawn mower outside the lawn area.
- Stop the motor and remove the key from plug before removing side discharge chute or optional grass catcher.
- Stop motor before leaving the operator's position—behind the handle. Remove key from plug receptacle if lawn mower will be unattended.
- If lawn mower must be lifted to be transported, stop motor, stay behind the handle until all moving parts stop and remove the key from the plug receptacle.

Maintenance And Storage

- Perform only those maintenance instructions described in this manual. If major repairs are ever needed or if assistance is desired, contact your local Authorized Toro Service Dealer.
- Before lawn mower is cleaned, inspected, serviced, or adjusted, stop motor and wait for all moving parts to stop. Remove key from plug.
- Do not charge lawn mower in rain or in wet locations.
- To prevent electric shock while charging, repair or replace any damaged electrical cords immediately.

Note: The extension cord is only needed to recharge the battery. It is not used for mowing with the lawn mower.

- Do not abuse extension cord while charging. Do not yank cord to remove it from plug receptacle. Keep cord away from heat, oil and sharp edges.
- When replacing batteries, all batteries should be replaced at the same time. Mixing fresh and discharged batteries could increase internal cell pressure and rupture the battery(ies).
- When inserting the batteries into this product, the proper polarity or direction must be observed. Reverse insertion of batteries can result in burned wires, sparks, leakage or explosion of batteries.
- Remove key before servicing, cleaning, or removing material from the lawn mower.
- Use only a sealed lead (acid), maintenance-free rechargeable battery rated at six volts and 12.5 amps.
- Do not dispose of the battery(ies) in a fire; the cell may explode. Check with local codes for special disposal instructions.
- Do not open or mutilate the battery(ies). Released electrolyte is corrosive and may cause damage to the eyes or skin. It may be toxic if swallowed.
- Exercise care in handling batteries in order not to short the battery (contact both positive and negative battery posts) with conducting materials such as rings, bracelets, and keys. The battery or conductor may overheat and cause burns.
- To ensure the lawn mower is in safe operating condition, frequently check and keep all nuts, bolts and screws tight. Ensure blade bolt is tightened to 35 to 40 ft-lb (48 to 54 N·m).
- Always keep a sharp blade on your lawn mower. When servicing blade, refer to blade maintenance section for correct installation and servicing procedures. Use identical replacement blades only.
- To reduce fire hazard, keep motor free of excessive grass, leaves, and accumulations of dirt.

- Check optional grass catcher bag frequently for wear or deterioration. Replace with a new bag when worn or damaged for your protection.
- When not in use, remove key and store lawn mower indoors in a dry, locked-up place out of the reach of children. Allow motor to cool before storing in an enclosure.
- At the time of manufacture, the lawn mower conformed to the safety standards in effect for rotary lawn mowers. To assure best performance and continued safety certification of the lawn mower, use genuine Toro replacement parts and accessories. Replacement parts and accessories made by other manufacturers may result in non-conformance with the safety standards, and that could be dangerous.

SAVE THESE INSTRUCTIONS FOR FUTURE REFERENCE!

Sound Pressure Level

This unit has a maximum sound pressure level of 76dB(A), based on the measurement of identical machines.

Note: The unit was tested under a no-load condition.

Sound Power Level

This unit has a maximum sound power level of 88 LwA, based on the measurement of identical machines.

Note: The unit was tested under a no-load condition.

Vibration Level

This unit has a maximum vibration level of 2.5 m/s^2, based on the measurement of identical machines.

Note: The unit was tested under a no-load condition.

Symbol Glossary

Safety alert triangle



General safety alert symbol



Read operator's manual



Severing of toes or fingers, rotary mower blade



Switch off: Remove plug from mains before adjusting, cleaning, if cable is entangled, or before leaving the lawn mower unattended for any period

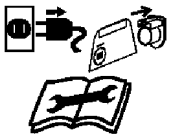

Shut off engine & remove key before leaving operator position, walk power mower



Thrown or flying objects, whole body exposure

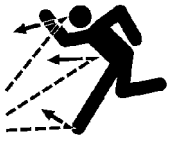

Thrown or flying objects, keep safety shields in place, rotary mower

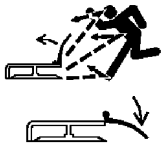

Severing of fingers, rotary mower blade



Severing of toes, rotary mower blade



Keep dry



Electrical shock, electrocution



Cutting element – height of cut



C.E. Mark



Double Insulated

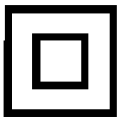

Battery charge level – low

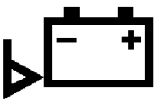

Battery charge level – high

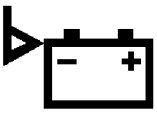

Do not open or remove safety shields while engine is running

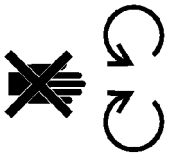

Wait until all machine components have completely stopped before touching them (blades continue to rotate after machine is switched off)



Low



High

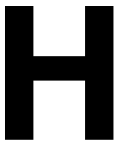

Splash-proof construction



Negative



Positive



Alternating current/sine wave



Insert plug to operate mower

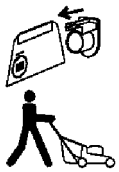

Push gray button forward, rotate bail to handle to run mower



Stay a safe distance from the machine, walk power mower

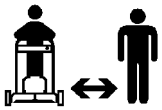

Avoid serious injury, operate only with deflector, mulch plug or entire catcher in place

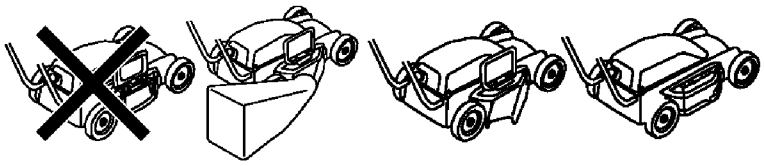

Assembly

Note: Determine the left and right sides of the lawn mower by standing in the operating position.

IMPORTANT: Do not insert the key into the plug receptacle until you assemble the lawn mower.

Installing the Handle

IMPORTANT: The control cable must be over, not under, the handle (Fig. 2).

WARNING

POTENTIAL HAZARD
- **Pulling on the control cable excessively may cause the lawn mower to start. When the lawn mower is operating, the blade is rotating.**

WHAT CAN HAPPEN
- **Contact with the rotating lawn mower blade could cause serious personal injury.**

HOW TO AVOID THE HAZARD
- **Do not lift the lawn mower by the control cable or pull excessively on the cable.**

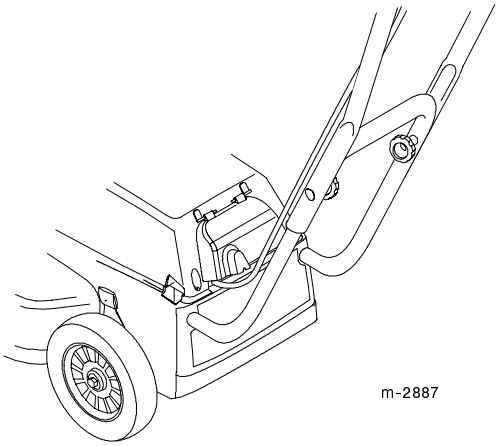

Figure 2

1. Lift the control cable above the holes in the rear of the shroud.
2. Slide the ends of the lower handle into the holes in the shroud.

Note: If the handle stops before the screw holes align in the center of the shroud openings, push down on the lower handle section while pushing the tubes into the holes in the shroud (Fig. 3). Push the tubes in until the screw holes are centered in the shroud openings.

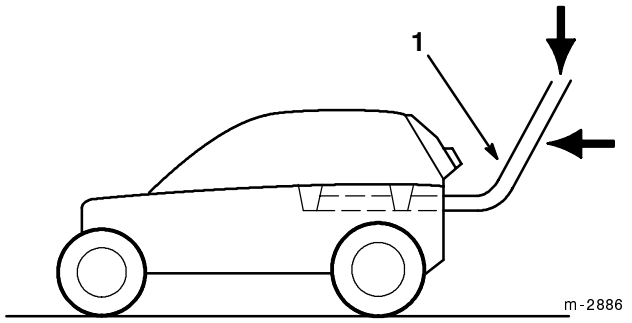

Figure 3

1. Lower handle

3. Secure the ends of the lower handle with two screws.

Note: The handle height adjusts to two different heights for operator comfort.

4. Stand behind the lawn mower to determine the handle height that best fits you.

5. Position the ends of the upper handle on the outside of the lower handle (Fig. 4).

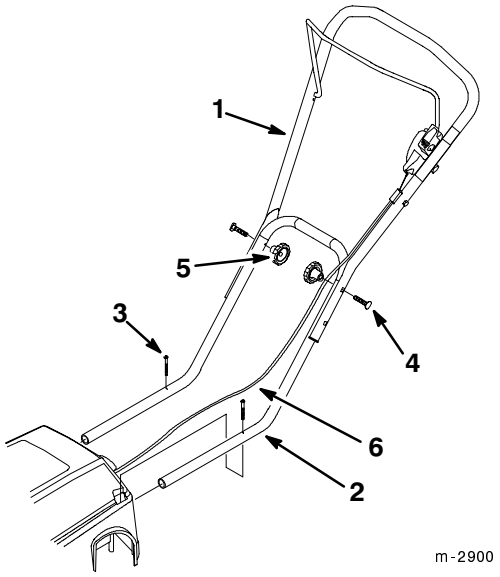

Figure 4

1. Upper handle
2. Lower handle
3. Screw (2)
4. Bolt (2)
5. Knob (2)
6. Control cable

6. Select one set of the upper handle holes and align it with the lower handle holes (Fig. 4).

7. Secure the handles in place with bolts and knobs (Fig. 4).

8. If the handles are in highest height position, use a clip to attach the cable to the left side of the lower handle tube (Fig. 5).

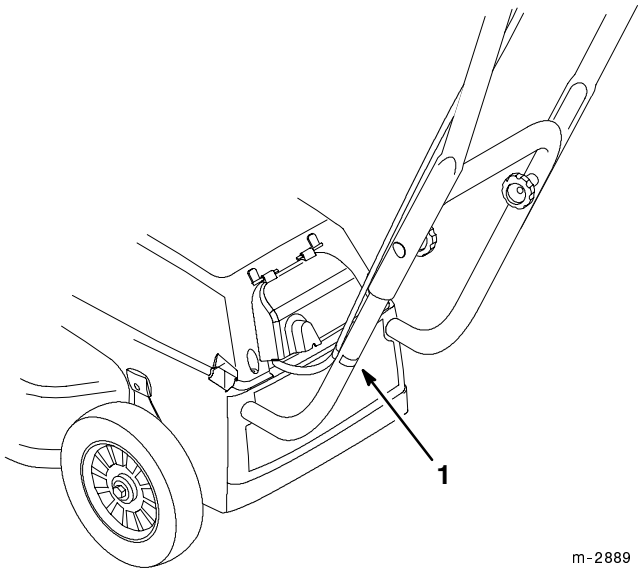

Figure 5

1. Clip

If the handles are in the lowest height position, use a clip to attach the cable to the right side of the lower handle tube (Fig. 6).

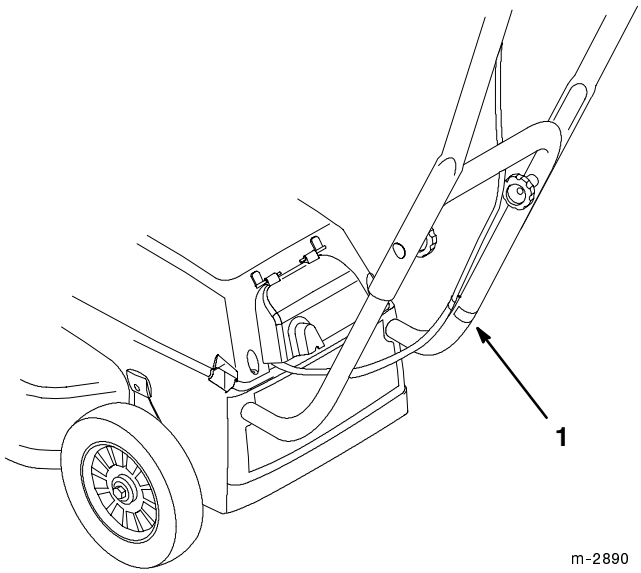

Figure 6

1. Clip

Installing the Side Discharge Chute

1. Use the handle on the mulch door to raise the door (Fig. 7).

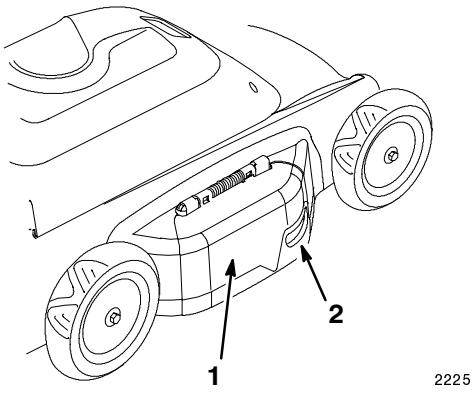

Figure 7

1. Mulch door 2. Handle

2. Hook the side discharge chute onto the pegs (Figs. 8 and 9).

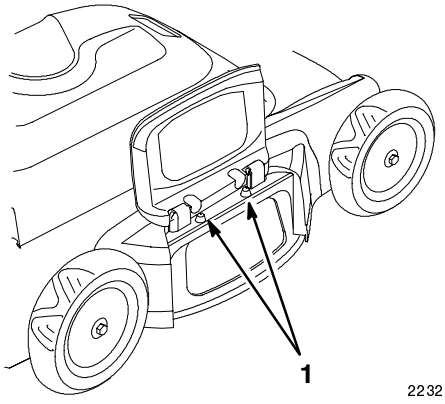

Figure 8

1. Peg (2)

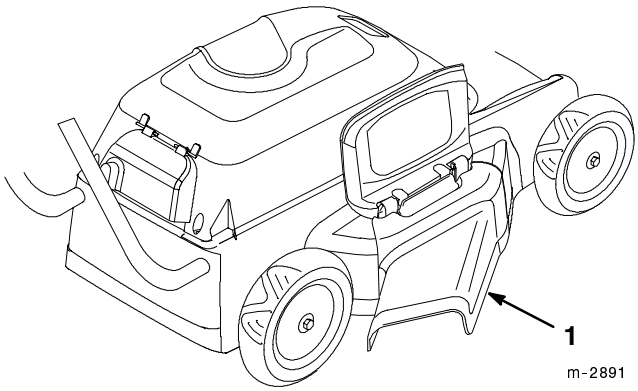

Figure 9

1. Side discharge chute

3. Lower the mulch door on top of the side discharge chute (Fig. 10).

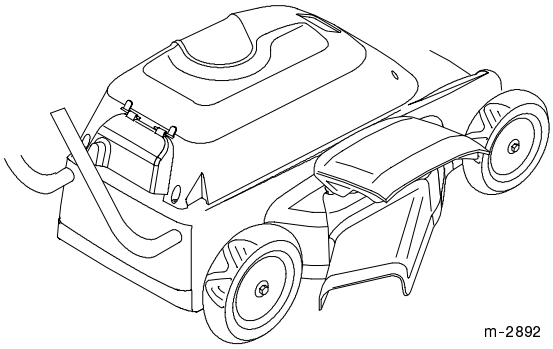

Figure 10

Installing the Rain Shield

The clear plastic rain shield may detach from the lawn mower due to rough handling during shipping. If the rain shield is not attached to the lawn mower when the carton is opened, install the rain shield onto the shroud.

1. Install the mounting tabs onto the rain shield mounting pins (Fig. 11).

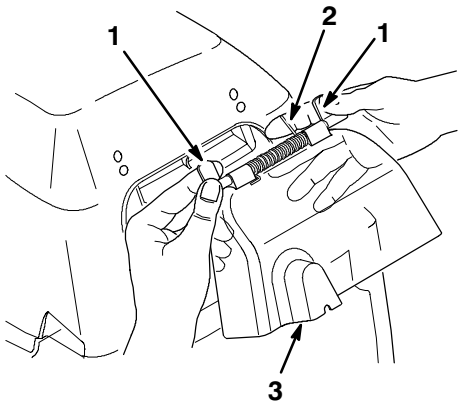

Figure 11

1. Mounting tab
2. Straight end of spring
3. Rain shield

2. Rotate the straight end of the spring and hold it up in the vertical position (Fig. 11).

3. Snap the mounting tabs into the matching holes in the shroud (Fig. 12).

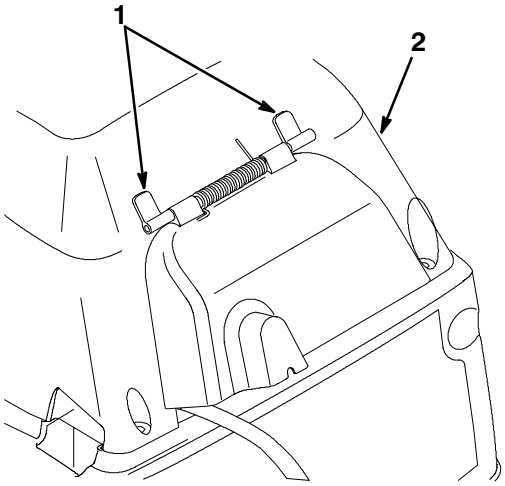

Figure 12

1. Mounting tab
2. Shroud

Before Starting

Charging the Battery

WARNING

POTENTIAL HAZARD
- **Contact with water while operating the lawn mower can cause an electric shock.**

WHAT CAN HAPPEN
- **Electric shock can cause injury or death.**

HOW TO AVOID THE HAZARD
- **Don't handle the plug or the lawn mower with wet hands or while standing in water.**
- **Use only a CE-listed extension cord.**

It takes approximately 12 to 16 hours to charge a fully discharged battery. **Charge the battery *after every use*. Failing to charge the battery after every use shortens the battery life. Charge the battery even if you run the lawn mower for only a few minutes. This battery does not have a "memory."**

Note: The battery is charged at the factory. However, before using the lawn mower for the first time, charge the battery and ensure that it has a full charge before operating.

To charge the battery:

1. Always charge the battery in a dry area protected from the weather. Also, keep the lawn mower away from water and flammable substances.

2. If the key is in the plug receptacle, remove it (Fig. 13).

WARNING

POTENTIAL HAZARD
- **The electrical cord can be damaged.**

WHAT CAN HAPPEN
- **A damaged electrical cord could cause a shock or fire.**

HOW TO AVOID THE HAZARD
- **Thoroughly inspect the electrical cord before charging the unit. If cord is damaged, do not charge the battery. Replace or repair a damaged cord immediately. Contact your Authorized Service Dealer for assistance.**

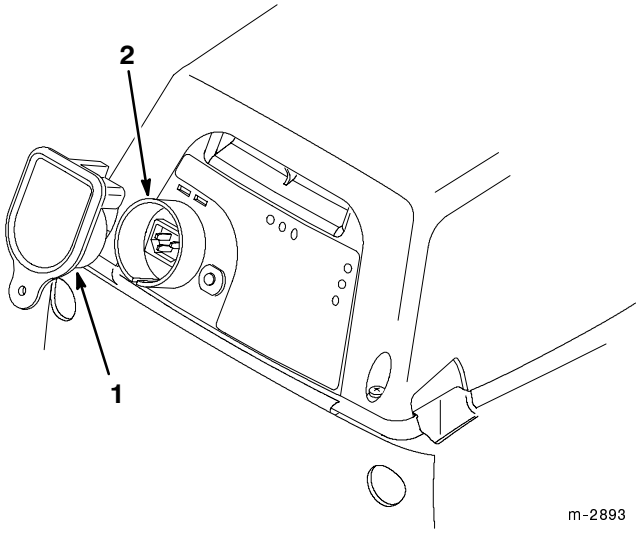

Figure 13

1. Key
2. Plug receptacle

3. Lift the rain shield, insert the extension cord into the plug receptacle, and connect other end of extension cord to a normal 230-volt household outlet (Fig. 14).

IMPORTANT: Use only a CE-listed extension cord (included with the lawn mower).

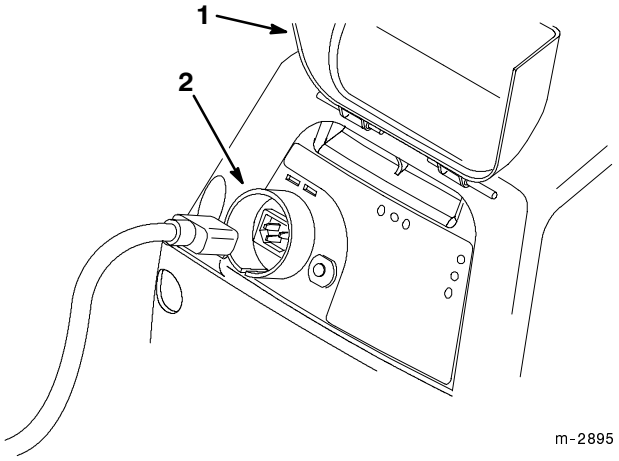

Figure 14

1. Rain shield
2. Plug receptacle

Note: The three vertical LED lights on the control panel indicate the charging status (Fig. 15). Refer to the *LED Charging Lights Chart* on page 12 for a summary of the LED lights.

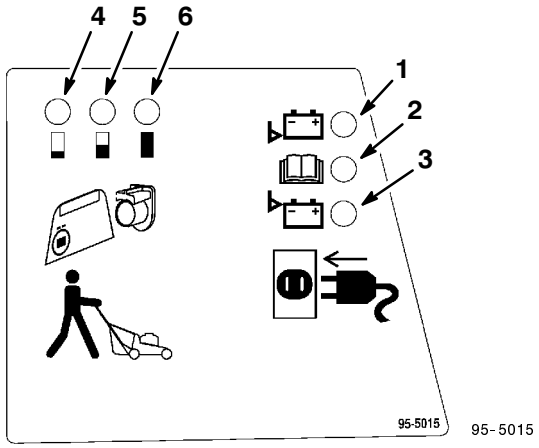

Figure 15

1. Red light
2. Yellow light
3. Green light
4. Quarter full box
5. Half full box
6. Full box

When the red light on the control panel begins to flash, the battery is present and is ready to charge.

After a few minutes, the red light stops flashing and becomes a steady red light. This indicates that the battery is charging.

When the battery is almost fully charged, the red light goes out and the green light comes on. The red and green light will alternately turn on and off. When the green light is on more than the red light, the battery is fully charged.

Note: Do not unplug the extension cord by pulling on it. To unplug the cord, grasp the plug, not the cord.

IMPORTANT: Toro designed your lawn mower with a built-in battery charger that checks the battery's charging status and charges the battery only when necessary. Therefore, we recommend that you leave the battery plugged in whenever you are not using it. During the non-mowing season, you can unplug and store the lawn mower for up to three months if the battery is fully charged and the lawn mower is stored in a cold, dry place.

Note: When the lawn mower is left on charge, it is normal for the red and green lights to alternately turn on and off.

LED CHARGING LIGHTS CHART			
Charging Status	**Red**	**Green**	**Yellow**
Pre-charge qualification—charger testing battery condition/trickle charging battery. Trickle charge can last from minutes to hours.	Blinking	Off	Off
Battery charging	On	Off	Off
Battery charged	Off	On	Off
Battery absent or defective	Off	Off	On
Charging fault—charger malfunctioning	Not Applicable	Not Applicable	On
Charge pending—temperature too hot or cold to charge	Not Applicable	Not Applicable	Blinking

Checking the Battery Power Status

The three horizontal LED lights at the top of the control panel indicate approximately how much charge is left in the battery while the lawn mower is operating (Fig. 15). The lights are only accurate when the lawn mower is operating and cutting grass. The following is an explanation of the symbols under the battery power status LED lights:

- Full Box: Battery is between 50% and 100% charged.
- Half Full Box: Battery is between 25% and 50% charged.
- Quarter Full Box: Battery is between 5% and 25% charged.
- If all LED lights are off, the battery has less than 5% charge left and should be recharged.

IMPORTANT: You will shorten the battery's life if you run the lawn mower after the battery lights have turned off. Do not continue to mow; charge the battery.

Operation

Each time before you mow, make sure that the control bar operates properly. When you release the control bar, the motor and the blade should stop. If they do not, contact an Authorized Service Dealer.

Note: This lawn mower is intended for residential use only.

Using the Key

The lawn mower only operates when key is fully seated in the plug receptacle (Fig. 16). To prevent accidental starting or unauthorized use of the lawn mower, always remove the key from the plug receptacle when leaving the lawn mower unattended. The key has a tab with a hole in it to allow the key to hang from a nail, out of the reach of children. **Read the warning label on the key.**

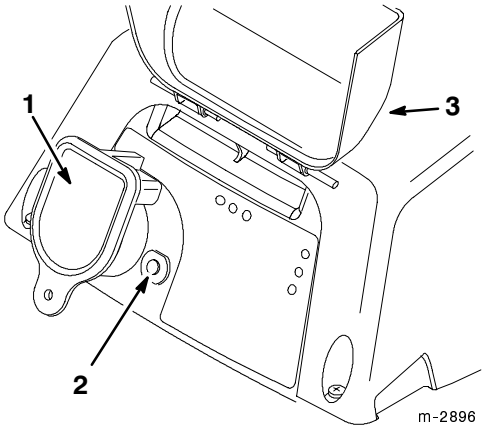

Figure 16

1. Key
2. Circuit breaker button
3. Rain shield

Starting the Lawn Mower

1. Push the lawn mower onto a flat concrete or asphalt surface.

Note: Starting the lawn mower in thick grass could cause the lawn mower to clog.

2. Lift the rain shield and insert the key fully into the plug receptacle (Fig. 16).

3. Pull the control bar toward the handle while pushing down the slide on the control (Fig. 17).

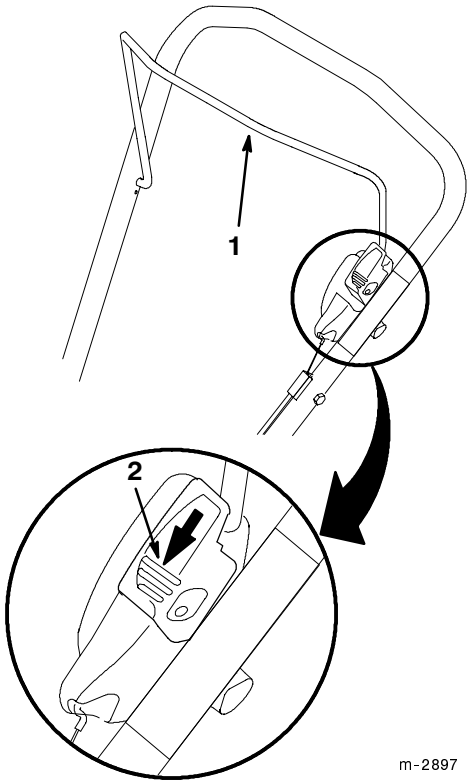

Figure 17

1. Control bar
2. Slide pushed down

4. Squeeze the control bar to the handle (Fig. 18).

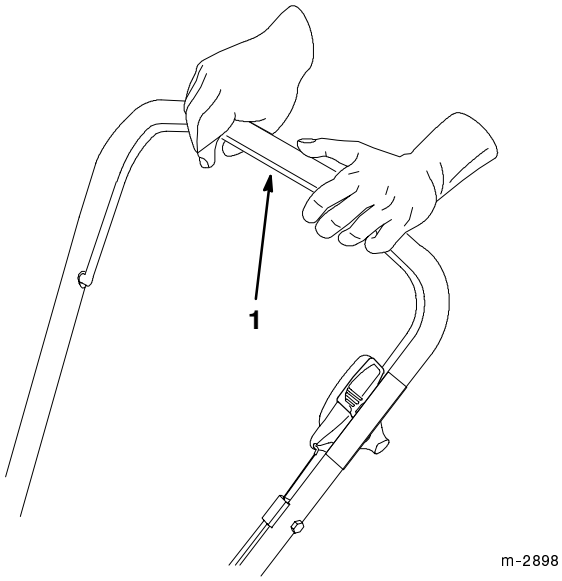

Figure 18

1. Control bar

Note: Keep the lawn mower running when turning the lawn mower. Turning the lawn mower off when making a turn does not save the battery's energy.

Stopping the Lawn Mower

1. Release the control bar.

WARNING

POTENTIAL HAZARD
- **When the key is in the plug receptacle, the lawn mower is operational. Someone could accidentally start the lawn mower.**

WHAT CAN HAPPEN
- **Accidentally starting the lawn mower could seriously injure you or other bystanders.**

HOW TO AVOID THE HAZARD
- **Always remove the key from the plug receptacle when leaving the lawn mower unattended, even for a short period of time.**

2. Remove the key from the plug receptacle if the lawn mower will be unattended for any period of time. Hang the key in a high place out of reach of children.
3. **Always charge the battery *immediately after every use of the lawn mower.* If you do not charge the battery after each use, you will shorten the battery life.** See *Charging the Battery* on page 10.

IMPORTANT: Toro designed your lawn mower with a built-in battery charger that checks the battery's charging status and charges the battery only when necessary. Therefore, we recommend that you leave the battery plugged in whenever you are not using it. During the non-mowing season, you can unplug and store the lawn mower for up to three months if the battery is fully charged and the lawn mower is stored in a cold, dry place.

Resetting the Circuit Breaker

If the lawn mower is run under too much load, the circuit breaker will trip. Follow these instructions to reset the circuit breaker.

IMPORTANT: Never reset the circuit breaker when the key is in the receptacle and when you squeeze the control bar to the handle.

1. Remove the key from the plug receptacle (Fig. 13).
2. Wait 30 to 60 seconds before pushing in the circuit breaker button (Fig. 16).
3. Install the key in the plug receptacle.
4. Resume cutting under less load.

If the circuit breaker repeatedly trips, raise the cutting height or use the side discharge chute.

Mowing Tips

Battery Run Time

With a battery-powered lawn mower, the condition of the grass and the way that you mow will affect the how long the battery will run on a single charge at each mowing.

The following are some things that will affect battery run time:

- **Moisture content of grass**—The more moisture there is in the grass, the faster the battery will run down.
- **Walking/mowing speed**—The faster you walk, the faster the battery will run down.
- **Mode of operation**—Mulching the grass requires the most battery energy. Bagging requires the second highest amount of battery energy, and side discharging uses the least.
- **Cutting height**—If the battery is running down too fast, raise the cutting height one notch.

General Mulching Tips

Toro designed your lawn mower to mulch grass when the mulch door is completely closed (Fig. 7). For the best cutting results and lawn appearance, follow these instructions whether cutting grass or leaves:

- Maintain a **sharp blade** throughout the cutting season. Periodically file down any nicks on the blade.
- **Only mow dry grass or leaves.** Wet grass and leaves tend to clump on the yard and may cause the lawn mower to plug up or the motor to stall.

WARNING

POTENTIAL HAZARD
- **Wet grass or leaves can cause you to slip and contact blade.**

WHAT CAN HAPPEN
- **Blade contact can seriously injure you.**

HOW TO AVOID THE HAZARD
- **Mow only in dry conditions.**

- Remove the key from the receptacle and clean the clippings or leaves from the underside of the lawn mower deck after each mowing. Use a wooden tool, not a metal one.
- Grass grows at different rates at different times of the year. In the heat of summer, it is generally best to cut grass at the 2-1/2-inch (6.4 cm), 3-inch (7.6 cm), or 3-1/2-inch (8.9 cm) cutting height settings. Cut only

about a third of the grass blade. Do not cut below the 2-1/2-inch (6.4 cm) setting unless grass is sparse, or it is late fall when grass growth begins to slow down.

- When changing cutting height from an established setting to a lower cutting height, the grass may appear ragged or uneven until the grass adjusts to the new established cutting height and regains its normal appearance.
- When cutting grass over six inches (15 cm) tall, you may want to first mow using the side discharge chute, or try the highest cutting height setting and a slower walking speed; then mow again at a lower setting for the best lawn appearance. If the grass is too long, leaving clumps on top of lawn, the lawn mower may plug and cause the motor to stall.
- Alternate the mowing direction. This helps disperse the clippings over the lawn for even fertilization.

If the finished cut lawn appearance is unsatisfactory, try one or more of the following:

- Sharpen the blade.
- Walk at a slower pace while mowing.
- Raise the cutting height on your lawn mower.
- Cut the grass more frequently.
- Overlap cutting swaths instead of cutting a full swath with each pass.
- Set the cutting height on the front wheels one notch lower than that of the rear wheels. For example, set the front wheels at the 2-1/2-inch (7.6 cm) setting and the rear wheels at the 3-inch (6.4 cm) setting.

Cutting Leaves

- When cutting is complete, always be sure that half of the lawn shows through the cut leaf cover. This may require one or more passes over the leaves.
- For light leaf coverage, position all the wheels at the same cutting height setting.
- Walk at a slower mowing speed if the leaves are not cut up finely enough to be hidden down in the grass.
- If you cut up a lot of oak leaves, add lime to your grass in the spring. Lime reduces the acidity of the oak leaves.

Adjusting the Cutting Height

The lawn mower has five cutting height settings: 1-1/2 inches (3.8 cm), 2 inches (5.1 cm), 2-1/2 inches (6.4 cm), 3 inches (7.6 cm), and 3-1/2 inches (8.9 cm). The rear adjustment lever adjusts the cutting height for both rear wheels, and the front adjustment lever adjusts both front wheels.

WARNING

POTENTIAL HAZARD
- **Adjusting the height-of-cut levers could bring your hands into contact with a moving blade.**

WHAT CAN HAPPEN
- **Contact with blade could cause serious personal injury.**

HOW TO AVOID THE HAZARD
- **Stop the motor, wait for all moving parts to stop, and remove the key from the plug receptacle before changing the cutting height.**
- **Do not put your fingers under the housing to lift the lawn mower when adjusting the height-of-cut levers.**

1. Stop the motor and wait for all moving parts to stop.
2. Remove the key from the plug receptacle.
3. For easier adjustment, lift the housing up so that the wheels are off ground. **Do not place your hands under deck to lift the housing.**
4. Squeeze the adjustment lever toward the wheel and move the lever to the desired setting (Fig. 19). Ensure that the pin on the adjustment lever engages the notch in the lawn mower housing.

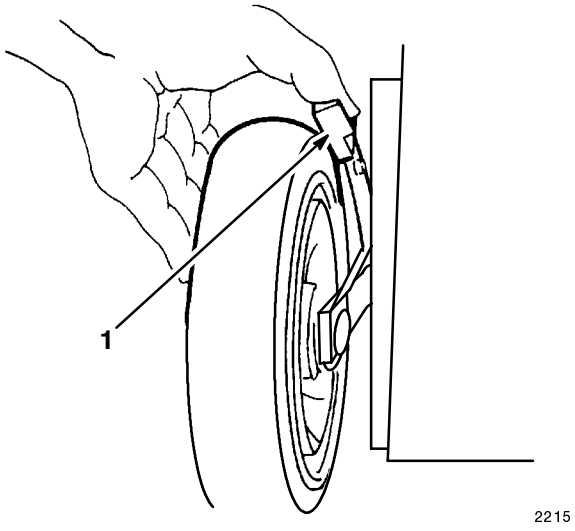

Figure 19

1. Height-of-cut adjustment lever

5. Adjust all the wheels to the same setting.

Note: For easier adjustment of the rear wheels, grasp the lower handle with one hand and lift up the lawn mower slightly so that the wheel is off the ground. Then squeeze the adjustment handle toward the wheel.

Maintenance

Recommended Maintenance Schedule

Service Item	Service Operation	Each Use	50 Hours or Yearly
Housing	Clean built-up grass clippings and dirt.	X	
Battery	Charge the battery after every use and during storage.	X	
Blade	Sharpen or replace the blade; maintain it more frequently if the edge dulls quickly in rough or sandy conditions.		X
	Check stopping time of the blade every 50 operating hours or at the start of each mowing season. The blade must stop within three seconds of releasing the control bail; if not, contact your Authorized Service Dealer for repair.		X

WARNING

POTENTIAL HAZARD
- **When the key is in the plug receptacle, the lawn mower is operational. Someone could accidentally start the lawn mower.**

WHAT CAN HAPPEN
- **Someone accidentally starting the lawn mower could seriously injure you or other bystanders.**

HOW TO AVOID THE HAZARD
- **Always remove the key from the plug receptacle when leaving the lawn mower unattended, even for a short period of time.**

Cleaning the Lawn Mower Housing

Before cleaning the lawn mower, stop the motor, wait for all moving parts to stop, and remove the key from the plug receptacle.

IMPORTANT: Do not spray or pour water on the lawn mower when cleaning. Moisture can get trapped in the lawn mower and cause corrosion of internal parts.

After Every Use

- Clean the underside of the lawn mower housing. Be particularly careful to keep the front cavity clear of all debris (Fig. 20). Remove dirt and grass clippings with a hardwood scraper. Avoid burrs and sharp edges.

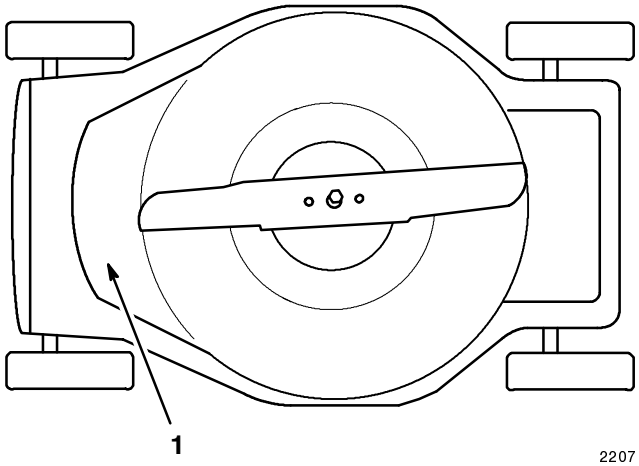

Figure 20

1. Front cavity

- Brush all debris off the top of the lawn mower housing after every use.

After Each Season

- Remove the top shroud (Fig. 21) and clean out any debris from underneath it and around battery with compressed air, a vacuum cleaner, or a brush.

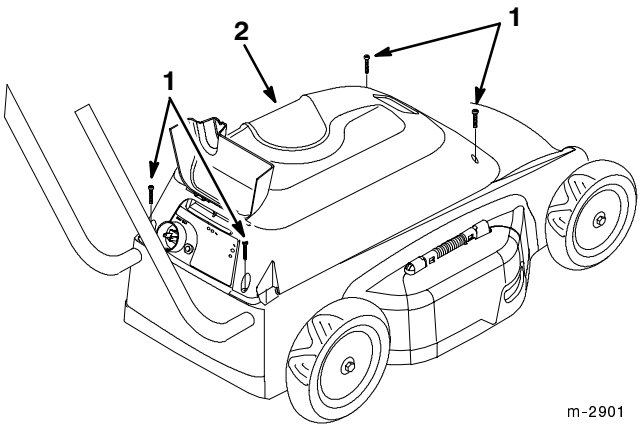

Figure 21

1. Screw (4)
2. Shroud

IMPORTANT: Do not use metal objects to clean around the battery. If metal objects contact the positive and negative posts at the same time, this could short the battery. The battery or conductor may overheat and cause burns.

- Check for any discolored or charred wires and battery and switch contacts. If any are damaged, contact your Authorized Service Dealer for repair.

Maintaining the Blade

Always mow with a sharp blade. A sharp blade cuts cleanly and without tearing or shredding the grass blades like a dull blade.

WARNING

POTENTIAL HAZARD
- **When the extension cord is connected to the lawn mower and plugged into a normal household outlet, the lawn mower is operational.**

WHAT CAN HAPPEN
- **Someone could accidentally start the lawn mower.**

HOW TO AVOID THE HAZARD
- **Do not attempt to inspect, remove, or replace the blade without first disconnecting the extension cord from the lawn mower.**

WARNING

POTENTIAL HAZARD
- **The blade is sharp.**

WHAT CAN HAPPEN
- **Contact with a sharp blade can cause serious personal injury.**

HOW TO AVOID THE HAZARD
- **Wear gloves or wrap the sharp edges of the blade with a rag.**

1. Stop the motor and wait for all moving parts to stop. Remove the key from the plug receptacle.
2. Tip the lawn mower on its side (Fig. 20).

Inspecting the Blade

Carefully examine the blade for sharpness and wear, especially where the flat and the curved parts meet (Fig. 22A). Since sand and abrasive material can wear away the metal that connects the flat and curved parts of the blade, check the blade before using the the lawn mower. If you notice a slot or wear (Fig. 22B and 22C), replace the blade.

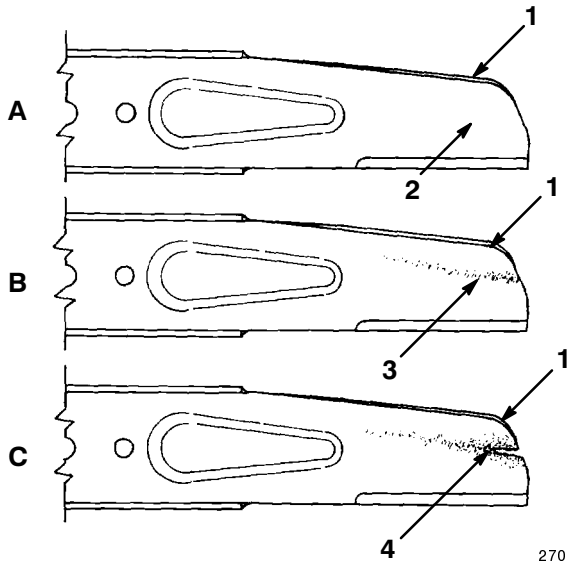

Figure 22

1. Sail
2. Flat part of blade
3. Wear
4. Slot formed

Note: For the best performance, install a new blade before the cutting season begins. During the year, file down small nicks to maintain the cutting edge.

WARNING

POTENTIAL HAZARD
- **A worn or damaged blade could break and a piece of blade could be thrown in operator's or bystander's direction.**

WHAT CAN HAPPEN
- **A thrown piece of blade could cause serious personal injury or death to operator or bystanders.**

HOW TO AVOID THE HAZARD
- **Inspect the blade periodically for wear or damage.**
- **Replace a worn or damaged blade.**

Removing the Blade

Grasp the end of the blade using a rag or a thickly padded glove. Remove the blade bolt, the washer, and the blade (Fig. 23).

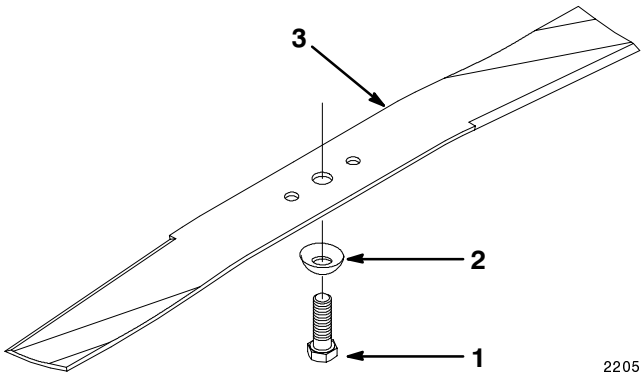

Figure 23

1. Blade bolt
2. Washer
3. Blade

Sharpening and Balancing the Blade

Sharpening the Blade

File the top side of the blade to maintain its original cutting angle (Fig. 24A) and inner cutting edge radius (Fig. 24B).

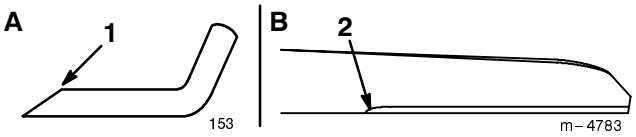

Figure 24

1. Sharpen at this angle only
2. Maintain the original radius here

Note: The blade will remain balanced if you remove the same amount of material from both cutting edges.

IMPORTANT: Check the balance of blade by putting it on a blade balancer. You can purchase an inexpensive balancer at a hardware store. A balanced blade stays in a horizontal position and an unbalanced blade settles to the heavy side. If blade is not balanced, file more metal off the cutting edge on the heavy end of the blade.

Installing the Blade

1. Install a sharp, balanced blade, a washer, and a blade bolt.

Note: The sail part of blade must point toward the top of the lawn mower housing to ensure a correct installation. The washer is curved and must be installed with the curve side down as shown in Figure 23.

2. Tighten the blade bolt to 35 to 40 ft-lb (48 to 54 N·m).

Replacing the Battery

1. Stop the motor and remove the key from the plug receptacle.
2. Remove the four screws from the shroud and remove the shroud (Fig. 21).

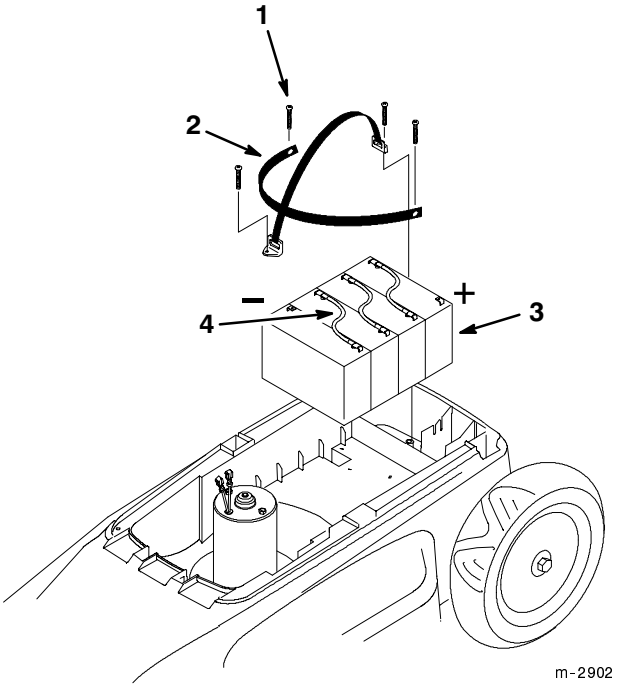

Figure 25

1. Screw (4)
2. Hold-down strap (2)
3. Battery pack
4. Jumper wire (3)

3. Move the control panel out of the way.
4. Remove the screws from the battery hold-down strap (Fig. 25).
5. Disconnect the positive and negative wires from the battery terminals (Fig. 25).
6. Remove the three jumper wires from the battery and discard them in the household trash (Fig. 25).
7. The bottom of the battery pack is secured with tape to the lawn mower housing. Rock the battery pack to free the batteries from the tape, then remove them from the lawn mower.
8. Scrape the old tape off the bottom of the lawn mower with a putty knife.

Note: Use only a sealed lead (acid), maintenance-free rechargeable battery rated at six volts and 12.5 amps.

9. Peel the protective paper off the double-backed tape on the bottom of the new battery.
10. Position the new battery in the lawn mower so that the negative leads are on the right-hand side, and the positive leads are on the left-hand side of the lawn mower (Fig. 25).

Note: Determine the left and right sides of the lawn mower by standing in the operating position.

11. Connect the positive and negative wires to the battery terminals (Fig. 25).
12. Install the battery hold-down strap (Fig. 25).
13. Install the shroud with four screws (Fig. 21).

Disposing of the Old Battery

IMPORTANT: Do not place used batteries in your household trash!

IMPORTANT: This sealed lead (acid) battery must be collected, recycled, or disposed of in an environmentally sound manner.

Incinerating, landfilling, or mixing sealed lead (acid) batteries with the municipal solid waste stream is **prohibited by law i**n some areas.

Return this battery to an approved sealed lead (acid) battery recycler. This may be where you purchased the battery.

Contact your local waste management officials for other information regarding the environmentally sound collection, recycling, and disposal of this battery.

Servicing a Double-insulated Lawn Mower

In a double-insulated lawn mower, there are two systems of insulation provided instead of grounding. No grounding means is provided on a double-insulated lawn mower, nor should a means for grounding be added to the lawn mower. Servicing a double-insulated lawn mower requires extreme care and knowledge of the system, and should be done only by a qualified service person. Replacement parts for a double-insulated lawn mower must be identical to the parts they replace. A double-insulated lawn mower is marked with the words *DOUBLE INSULATION* or *DOUBLE INSULATED*. The symbol (square within a square) ⧈ may also be marked on the lawn mower.

Troubleshooting

Toro designed and built your lawn mower for trouble-free operation. Check the following components and items carefully. If a problem continues, see your Authorized Service Dealer.

PROBLEM	CORRECTIVE ACTION
Motor will not start	1. Insert the key in the plug recepticle. 2. Charge the battery. 3. Reset the circuit breaker.
Motor starts hard or loses power	1. Clean the lawn mower discharge chute. 2. Clean the underside of the lawn mower deck. 3. Move the lawn mower to the pavement; do not start in the grass.
Lawn mower or motor vibrates excessively	1. Balance the blade. 2. Tighten the blade mounting nut. 3. Clean the lawn mower discharge chute. 4. Clean the underside of the lawn mower deck. 5. Tighten the motor mounting bolts.
Uneven cutting pattern	1. Place all four wheels at the same height. 2. Sharpen and balance the blade. 3. Change the mowing pattern. 4. Clean the underside of the lawn mower deck.
Discharge chute plugs	1. Raise the cutting height. 2. Allow the grass to dry before mowing. 3. Clean the underside of lawn mower deck.

Storage

Store the lawn mower in a cool, clean, and dry place such as an unheated garage. Do not store a battery-powered lawn mower in a warm basement. Cover the lawn mower to keep it clean and protected.

1. Clean the lawn mower housing. Refer to *Cleaning the Lawn Mower Housing* on page 16.
2. Remove grass clippings, dirt, and grime from external parts of the shrouding and the top of the lawn mower housing.
3. Check the condition of the blade. Refer to *Maintaining the Blade* on page 17.
4. Tighten all nuts, bolts, and screws.

IMPORTANT: Toro designed your lawn mower with a built-in battery charger that checks the battery's charging status and charges the battery only when necessary. Therefore, we recommend that you leave the battery plugged in whenever you are not using it. During the non-mowing season, you can unplug and store the lawn mower for up to three months if the battery is fully charged and the lawn mower is stored in a cold, dry place.