Form No. 3382-736 Rev B

TORO®

Count on it.

Parts Catalog

Pro Sneak 365 Vibratory Plow

Model No. 25403—Serial No. 314000001 and Up

Model No. 25403A—Serial No. 314000001 and Up

Model No. 25403C—Serial No. 314000001 and Up

Register at www.Toro.com.
Original Instructions (EN)

3382-736 B

Ordering Replacement Parts

To order replacement parts, please supply the part number, the quantity, and the description of each part desired.

Understanding Reference Numbers

Each identified part in an illustration has a reference number. The reference number for a part also appears in the parts list, along with other information about the part.

This catalog uses two special reference number formats, one to indicate parts in a service assembly and another to indicate the quantity of a given part in an illustration.

Service Assembly Reference Numbers

Parts in service assemblies have reference numbers in the form a:b. The a represents the reference number of the entire service assembly and the b represents a sequential number unique to each part within the service assembly.

For example, a wheel assembly might be identified by reference number 6, the tire by 6:1, the valve by 6:2, and the wheel by 6:3. When you order the assembly identified by reference number 6, you receive all parts identified by reference numbers 6:1,6:2, and 6:3. However, you may also order any part individually. Reference numbers of this type appear in illustration and in parts lists.

Reference Numbers Indicating Quantity

In an illustration, if a reference number indicates more than one part, the reference number has the form nX y. The n represents the quantity of the part, the X is the multiplication symbol, and the y represents the reference number.

For example, in an illustration, the reference number 2X 37 means that two of the parts identified by reference number 37 are indicated.

Contents

Pivot Assembly . . . 6
Support and Floorboard Assembly . . . 8
Front Frame and Panel Assembly . . . 10
Console Assembly . . . 12
Seat and Rear Frame Assembly . . . 14
Drive Assembly . . . 16
Drive Axle Assembly No. AU110858A1-03 . . . 18
Transmission Assembly No. AU104951 . . . 20
Drive Shaft Assembly No. AU111086A1 . . . 22
Ground Drive Control Assembly . . . 24
Neutral Switch Mounting Assembly No. 130-7376 . . . 26
Ground Drive Spring Assembly . . . 28
Seat Belt Assembly . . . 30
Roll-Over Protection System Assembly . . . 32
Brake Assembly . . . 34
Brake Caliper Assembly No. AUH673926 . . . 36
Shroud Assembly . . . 38
Engine Assembly . . . 40
Air Cleaner and Radiator Hose Assembly . . . 42
Air Filter Assembly No. 127-6617 . . . 44
Electrical Assembly . . . 46
Battery Assembly . . . 48
Electrical Relay, Lamp and Switch Assembly . . . 50
Fuel Tank Assembly . . . 52
Fuel Pump and Oil Filter Assembly . . . 54
Hydraulic Tank Assembly . . . 56
Steering Assembly . . . 58
Hydraulic Steering Valve Assembly No. AU407213A1 . . . 60
Pump Assembly . . . 62
Hydraulic Variable Pump Assembly No. AU239918A1 . . . 64
Hydraulic Plumbing Assembly . . . 66
Hydraulic Piston Motor Assembly No. AU239920A2 . . . 68
Hydraulic Plumbing Assembly No. 2 . . . 70
Plow Frame, Blade Mounting and Transmission Assembly . . . 72
Gear Case Assembly No. AUH530204 . . . 74
Plow Cylinder Assembly . . . 76
Plow Pivot and Quick Attach Slide Assembly . . . 78
23 Inch Wheel and Tire Assembly . . . 80
26 Inch Wheel and Tire Assembly . . . 82
Cylinder Block Assembly . . . 84
Gear Housing Assembly . . . 86
Flywheel Housing and Oil Sump Assembly . . . 88
Cylinder Head and Cover Assembly . . . 90
Suction Manifold Assembly . . . 92
Exhaust Manifold Assembly . . . 94
Diesel Particulate Filter Assembly . . . 96
Camshaft and Driving Gear Assembly . . . 98
Crankshaft and Piston Assembly . . . 100
Lubrication and Oil System Assembly . . . 102
Cooling Water System Assembly . . . 104
Fuel System Assembly . . . 106
Fuel Injection Valve Assembly . . . 108
Fuel Line Assembly . . . 110
Starting Motor Assembly . . . 112

© 2019—The Toro® Company
8111 Lyndale Avenue South
Bloomington, MN 55420

Contact us at www.Toro.com.
Printed in the USA.
All Rights Reserved

Contents (continued)

Generator Assembly 114
Electronic Control Unit Assembly. 116
Electric Parts Assembly. 118
Gasket Set. 120
Attachments and Accessories 122

Pivot Assembly

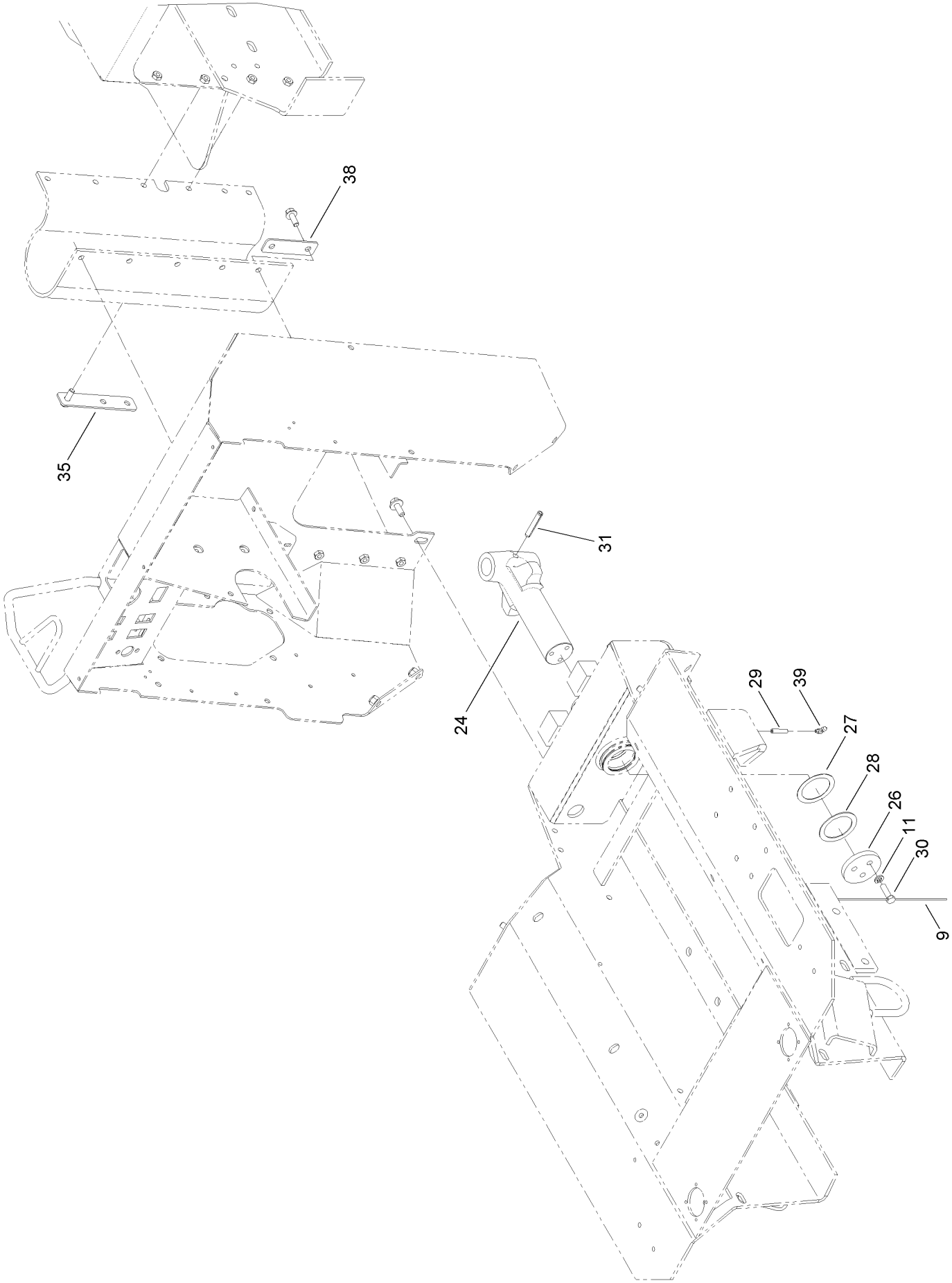

Pivot Assembly (continued)

Ref.	Part Number	Qty.	Description
9	AU391-620	1	Wire-Steel
11	3253-21	3	Washer-Lock
24	AU127310A1-01	1	Pivot-Articulation
26	AUH182543	1	Cap
27	AUH191148	2	Shim-Thin
28	AUH191155	2	Shim
29	AU219-417	1	Fitting-Lube
30	AUH95877	3	Screw-HH
31	AU38-12436	1	Pin-Slotted, Spring
35	125-6648-03	1	Plate
38	127-1092-03	1	Plate
39	1481	1	Fitting-Grease

Support and Floorboard Assembly

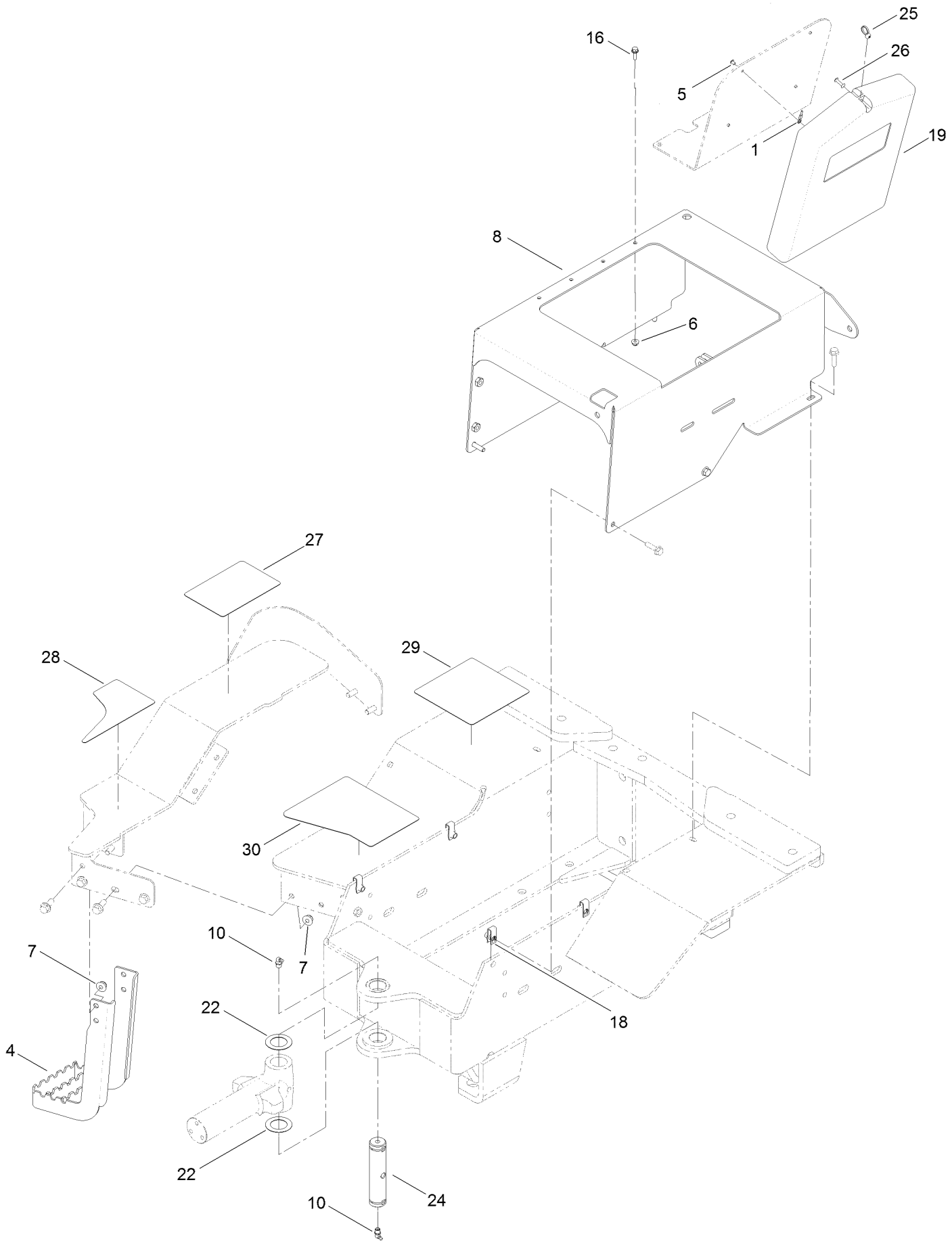

Support and Floorboard Assembly (continued)

Ref.	Part Number	Qty.	Description
1	AUR46465	1	Lanyard
4	125-6656-01	1	Step-Platform
5	1-803035	4	Rivet-Pop
6	104-7201	4	Nut-HF
7	104-8301	8	Nut-HF, NI
8	127-1098-01	1	Support-Seat
10	302-33	2	Fitting-Grease
16	115-5103	4	Screw-HHF
18	AU100862	4	Nut-U

Ref.	Part Number	Qty.	Description
19	AU103216	1	Holder-Manual, Operator
22	AUH257915	2	Shim
24	AUH371054	1	Pin-Pivot
25	AUR40745	1	Strap-Tie, Nylon
26	AUR46463	1	Post-Manual
27	127-1078	1	Tread-Floorboard
28	127-1077	1	Tread-Floorboard
29	127-1080	1	Tread-Floorboard
30	127-1079	1	Tread-Floorboard

Front Frame and Panel Assembly

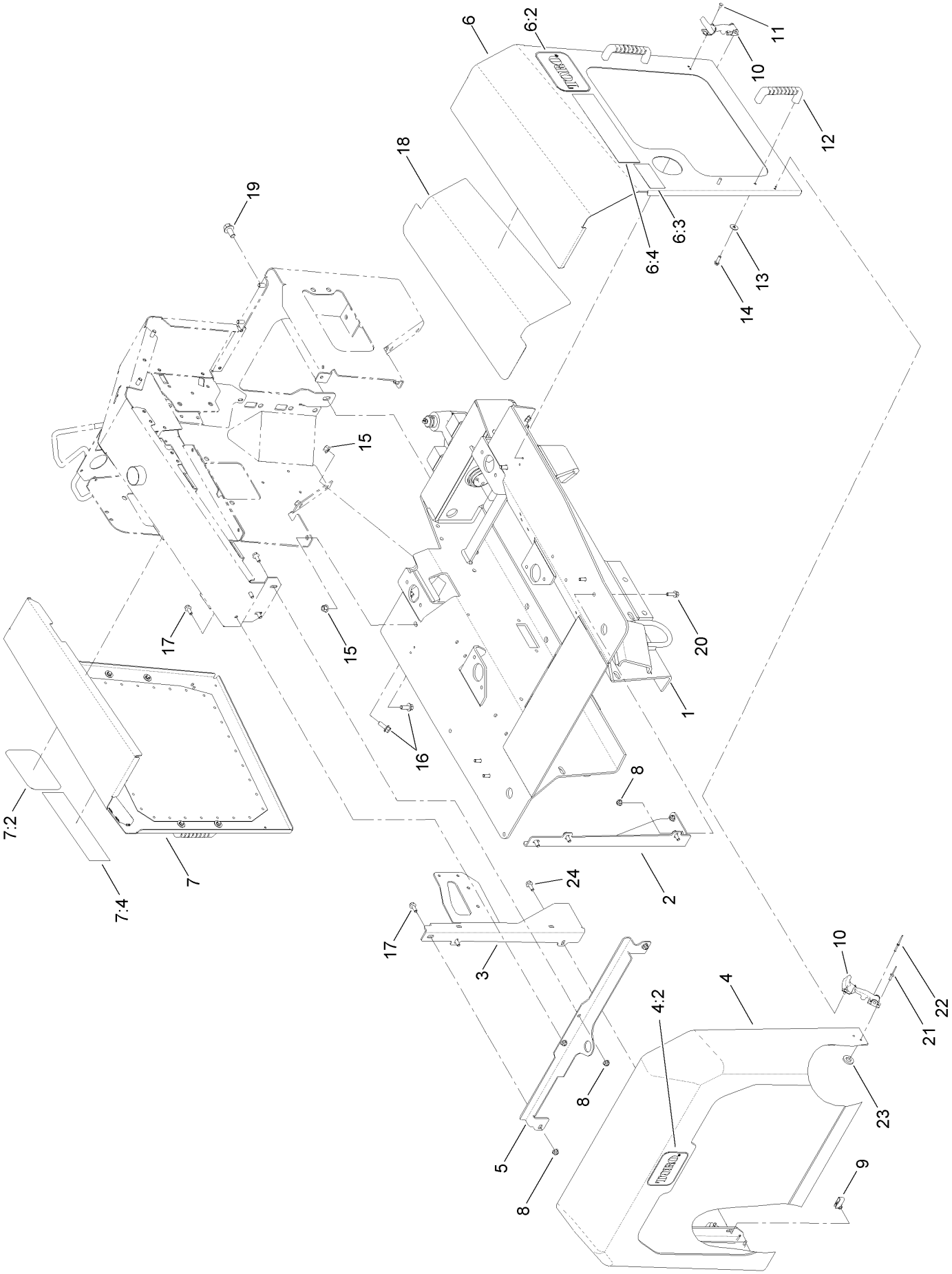

Front Frame and Panel Assembly (continued)

Ref.	Part Number	Qty.	Description
1	127-6569	1	Front Frame And Decal ASM
2	127-6586-03	1	Bracket-Cooler, LH
3	127-6585-03	1	Bracket-Cooler, RH
4	130-4265	1	Front Cover ASM
4:2	67-1300	1	Decal
5	127-6582-03	1	Bracket-Cooling, Top
6	130-4275	1	LH Hood Panel ASM
6:2	62-5550	1	Decal
6:3	125-4963	1	Decal-Surface, Hot
6:4	130-4339	1	Decal-Pro Sneak 365
7	130-4274	1	RH Hood Panel ASM
7:2	62-5550	1	Decal
7:4	130-4339	1	Decal-Pro Sneak 365
8	104-8300	10	Nut-HF, NI
9	AU100862	4	Nut-U
10	ST35289	4	Latch-Flex, Draw
11	3290-409	12	Rivet
12	65-5100	4	Handle-Door
13	87-6630	8	Washer-Plain
14	46-8091	8	Screw-HWH
15	32128-36	6	Nut-HF
16	3234-42	6	Screw-HHF
17	3234-47	6	Screw-HHF
18	130-7380	1	Tape-Heat Shield
19	3234-6	2	Screw-HHF
20	3234-29	4	Screw-HHF
21	3269-4	2	Rivet-Pop
22	99-7122	2	Rivet-Annodized
23	120-9680	4	Washer-Flat
24	33104-020	4	Screw-HHF

Console Assembly

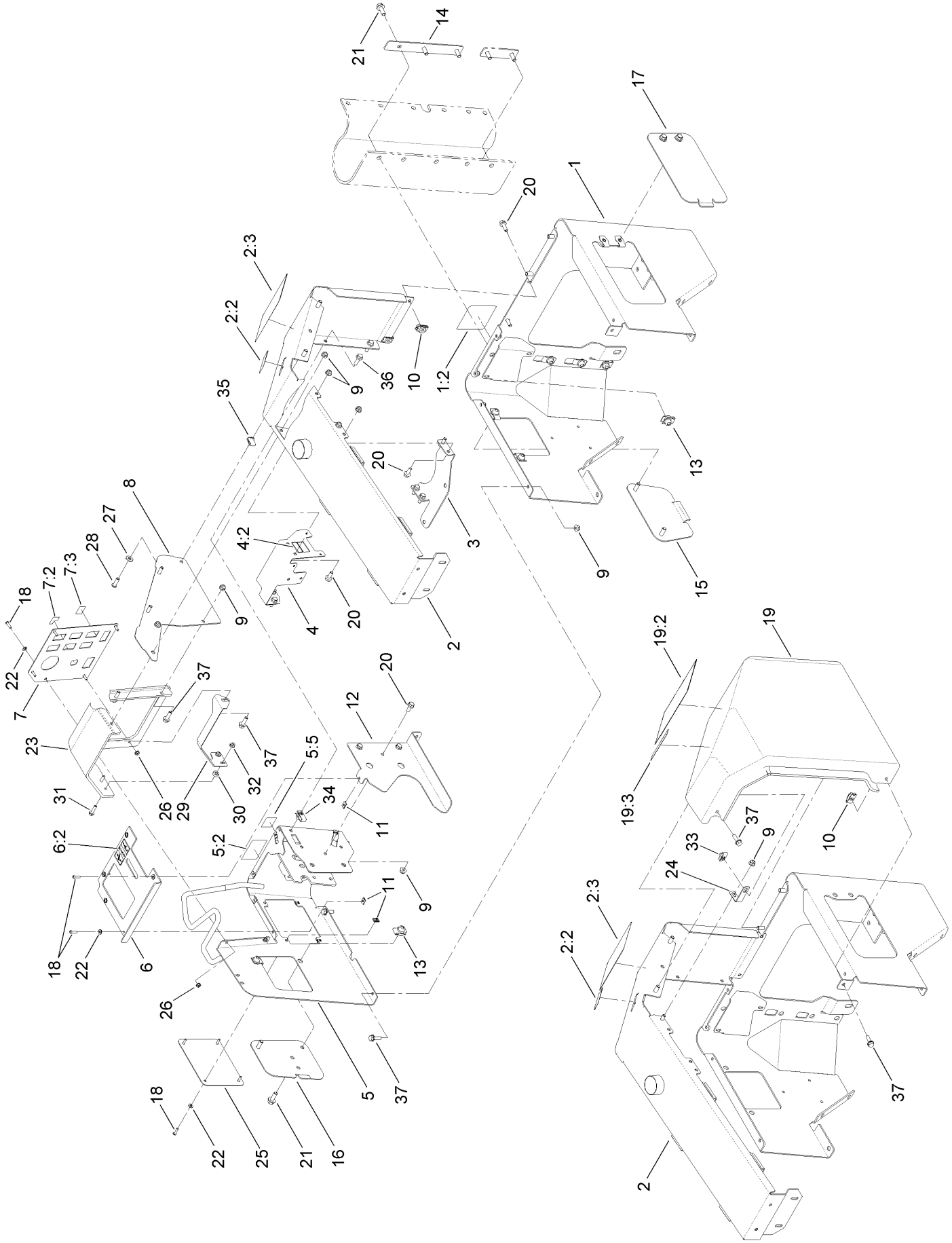

Console Assembly (continued)

Ref.	Part Number	Qty.	Description
1	130-4262	1	Lower Console ASM
1:2	125-8491	1	Decal-Warning, Shield
2	130-4276	1	Center Console ASM
2:2	130-4340	1	Decal-Throttle
2:3	127-1824	1	Decal-Start Up, Shut Down
3	130-4261-03	1	Bracket-Air Cleaner
4	130-4280	1	Relay Bracket ASM
4:2	130-4291	1	Decal-Regen Inhibit
5	130-4263	1	Upper Console ASM
5:2	125-6674	1	Decal-Parking Brake
5:5	125-6680	1	Decal-Ground Drive Control
6	130-4266	1	Top Control Plate ASM
6:2	130-7361	1	Decal-Attachment Lift
7	130-4264	1	Instrument Panel ASM
7:2	130-4341	1	Decal-Ack
7:3	130-7360	1	Decal-Ignition
8	127-6647-01	1	Plate-Controls, Side
9	104-8300	18	Nut-HF, NI
10	CSP11800	3	Nut-Thick, Tinnerman
11	701493	9	Nut-Speed
12	130-4284-03	1	Plate-Tank, HYD
13	105-4886	11	Nut-Tinnerman
14	130-4286-03	1	Plate
15	130-4294-01	1	Cover-Trencher
16	130-4295-01	1	Cover-Selector
17	130-4293-01	1	Cover-Hydraborer
18	104-2408	14	Screw-HSBH
19	130-4342	1	Cover ASM
19:2	130-4343	1	Decal-Safety
19:3	117-2718	1	Decal-Arrester, Spark
20	3234-47	13	Screw-HHF
21	3234-42	11	Screw-HHF
22	3256-77	14	Washer-Flat
23	130-4259	1	Panel-Instrument, Plastic
24	130-7410	1	Bracket-Cover
25	130-7386-01	1	Cover-Trencher
26	32128-17	5	Nut-Lock, Flange
27	105-5769	3	Washer
28	109-4872	3	Screw-HSH
29	130-7408-03	1	Bracket-Support, Instrument
30	115-7073	2	Spacer
31	120-4654	2	Screw-HHF
32	104-7201	2	Nut-HF
33	94-2413	1	Nut-U
34	AU100862	2	Nut-U
35	94-2413	3	Nut-U
36	33104-025	2	Screw-HHF
37	3234-29	9	Screw-HHF

Seat and Rear Frame Assembly

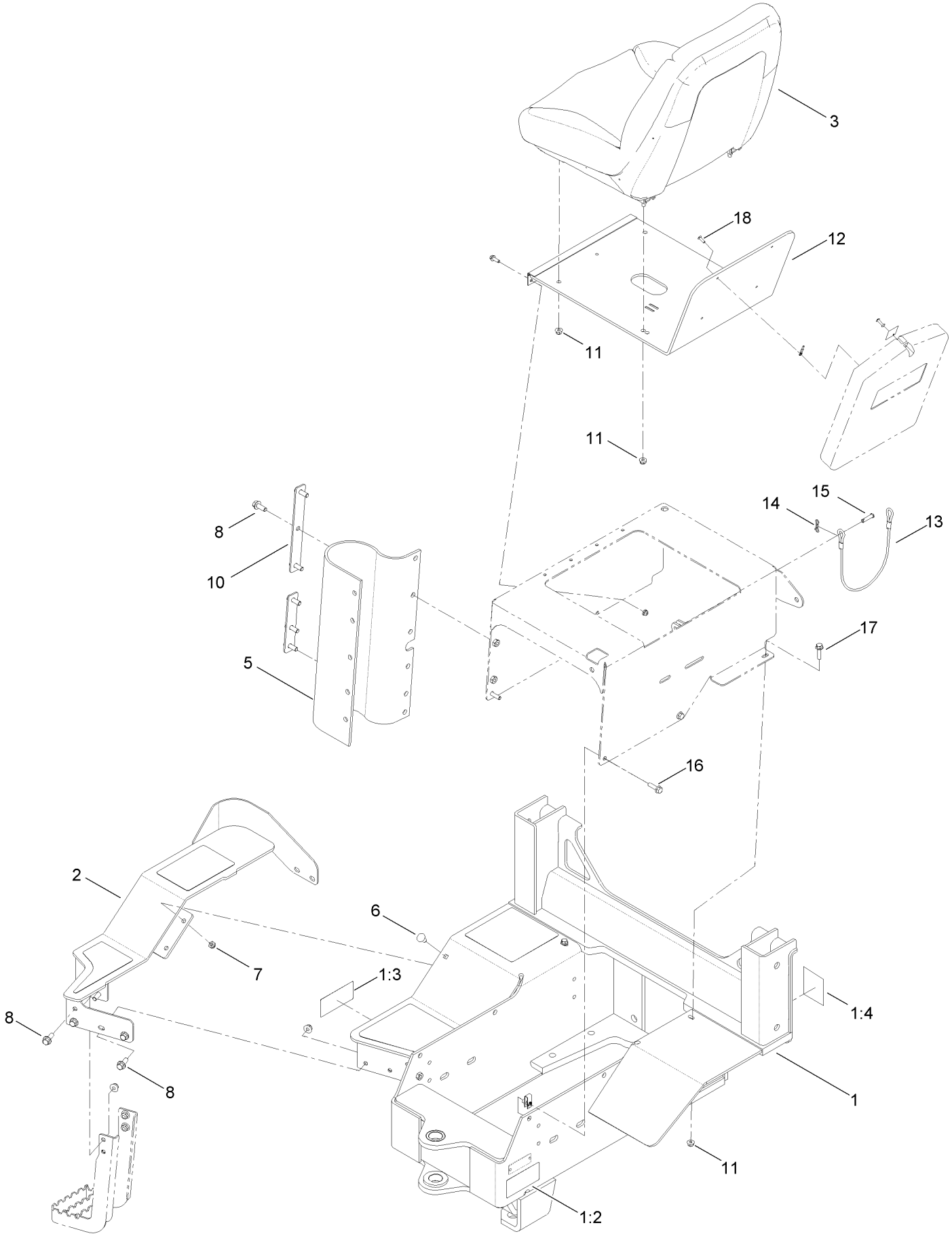

Seat and Rear Frame Assembly (continued)

Ref.	Part Number	Qty.	Description
1	127-6649	1	Rear Frame ASM
1:2	125-6672	1	Decal-Danger, Articulated Joint
1:3	125-8487	1	Decal-Warning, Step Extension
1:4	125-4967	2	Decal-Lift Here
2	130-4281-01	1	Platform-Extension
3	130-4292	1	Seat ASM
5	130-4285	1	Shield-Rubber
6	3231-21	1	Screw-CARR
7	3296-59	1	Nut-Lock, NI
8	3234-42	14	Screw-HHF
10	125-6649-03	1	Plate
11	104-8300	6	Nut-HF, NI
12	131-2114-01	1	Plate-Seat
13	98-4371	1	Cable-Seat
14	119-1415	2	Pin-Cotter, Locking
15	283-6	2	Pin-Clevis
16	33104-030	4	Screw-HHF
17	3234-36	2	Screw-HHF
18	3269-11	4	Rivet-Pop

Drive Assembly

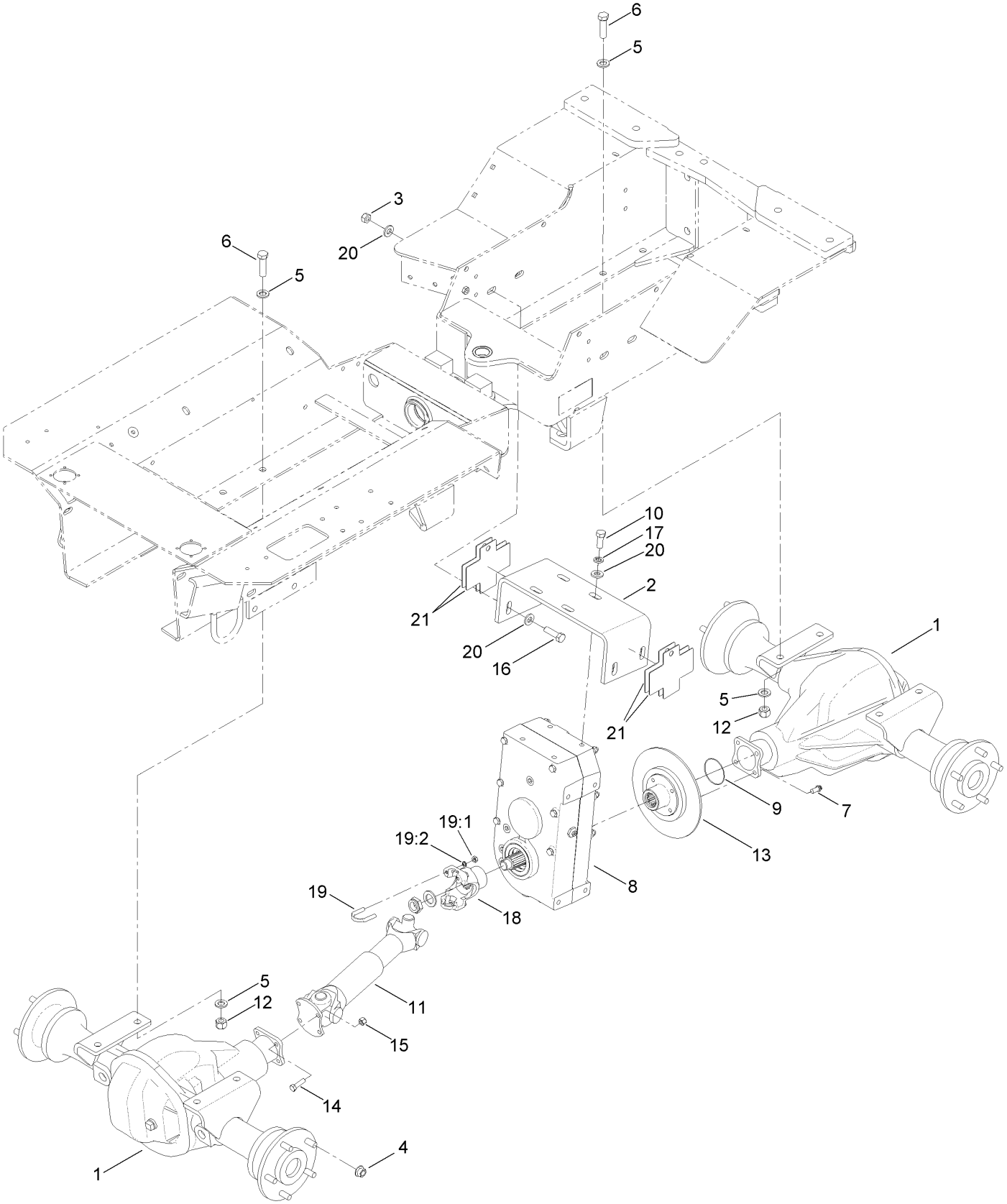

Drive Assembly (continued)

Ref.	Part Number	Qty.	Description
1	AU110858A1-03	2	Axle-Drive
2	127-1093-03	1	Bracket-Mounting
3	97-1206	4	Locknut
4	AU131-918	20	Nut
5	AU896-11014	16	Washer-Flat
6	AU426-932	8	Bolt
7	AU79-1612	4	Screw-12 Pt Flange
8	AU104951	1	Transmission ASM
9	AU238-5036	1	O-Ring, SAE
10	325-5	4	Screw-HH
11	AU111086A1	1	Drive Shaft ASM
12	AU232-4119	8	Nut-Hex
13	AU87403381	1	Flange-Companion
14	3211-5	4	Screw-HH
15	AU232-4616	4	Nut-Hex
16	325-7	4	Screw-HH
17	3253-7	4	Washer-Lock
18	AU131687A1	1	Yoke-Transmission
19	AUH183566	1	Bolt-U (2 Per Pack)
19:1	3219-2	2	Nut-Hex
19:2	3253-4	2	Washer-Lock
20	AUH274894	12	Washer
21	127-1094-03	7	Shim-Bracket

Drive Axle Assembly No. AU110858A1-03

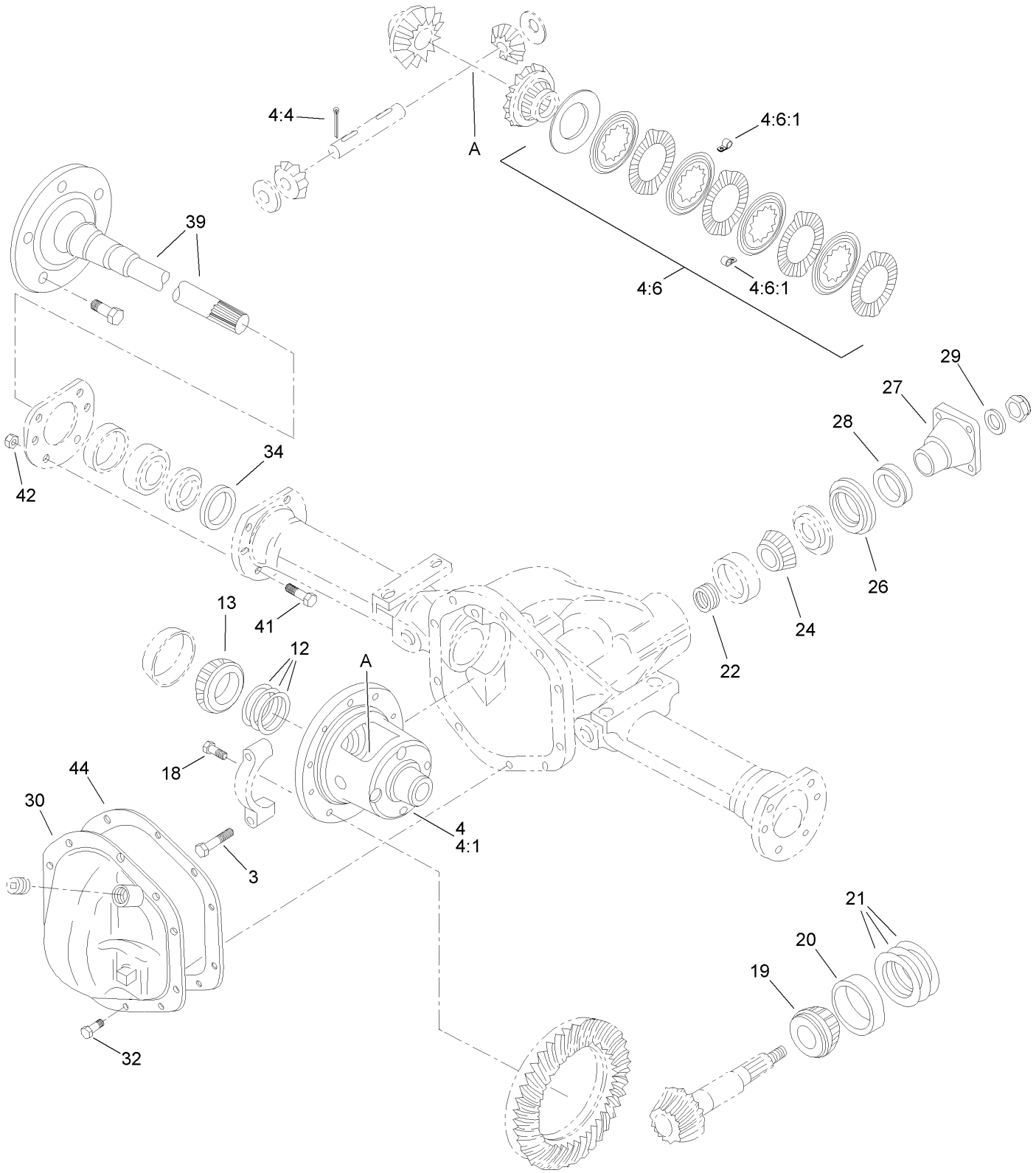

Drive Axle Assembly No. AU110858A1-03 (continued)

Ref.	Part Number	Qty.	Description
3	AU413-836	4	Bolt
4	AU100862A1	1	Case ASM
4:1	AU100863A1	1	Case
4:4	AU38-11624	1	Pin-Spring, Slotted
4:5	AUH226746	2	Washer ●
4:6	AUH572370	1	Differential Disc Kit (Matched Set)
4:6:1	AUH226753	4	Clip
12	AUH198283	1	Shim
12	AUH198275	1	Shim
12	AUH198267	1	Shim
12	AUH198259	1	Shim
13	AU300426R91	2	Bearing-Taper
18	AU117383A1	10	Bolt
19	AU128241R91	1	Bearing-Taper
20	AU128242R1	1	Cup-Bearing
21	AUH198150	1	Shim
21	AUH198168	1	Shim
21	AUH198176	1	Shim
22	AUH198044	1	Shim
22	AUH198010	1	Shim
22	AUH198036	1	Shim
22	AUH198028	1	Shim
24	AU128239R91	1	Bearing-Taper
26	AUN8427	1	Seal
27	AUH197582	1	End-Yoke
28	AUH196998	1	Slinger
29	AUH197574	1	Washer
30	AUN8428	1	Cover
32	AUH226555	10	Bolt
34	AUH198093	2	Seal
39	AU252266A1	2	Shaft
41	AUH263103	8	Bolt
42	AU232-4616	8	Nut-Hex
43	AUH384453	1	Baffle-Oil ●
44	AUM20704	1	Maker-Gasket

● Not illustrated

Transmission Assembly No. AU104951

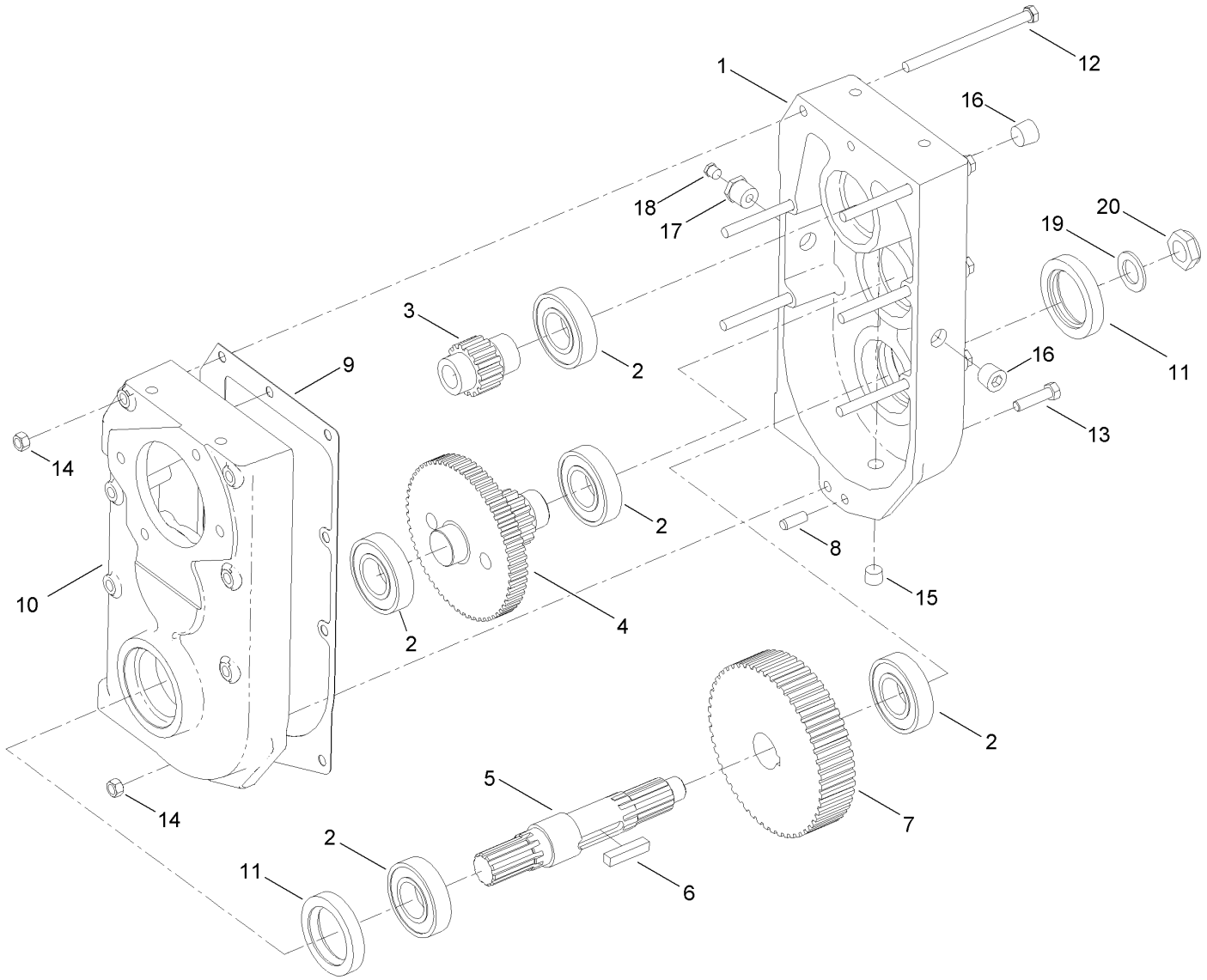

Transmission Assembly No. AU104951 (continued)

Ref.	Part Number	Qty.	Description
1	AU104545	1	Case-Gear
2	AUA26581	5	Bearing
3	AUH253112	1	Gear-Motor, 18 Teeth
4	AUH253153	1	Gear-Cluster, 59/15 Teeth
5	AUH253138	1	Shaft-Output
6	AUH70045	1	Key-Square
7	AUH253146	1	Gear-Reduction, 51 Teeth
8	AUH755272	2	Pin-Dowel
9	AUH413153	1	Gasket
10	AU104546	1	Case-Gear
11	AUH754226	2	Seal-Oil
12	AU426-688	6	Screw-HH
13	323-43	1	Screw-HH
14	603773	7	Locknut
15	97-2206	1	Fitting-HYD
16	AU217-439	5	Plug-Pipe, Hex Socket
17	AU221-87	1	Fitting-Straight
18	AUR11152	1	Vent
19	AUH224501	1	Washer
20	3296-60	1	Nut-Lock, NI

Drive Shaft Assembly No. AU111086A1

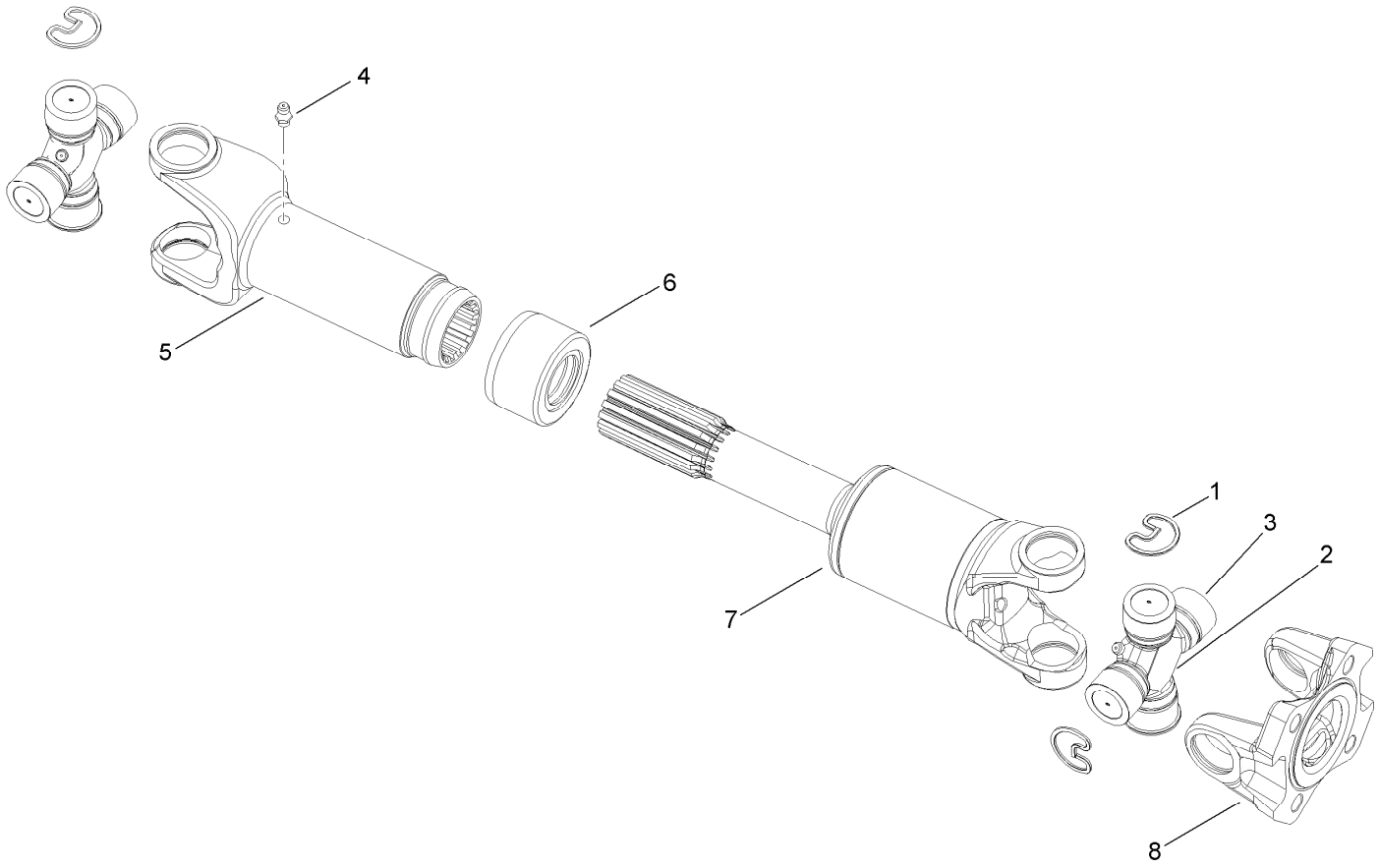

Drive Shaft Assembly No. AU111086A1 (continued)

Ref.	Part Number	Qty.	Description
1	AU11256	6	Ring-Retaining
2		2	Journal ●
3		8	Cup-Bearing ●
4	AU219-10	1	Fitting-Lube
5	AU102834A1	1	Yoke
6	AU230556A1	1	Seal
7		1	Shaft ●
8	AUH251777	1	Flange

● Not serviced separately

Ground Drive Control Assembly

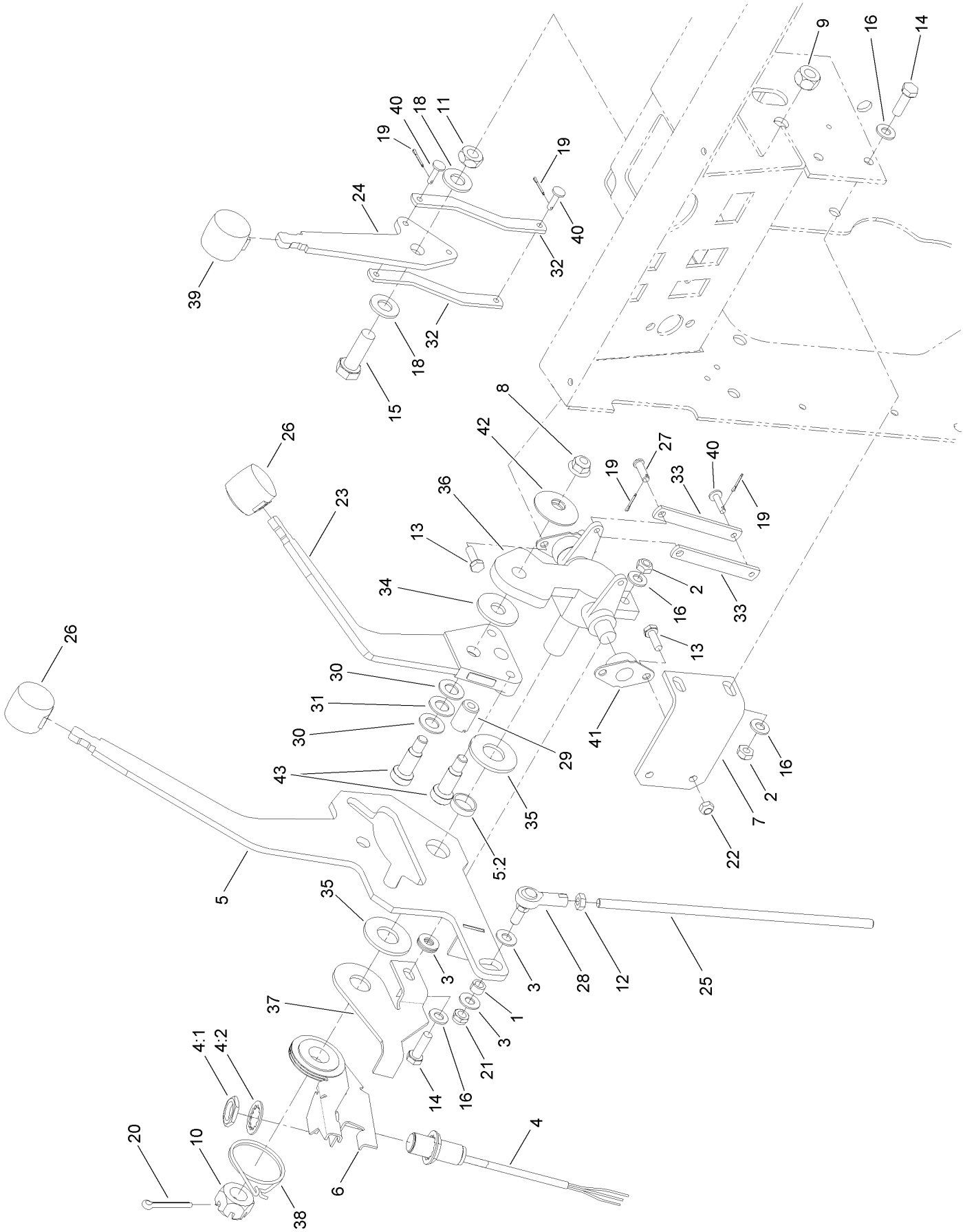

Ground Drive Control Assembly (continued)

Ref.	Part Number	Qty.	Description
1	1-603500	1	Spacer
2	97-1203	3	Nut-Hex
3	107-0279	5	Washer
4	115-5300	1	Proximity Switch ASM
4:1	117-3207	2	Nut-Hex
4:2	117-3208	2	Washer-Lock, Internal Tooth
5	125-6643	1	Handle ASM
5:2	AUH433184	1	Bearing-Handle
6	130-7376	1	Mounting ASM
7	125-8539-03	1	Angle-Mounting
8	32128-19	1	Nut-HF
9	AU230-4218	1	Nut-Hex
10	AU425-1212	1	Nut-Slotted, Hex
11	AU425-148	1	Nut-Jam
12	3220-2	1	Nut-Jam
13	AU426-412	4	Bolt
14	AU426-516	3	Screw-HH
15	AU426-824	1	Screw-HH
16	3256-23	6	Washer-Plain
18	3256-26	2	Washer-Flat
19	3272-1	4	Pin-Cotter
20	3272-23	1	Pin-Cotter
21	3296-20	1	Nut-Lock, NI
22	146375	4	Nut-Lock, Cone
23	AU105258-03	1	Handle-Creep
24	AU105259-03	1	Handle-Plow
25	131-2134	1	Rod Control
26	AUA177435	2	Knob
27	9321204	1	Pin-Clevis
28	AUH289652	1	Joint-Ball (Female)
29	AUH404731	1	Ball-Plunger
30	AUH405035	2	Race-Thrust
31	AUH405043	1	Bearing-Thrust (Needle)
32	AUH423046-03	2	Link-Valve, Control
33	AUH423053-03	2	Link-Valve, Steering
34	AUH429894	1	Washer-Friction
35	AUH433170	2	Washer-Spacer
36	AUH435855	1	Pivot-Control, Steering
37	AUH436230-03	1	Plate-Centering
38	AUH436231	1	Spring-Centering
39	AUH438223	1	Knob-Green
40	AUH44529	3	Pin-Clevis
41	AUH755785	2	Bearing
42	AUR14771	1	Washer-Belleville
43	1-603403	3	Bolt-Shoulder

Neutral Switch Mounting Assembly No. 130-7376

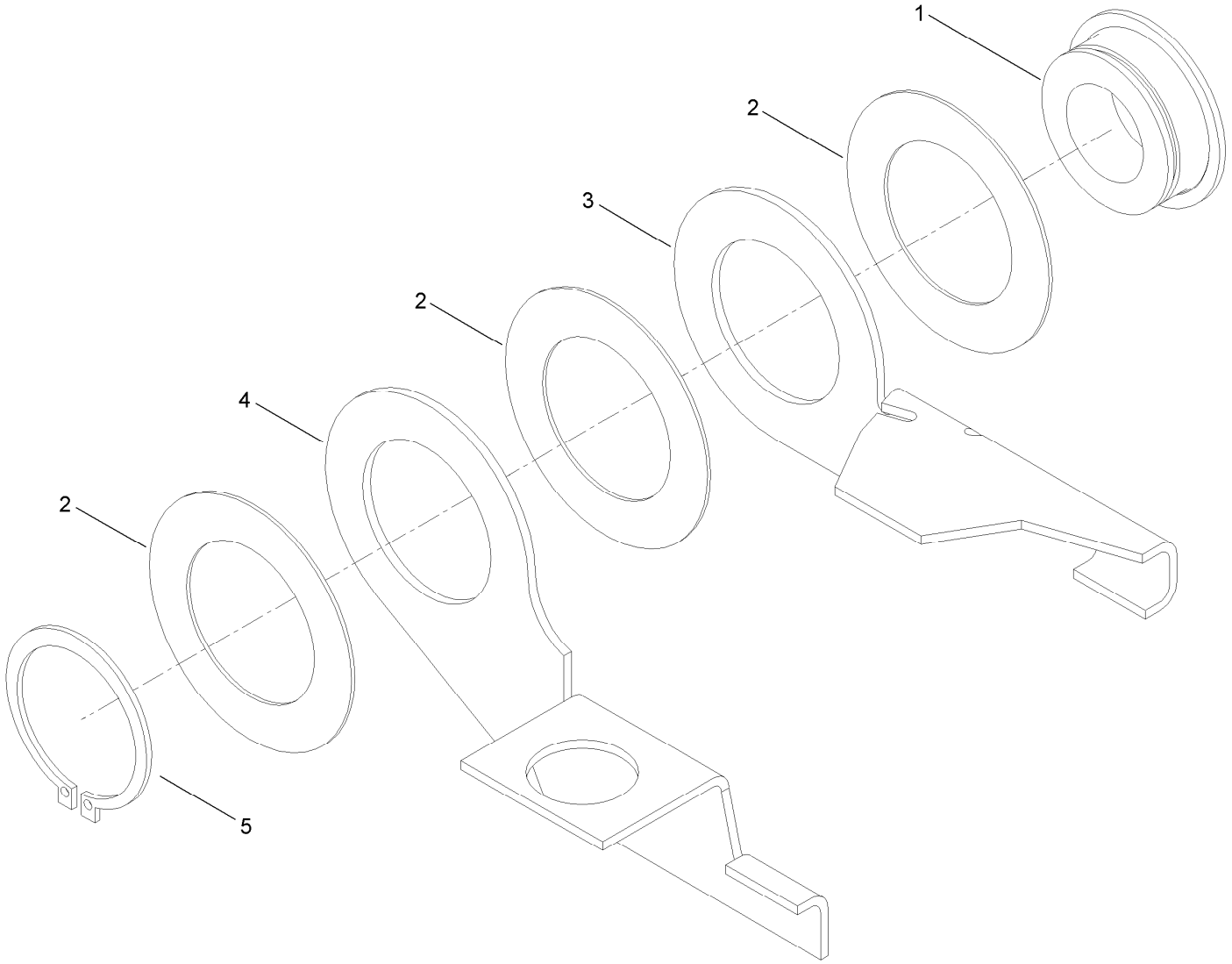

Neutral Switch Mounting Assembly No. 130-7376 (continued)

Ref.	Part Number	Qty.	Description
1	AU131050A1	1	Hub
2	AUH257915	3	Shim
3	125-6644	1	Plate-Mounting, Switch
4	125-6645	1	Plate-Mounting, Switch
5	AU103-11125	1	Ring-Retaining

Ground Drive Spring Assembly

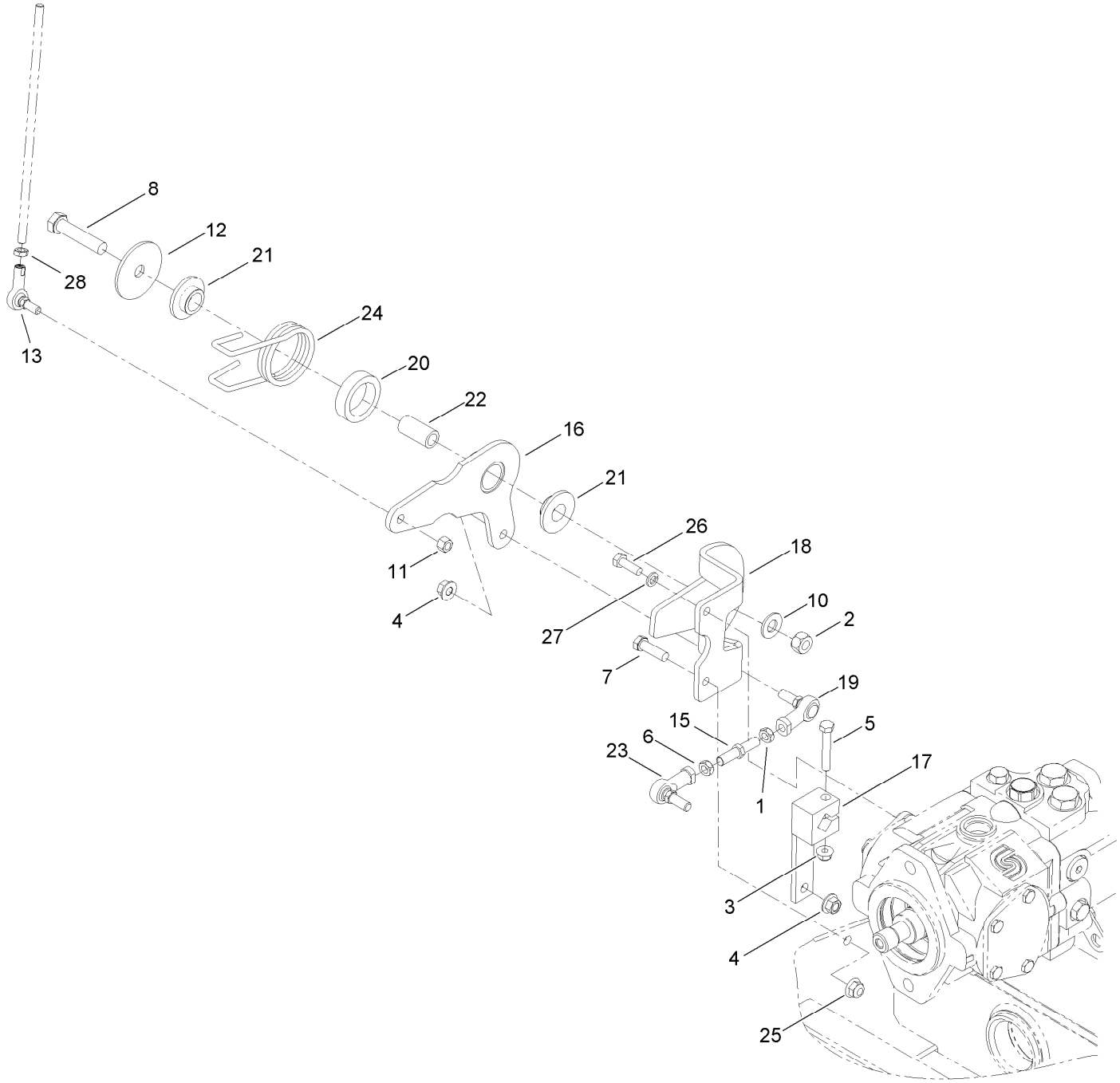

Ground Drive Spring Assembly (continued)

Ref.	Part Number	Qty.	Description
1	AU129-289	1	Nut-Jam, LH
2	AU230-4218	1	Nut-Hex
3	104-8300	1	Nut-HF, NI
4	127-6852	2	Nut-Flange, Lock
5	322-10	1	Screw-HH
6	AU425-156	1	Nut-Jam, Hex
7	AU426-620	2	Bolt
8	AU426-840	1	Screw-HH
10	3256-26	1	Washer-Flat
11	32152-5	1	Nut-Hex
12	AU131967A1	1	Washer-Flat (Special)
13	AU103404	1	Joint-Ball, LH (Female)
15	AU107344	1	Screw-Jack, Control
16	131-2132-03	1	Plate-Linkage
17	131-2119-03	1	Lever-Control, Pump
18	131-2130-03	1	Plate-Pump
19	AU139830A1	1	Joint-Ball, Stud (Rod End)
20	AU175086A1	1	Spacer-Collar
21	AUD128616	2	Bushing-Insert, Plastic
22	AUH435694	1	Spacer
23	AUR47940	1	Joint-Ball
24	AUH436303	1	Spring
25	104-8301	2	Nut-HF, NI
26	AU100873	2	Screw-HH
27	3253-4	2	Washer-Lock
28	3220-20	1	Nut-Jam

Seat Belt Assembly

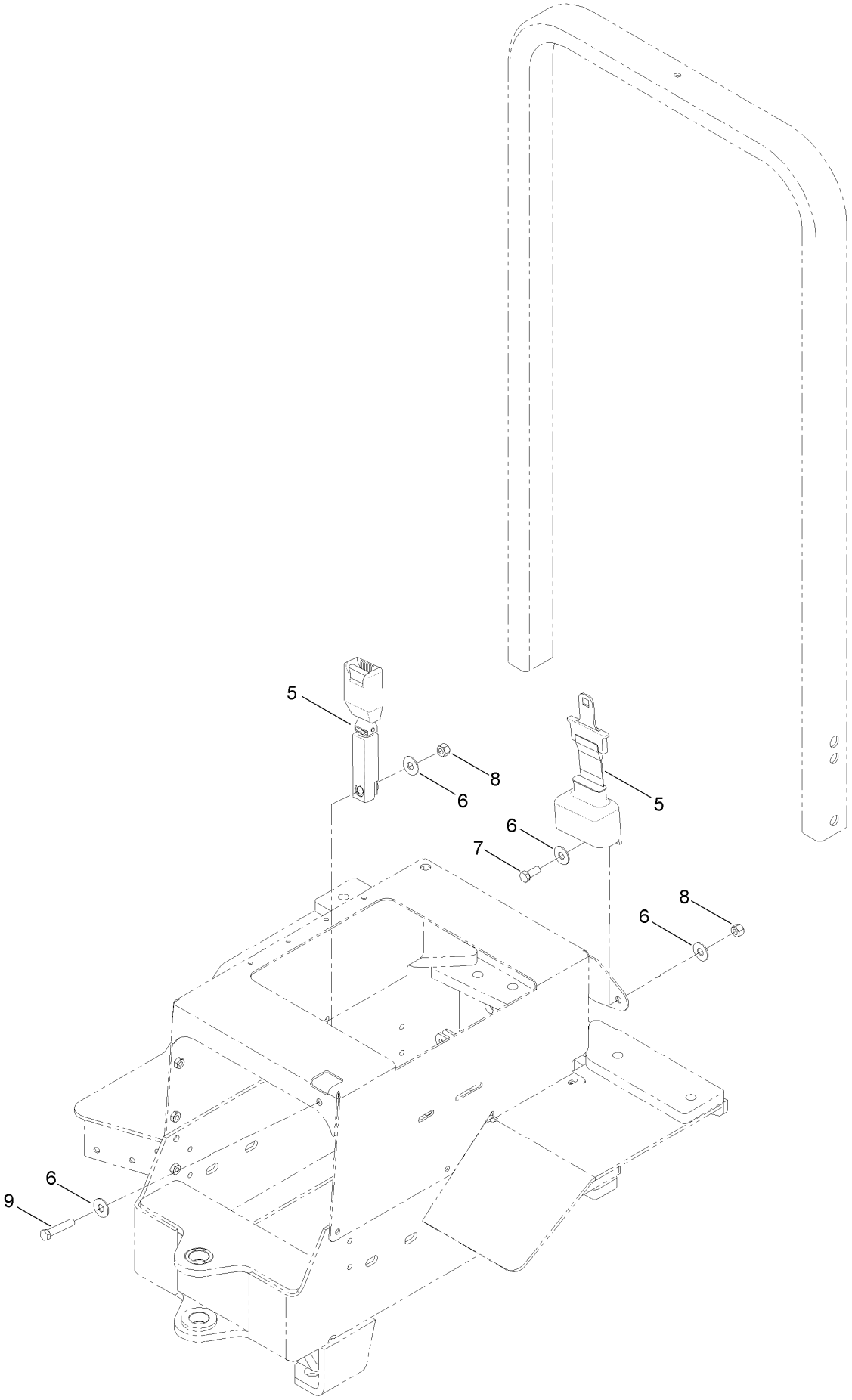

Seat Belt Assembly (continued)

Ref.	Part Number	Qty.	Description
5	AU249116A1	1	Seat Belt ASM
6	3256-5	4	Washer-Flat
7	AU428-716	1	Screw-HH
8	AU232-4617	2	Nut-Hex
9	AU428-736	1	Screw-HH

Roll-Over Protection System Assembly

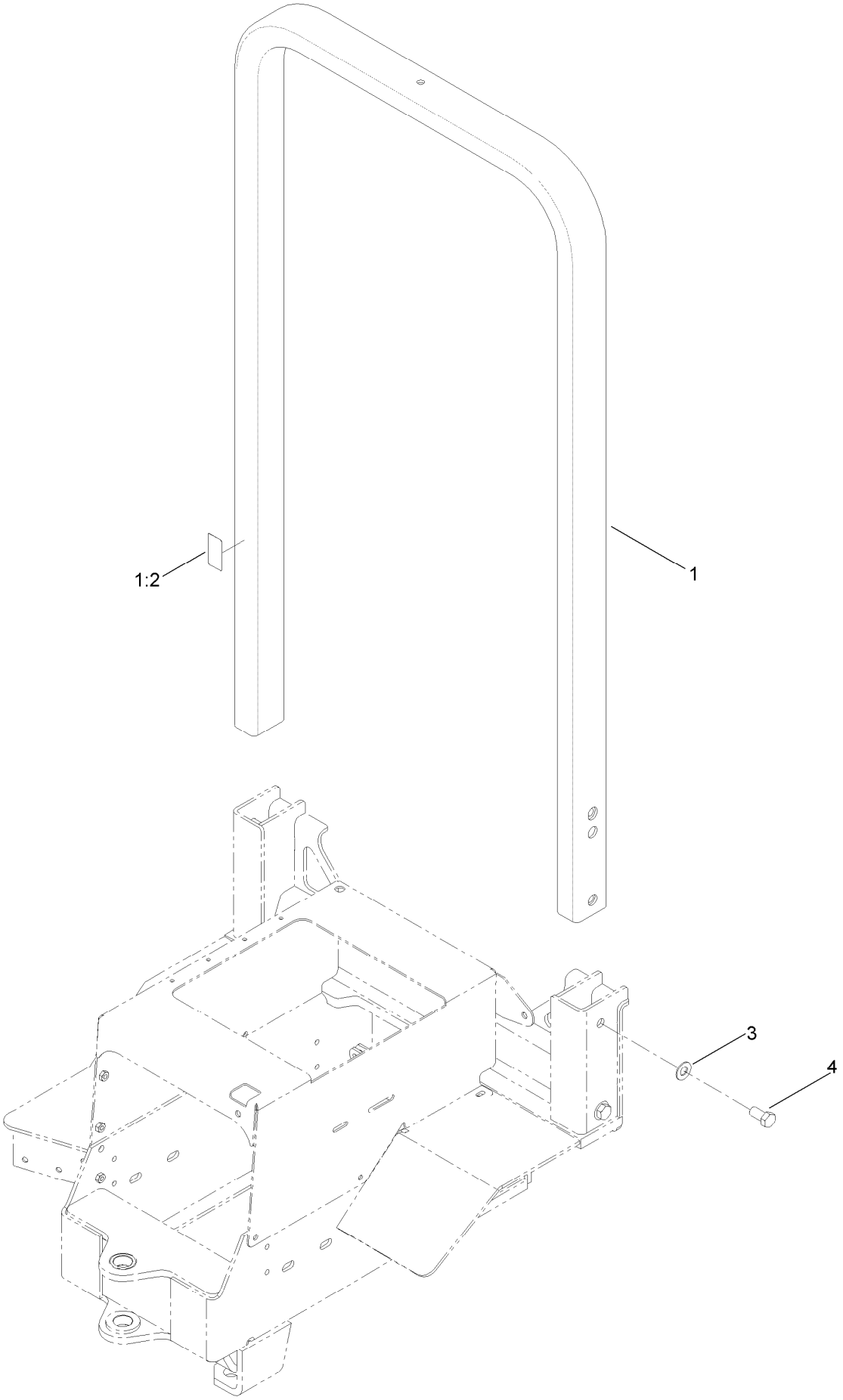

Roll-Over Protection System Assembly (continued)

Ref.	Part Number	Qty.	Description
1	130-4268	1	ROPS ASM
1:2	130-4338	1	Decal-ROPS
3	3256-27	4	Washer-Flat
4	327-3	4	Screw-HH

Brake Assembly

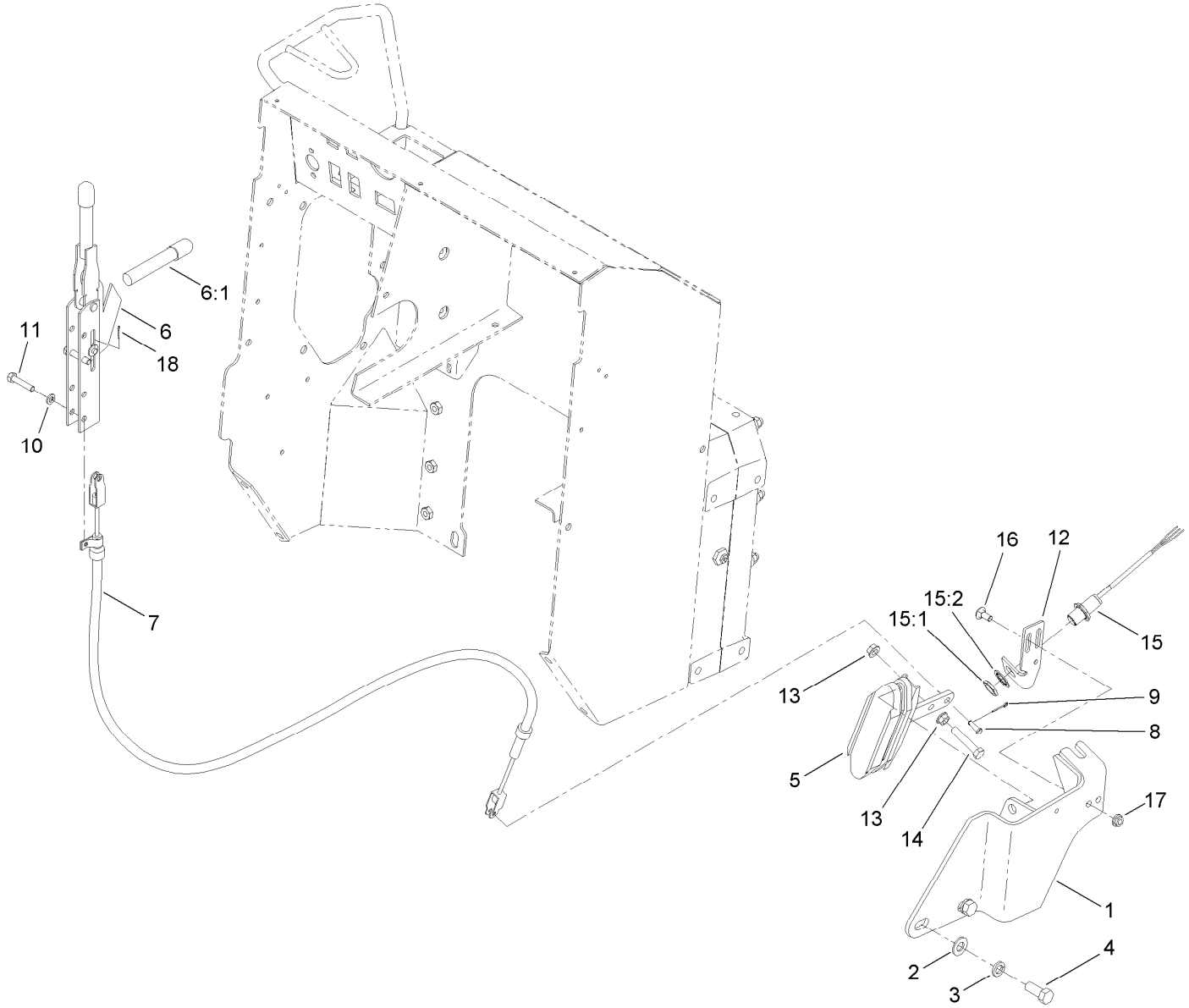

Brake Assembly (continued)

Ref.	Part Number	Qty.	Description
1	125-8534-03	1	Bracket-Brake
2	3256-26	2	Washer-Flat
3	3253-7	2	Washer-Lock
4	325-5	2	Screw-HH
5	AUH673926	1	Caliper ASM
6	AUH506881	1	Lever-Brake
6:1	AUH53942	1	Spacer
7	AU119124A2	1	Cable-Brake
8	9321204	1	Pin-Clevis
9	3272-2	1	Pin-Cotter
10	3253-4	2	Washer-Lock
11	5-1470	2	Screw-HH
12	125-8536-03	1	Bracket-Sensor
13	3290-357	2	Nut-HHF, Whiz
14	323-32	1	Screw-HH
15	115-0282	1	Proximity Sensor ASM
15:1	117-3207	2	Nut-Hex
15:2	117-3208	2	Washer-Lock, Internal Tooth
16	3230-1	2	Bolt-CARR
17	32128-20	2	Nut-HF
18	3272-1	1	Pin-Cotter

Brake Caliper Assembly No. AUH673926

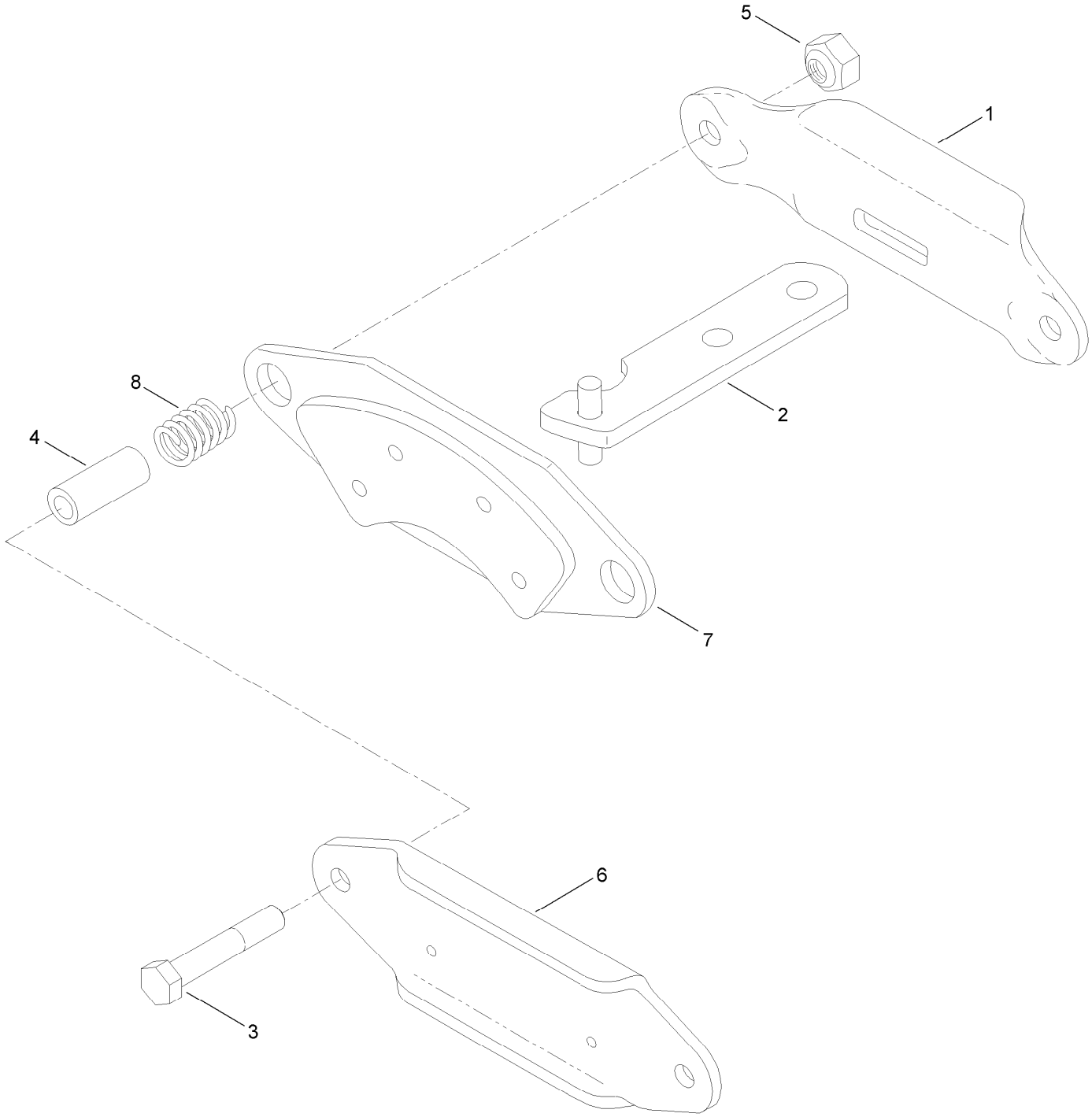

Brake Caliper Assembly No. AUH673926 (continued)

Ref.	Part Number	Qty.	Description
1	AUH437100	1	Bracket
2	AUH437101	1	Lever
3	AU414-536	2	Screw-Cap
4	AU119417	2	Spacer-Tube
5	AU230-4715	2	Nut
6	AUH437104	1	Outside Holder And Pad ASM
7	AUH437102	1	Inside Holder And Pad ASM
8	AUH437103	2	Spring

Shroud Assembly

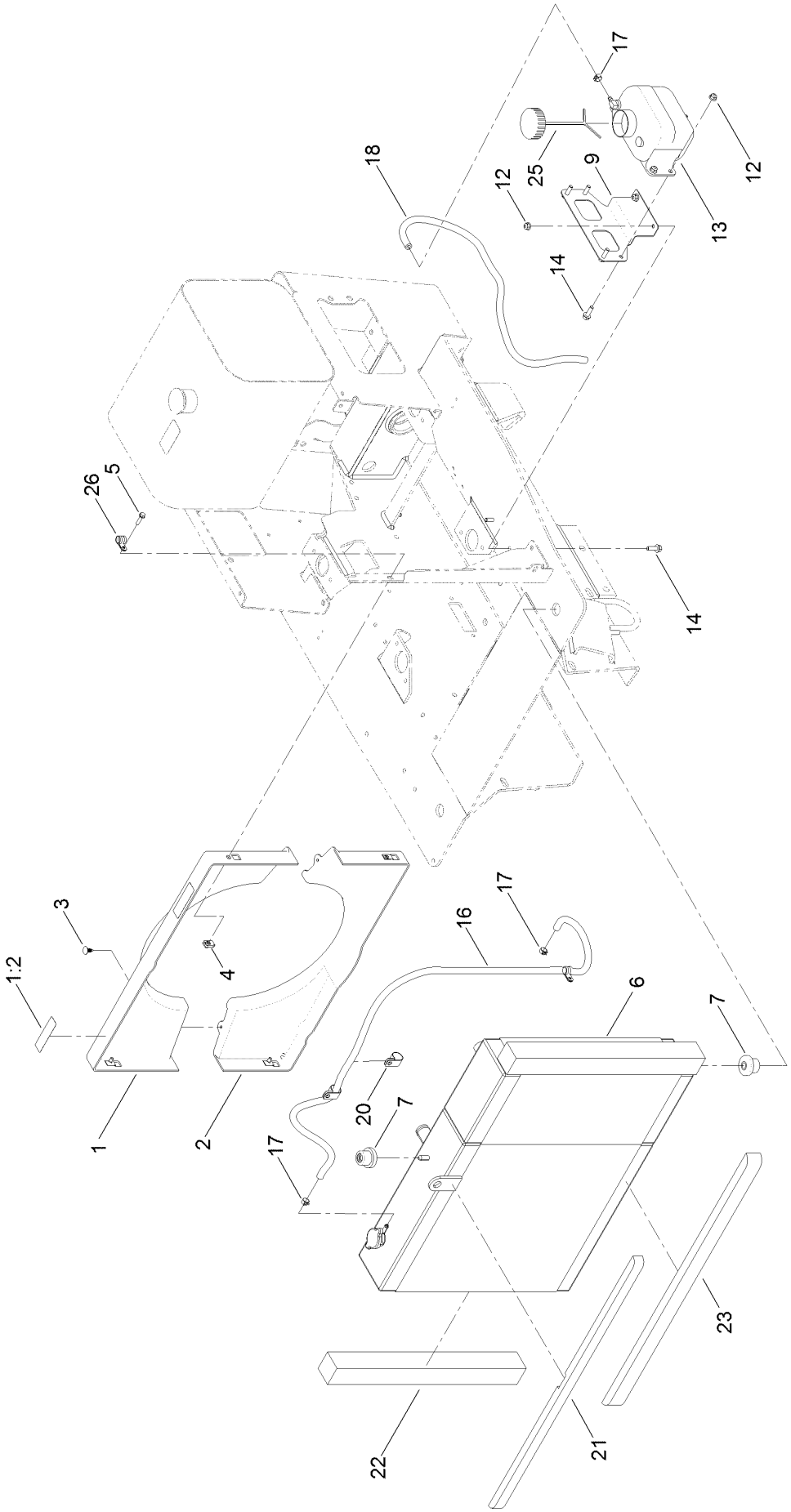

Shroud Assembly (continued)

Ref.	Part Number	Qty.	Description
1	130-7447	1	Fan Shroud ASM
1:2	120-0627	2	Decal-Warning
2	121-3311	1	Shroud-Bottom
3	117-2382	2	Plug-Plastic
4	107069	4	Clip
5	120-4654	4	Screw-HHF
6	127-6581	1	Cooling ASM
7	119-1422	3	Mount-Isolator
9	127-6608-03	1	Bracket-Tank
12	104-8300	6	Nut-HF, NI
13	AU138189A1	1	Tank-Recovery, Coolant

Ref.	Part Number	Qty.	Description
14	3234-29	6	Screw-HHF
16	110-3259	1	Hose-Fuel
17	92-2379	3	Clamp-Hose
18	110-6186	1	Hose-Fuel
20	2412-41	2	Clamp-R
21	130-4334	1	Seal-Foam
22	130-4335	2	Seal-Foam
23	130-4336	1	Seal-Foam
25	87-7050	1	Cap-Reservoir
26	2412-134	2	Clamp-R

Engine Assembly

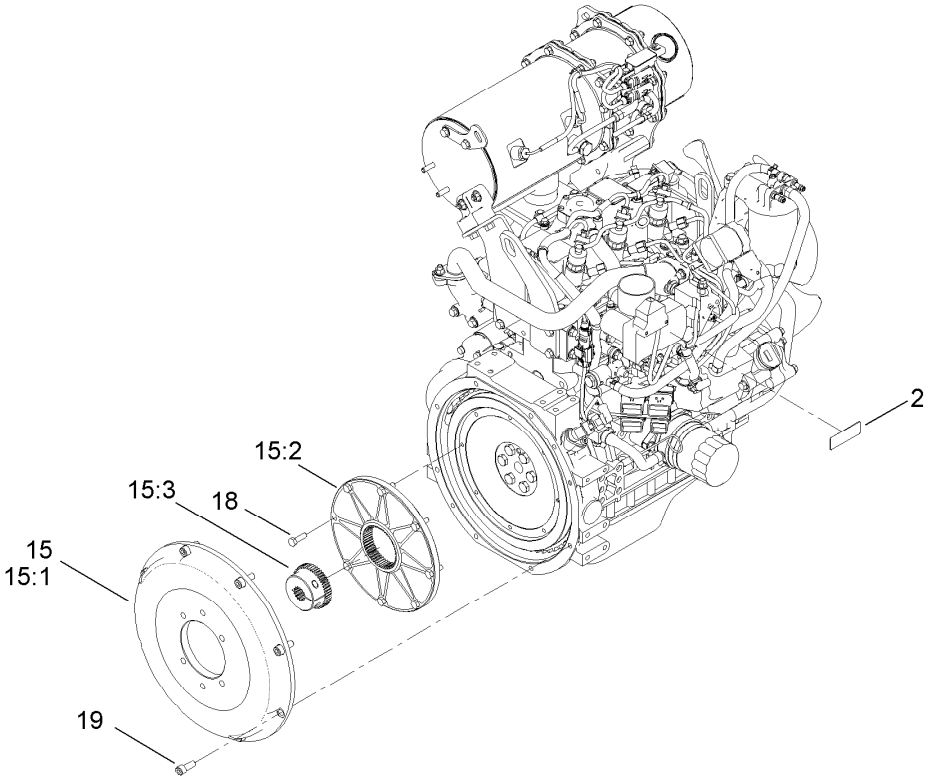

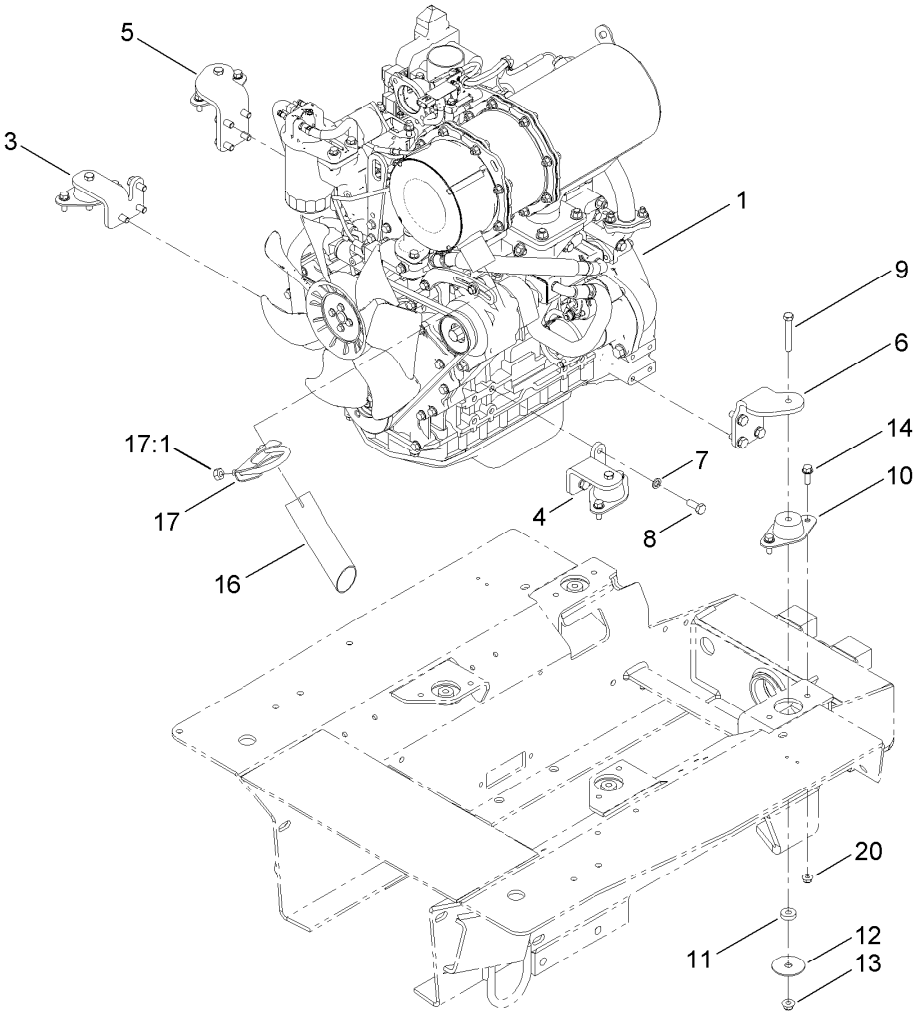

Engine Assembly (continued)

Ref.	Part Number	Qty.	Description
1	138-6924	1	Engine-Yanmar
2	125-6688	1	Decal-Danger, Starter Fluid
3	120-3780-03	1	Mount-Engine, Left Rear
4	120-3779-03	1	Mount-Engine, Right Rear
5	127-6583-03	1	Mount-Engine, Right Rear
6	127-6584-03	1	Mount-Engine, Left Rear
7	48-9590	14	Washer-Lock
8	33115-025	14	Screw-HH
9	323-12	4	Screw-HH
10	120-6274	4	Mount-Engine
11	62-6660	4	Spacer
12	87-5100	4	Washer-Snubbing

Ref.	Part Number	Qty.	Description
13	104-8301	4	Nut-HF, NI
14	3234-29	8	Screw-HHF
15	127-6632	1	Drive Coupler Kit
15:1	127-6605	1	Plate-Mounting, Pump
15:2	127-6607	1	Flange-Flywheel
15:3	127-6606	1	Hub
16	130-4288	1	Tube-Exhaust
17	2112-6	1	Clamp-Muffler
17:1	3218-2	2	Nut-Jam
18	33114-025	8	Screw-HH
19	3273-41	8	Screw-HSH
20	104-8300	8	Nut-HF, NI

Air Cleaner and Radiator Hose Assembly

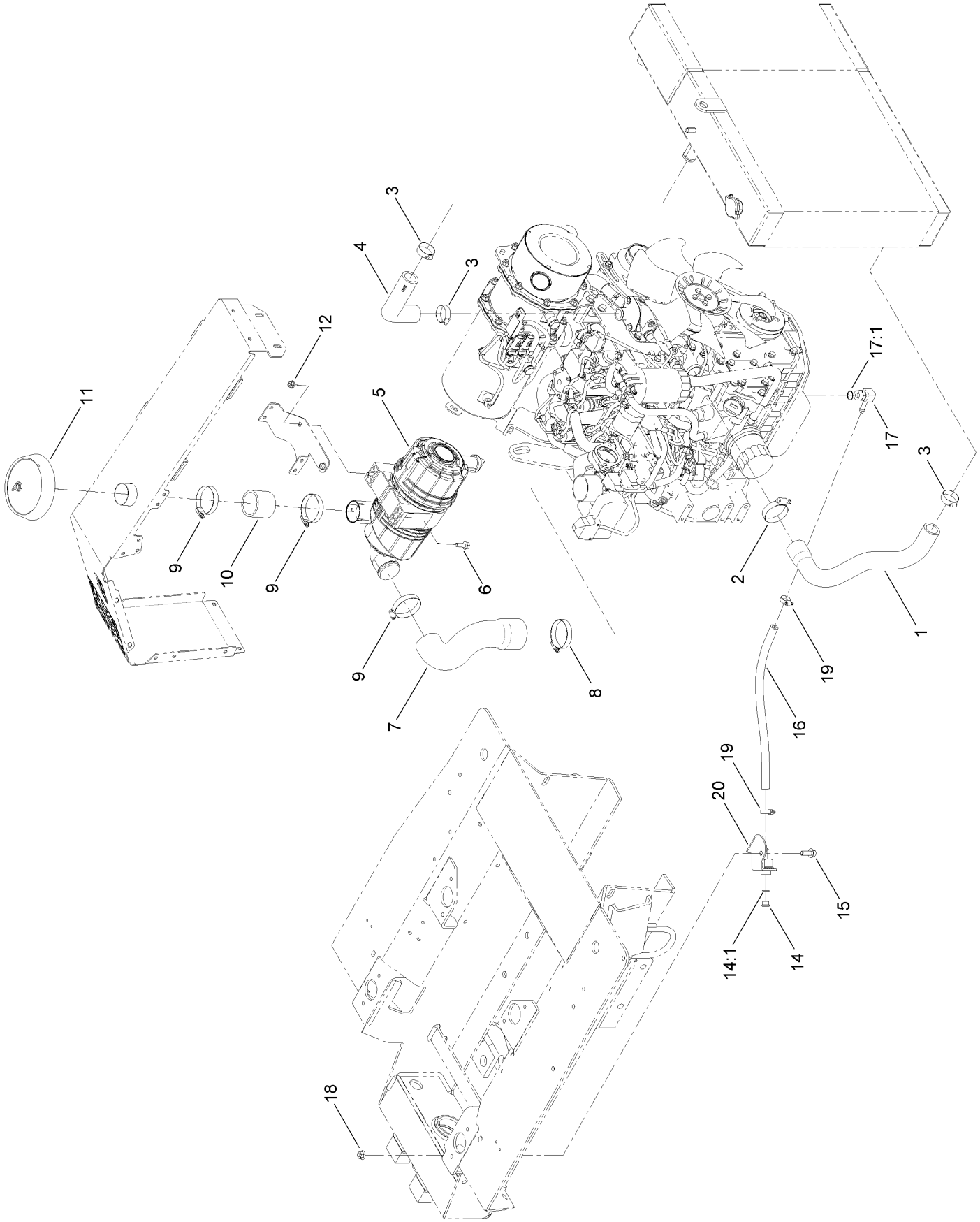

Air Cleaner and Radiator Hose Assembly (continued)

Ref.	Part Number	Qty.	Description
1	121-3322	1	Hose-Radiator, Lower
2	2412-92	1	Clamp-Hose
3	2412-34	3	Clamp-Hose
4	121-3321	1	Hose-Radiator, Upper
5	127-6617	1	Air Cleaner ASM
6	3234-29	2	Screw-HHF
7	127-6609	1	Hose-Air
8	2412-42	1	Clamp-Hose
9	2412-130	3	Clamp-Hose
10	130-4329	1	Hose-Air Inlet
11	AU104635	1	Hood-Rain
12	104-8300	2	Nut-HF, NI
14	353-989	1	Plug-Hex, Hollow
14:1	237-42	1	O-Ring
15	3234-42	1	Screw-HHF
16	121-7488	1	Hose-HYD
17	112-2404	1	Fitting-Barbed-90
17:1	112-2525	1	Washer-Seal, Bonded
18	119-4042	1	Nut-HF, NI
19	2412-36	2	Clamp-Hose
20	131-2101	1	Oil Plug ASM

Air Filter Assembly No. 127-6617

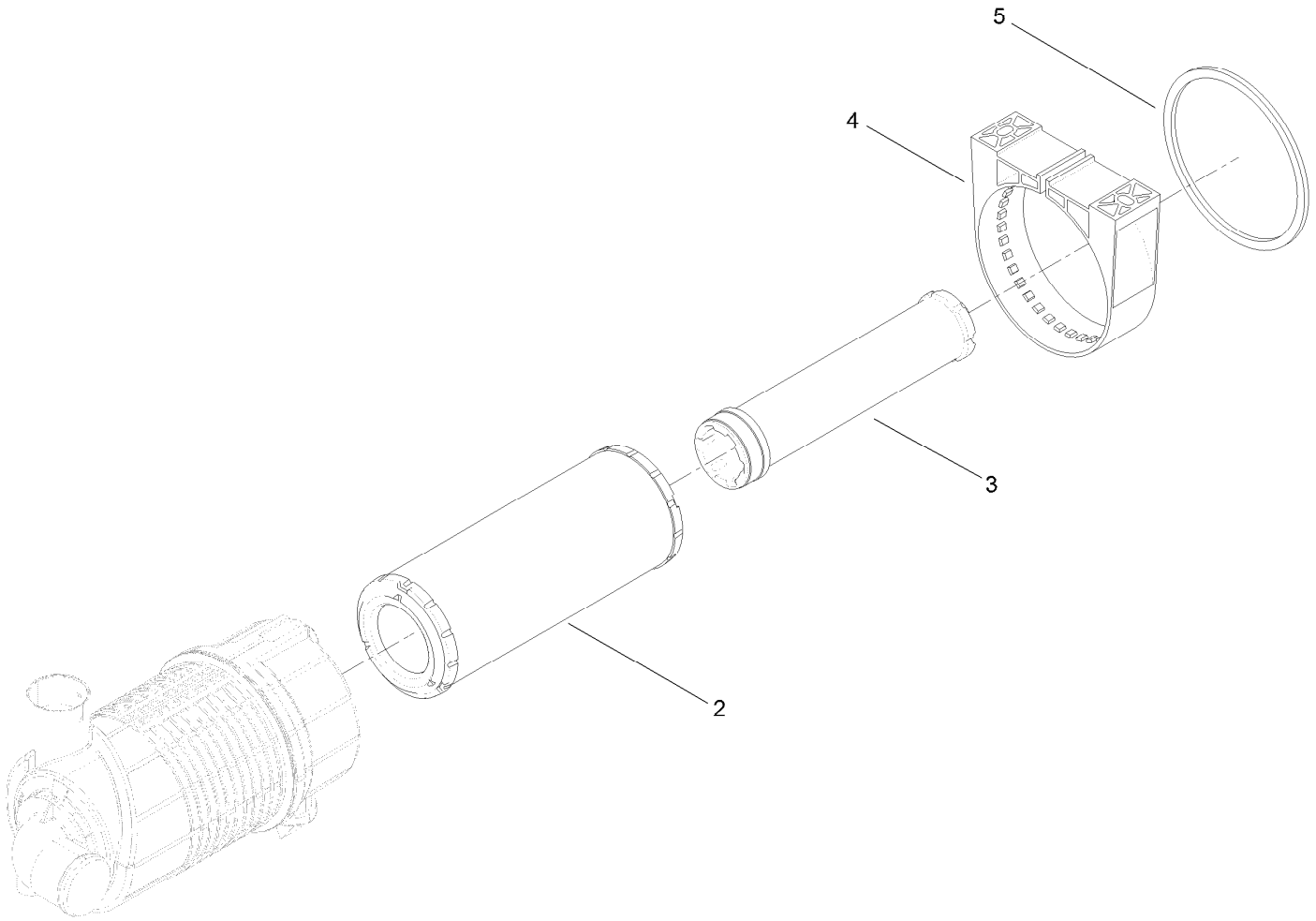

Air Filter Assembly No. 127-6617 (continued)

Ref.	Part Number	Qty.	Description
2	108-3810	1	Filter-Air
3	114-4057	1	Element-Safety
4	98-4525	1	Bracket-Cleaner, Air
5	104-4897	1	Gasket

Electrical Assembly

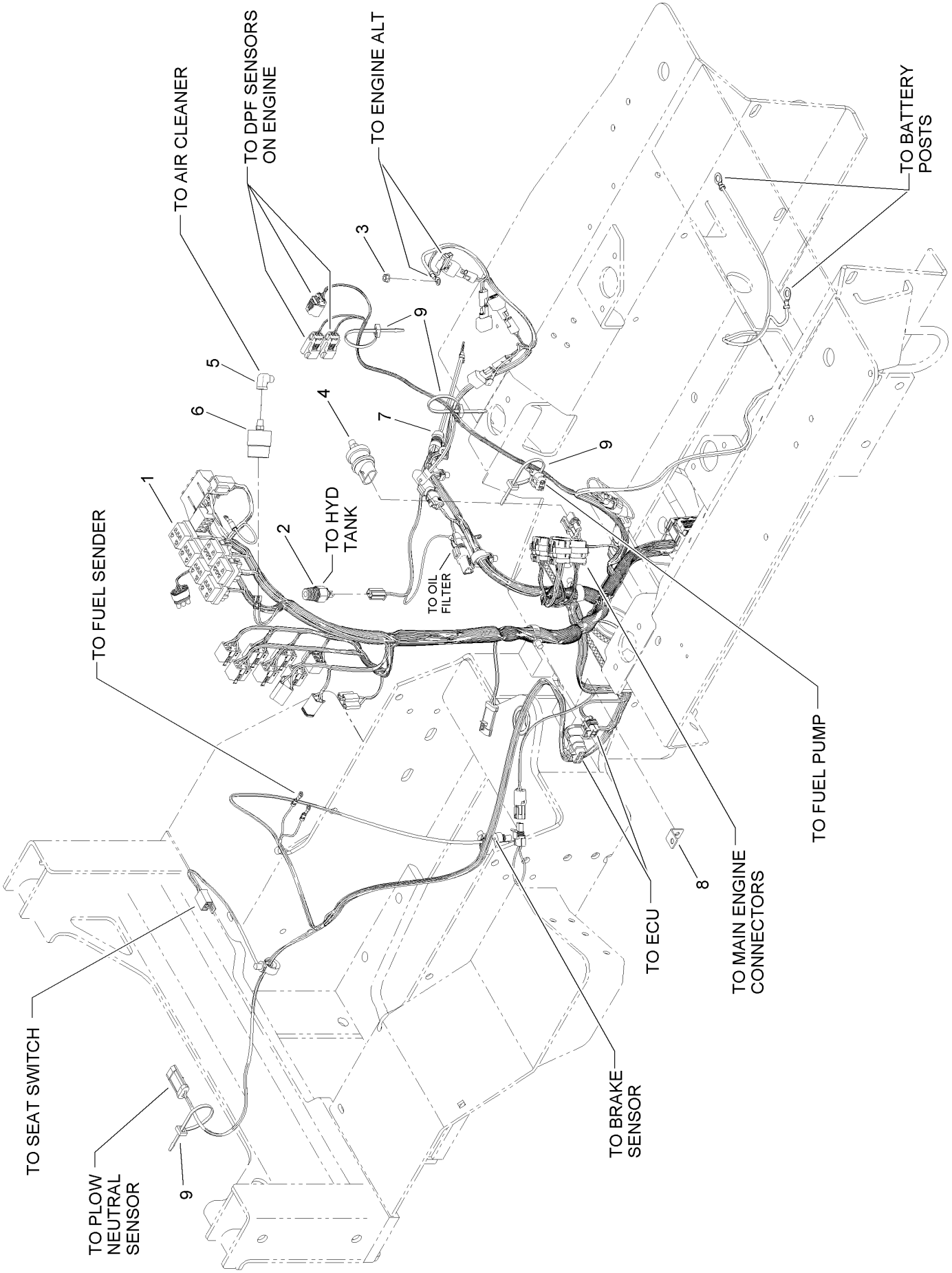

Electrical Assembly (continued)

Ref.	Part Number	Qty.	Description
1	122-0128	1	Harness-Wire
2	121-6599	1	Switch-Temp, 200 Degree
3	33003-00	1	Nut-HF
4	125-8509	1	Switch-Pressure, Oil
5	2811-7	1	Elbow
6	AU292950A1	1	Switch-Pressure, Vacuum
7	99-3441	1	Harness-Wire, Fusible Link
8	130-7414	1	Bracket
9	3290-378	4	Tie-Cable

Battery Assembly

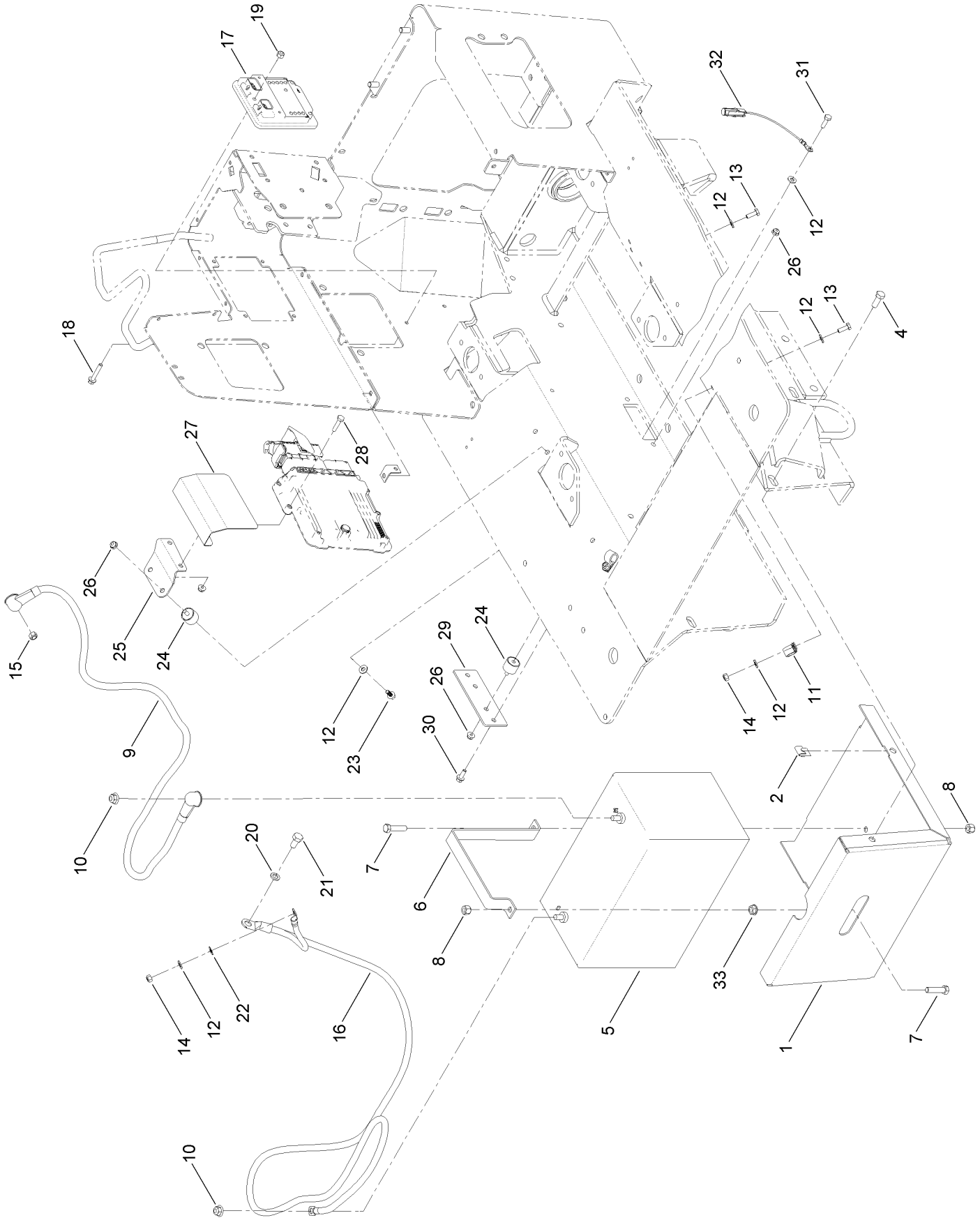

Battery Assembly (continued)

Ref.	Part Number	Qty.	Description
1	AUH673382-01	1	Rack-Battery
2	AU131-634	4	Nut-Spring
4	3234-42	4	Screw-HHF
5		1	Battery (1000CCA, Wet) ●
6	AUH436777-03	1	Bracket-Battery
7	323-8	2	Screw-HH
8	AU232-4116	2	Nut-Hex
9	122-0113	1	Cable-Battery, Positive
10	104-8301	2	Nut-HF, NI
11	2412-87	2	Clamp-Cable
12	3256-22	10	Washer-Flat
13	321-4	3	Screw-HH
14	32152-4	3	Nut-Lock, Cone
15	33024-00	1	Nut-Lock, NI
16	122-0257	1	Cable-Battery, Negative
17	106-9277	1	Module-Control, Standard
18	94-5781	3	Screw-HHF
19	3296-42	3	Nut-Lock, NI
20	48-9590	1	Washer-Lock
21	33115-020	1	Screw-HH
22	3255-8	1	Washer-Lock
23	99-6810	2	Screw-HHF
24	125-2674	4	Mount-Cylindrical
25	130-4299-03	1	Plate-E C U
26	104-7201	8	Nut-HF
27	130-4300-03	1	Cover-Drip
28	321-7	2	Screw-HH
29	130-4301	1	Plate-E C U
30	3234-4	2	Screw-HHF
31	321-5	2	Screw-HH
32	122-0340	1	Harness-Wire
33	3290-357	1	Nut-HHF, Whiz

● Not serviced separately

Electrical Relay, Lamp and Switch Assembly

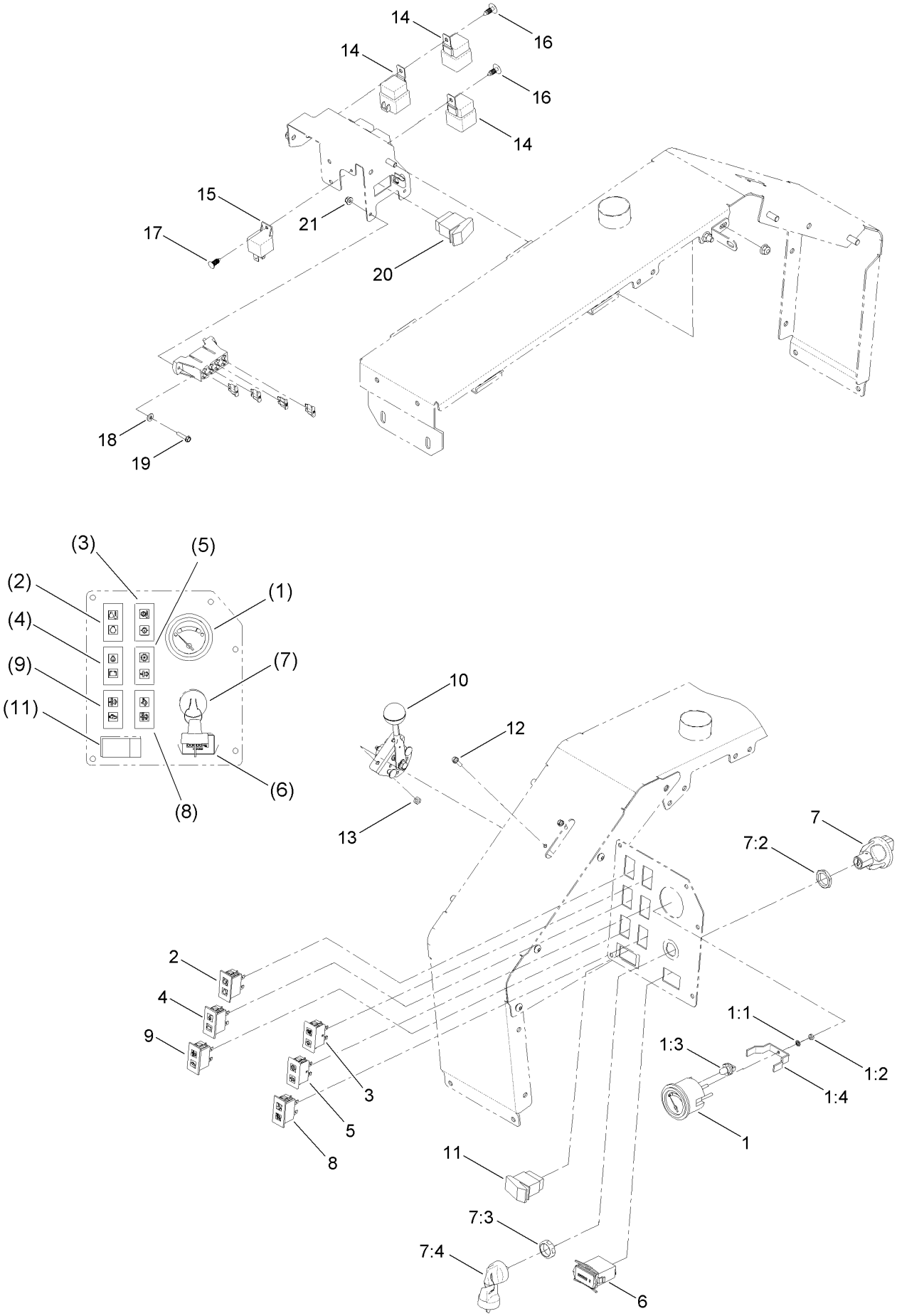

Electrical Relay, Lamp and Switch Assembly (continued)

Ref.	Part Number	Qty.	Description
1	98-9339	1	Gauge-Fuel
1:1	3254-1	3	Washer-Lock, Int
1:2	3217-27	3	Nut-Hex
1:3	105-9265	1	Bulb And Lamp ASM
1:4	105-0038	1	Bracket-Gauge
2	130-7419	1	Light Cluster ASM
3	121-6584	1	Lamp-Warning
4	130-7418	1	Light Cluster ASM
5	121-6582	1	Lamp-Warning
6	1-513374	1	Meter-Hour
7	121-5159	1	Ignition Switch ASM
7:2	121-5160	1	Nut-Hex
7:3	121-5161	1	Nut-Face
7:4	121-5162	1	Set-Key, Ignition

Ref.	Part Number	Qty.	Description
8	130-4321	1	Lamp-Warning
9	130-4322	1	Lamp-Warning
10	130-4328	1	Throttle-Sensor, Rotary
11	130-4347	1	Switch
12	32105-13	2	Screw-HWH
13	3296-2	2	Nut-Lock, NI
14	99-7430	6	Relay-Mini
15	99-7435	1	Relay
16	104-0395	4	Plug-Plastic
17	125-8067	1	Plug-Plastic
18	3256-14	2	Washer-Flat
19	106-9169	2	Screw-HWH
20	95-8999	1	Switch
21	120-4578	2	Nut-HF

Fuel Tank Assembly

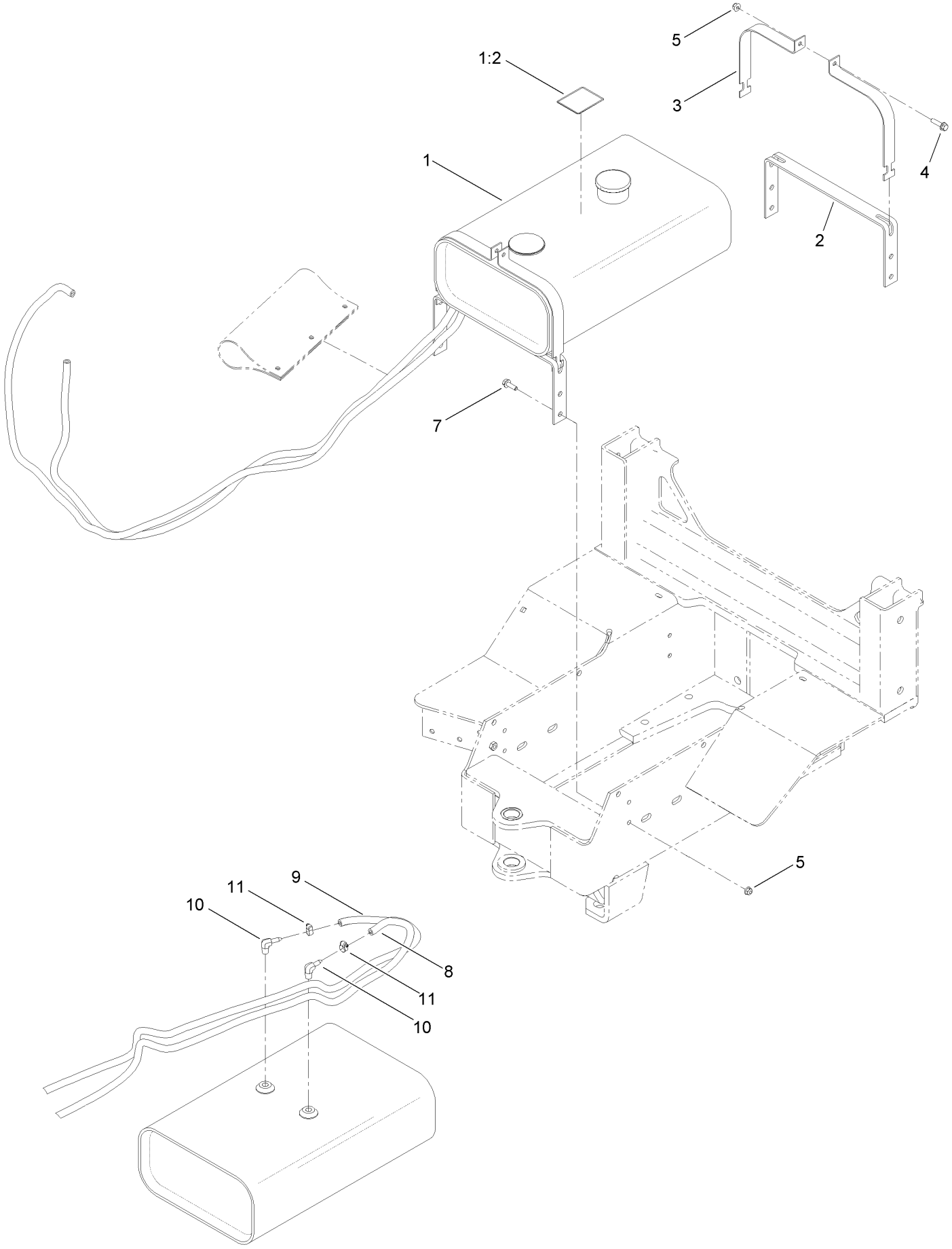

Fuel Tank Assembly (continued)

Ref.	Part Number	Qty.	Description
1	130-7379	1	Fuel Tank ASM
1:2	125-6135	1	Decal-Diesel, Ultra-Low
2	AU105629-03	2	Bracket-Tank, Fuel
3	AU105630-03	4	Strap-Tank, Fuel
4	3234-36	2	Screw-HHF
5	104-8300	10	Nut-HF, NI
7	3234-17	8	Screw-HHF
8	130-4330	1	Hose-Fuel
9	130-4331	1	Hose-Fuel
10	AU217-294	2	Stem-90 (Barb Hose)
11	2412-108	2	Clamp-Worm

Fuel Pump and Oil Filter Assembly

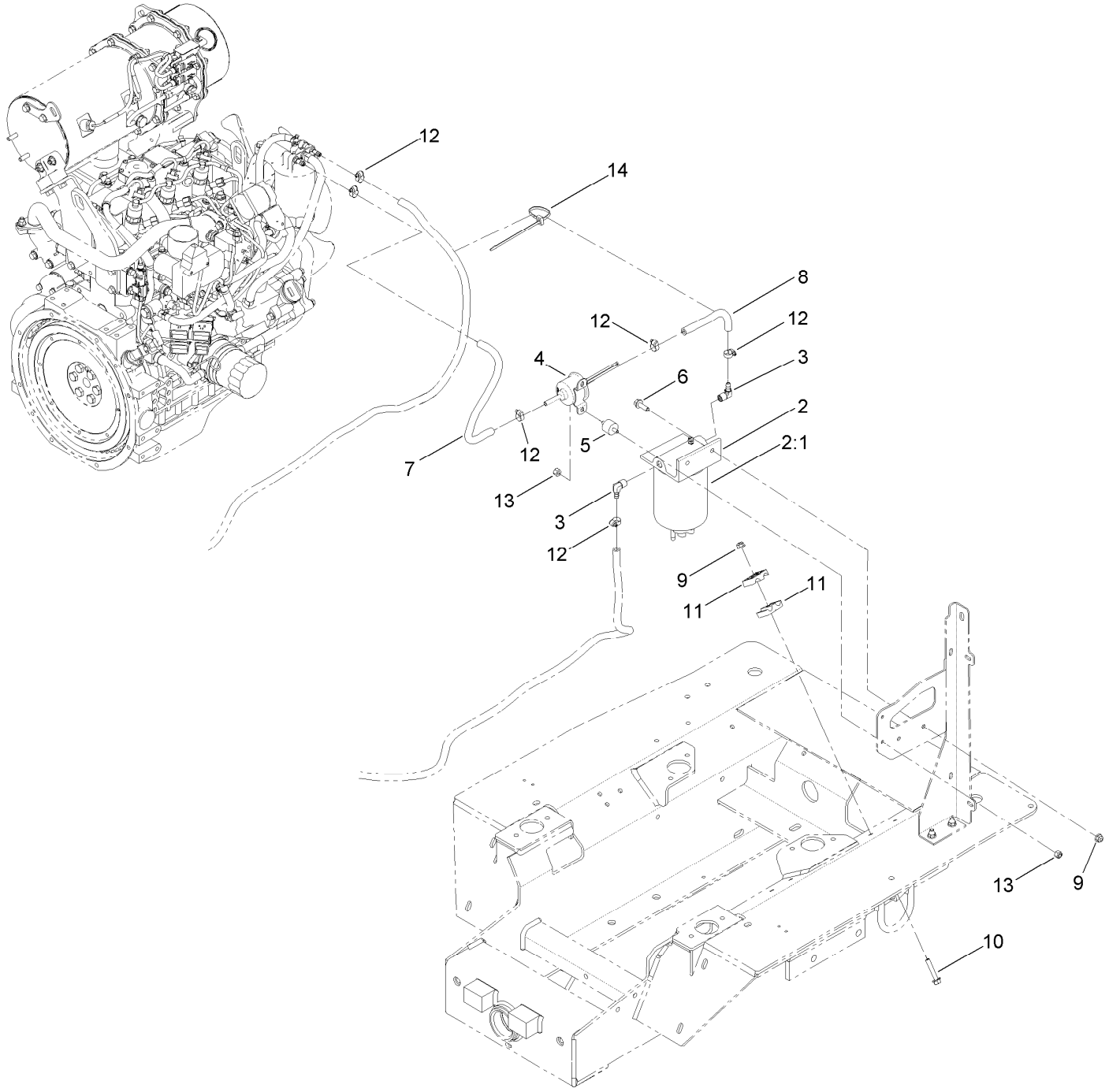

Fuel Pump and Oil Filter Assembly (continued)

Ref.	Part Number	Qty.	Description
2	125-2914	1	Filter-Separator
2:1	125-2915	1	Filter-Fuel/Water Separator
3	353-781	2	Fitting-HYD, 90
4	121-5613	1	Pump-Fuel, Electric
5	125-8511	2	Mount-Isolater
6	3234-17	2	Screw-HHF
7	130-4332	1	Hose-Fuel
8	117-4026	1	Hose-Fuel
9	104-8300	3	Nut-HF, NI
10	94-5780	1	Screw-HWH
11	56-7971	2	Clamp-Tube
12	2412-108	6	Clamp-Worm
13	3296-29	4	Nut-Lock, NI
14	3290-378	1	Tie-Cable

Hydraulic Tank Assembly

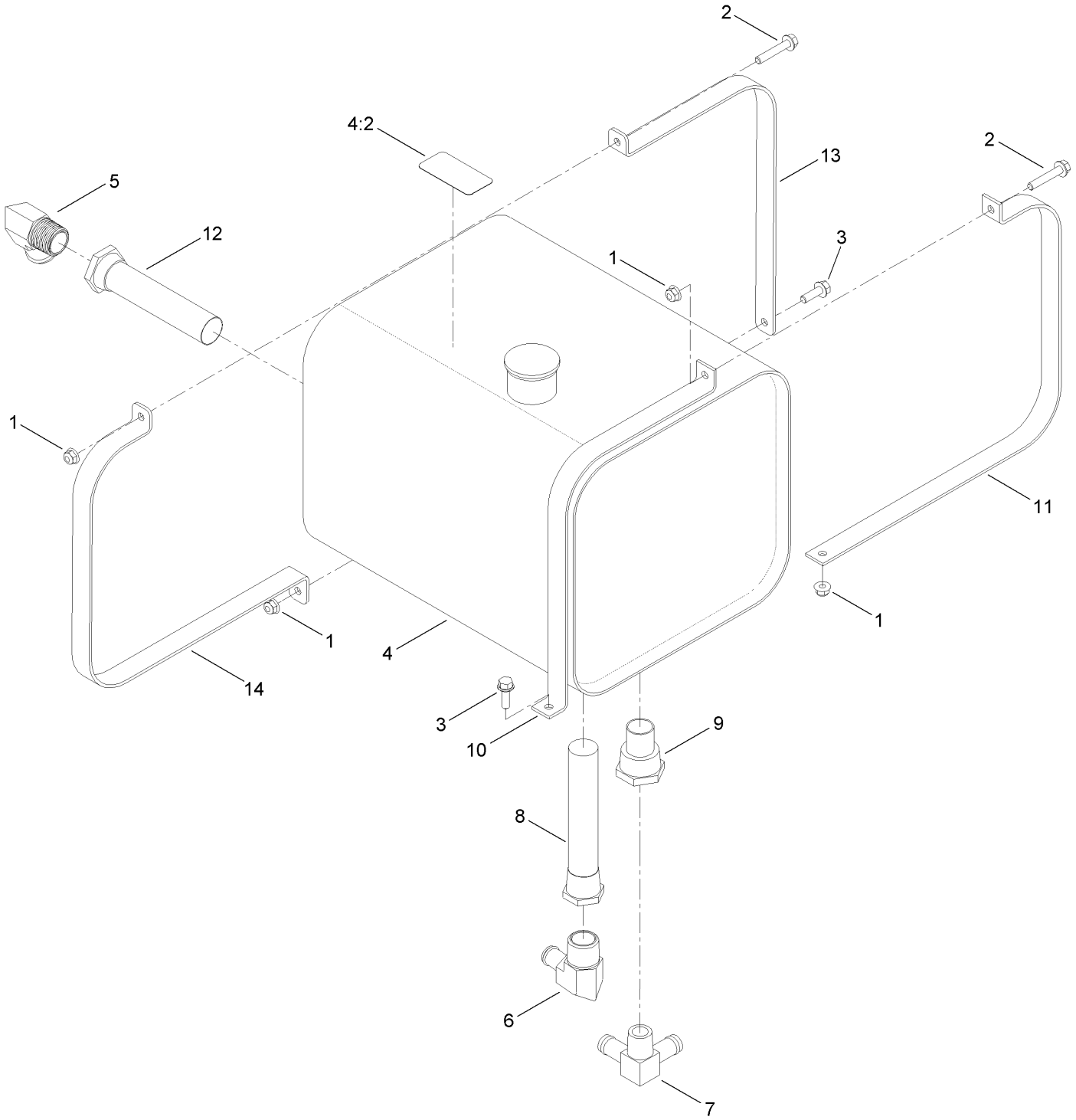

Hydraulic Tank Assembly (continued)

Ref.	Part Number	Qty.	Description
1	104-8300	4	Nut-HF, NI
2	94-5780	2	Screw-HWH
3	3234-29	2	Screw-HHF
4	127-1097	1	HYD Tank ASM
4:2	125-8483	1	Decal-HYD Fluid
5	AU217-166	1	Fitting-Elbow, 90
6	130-4319	1	Fitting-Elbow, 90
7	AUD64786	1	Fitting-Elbow, Lateral
8	AUH151399	1	Filter ASM
9	AUH428193	1	Inducer-Pressure
10	AUH435811-03	1	Strap-Tank
11	AUH435847-03	1	Strap-Tank
12	AUH584631	1	Filter ASM
13	130-4316-03	1	Strap-Tank
14	130-4317-03	1	Strap-Tank

Steering Assembly

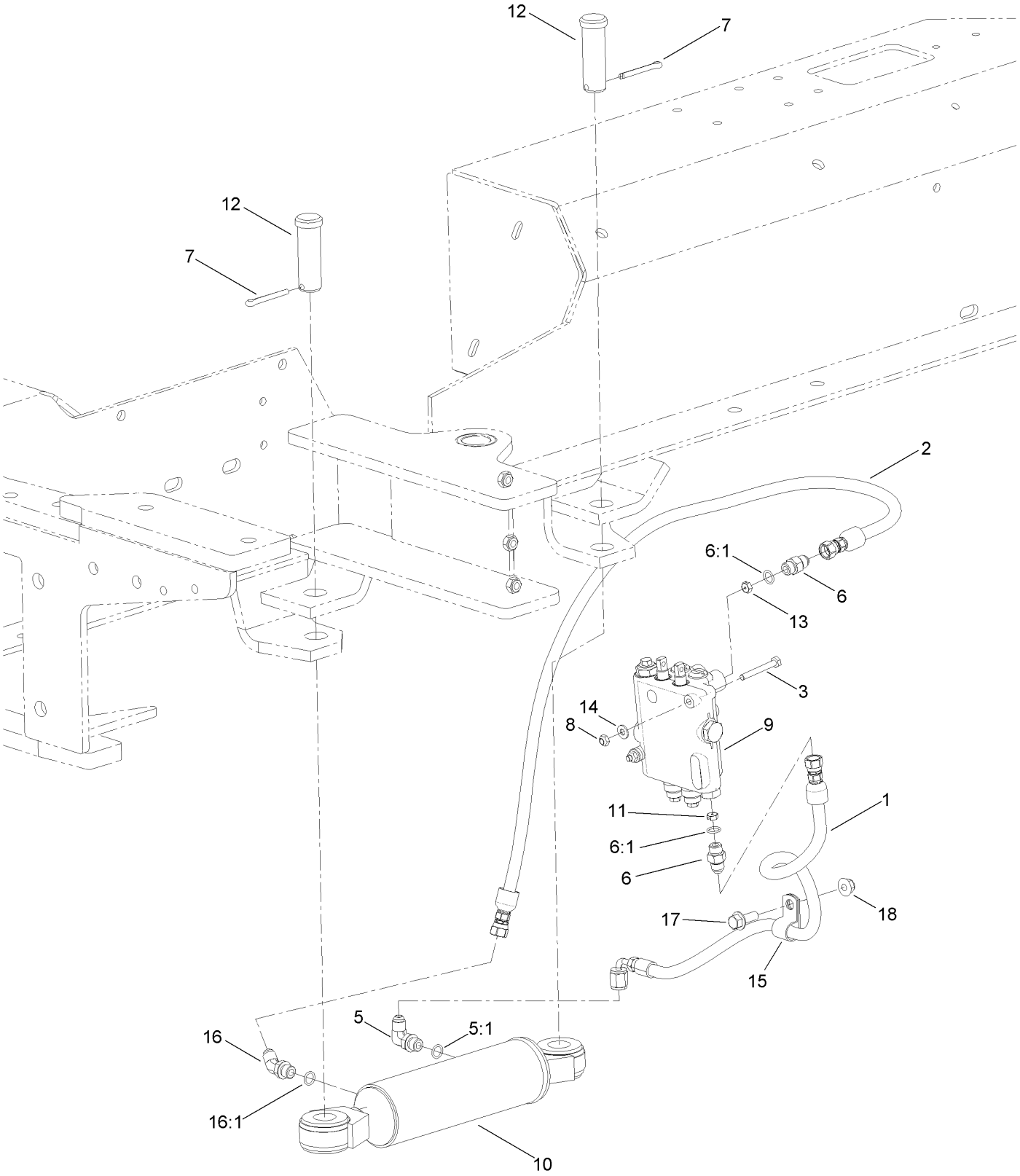

Steering Assembly (continued)

Ref.	Part Number	Qty.	Description
1	127-1001	1	Hose ASM
2	127-1002	1	Hose ASM
3	321-11	2	Screw-HH
5	353-374	1	Fitting-Elbow, 90 DEG
5:1	237-42	1	O-Ring
6	353-384	2	Fitting-Straight
6:1	237-42	1	O-Ring
7	AU432-1628	2	Pin-Cotter
8	146375	2	Nut-Lock, Cone
9	AU407213A1	1	HYD Steering Valve ASM

Ref.	Part Number	Qty.	Description
10	AU125471	1	HYD Cylinder ASM
11	AUH433173	1	Plate-Orifice
12	AUH67272	2	Pin-Clevis
13	AUH746875	1	Plate-Orifice
14	AUH426767	2	Washer-Flat
15	2412-81	1	Clamp-R
16	353-212	1	Fitting-Elbow, 45 DEG
16:1	237-42	1	O-Ring
17	3234-42	1	Screw-HHF
18	104-8301	1	Nut-HF, NI

Hydraulic Steering Valve Assembly No. AU407213A1

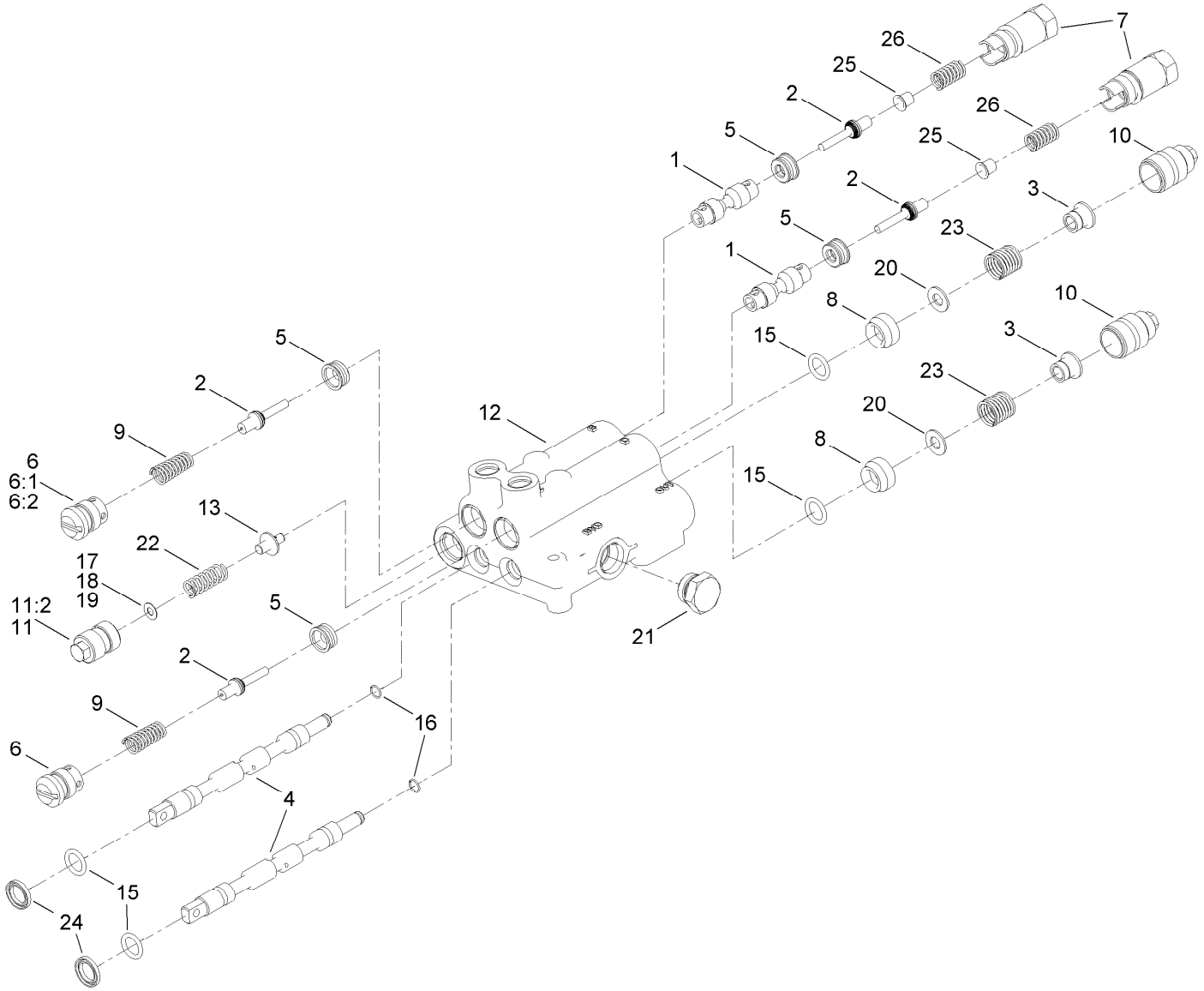

Hydraulic Steering Valve Assembly No. AU407213A1 (continued)

Ref.	Part Number	Qty.	Description
1	127-6238	2	Plunger
2	58-6290	4	Poppet
3	127-6237	2	Spacer
4	106-6750	2	Spool
5	117-9228	4	Seat-Hardened
6	99-3526	2	Plug ASM
6:1	60-5720	1	O-Ring
6:2	59-7730	1	Washer-Backup
7	58-6380	2	Plug
8	58-6400	2	Bushing
9	AUH364182	2	Lock-Spring
10	58-6420	2	Cap
11	69-1830	1	Plug ASM
11:2	58-6750	1	O-Ring

Ref.	Part Number	Qty.	Description
12		1	Body ●
13	92-2568	1	Poppet
15	58-6450	4	O-Ring
16	AUN9257	2	Ring-Retaining
17	58-6470	1	Washer
18	58-6480	1	Washer
19	58-6490	1	Washer
20	65-2770	2	Washer
21	127-6239	1	Plug ASM
22	106-0267	1	Spring
23	99-3531	2	Spring
24	58-6320	2	Wiper
25	60-6440	2	Eyelet
26	58-6410	2	Spring

● Not serviced separately

Pump Assembly

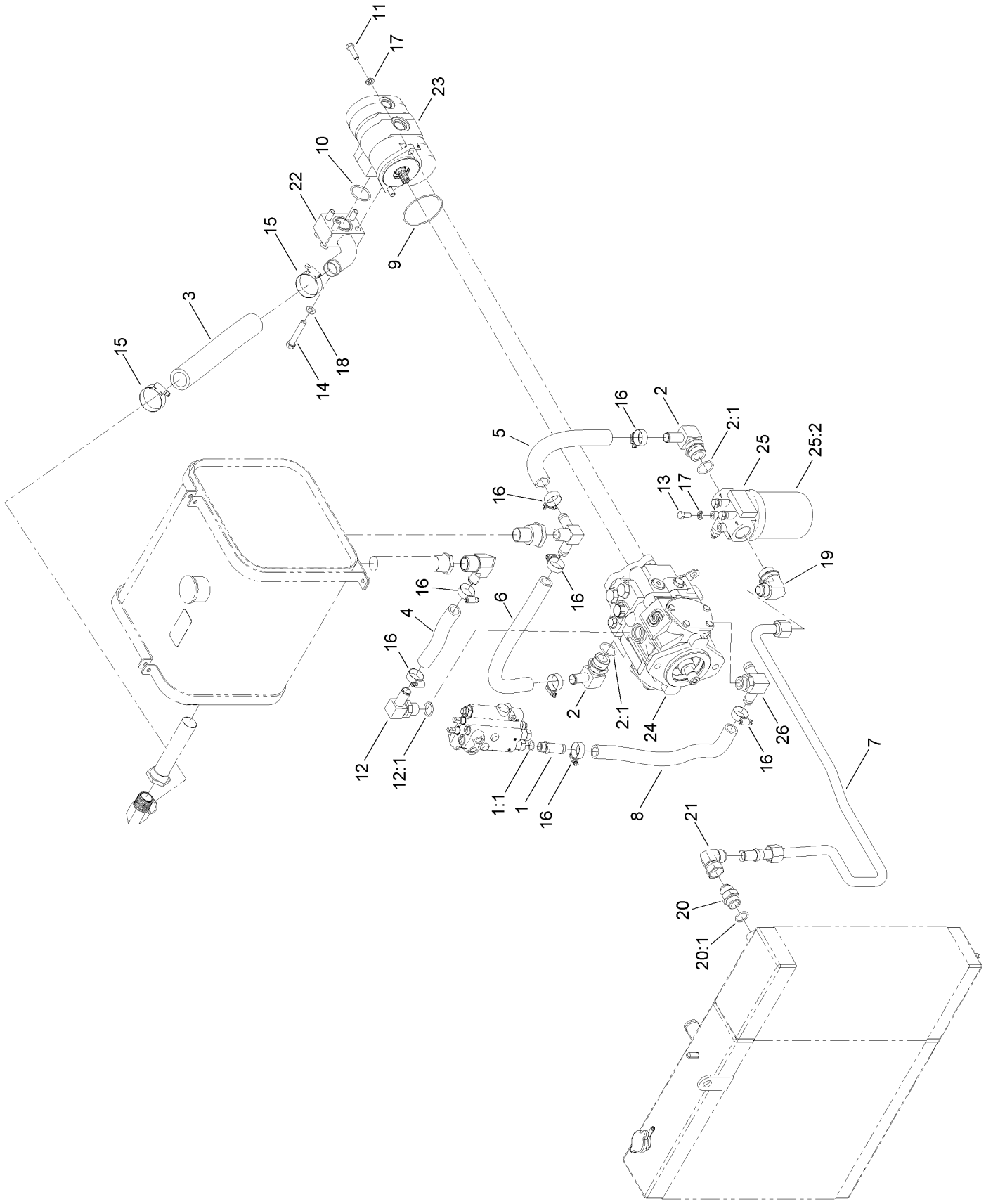

Pump Assembly (continued)

Ref.	Part Number	Qty.	Description
1	83-1480	1	Fitting-Straight
1:1	237-79	1	O-Ring
2	98-0971	2	Fitting-Elbow, 90
2:1	237-117	1	O-Ring
3	125-8543	1	Hose-Suction
4	130-7390	1	Hose-Low Pressure
5	130-7389	1	Hose-Low Pressure
6	125-8546	1	Hose-HYD
7	130-7355	1	Hydraulic Tube ASM
8	125-8546	1	Hose-HYD
9	AU238-5152	1	O-Ring
10	AU238-5222	1	O-Ring
11	323-7	2	Screw-HH
12	353-987	1	Fitting-Elbow, 90
12:1	237-81	1	O-Ring
13	323-4	3	Screw-HH
14	324-10	4	Screw-HH
15	2412-75	2	Clamp
16	2412-129	8	Clamp-Hose
17	3253-21	5	Washer-Lock
18	3253-6	4	Washer-Lock
19	AU218-5118	1	Elbow
20	AU218-5064	1	Fitting-Straight
20:1	237-81	1	O-Ring
21	AU218-5231	1	Fitting-Elbow, 90
22	127-6556	1	Flange-Pump
23	127-6550	1	HYD Pump ASM (Double)
24	AU239918A1	1	HYD Variable Pump ASM
25	127-8423	1	HYD Filter ASM
25:2	110-4146	1	Filter-HYD
26	AUH339762	1	Tee

Hydraulic Variable Pump
Assembly No. AU239918A1

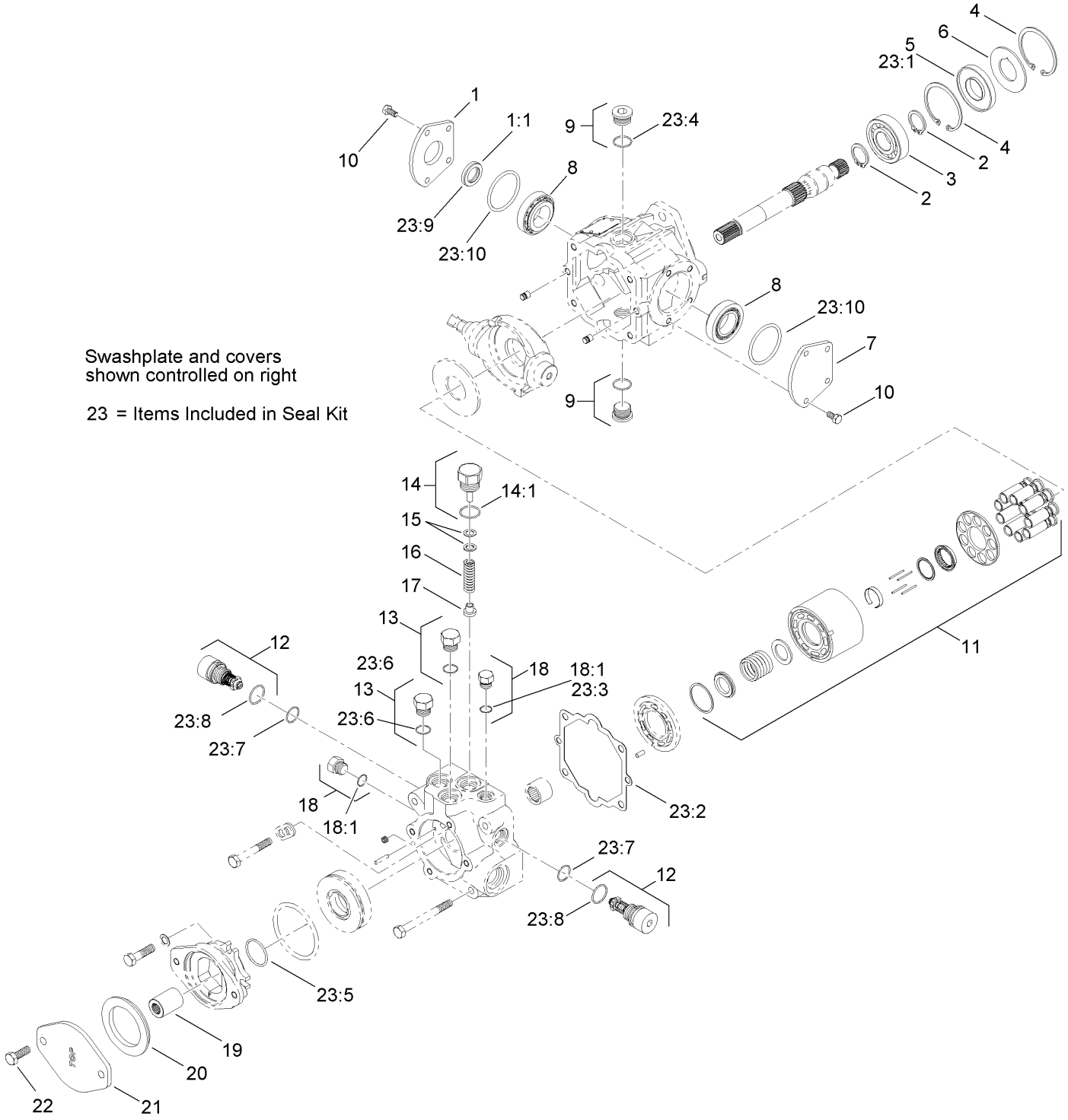

Hydraulic Variable Pump
Assembly No. AU239918A1 (continued)

Ref.	Part Number	Qty.	Description
1	110-6499	1	Trunnion Cover ASM
1:1	110-6478	1	Seal-Lip
2	69-3170	2	Ring-Retaining
3	75-0460	1	Bearing-Ball
4	69-3200	2	Ring-Retaining
5	110-6471	1	Seal-Lip
6	95-4400	1	Washer-Backup
7	84-0440	1	Cover-Trunnion
8	110-6483	2	Bearing Kit
9	69-3130	2	Plug
10	112-0151	8	Screw
11	127-6247	1	Cylinder Block Kit
12	127-6228	2	Valve-Solenoid, Check
13	88-8210	2	Plug
14	110-6486	1	Plug-Relief, Charge
14:1	28-3570	1	O-Ring
15	92-1353	1	Shim Kit
16	110-6474	1	Spring
17	84-0480	1	Poppet-Relief, Charge
18	94-9415	2	Plug ASM
18:1		1	O-Ring ●
19	127-6226	1	Coupling
20	107-4377	1	Seal-A, Pad
21	107-4378	1	Cover
22	69-3400	2	Screw
23	910643	1	Seal Kit
23:1		1	Seal-Lip ●
23:2		1	Gasket-End Cap ●
23:3		2	O-Ring ●
23:4		2	O-Ring ●
23:5		1	O-Ring ●
23:6		2	O-Ring ●
23:7		1	O-Ring ●
23:8		1	R-Ring ●
23:9		1	Seal-Lip ●
23:10		2	O-Ring ●

● Not serviced separately

Hydraulic Plumbing Assembly

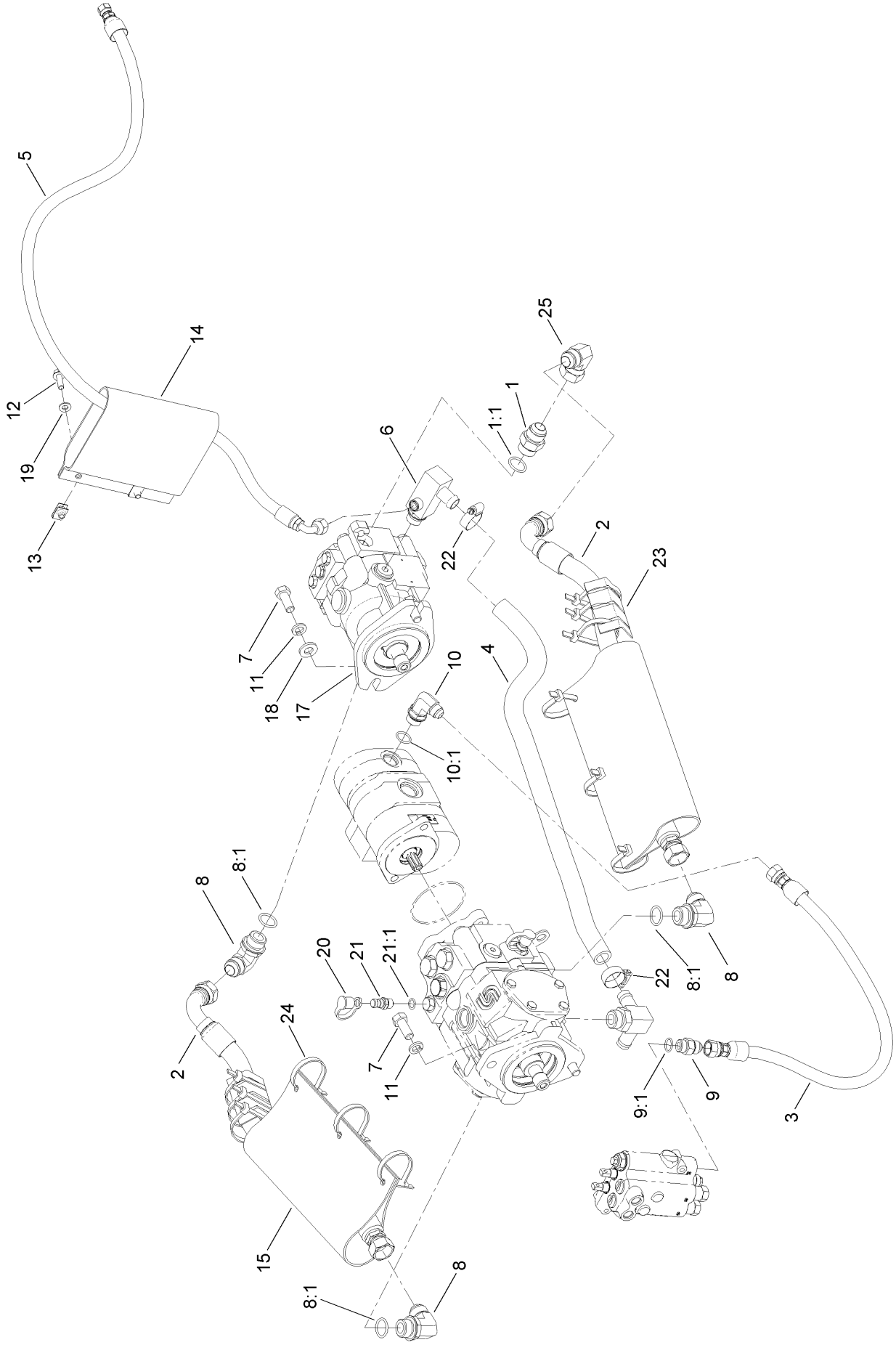

Hydraulic Plumbing Assembly (continued)

Ref.	Part Number	Qty.	Description
1	AU218-5064	1	Fitting-Straight
1:1	237-81	1	O-Ring
2	125-8549	2	Hose (Pump To Reg Valve)
3	127-1003	1	Hose ASM
4	130-7362	1	Hose ASM
5	127-1021	1	Hose ASM
6	127-1023	1	Fitting-90 DEG (Special)
7	325-5	4	Screw-HH
8	353-369	3	Fitting-Elbow, 90 DEG
8:1	237-81	1	O-Ring
9	353-388	1	Fitting-Straight
9:1	237-79	1	O-Ring
10	353-426	1	Fitting-90 DEG
10:1	237-80	1	O-Ring
11	3253-7	4	Washer-Lock

Ref.	Part Number	Qty.	Description
12	3234-29	2	Screw-HHF
13	115-7721	2	Nut-Clip, U
14	AU107409	1	Boot-Hose
15	AU123989A1	2	Boot-Hose
17	AU239920A2	1	HYD Piston Motor ASM
18	AUH274894	2	Washer
19	3256-23	2	Washer-Plain
20	354-79	2	Cap-Dust
21	59-7410	2	Fitting-Diagnostic
21:1	237-42	1	O-Ring
22	2412-129	2	Clamp-Hose
23	AU112950	2	Protector-Hose
24	3334-945	12	Tie-Cable
25	AU218-5231	1	Fitting-Elbow, 90

Hydraulic Piston Motor Assembly No. AU239920A2

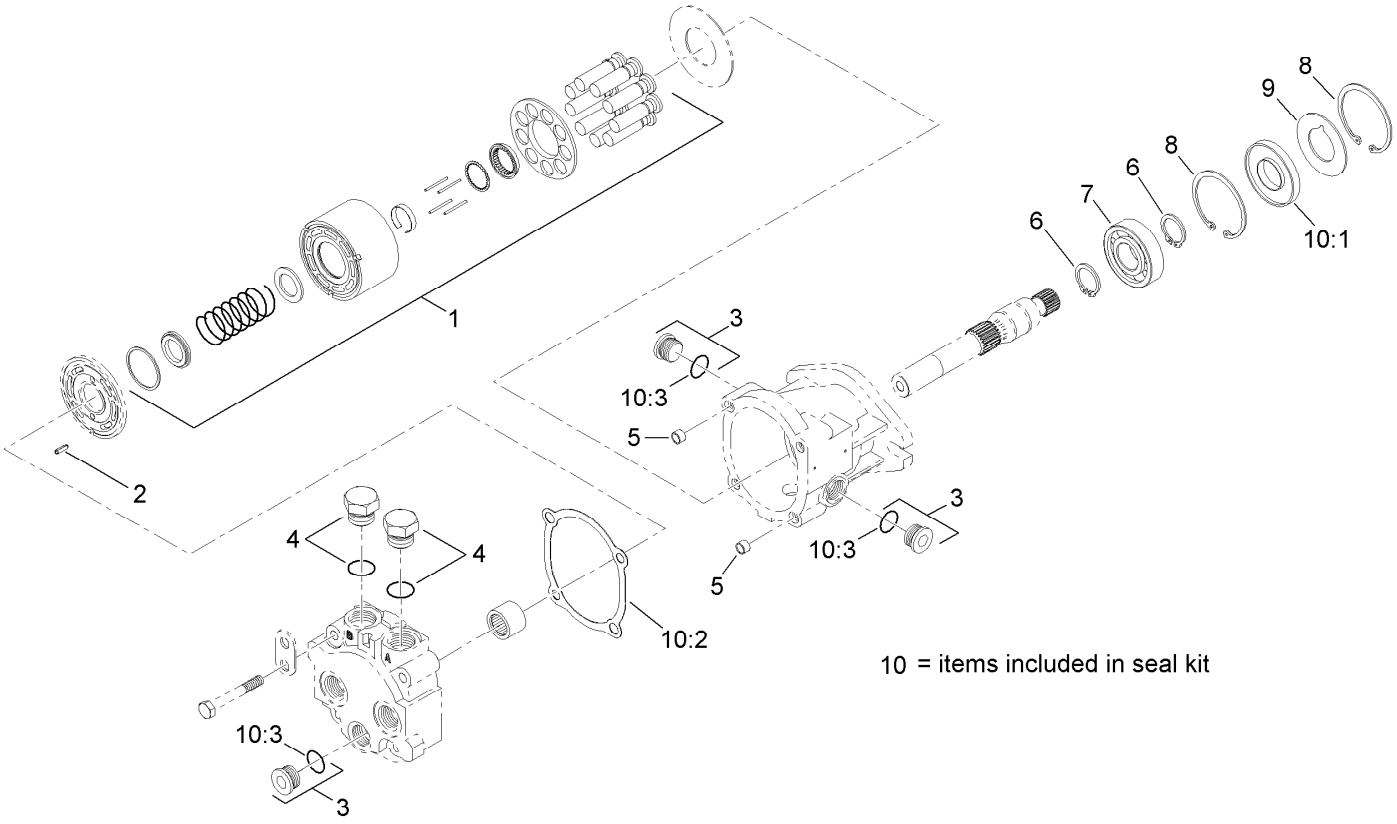

Hydraulic Piston Motor Assembly No. AU239920A2 (continued)

Ref.	Part Number	Qty.	Description
1	127-6247	1	Cylinder Block Kit
2	83-3880	1	Pin-Spring
3	92-5717	3	Plug-Pipe
4	69-3130	2	Plug
5	69-3230	1	Pin-Spring
6	69-3170	2	Ring-Retaining
7	75-0460	1	Bearing-Ball
8	69-3200	2	Ring-Retaining
9	95-4400	1	Washer-Backup
10	127-6246	1	Seal Kit
10:1	69-3190	1	Seal-Lip
10:2		1	Gasket-Cap, End ●
10:3		3	O-Ring ●

● Not serviced separately

Hydraulic Plumbing Assembly No. 2

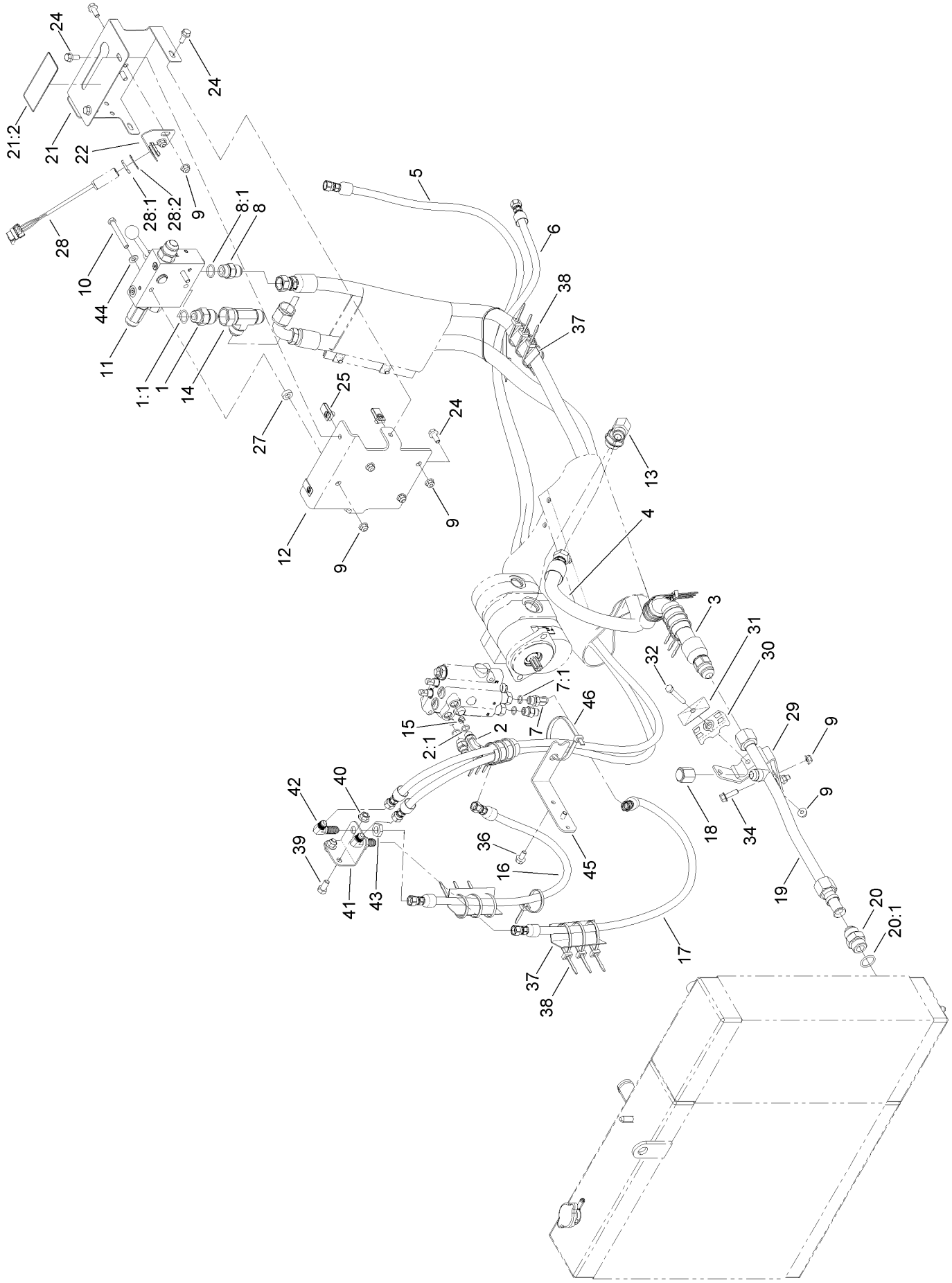

Hydraulic Plumbing Assembly No. 2 (continued)

Ref.	Part Number	Qty.	Description
1	01-201-3290	2	Fitting-Straight
1:1	237-80	1	O-Ring
2	353-374	1	Fitting-Elbow, 90 DEG
2:1	237-42	1	O-Ring
3	130-4323	1	Hose ASM
4	127-1004	1	Hose ASM
5	130-7365	1	Hose ASM
6	130-7366	1	Hose ASM
7	353-212	1	Fitting-Elbow, 45 DEG
7:1	237-42	1	O-Ring
8	353-385	1	Fitting-Straight
8:1	237-80	1	O-Ring
9	104-8300	9	Nut-HF, NI
10	120-2812	2	Screw-HH
11	127-6591	1	Valve-Control, Vibe Plow
12	130-4296-01	1	Plate-Valve, Plow
13	AU218-5119	1	Adaptor-Elbow
14	AU218-5221	1	Fitting-Tee
15	AUH757815	1	Orifice
16	127-1015	1	Hose ASM
17	127-1016	1	Hose ASM
18	AU218-756	1	Fitting-Cap
19	130-7354	1	HYD Tube ASM
20	AU218-5064	1	Fitting-Straight
20:1	237-81	1	O-Ring

Ref.	Part Number	Qty.	Description
21	130-4344	1	Cover Plate ASM
21:2	127-1822	1	Decal-Vibe Plow Control
22	130-4298	1	Plate-Sensor
24	3234-47	8	Screw-HHF
25	AUH346650	4	Nut-U Type
27	104-1156	2	Spacer
28	115-5300	1	Proximity Switch ASM
28:1	117-3207	2	Nut-Hex
28:2	117-3208	2	Washer-Lock, Internal Tooth
29	130-7364-03	1	Bracket-Tube
30	94-8105	2	Clamp-Tube
31	69-9761	1	Plate-Cover
32	322-11	1	Screw-HH
34	3234-29	2	Screw-HHF
36	33104-016	2	Screw-HHF
37	AU112950	6	Protector-Hose
38	3290-378	22	Tie-Cable
39	323-4	2	Screw-HH
40	104-8301	2	Nut-HF, NI
41	130-7368-03	1	Plate-Bulkhead
42	130-7370	2	Union-Bulkhead, Elbow 90
43	AU218-1254	2	Nut-Lock, Bulkhead
44	3256-23	2	Washer-Plain
45	130-7423	1	Bracket-Hose
46	3334-945	1	Tie-Cable

Plow Frame, Blade Mounting and Transmission Assembly

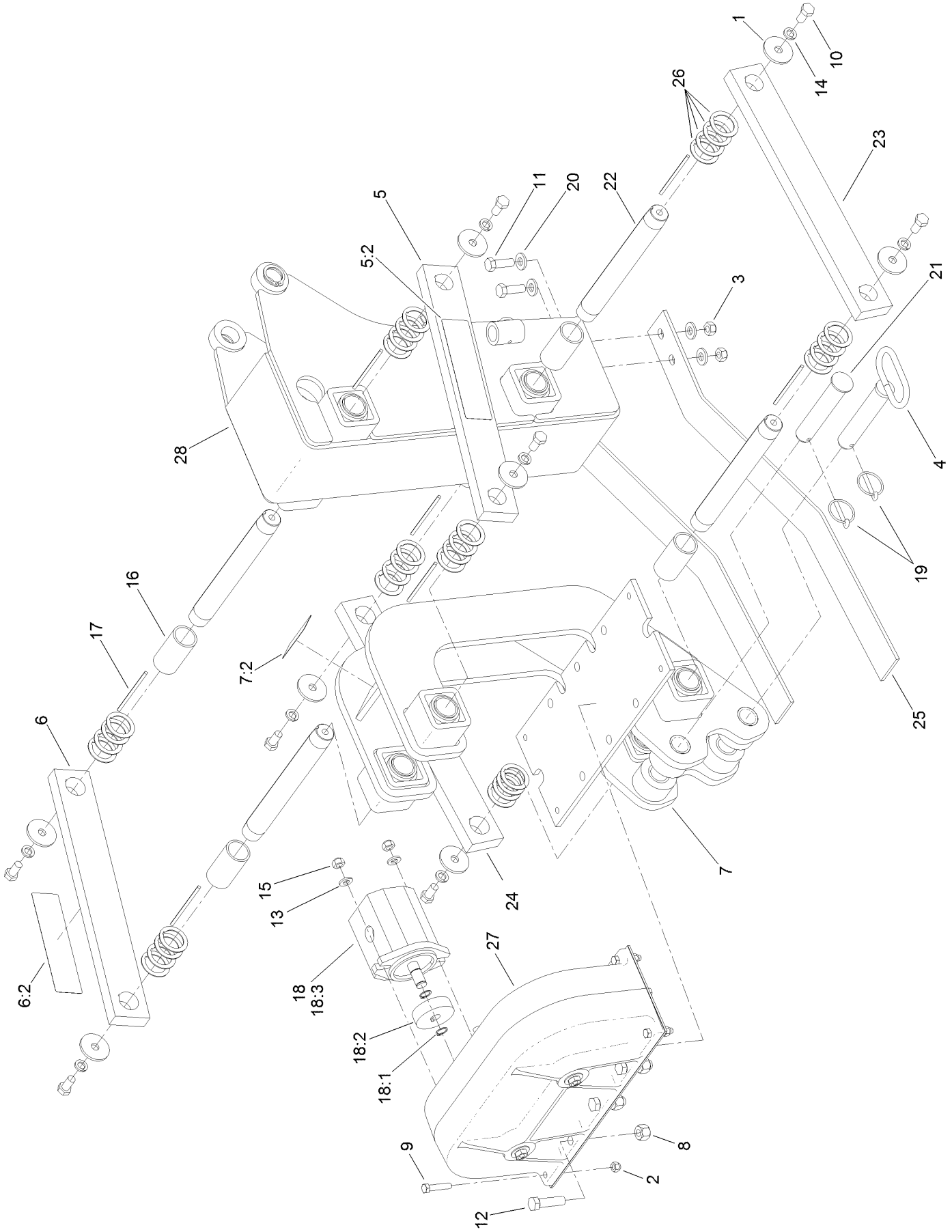

Plow Frame, Blade Mounting and Transmission Assembly (continued)

Ref.	Part Number	Qty.	Description
1	75-7730	8	Washer-Thrust
2	97-1204	4	Nut-Hex
3	97-1206	4	Locknut
4	125-8528	1	Pin
5	127-1039	1	RH Upper Bar And Decal ASM
5:2	125-6684	1	Decal-Danger, Plow
6	127-1040	1	LH Upper Bar And Decal ASM
6:2	125-6684	1	Decal-Danger, Plow
7	127-1041	1	Mounting Blade And Decal ASM
7:2	125-6671	1	Decal-Danger
8	AU232-4119	6	Nut-Hex
9	323-52	4	Screw-HH
10	325-4	8	Screw-HH
11	325-6	4	Screw-HH
12	AU426-932	6	Bolt
13	87-7480	2	Washer
14	3253-7	8	Washer-Lock
15	32152-9	2	Nut-Hex
16	AU116372A1-03	4	Tube-Spacer
17	AU116373A1	8	Key-Square
18		1	HYD Gear Motor ASM ●
18:1	32151-79	2	Ring-Retaining
18:2	AUH113282	1	Gear-Mounting, Drive
18:3	AU109170A1	1	Gear Motor ASM
19	AUA30338	2	Pin-Klik
20	AUH274894	8	Washer
21	AUH393843	1	Pin-Mounting, Blade
22	AUH421867	4	Shaft-Mounting, Plow Arm
23	AUH435952-03	1	Arm-Plow, Lower (RH)
24	AUH435953-03	1	Arm-Plow, Lower (LH)
25	AUH436096-03	2	Spring-Shoe
26	AUH436118	32	Shim-Arm
27	AUH530204	1	Gear Case ASM
28	AUH673331	1	Frame-Lift, Plow

● Not serviced separately

Gear Case Assembly No. AUH530204

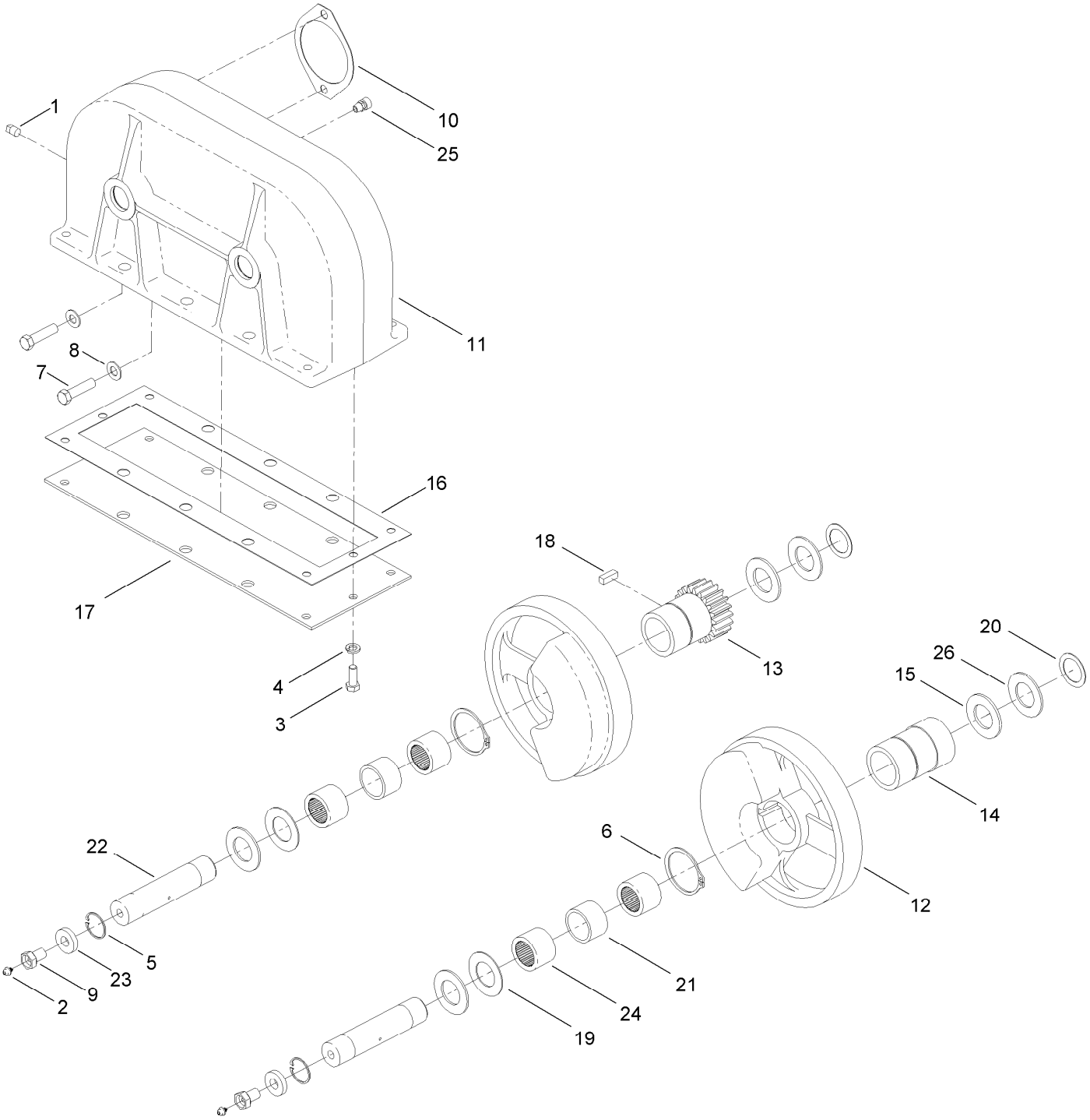

Gear Case Assembly No. AUH530204 (continued)

Ref.	Part Number	Qty.	Description
1	281-7	1	Cap-Pipe
2	302-63	2	Fitting-Grease, Zerk
3	323-6	2	Screw-HH
4	3253-21	2	Washer-Lock
5	32151-51	2	Ring-Retaining
6	AU103-11225	2	Ring-Retaining
7	AU113-372	2	Screw-HH
8	AU495-11047	2	Washer-Flat
9	AUD136218	2	Adapter-Locating
10	AUH032375	1	Gasket
11	AUH113209-03	1	Case-Gear
12	AUH113217	2	Gear
13	AUH113225	1	Hub-Drive, Bearing
14	AUH113233	1	Hub-Bearing
15	AUH113241	2	Washer-10 Gauge
16	AUH113266	1	Gasket-Gearbox
17	AUH113274-03	1	Plate-Cover
18	AUH120550	1	Key-Sq
19	AUH159160	2	Washer-Thrust
20	AUH357517	2	Washer
21	AUH369496	2	Spacer
22	AUH436788	2	Pin-Bearing
23	AUH436789	2	Washer-Flat, Stepped
24	AUH748210	4	Bearing-Pitch Line
25	AUL33264	1	Vent-Air
26	AUH126201	4	Washer-Thrust

Plow Cylinder Assembly

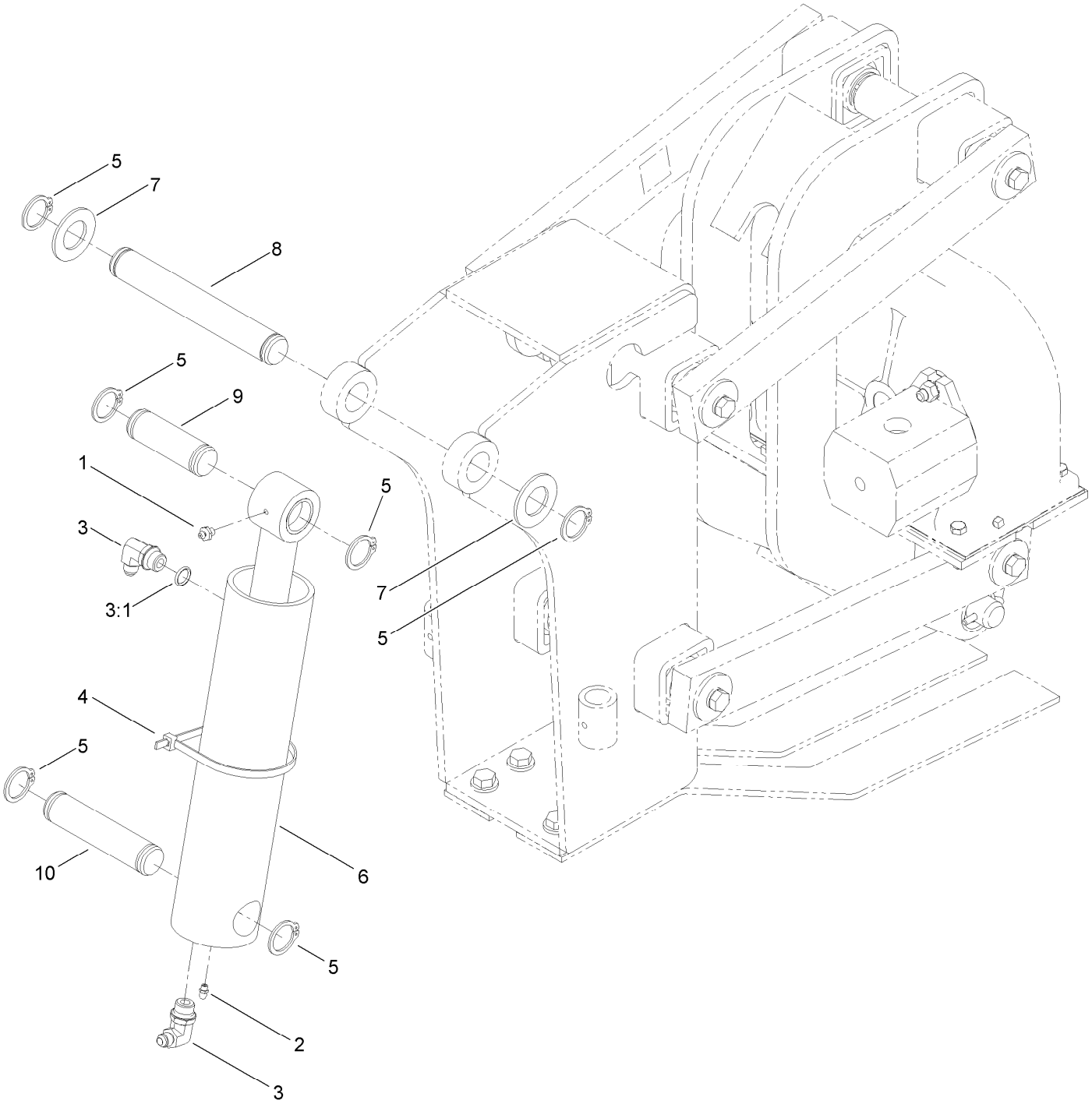

Plow Cylinder Assembly (continued)

Ref.	Part Number	Qty.	Description
1	302-2	1	Fitting-Grease
2	302-57	1	Fitting-Grease
3	353-537	2	Fitting-Elbow, 90 DEG
3:1	237-79	1	O-Ring
4	3334-945	1	Tie-Cable
5	32151-77	6	Ring-Retaining, External
6	AU129434	1	HYD Cylinder ASM
7	AUH113241	2	Washer-10 Gauge
8	AUH382457	1	Pin-Lift
9	AUH434556	1	Pin-Clevis
10	AUH434557	1	Pin-Clevis

Plow Pivot and Quick Attach Slide Assembly

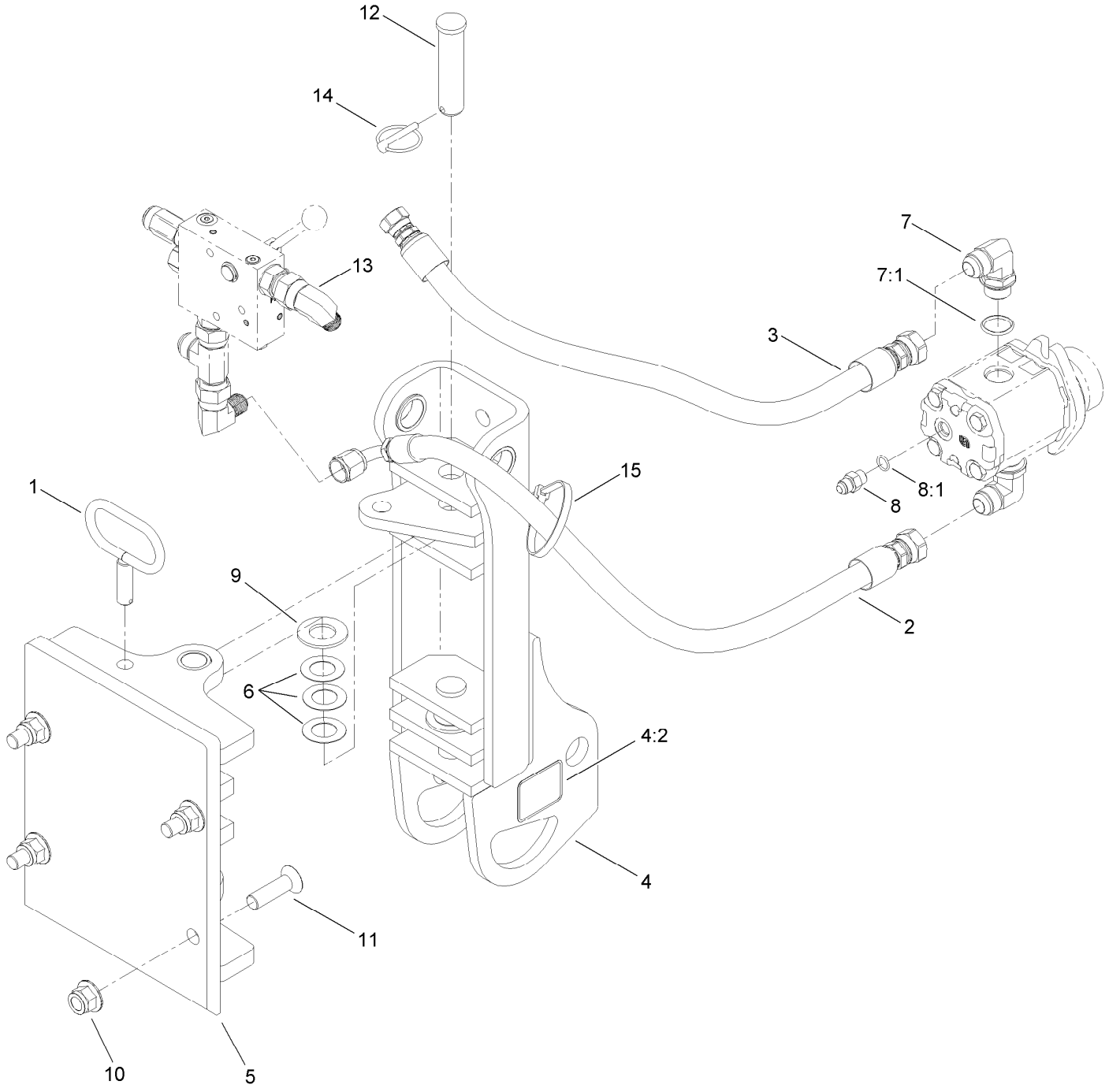

Plow Pivot and Quick Attach Slide Assembly (continued)

Ref.	Part Number	Qty.	Description
1	125-8535	1	Lock-Swing
2	127-1019	1	Hose ASM
3	127-1020	1	Hose ASM
4	127-1044	1	Pivot ASM
4:2	125-6694	2	Decal-Tie Down
5	AU107916-03	1	Slide-Quick Attach
6	AU195-81015	6	Washer-Flat
7	353-369	2	Fitting-Elbow, 90 DEG
7:1	237-81	1	O-Ring
8	353-384	1	Fitting-Straight
8:1	237-42	1	O-Ring
9	AU495-11106	2	Washer-Flat
10	AU100529	4	Nut-HHF
11	AU107931	4	Screw-HSFH
12	AU113192A1	2	Pin-Pivot
13	AU218-5377	2	Fitting-Elbow, 90
14	AUA30338	2	Pin-Klik
15	3334-945	2	Tie-Cable

23 Inch Wheel and Tire Assembly

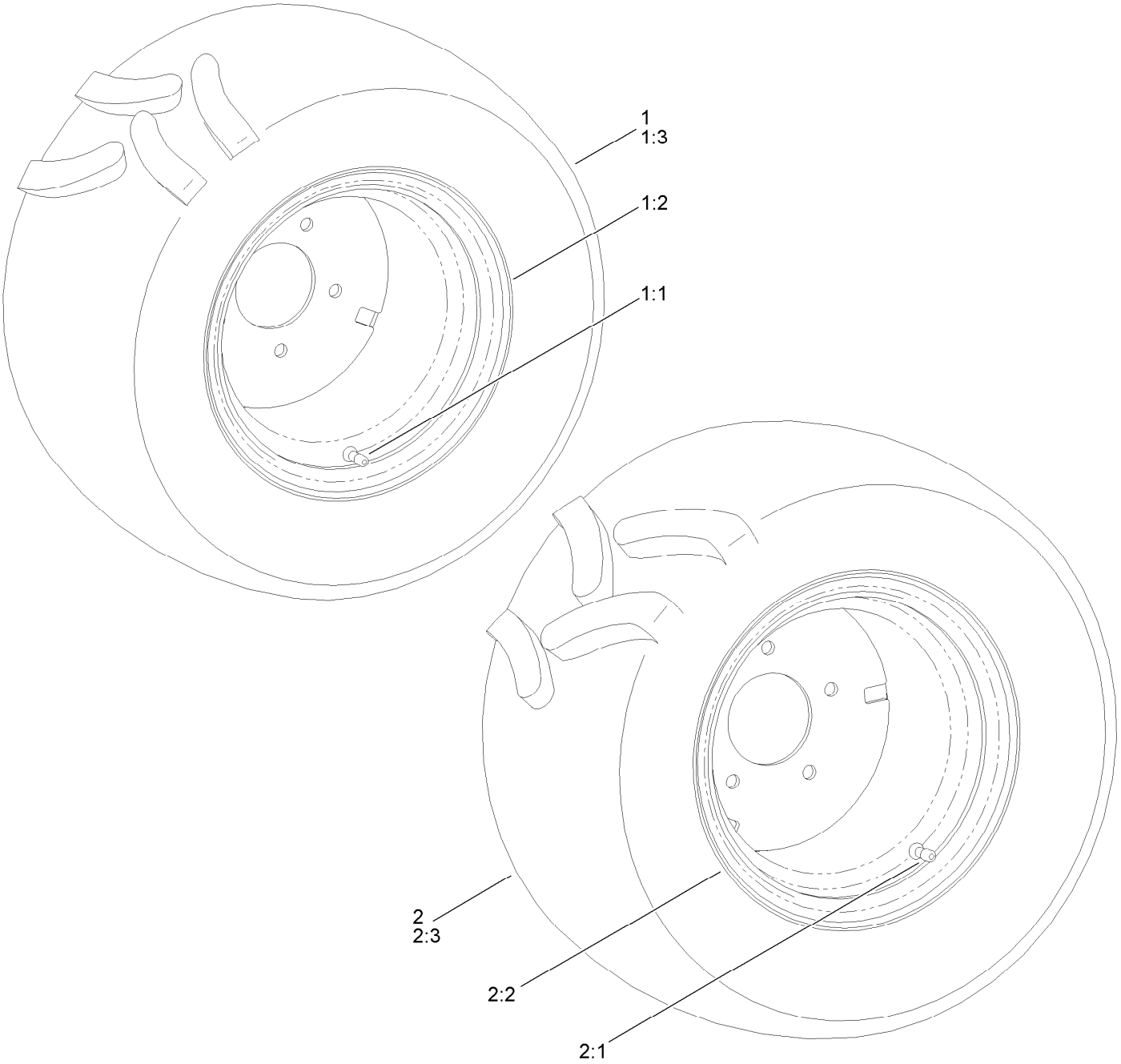

23 Inch Wheel and Tire Assembly (continued)

Ref.	Part Number	Qty.	Description
1	125-8504	2	RH Wheel And Tire ASM
1:1	232-27	1	Stem-Valve
1:2	125-8502	1	Wheel
1:3	125-8503	1	Tire

Ref.	Part Number	Qty.	Description
2	125-8505	2	LH Wheel And Tire ASM
2:1	232-27	1	Stem-Valve
2:2	125-8502	1	Wheel
2:3	125-8503	1	Tire

26 Inch Wheel and Tire Assembly

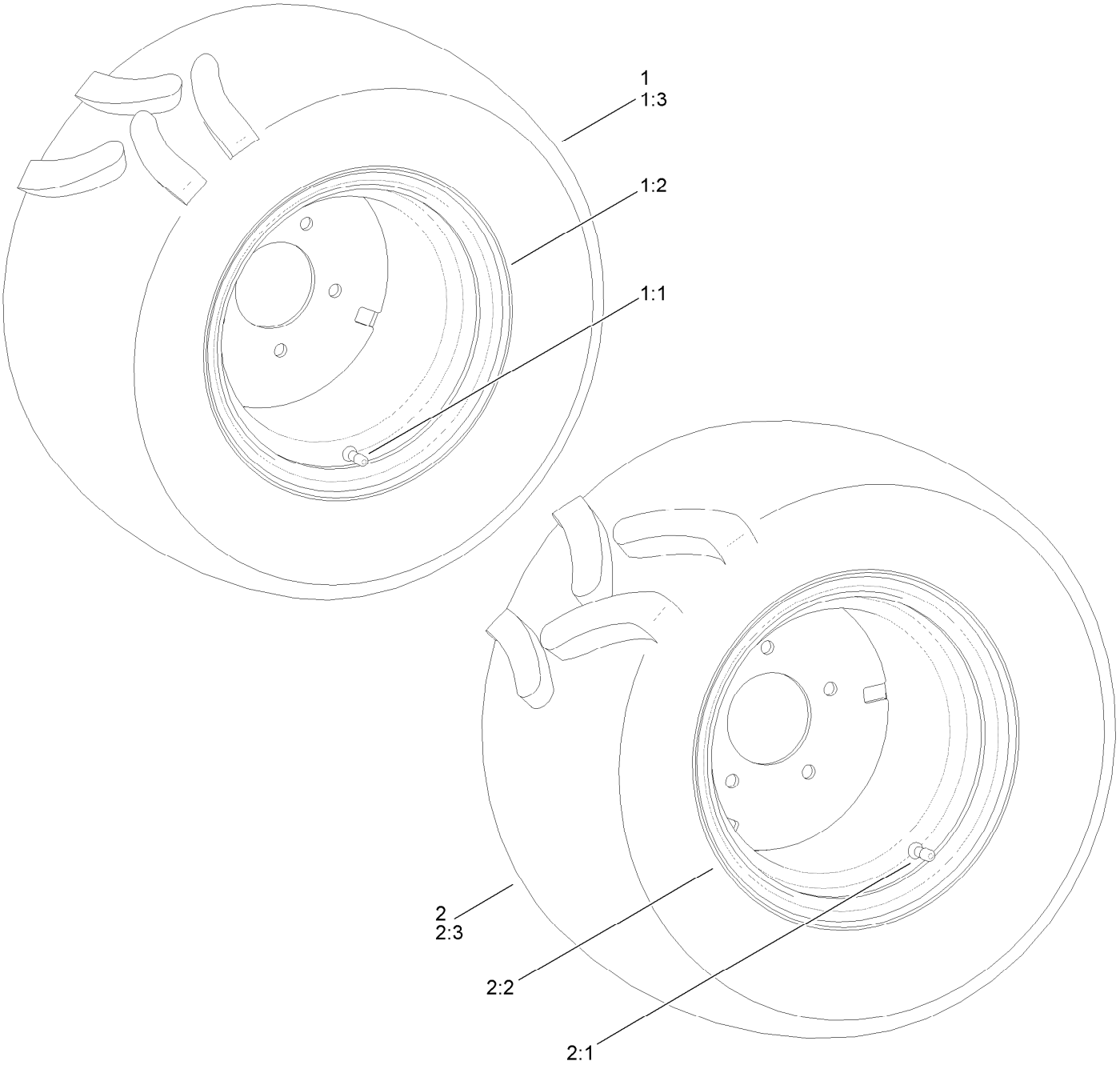

26 Inch Wheel and Tire Assembly (continued)

Ref.	Part Number	Qty.	Description
1	125-8530	2	RH Wheel And Tire ASM
1:1	232-27	1	Stem-Valve
1:2	125-8508	1	Wheel
1:3	125-8507	1	Tire

Ref.	Part Number	Qty.	Description
2	125-8529	2	LH Wheel And Tire ASM
2:1	232-27	1	Stem-Valve
2:2	125-8508	1	Wheel
2:3	125-8507	1	Tire

Cylinder Block Assembly

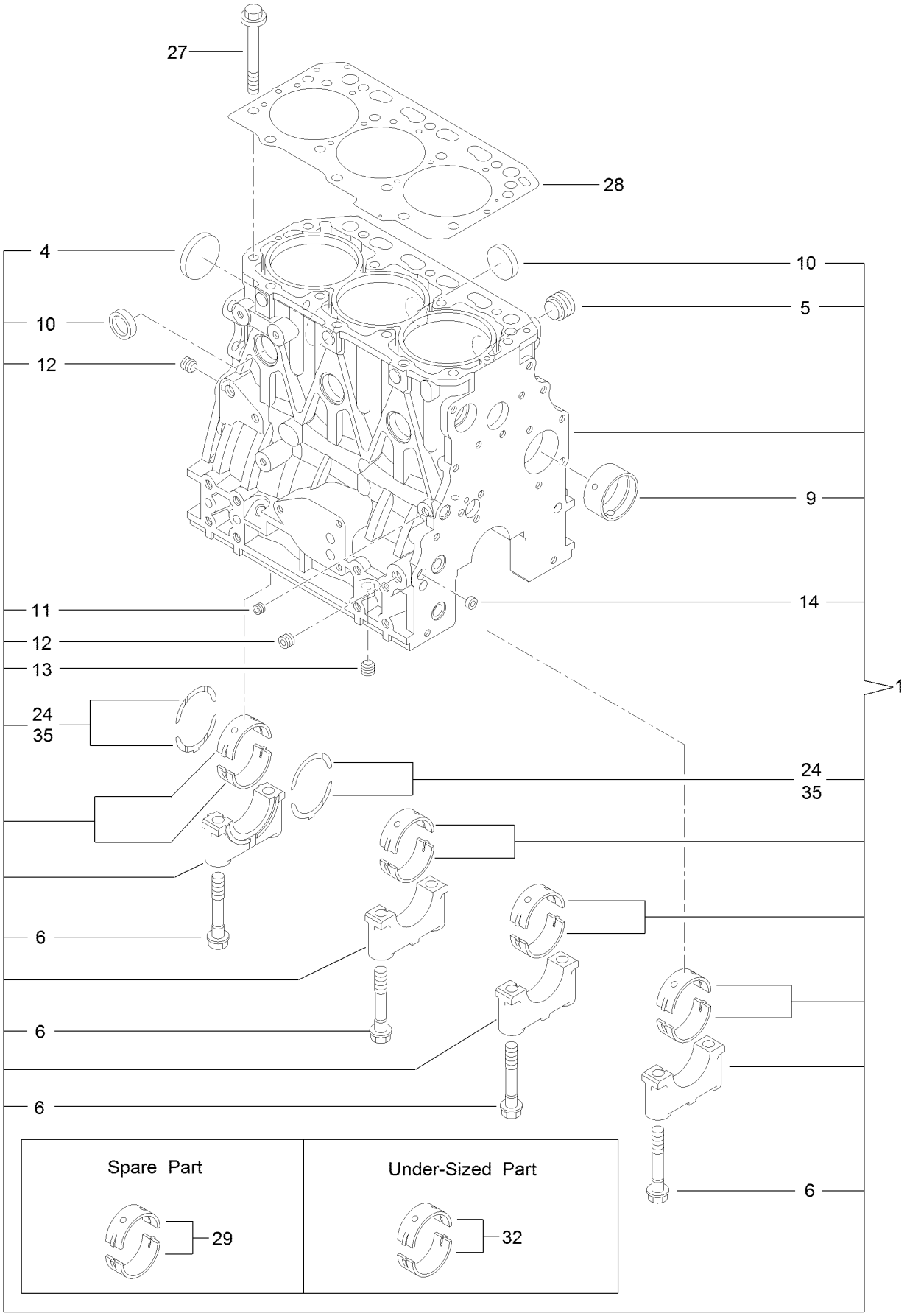

Cylinder Block Assembly (continued)

Ref.	Part Number	Qty.	Description
1	127-4717	1	Cylinder Block ASM
4	125-6980	1	Plug
5	125-7170	1	Plug
6	125-7007	8	Bolt
9	125-7108	1	Bushing
10	125-7239	6	Plug
11	125-6969	1	Plug
12	125-6973	2	Plug
13	125-6973	1	Plug
14	125-7237	1	Plug
24	125-7010	2	Metal-Thrust
27	125-7006	14	Bolt
28	127-4716	1	Head Gasket ASM
29	125-6981	4	Metal-Main
32	125-7009	4	Metal-Main (0.25)
35	125-7011	1	Metal-Thrust (0.25)

Gear Housing Assembly

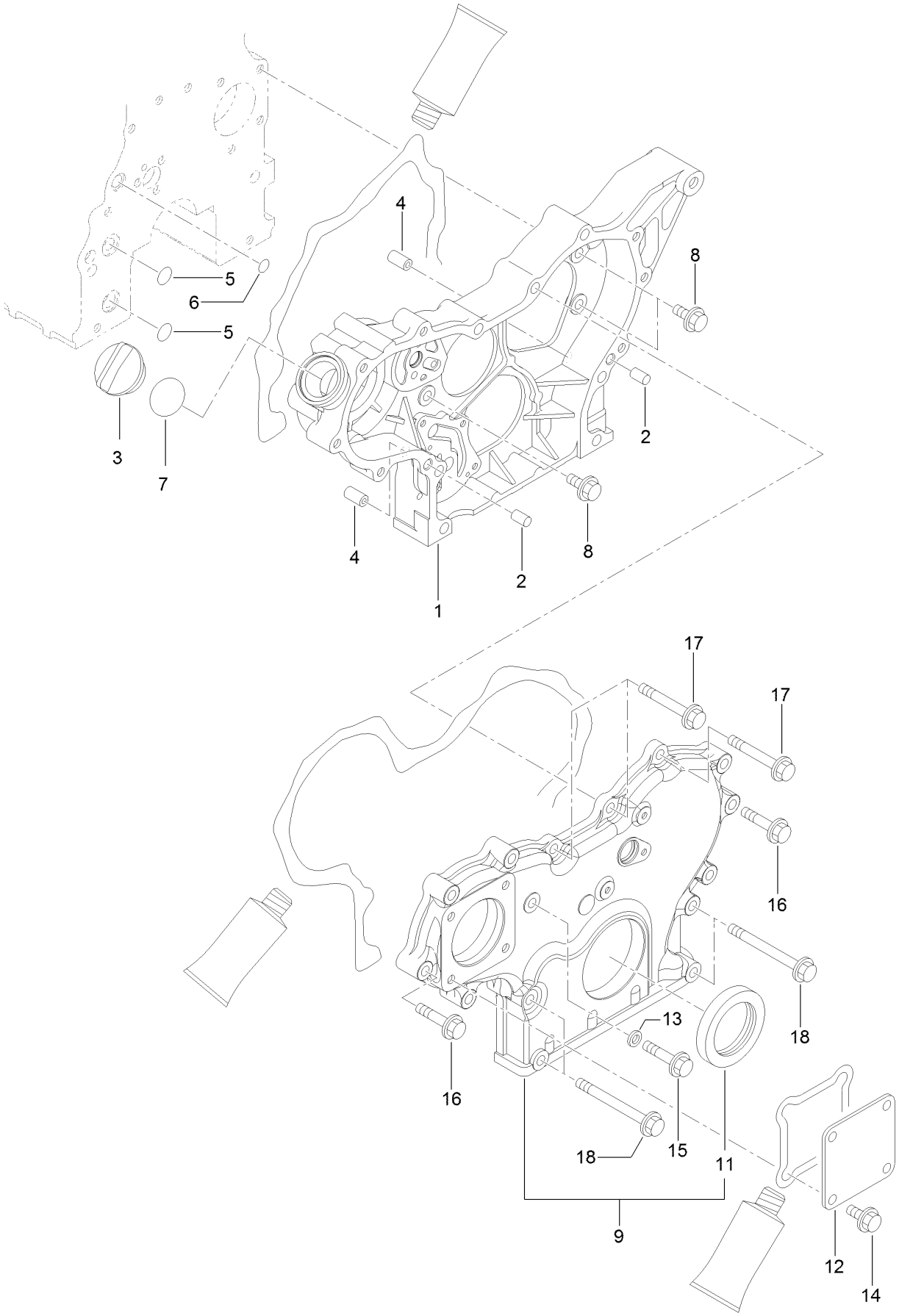

Gear Housing Assembly (continued)

Ref.	Part Number	Qty.	Description
1	127-3023	1	Case-Gear
2	125-6995	2	Pin
3	125-6972	1	Cover-Filler
4	125-7107	2	Pipe
5	125-6909	2	O-Ring
6	127-2973	1	O-Ring
7	125-7197	1	O-Ring
8	100-6928	3	Bolt
9	127-3024	1	Gearcase Cover ASM
11	125-6944	1	Seal-Oil
12	125-6977	1	Cover
13	125-7174	1	Washer-Seal
14	100-6928	4	Bolt
15	125-7217	1	Bolt
16	125-7218	7	Bolt
17	125-7222	3	Bolt
18	125-7224	4	Bolt

Flywheel Housing and Oil Sump Assembly

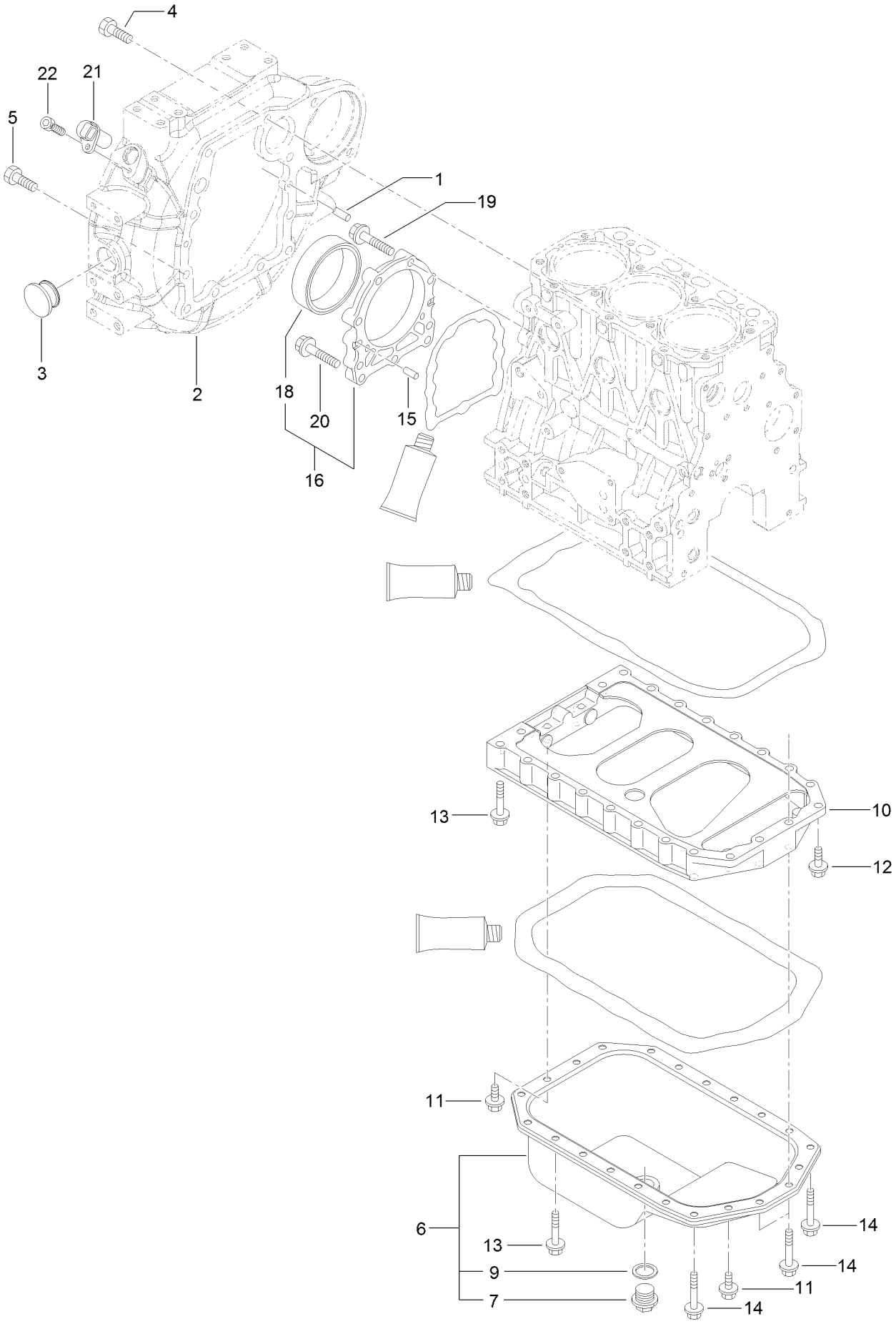

Flywheel Housing and Oil Sump Assembly (continued)

Ref.	Part Number	Qty.	Description
1	125-6995	2	Pin
2	127-3025	1	Housing-Flywheel
3	125-6910	1	Cap
4	125-7226	6	Bolt
5	125-7227	4	Bolt
6	127-4711	1	Oil Pan ASM
7	125-6912	1	Plug-Drain
9	125-7177	1	Washer-Seal
10	127-3756	1	Spacer
11	100-6928	4	Bolt

Ref.	Part Number	Qty.	Description
12	125-7215	2	Bolt
13	125-7219	16	Bolt
14	125-7220	4	Bolt
15	125-6995	2	Pin
16	125-6996	1	Case ASM
18	125-7106	1	Seal-Oil
19	125-7045	6	Bolt
20	125-7217	3	Bolt
21	127-3062	1	Sensor-Rev, Flywheel
22	127-3184	1	Bolt

Cylinder Head and Cover Assembly

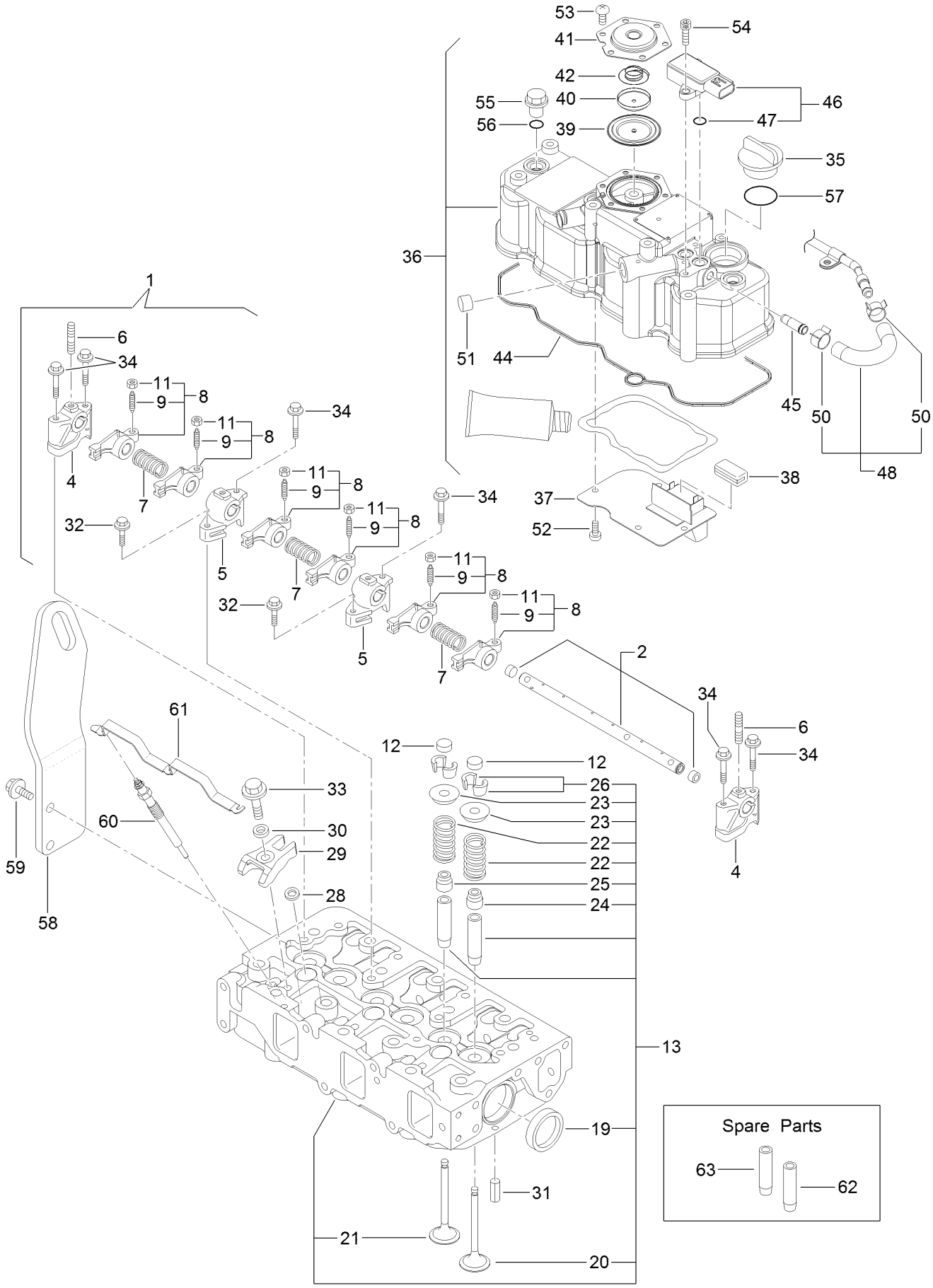

Cylinder Head and Cover Assembly (continued)

Ref.	Part Number	Qty.	Description
1	127-3757	1	Shaft ASM
2	127-3758	1	Shaft
4	127-2974	2	Support
5	127-2975	2	Support
6	127-3759	3	Stud
7	127-2995	3	Spring
8	127-2989	6	Arm-Rocker
9	125-7013	6	Screw-Adjust, Valve
11	125-7014	6	Nut
12	127-2996	6	Cap-Valve
13	127-4720	1	Cylinder Head ASM
19	125-7240	2	Plug
20	127-2990	3	Valve
21	127-4710	3	Valve
22	127-3012	6	Spring
23	127-3013	6	Retainer-Spring
24	127-2986	3	Seal-Stem, Valve
25	127-3027	3	Seal-Stem, Valve
26	127-3186	6	Pin-Cotter
28	127-3021	3	Gasket-Injector
29	127-3028	3	Retainer-Injector
30	127-2980	3	Washer-Injector
31	125-7184	2	Pin-Spring
32	125-7215	2	Bolt
33	125-7217	3	Bolt
34	125-7220	6	Bolt
35	125-6972	1	Cover-Filler

Ref.	Part Number	Qty.	Description
36	127-4719	1	Cylinder Head Cover ASM
37	127-2988	1	Plate
38	125-7012	1	Baffle
39	125-6959	1	Diaphragm
40	125-6960	1	Plate
41	125-6961	1	Plate-Breather
42	125-6962	1	Spring-Diaphragm
44	127-3856	1	Gasket-Valve Cover
45	127-3026	1	Joint
46	127-3029	1	Sensor-Pressure
47	127-3032	2	O Ring-Sensor, Pressure
48	127-3040	1	Hose ASM
50	127-3041	2	Clip-Hose
51	125-6913	1	Plug
52	125-7186	4	Screw
53	125-7186	6	Screw
54	127-3184	2	Bolt
55	125-6974	3	Knob
56	93-0418	3	O-Ring
57	125-7197	1	O-Ring
58	130-7429	1	Lifter, Engine
59	130-7443	2	Bolt, M8 X 20 Plated
60	127-2991	3	Plug-Glow
61	127-3768	1	Connector-Plug, Glow
62	127-2979	3	Guide
63	127-2997	3	Guide-Valve

Suction Manifold Assembly

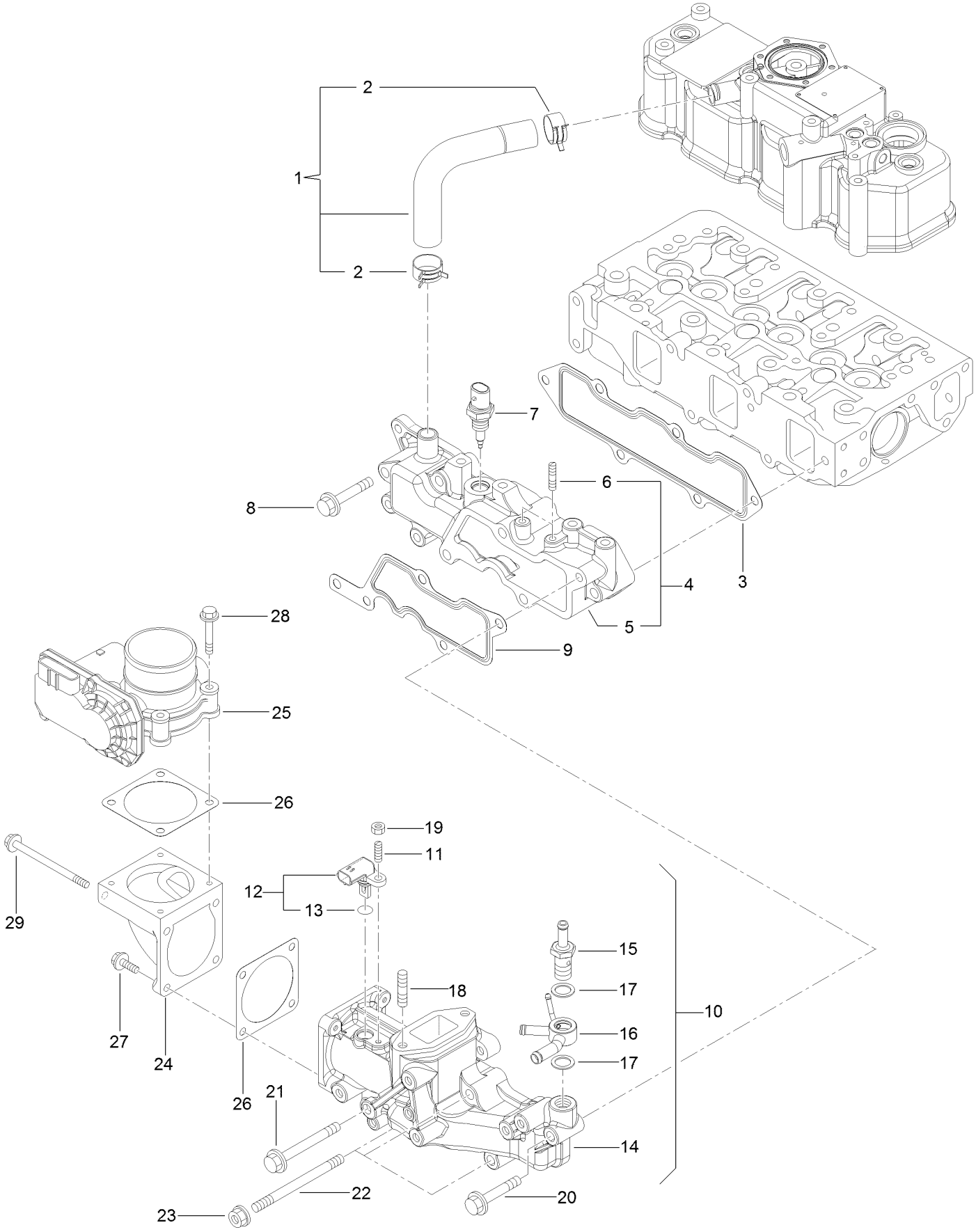

Suction Manifold Assembly (continued)

Ref.	Part Number	Qty.	Description
1	127-4704	1	Pipe
2	125-7040	2	Clip-Hose
3	127-3857	1	Gasket-Manifold, Intake
4	127-4722	1	Intake Manifold ASM
5	127-4721	1	Manifold-Intake
6	127-3180	2	Stud
7	127-3031	1	Sensor-Temp, Air
8	125-7220	3	Bolt
9	127-3034	1	Gasket-Collector
10	127-4725	1	Intake Collector ASM
11	127-4701	1	Stud
12	127-3030	1	Sensor-Temp, Air
13	127-3033	1	O-Ring
14	127-4724	1	Collector-Intake
15	127-3080	1	Joint-Hose
16	127-3081	1	Joint-Hose
17	127-3166	2	Washer-Seal
18	127-4774	2	Stud
19	127-4775	1	Nut
20	125-7220	1	Bolt
21	127-3178	1	Bolt
22	127-3182	3	Stud
23	125-7229	3	Nut
24	127-3035	1	Bend-Inlet
25	127-3036	1	Body-Throttle
26	127-3037	2	Gasket-Throttle
27	125-7209	2	Bolt
28	125-7211	4	Bolt
29	127-3177	2	Bolt

Exhaust Manifold Assembly

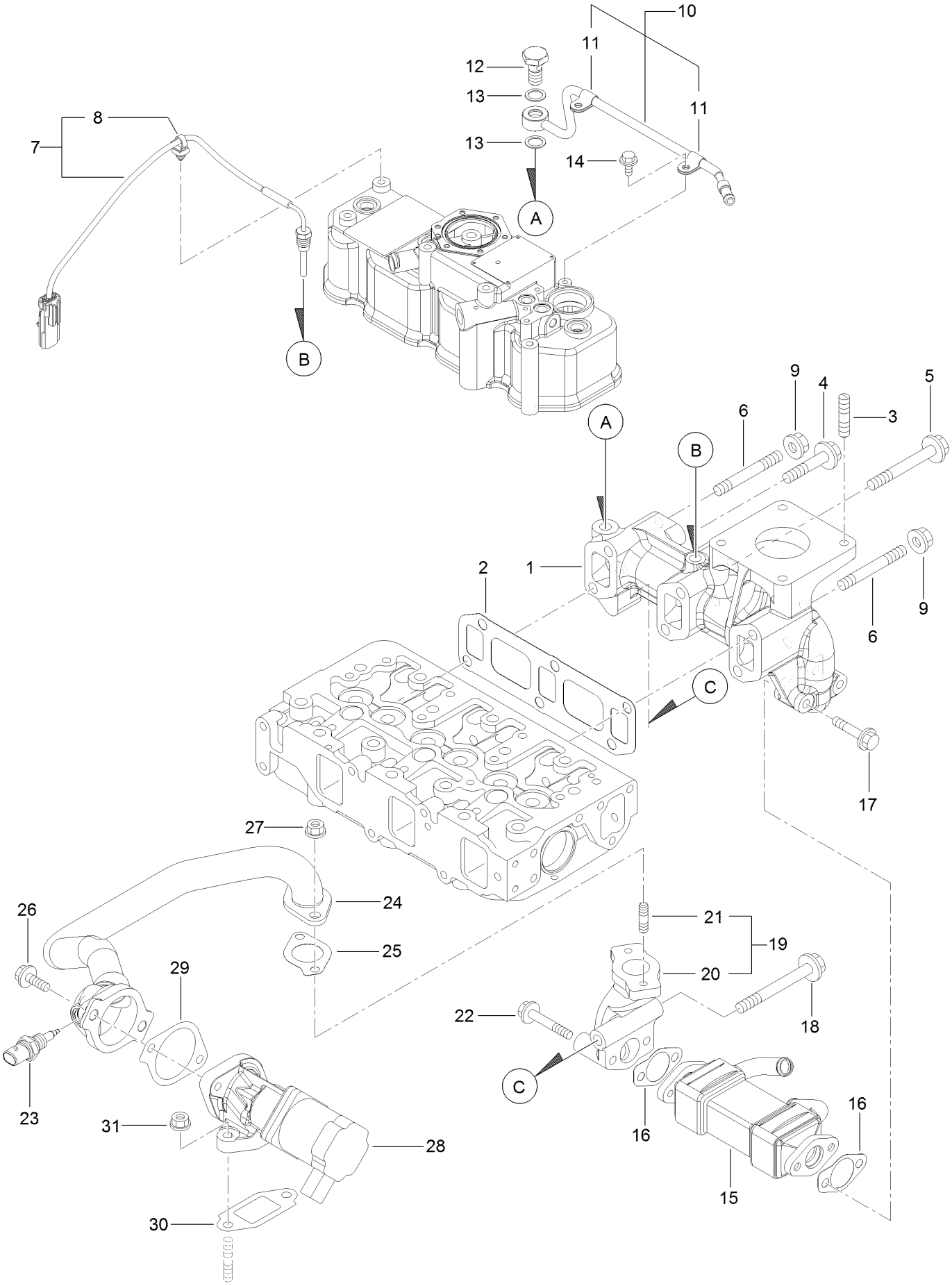

Exhaust Manifold Assembly (continued)

Ref.	Part Number	Qty.	Description
1	127-4726	1	Manifold-Exhaust
2	127-3775	1	Gasket-Manifold, Exhaust
3	127-2984	4	Stud
4	127-3094	1	Bolt
5	127-3044	3	Bolt-M10
6	127-4756	2	Stud
7	127-4729	1	Sensor-Temp, Exhaust
8	127-3087	1	Band-Clip
9	125-7230	2	Nut
10	127-3038	1	Exhaust Pipe ASM
11	127-3173	2	Clamp
12	127-3039	1	Bolt-Joint, Pipe
13	127-3174	2	Gasket
14	125-7206	2	Bolt
15	127-3042	1	Cooler-E G R
16	127-3043	2	Gasket-Cooler, E G R
17	127-2976	2	Bolt
18	127-3022	1	Bolt-Flange
19	127-3048	1	E G R Pipe ASM
20	127-3049	1	Pipe-Out, E G R
21	125-7043	2	Stud
22	125-7220	2	Bolt
23	127-3047	1	Sensor-Gas Temp, E G R
24	127-3780	1	E G R Pipe ASM
25	127-3016	1	Gasket
26	125-7215	2	Bolt
27	125-7229	2	Nut
28	127-3781	1	Valve-E G R
29	127-3050	1	Gasket-Intake Valve, E G R
30	127-3051	1	Gasket-Out Valve, E G R
31	125-7229	2	Nut

Diesel Particulate Filter Assembly

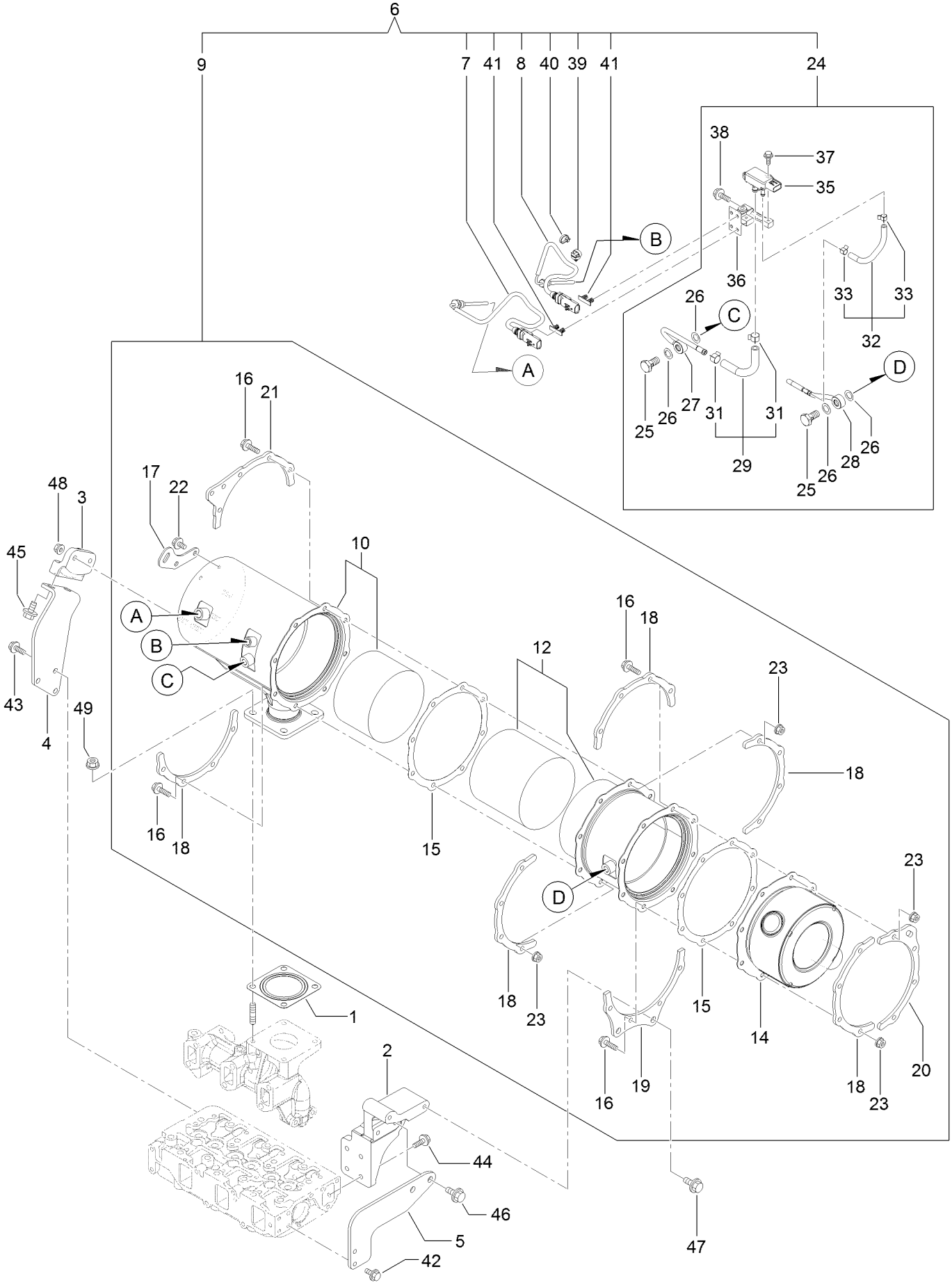

Diesel Particulate Filter Assembly (continued)

Ref.	Part Number	Qty.	Description
1	127-2987	1	Gasket-Silencer
2	127-4738	1	Stay-D P F
3	127-4739	1	Stay-D P F
4	127-4740	1	Stay-D P F
5	127-4741	1	Stay-D P F
6	127-4760	1	D P F Unit
7	127-4764	1	Sensor-Temp, Exhaust
8	127-4765	1	Sensor-Temp, Exhaust
9	127-4759	1	D P F ASM
10	127-4732	1	Case-D O C
12	127-4734	1	Case-Filter, Soot
14	127-3786	1	Silencer-D P F
15	127-3859	2	Gasket-D P F
16	127-3055	16	Bolt
17	127-3788	1	Lifter-D P F
18	127-3789	5	Stiffener-D P F, A
19	127-4735	1	Stiffener-D P F, B
20	127-3792	1	Stiffener-D P F, C
21	127-4736	1	Stiffener-D P F, C
22	125-7213	2	Bolt
23	125-7229	16	Nut
24	127-4743	1	Pressure Sensor Unit
25	127-3039	2	Bolt-Joint, Pipe

Ref.	Part Number	Qty.	Description
26	127-3056	4	Gasket-Sensor
27	127-4744	1	Sensor Pipe ASM
28	127-4745	1	Sensor Pipe ASM
29	127-4747	1	Exhaust Hose ASM
31	127-3057	2	Clip-Hose
32	127-4748	1	Exhaust Hose ASM
33	127-3058	2	Clip-Hose
35	127-3060	1	Sensor-Pressure
36	127-4750	1	Bracket-Sensor
37	125-7208	2	Bolt
38	125-7595	2	Bolt
39	127-3087	1	Band-Clip
40	127-3124	1	Band
41	127-3088	2	Clip-Connnector
42	100-6928	2	Bolt
43	100-6928	3	Bolt
44	130-7443	4	Bolt, M8 X 20 Plated
45	130-7444	2	Bolt
46	130-7444	2	Bolt
47	130-7444	2	Bolt
48	125-7229	2	Nut
49	125-7230	4	Nut

Camshaft and Driving Gear Assembly

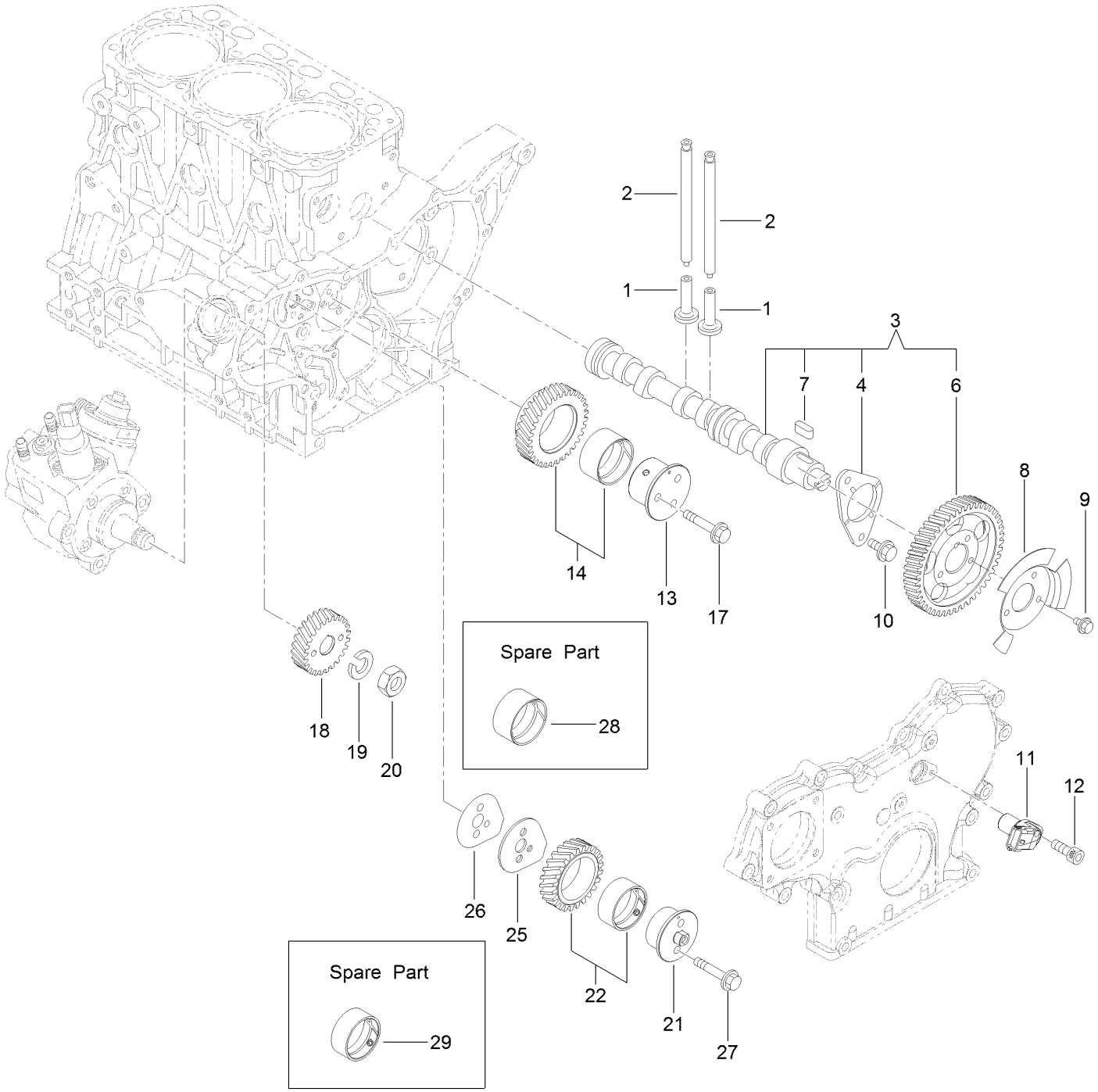

Camshaft and Driving Gear Assembly (continued)

Ref.	Part Number	Qty.	Description
1	125-7016	6	Tappet
2	125-7017	6	Rod-Push
3	127-3797	1	Camshaft ASM
4	125-7008	1	Metal-Thrust
6	127-3052	1	Gear-Camshaft
7	125-7185	1	Key
8	127-3053	1	Pulser-Camshaft
9	125-7205	3	Bolt
10	125-7213	2	Bolt
11	127-3054	1	Sensor-Rev, Gear
12	127-3184	1	Bolt
13	127-3063	1	Shaft-Idle, Gear A
14	127-3066	1	Idle Gear A ASM
17	125-7219	3	Bolt
18	127-3070	1	Gear-Pump, Supply
19	127-3167	1	Washer-Spring
20	127-3185	1	Nut-Lock
21	127-3064	1	Shaft-Idle, Gear B
22	127-3067	1	Idle Gear B ASM
25	127-3068	1	Plate-Idle, Shaft
26	127-3069	1	Gasket-Idle, Shaft B
27	125-7218	2	Bolt
28	125-6927	1	Bushing
29	127-3065	1	Bushing

Crankshaft and Piston Assembly

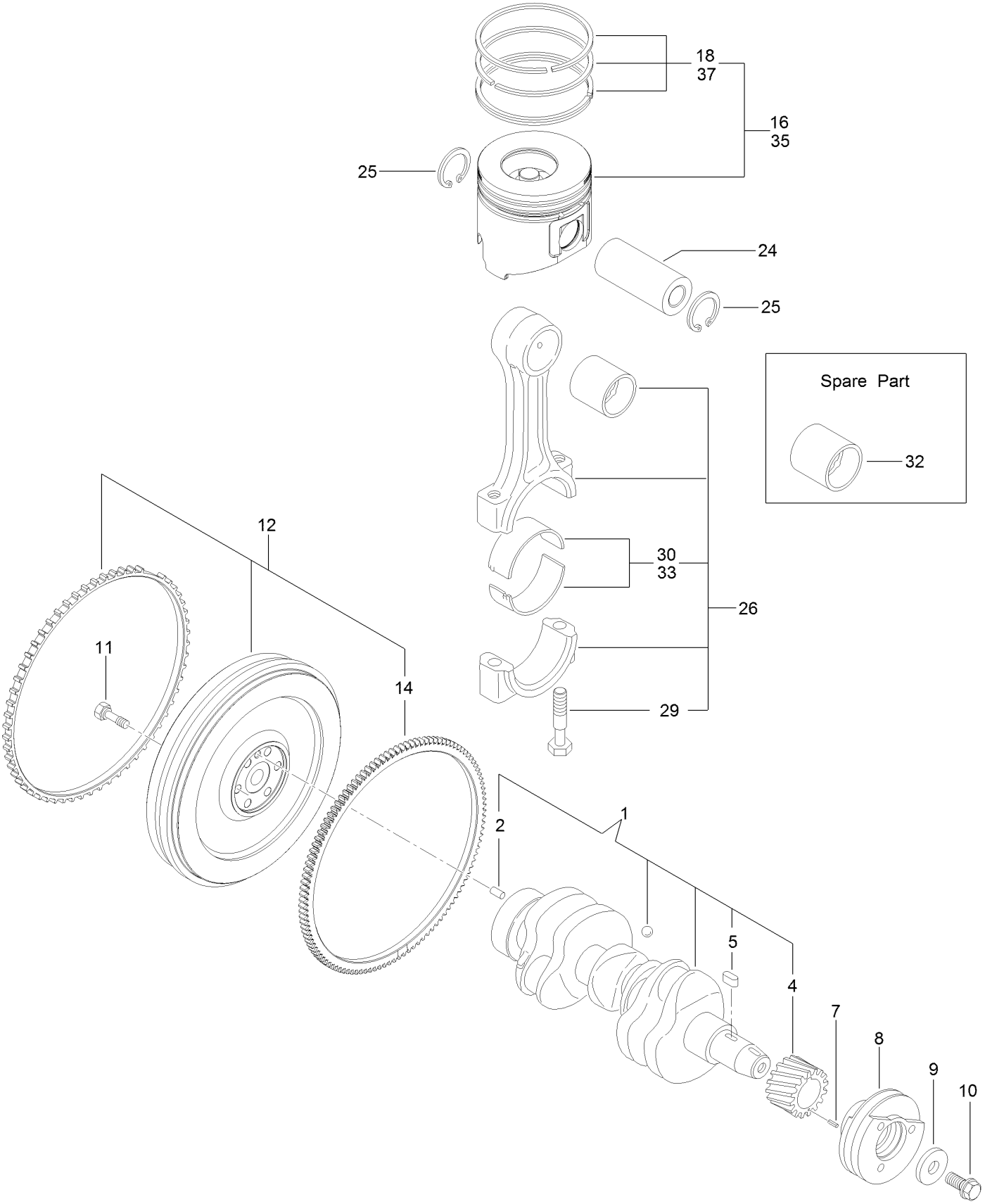

Crankshaft and Piston Assembly (continued)

Ref.	Part Number	Qty.	Description
1	127-3800	1	Crankshaft ASM
2	125-6995	1	Pin
4	125-6937	1	Gear
5	125-7185	1	Key
7	125-7182	1	Pin-Spring
8	127-3801	1	Pulley-V
9	125-7109	1	Washer
10	125-6956	1	Bolt
11	125-6951	6	Bolt
12	127-3802	1	Flywheel ASM
14	125-6943	1	Gear

Ref.	Part Number	Qty.	Description
16	127-4766	3	Piston ASM
18	127-4751	3	Piston Ring ASM
24	125-7030	3	Pin
25	125-7180	6	Ring
26	125-7242	3	Connecting Rod ASM
29	125-6955	6	Bolt
30	125-7018	3	Pin-Crank
32	125-6997	3	Pin-Piston
33	125-7019	3	Pin-Crank (.25)
35	127-4767	3	Piston ASM (0.25 O S)
37	127-4752	3	Ring Set (0.25 O S)

Lubrication and Oil System Assembly

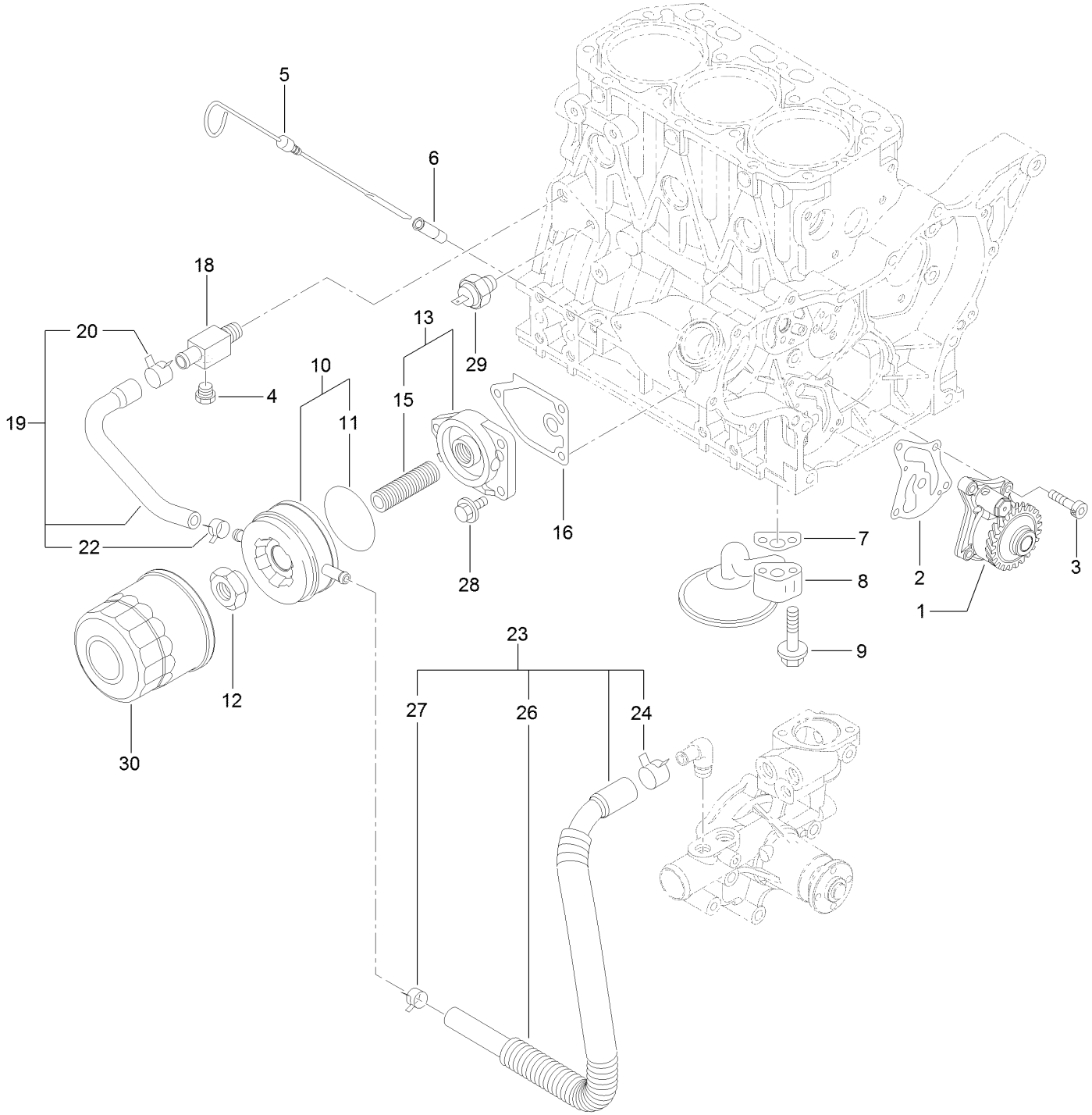

Lubrication and Oil System Assembly (continued)

Ref.	Part Number	Qty.	Description
1	127-4753	1	Oil Pump ASM
2	127-3004	1	Gasket
3	125-7232	4	Bolt
4	125-7171	1	Plug-Drain
5	125-6987	1	Dipstick
6	125-6954	1	Guide-Dipstick
7	125-7022	1	Gasket
8	127-3803	1	Pipe ASM
9	125-7217	2	Bolt
10	125-7074	1	Cooler ASM
11	125-7075	1	O-Ring
12	125-7041	1	Nut-Cooler, Oil
13	125-6989	1	Bracket ASM

Ref.	Part Number	Qty.	Description
15	125-7042	1	Stud
16	125-7024	1	Gasket
18	125-6990	1	Joint
19	125-7078	1	Pipe ASM
20	125-7162	1	Clip
22	125-7191	1	Clamp-Hose
23	127-3804	1	Pipe ASM
24	125-7162	1	Clip
26	127-3805	1	Tube
27	125-7191	1	Clamp-Hose
28	125-7595	3	Bolt
29	125-6918	1	Switch-Oil
30	125-7025	1	Filter-Engine

Cooling Water System Assembly

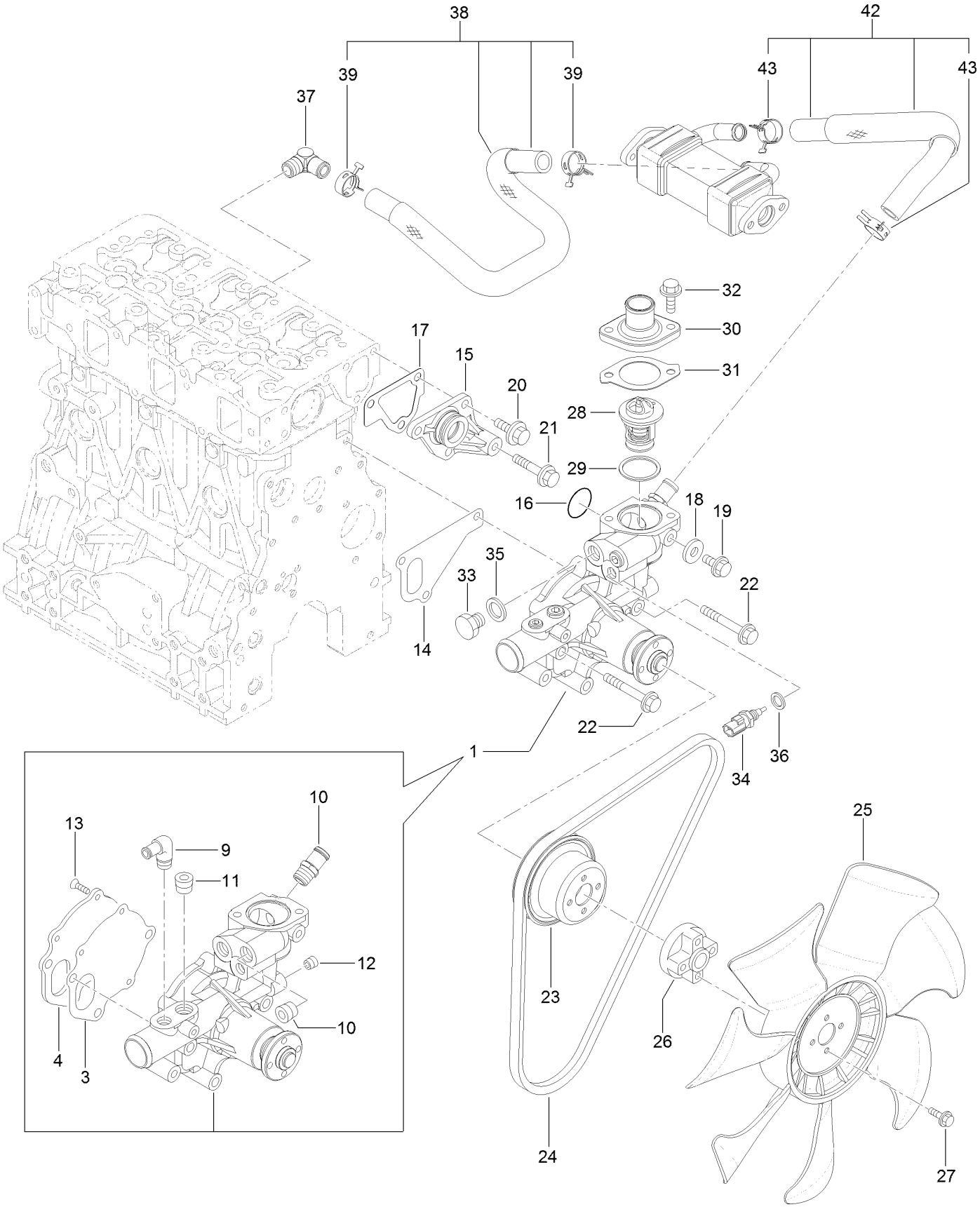

Cooling Water System Assembly (continued)

Ref.	Part Number	Qty.	Description
1	130-7442	1	Water Pump ASM
3	125-6998	1	Gasket
4	125-6999	1	Plate
9	127-3017	1	Joint
10	125-7123	2	Plug
11	127-3175	1	Plug
12	125-7195	1	Plug
13	125-7234	3	Screw
14	125-7047	1	Gasket
15	125-6986	1	Joint
16	125-7048	1	O-Ring
17	125-6978	1	Gasket
18	125-7192	1	Gasket
19	93-0362	1	Bolt
20	100-6928	3	Bolt
21	125-7219	1	Bolt
22	125-7222	3	Bolt
23	127-4712	1	V-Pulley

Ref.	Part Number	Qty.	Description
24	127-4771	1	V-Belt
25	127-4702	1	Fan
26	127-4768	1	Spacer
27	125-7211	4	Bolt
28	125-7029	1	Thermostat
29	125-7026	1	Gasket
30	125-7034	1	Cover
31	125-7110	1	Gasket
32	125-7594	2	Bolt
33	125-6953	1	Plug
34	125-7124	1	Sensor-Thermostat, CW
35	125-6979	1	Gasket
36	125-7176	1	Washer-Seal
37	127-4705	1	Elbow
38	127-4757	1	E G R-C Pipe ASM
39	127-3020	2	Clip-Hose
42	127-3811	1	CW Pipe ASM
43	127-3020	2	Clip-Hose

Fuel System Assembly

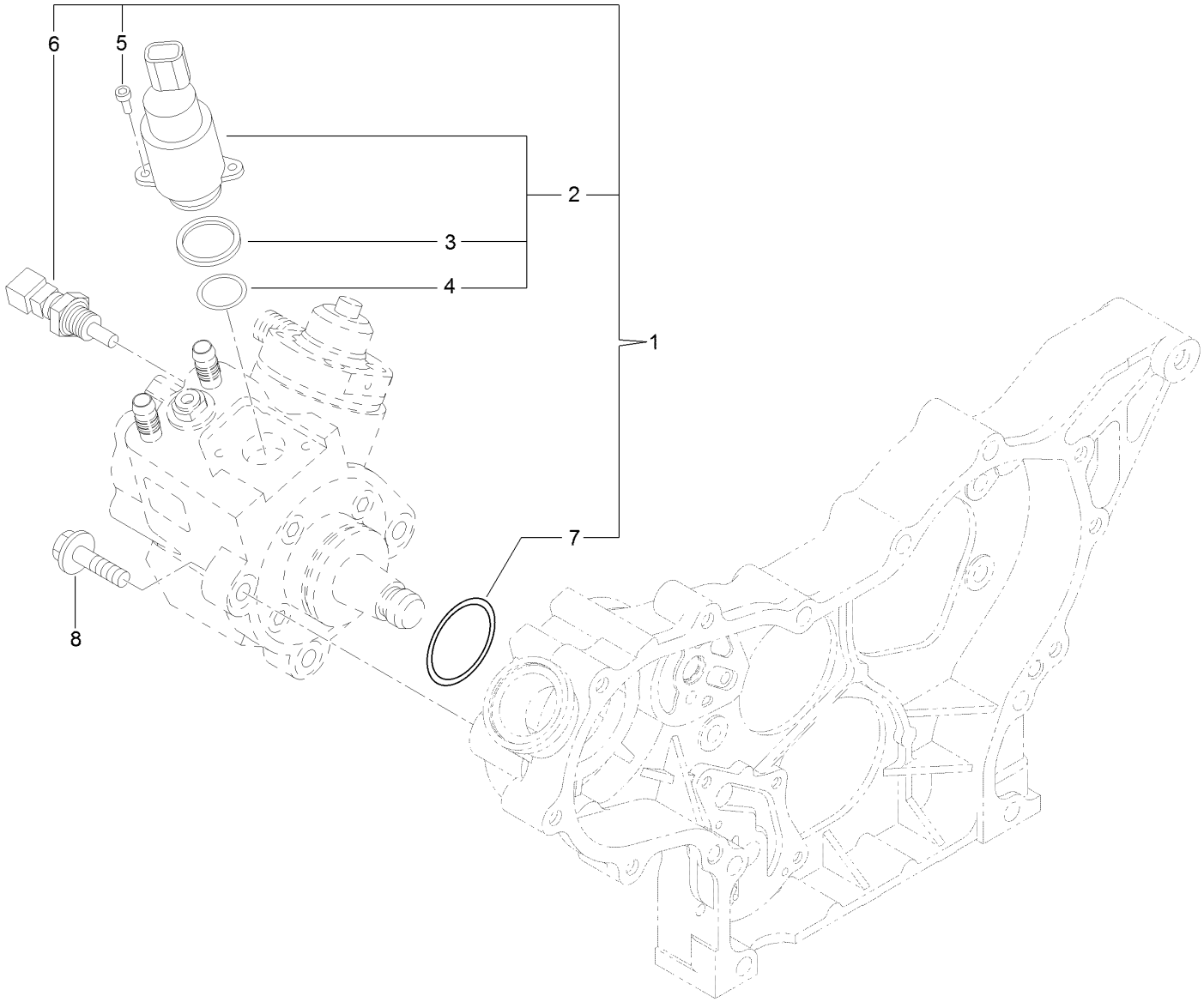

Fuel System Assembly (continued)

Ref.	Part Number	Qty.	Description
1	127-3073	1	Fuel Pump ASM
2	131-2103	1	Valve ASM
3	131-2105	1	Ring-Sealing
4	131-2106	1	O-Ring
5	131-2107	2	Bolt
6	131-2108	1	Sensor-Temperature
7	127-3074	1	O-Ring
8	125-7216	3	Bolt

Fuel Injection Valve Assembly

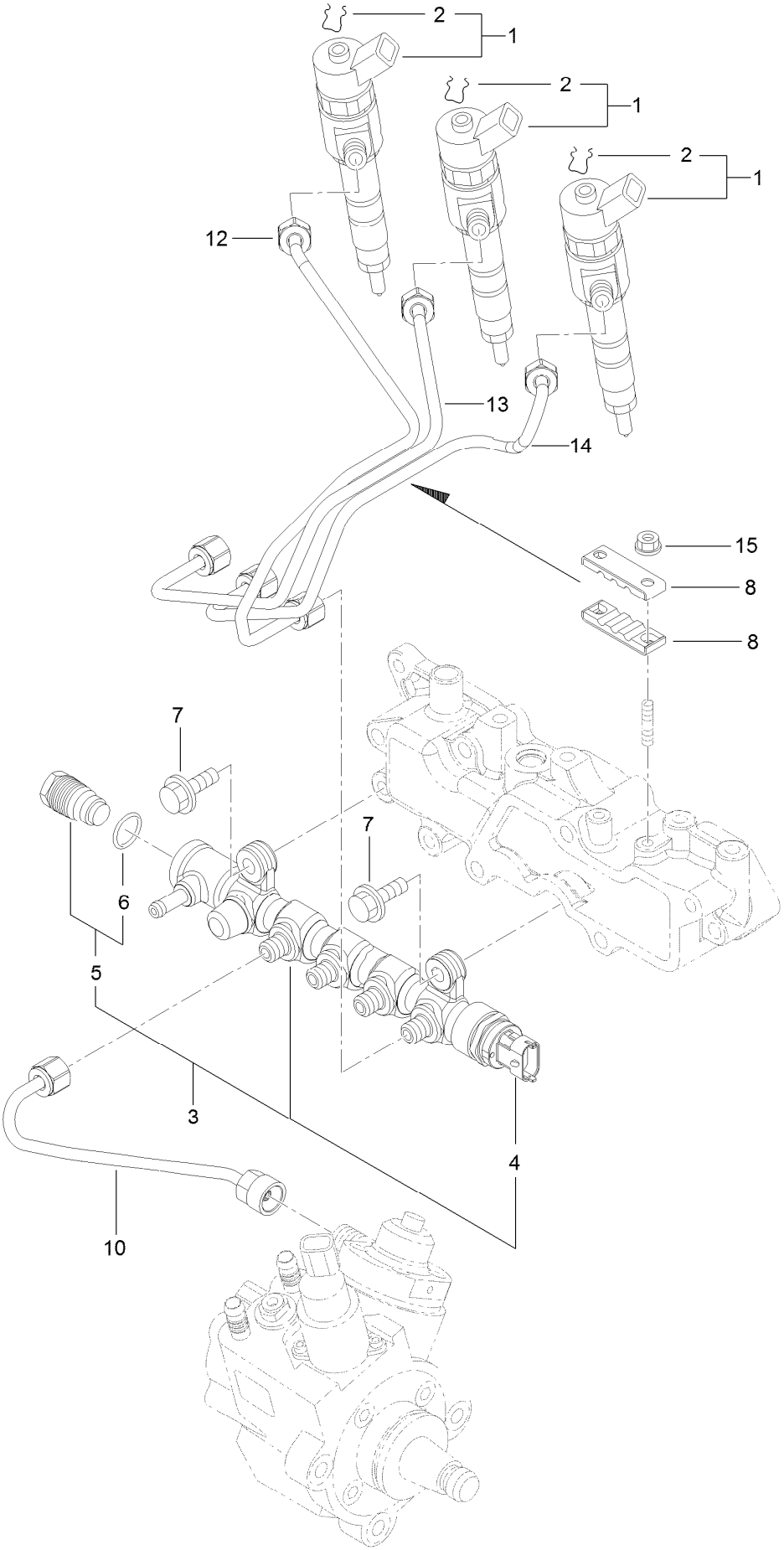

Fuel Injection Valve Assembly (continued)

Ref.	Part Number	Qty.	Description
1	127-4754	3	Injector ASM
2	130-7430	3	Ring-Retaining
3	127-3812	1	Rail ASM
4	130-7431	1	Sensor-Pressure, Rail
5	130-7432	1	Valve ASM
6	130-7433	1	O-Ring
7	125-7215	2	Bolt
8	127-3813	2	Retainer
10	127-3082	1	Rail In Pipe ASM
12	127-3814	1	Injection Pipe ASM
13	127-3083	1	Injection Pipe ASM
14	127-3084	1	Injection Pipe ASM
15	125-7231	2	Nut

Fuel Line Assembly

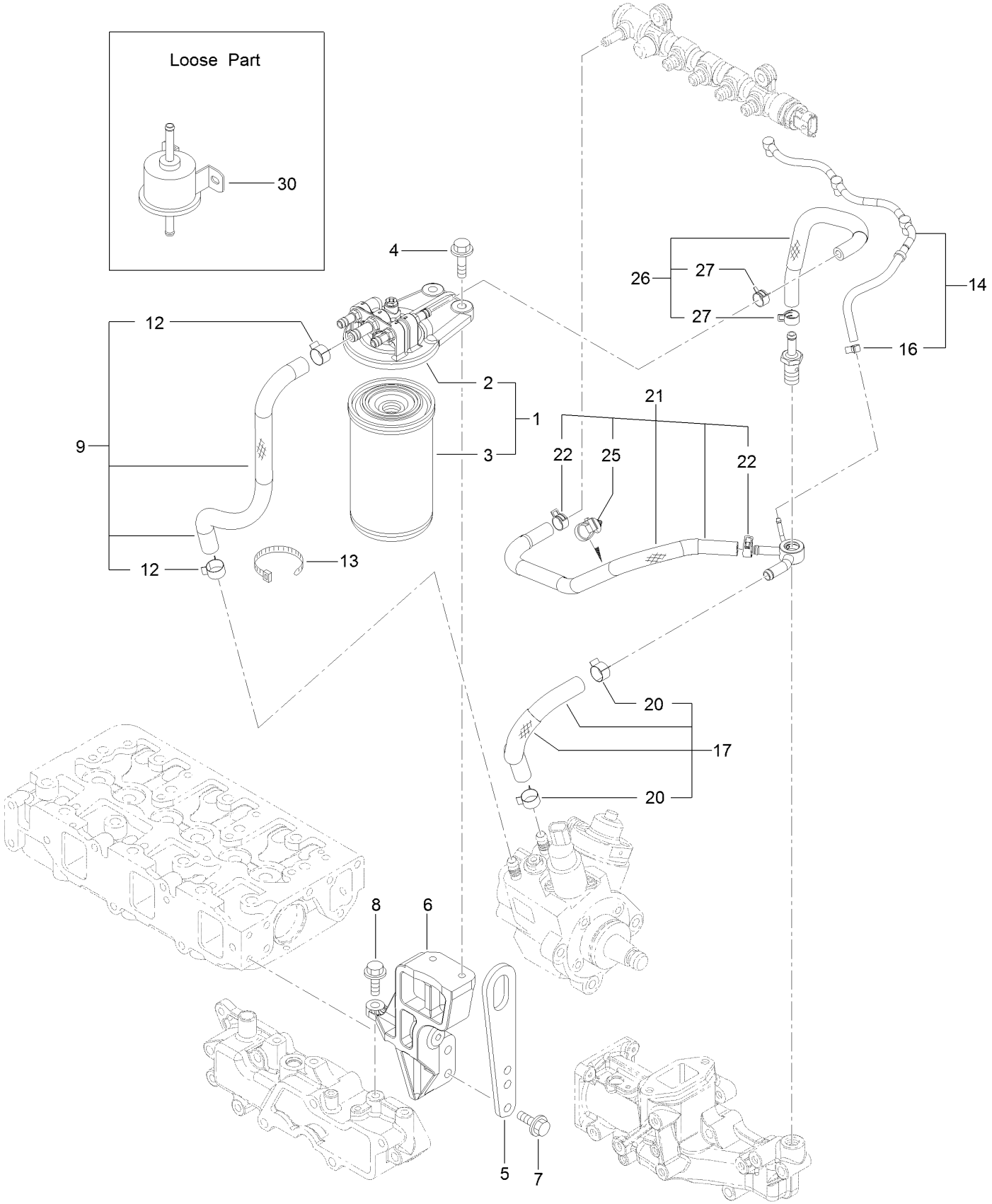

Fuel Line Assembly (continued)

Ref.	Part Number	Qty.	Description
1	127-3075	1	Fuel/Oil Filter ASM
2	127-3076	1	Fuel/Oil Filter Bracket ASM
3	125-8752	1	Filter-Fuel/Oil
4	125-7216	2	Bolt
5	125-7111	1	Lifter
6	127-3815	1	Filter Bracket ASM
7	125-7215	2	Bolt
8	125-7215	1	Bolt
9	127-3077	1	Fuel Pipe ASM
12	125-7191	2	Clamp-Hose
13	127-2981	1	Band
14	127-3816	1	Fuel/Oil Return Pipe ASM
16	127-3172	1	Clamp-Hose
17	127-3078	1	Fuel Pipe ASM
20	125-7191	2	Clamp-Hose
21	127-3817	1	Fuel Pipe ASM
22	127-2950	2	Clip-Hose
25	127-3087	1	Band-Clip
26	127-3079	1	Fuel Pipe ASM
27	127-2950	2	Clip-Hose
30	127-3008	1	Fuel Feed Pump ASM

Starting Motor Assembly

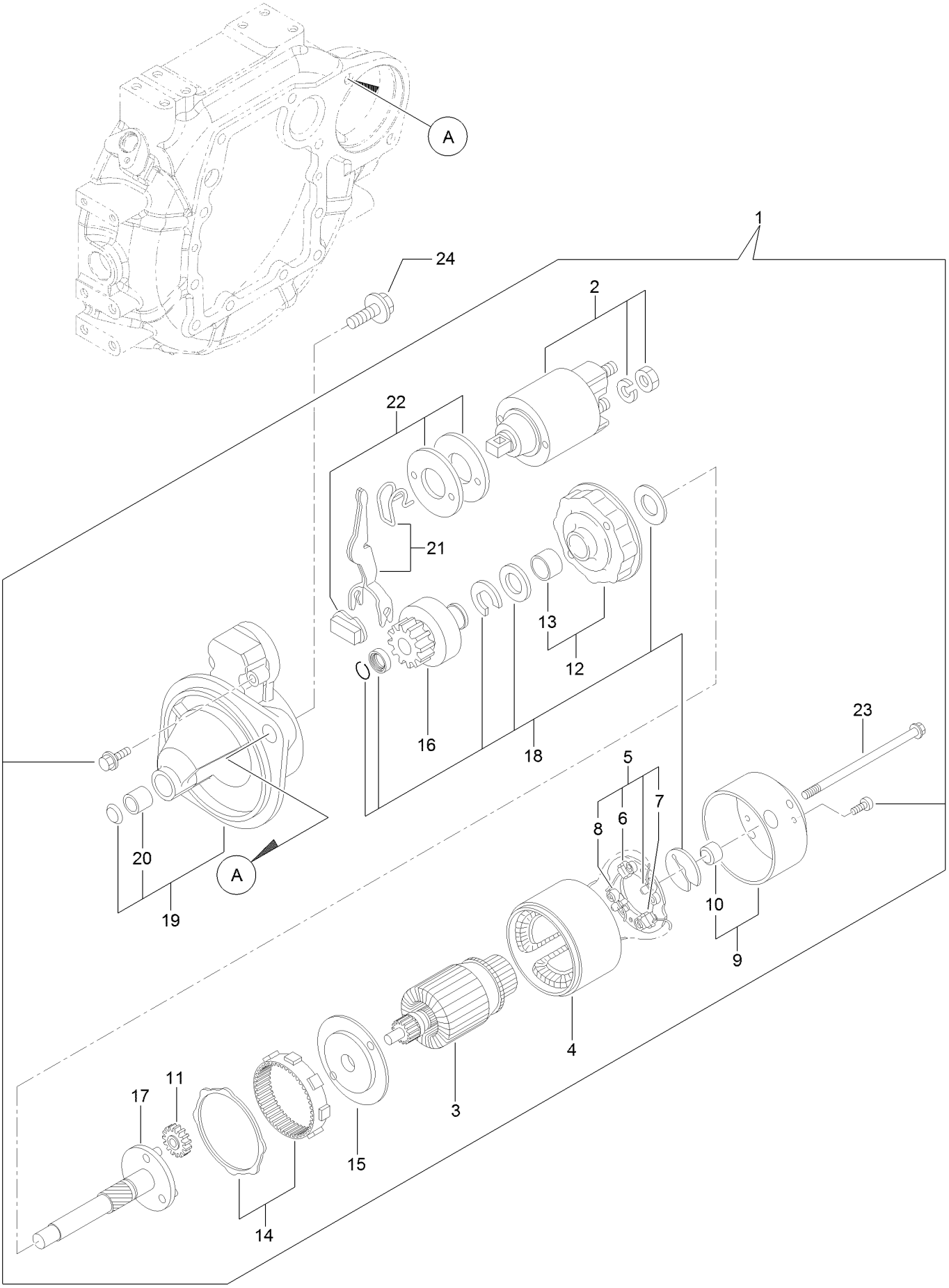

Starting Motor Assembly (continued)

Ref.	Part Number	Qty.	Description
1	127-3818	1	Starter ASM
2	127-3819	1	Switch ASM
3	127-3820	1	Armature ASM
4	127-3821	1	Yoke ASM
5	127-3822	1	Brush Holder ASM
6	127-3823	2	Brush
7	127-3824	1	Brush Set
8	127-3825	4	Spring
9	127-3826	1	Cover ASM
10	127-3827	1	Metal
11	127-3828	3	Gear
12	127-3829	1	Bracket
13	127-3830	1	Bracket
14	127-3831	1	Gear
15	127-3832	1	Bracket
16	127-3833	1	Pinion ASM
17	127-3834	1	Shaft
18	127-3835	1	Washer Set
19	127-3836	1	Case ASM
20	127-3837	1	Metal-Starter
21	127-3838	1	Lever Set
22	127-3839	1	Dust Cover ASM
23	127-3840	2	Bolt-Through
24	125-7225	2	Bolt

Generator Assembly

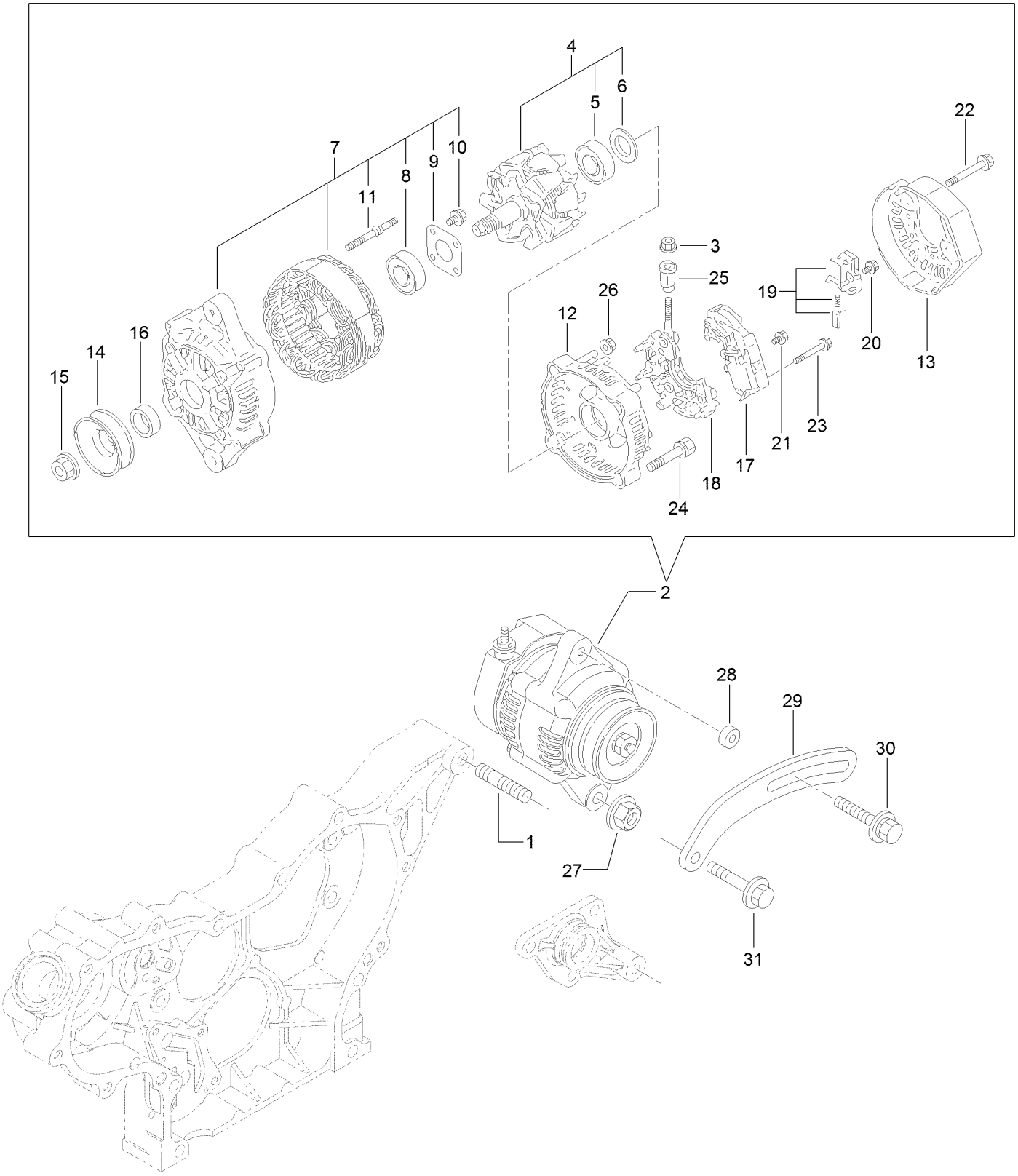

Generator Assembly (continued)

Ref.	Part Number	Qty.	Description
1	127-3011	1	Stud
2	127-3841	1	Generator
3	127-3190	1	Nut
4	127-3843	1	Rotor ASM
5	127-2983	1	Bearing-Ball
6	127-2962	1	Cover
7	127-3844	1	Frame ASM
8	127-2958	1	Bearing-Ball
9	127-2959	1	Plate-Retainer
10	127-2960	4	Screw
11	127-2961	2	Stud
12	127-3845	1	Frame
13	127-3846	1	Cover
14	127-2954	1	Pulley
15	127-2955	1	Nut
16	127-2957	1	Collar
17	127-3847	1	Regulator ASM
18	127-3848	1	Holder
19	127-2993	1	Holder
20	127-2965	6	Screw
21	127-2966	1	Screw
22	127-2967	3	Bolt
23	127-2968	2	Screw
24	127-2969	2	Bolt
25	127-2970	1	Bushing-Insulation
26	127-2971	2	Nut
27	125-7230	1	Nut
28	125-6947	1	Spacer
29	127-2977	1	Adjuster
30	125-7134	1	Bolt
31	125-7219	1	Bolt

Electronic Control Unit Assembly

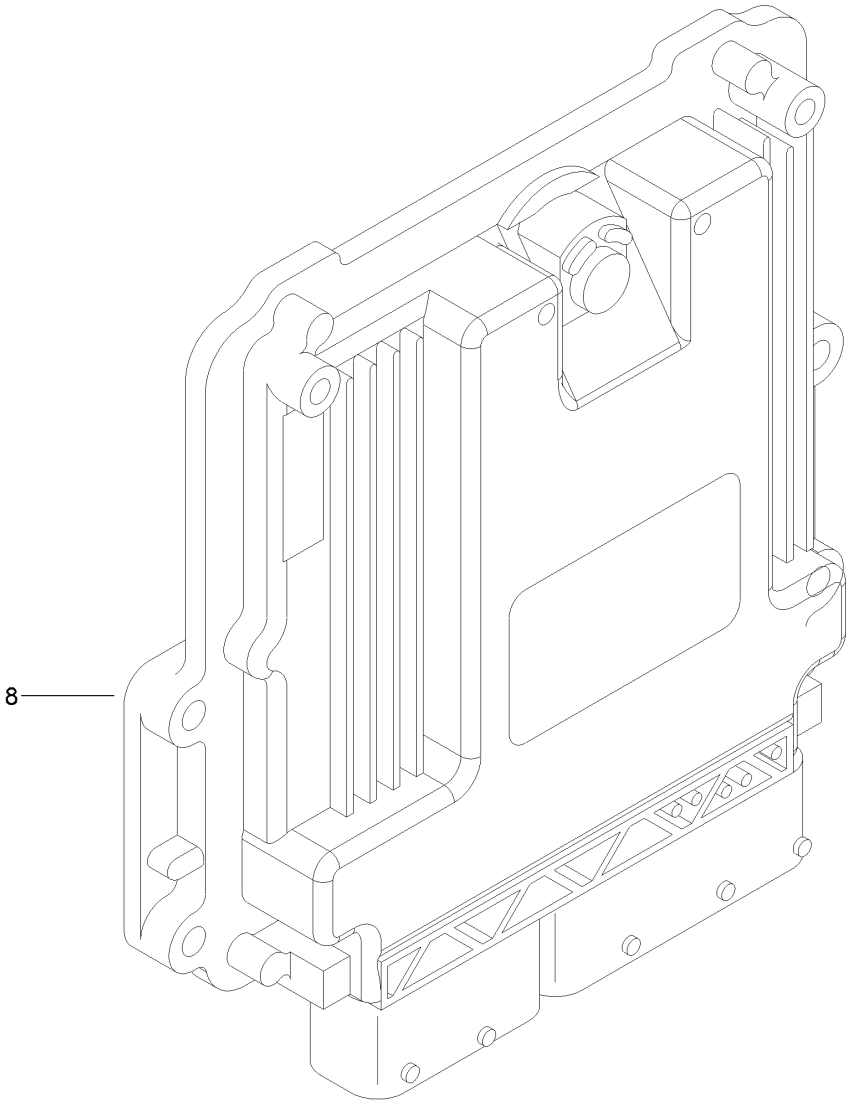

Electronic Control Unit Assembly (continued)

Ref.	Part Number	Qty.	Description
8	127-3085	1	E C U ASM

Electric Parts Assembly

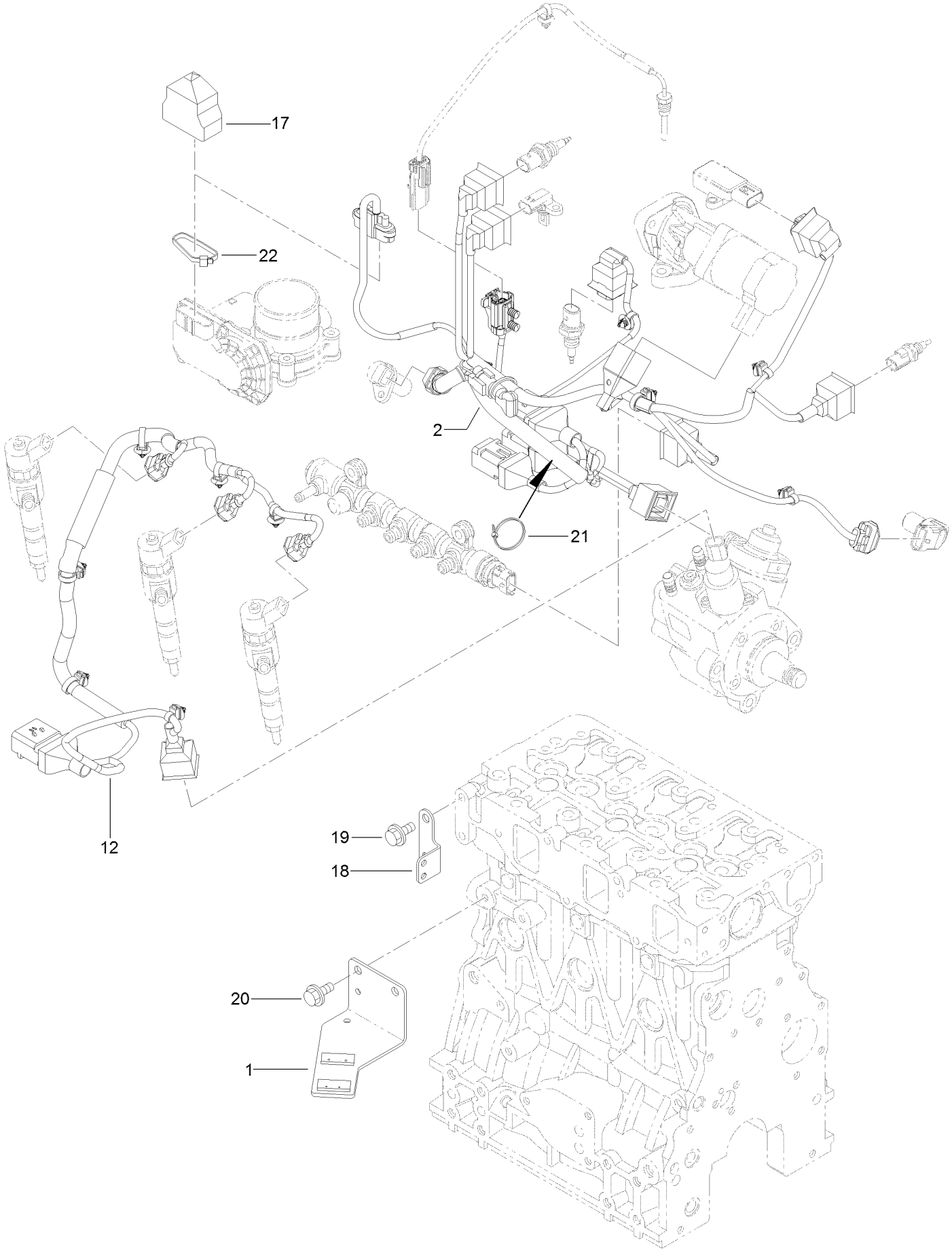

Electric Parts Assembly (continued)

Ref.	Part Number	Qty.	Description
1	130-7436	1	Bracket-Connector
2	130-7437	1	Harness B-Engine, E C O
12	130-7438	1	Harness
17	130-7439	1	Boot-Type, Cap
18	127-3090	1	Bracket-Harness
19	93-0362	2	Bolt
20	93-0362	2	Bolt
21	127-3187	1	Band
22	127-3188	1	Band

Gasket Set

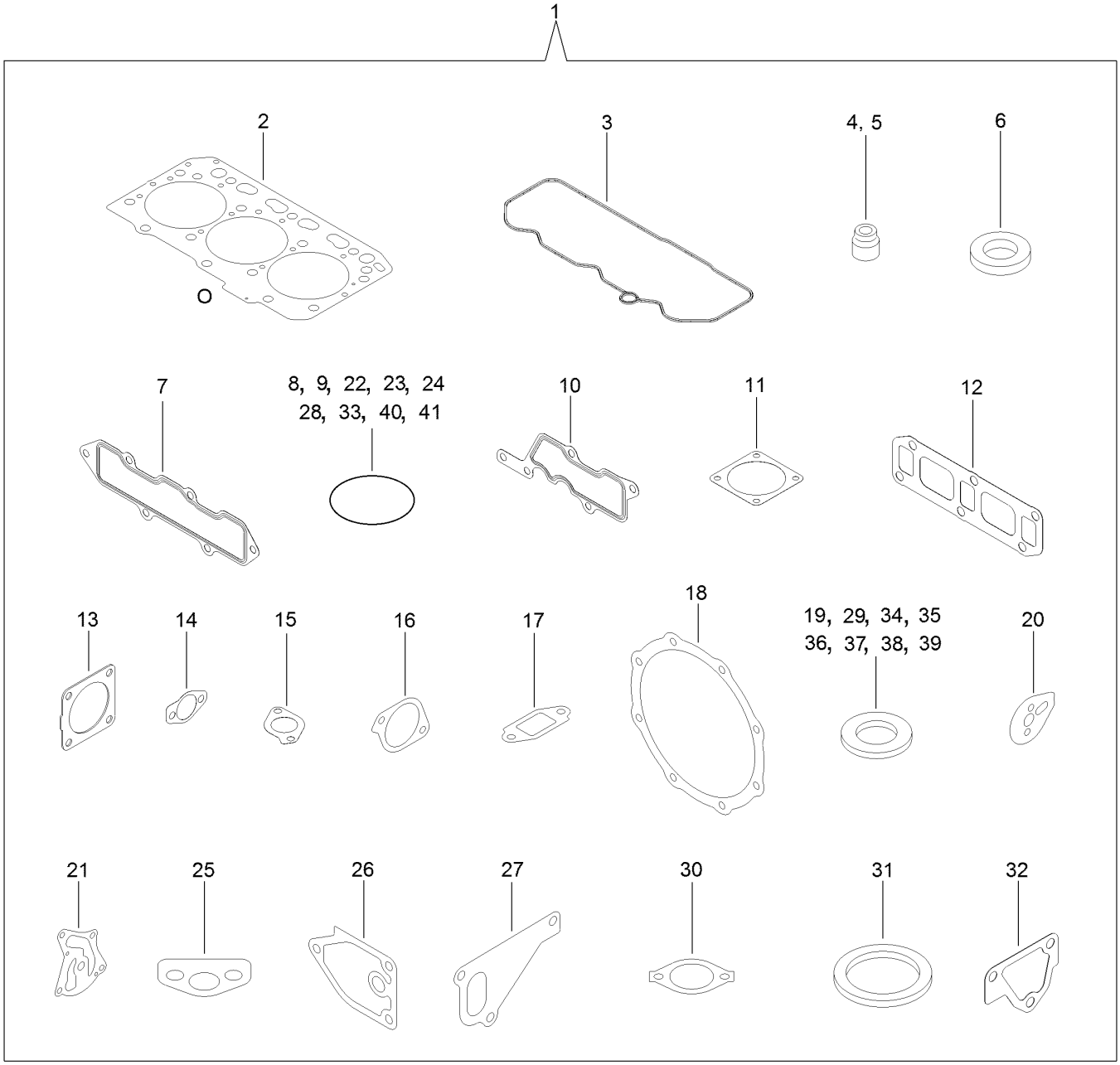
1
2
O
3
4, 5
6
7
8, 9, 22, 23, 24
28, 33, 40, 41
10
11
12
13
14
15
16
17
18
19, 29, 34, 35
36, 37, 38, 39
20
21
25
26
27
30
31
32

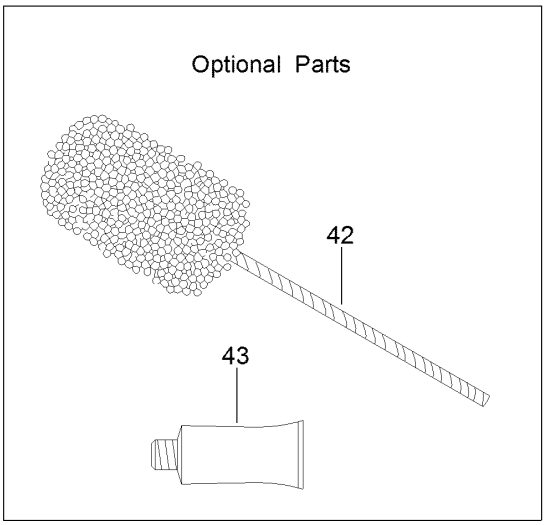
Optional Parts
42
43

Gasket Set (continued)

Ref.	Part Number	Qty.	Description
1	130-7440	1	Packing (Gasket Set)
2	127-4716	1	Head Gasket ASM
3	127-3856	1	Gasket-Valve Cover
4	127-2986	3	Seal-Stem, Valve
5	127-3027	3	Seal-Stem, Valve
6	127-3021	3	Gasket-Injector
7	127-3857	1	Gasket-Manifold, Intake
8	127-3032	2	O Ring-Sensor, Pressure
9	127-3033	1	O-Ring
10	127-3034	1	Gasket-Collector
11	127-3037	2	Gasket-Throttle
12	127-3775	1	Gasket-Manifold, Exhaust
13	127-2987	1	Gasket-Silencer
14	127-3043	2	Gasket-Cooler, E G R
15	127-3016	1	Gasket
16	127-3050	1	Gasket-Intake Valve, E G R
17	127-3051	1	Gasket-Out Valve, E G R
18	127-3859	2	Gasket-D P F
19	127-3056	4	Gasket-Sensor
20	127-3069	1	Gasket-Idle, Shaft B
21	127-3004	1	Gasket
22	125-6909	2	O-Ring
23	127-2973	1	O-Ring
24	125-7075	1	O-Ring
25	125-7022	1	Gasket
26	125-7024	1	Gasket
27	125-7047	1	Gasket
28	125-7048	1	O-Ring
29	125-6979	1	Gasket
30	125-7110	1	Gasket
31	125-7026	1	Gasket
32	125-6978	1	Gasket
33	127-3074	1	O-Ring
34	125-7174	1	Washer-Seal
35	125-7176	1	Washer-Seal
36	127-3166	2	Washer-Seal
37	125-7177	1	Washer-Seal
38	125-7192	1	Gasket
39	127-3174	2	Gasket
40	93-0418	3	O-Ring
41	125-7197	2	O-Ring
42	127-3000	1	Hone
43	125-7248	1	Gasket-Liquid

Attachments and Accessories

For 25403 Pro Sneak 365 Vibratory Plow

Product Name	Model/Part
Premium All Season Hydraulic Fluid (5 Gallon Pail)	108-1178
Premium All Purpose Grease (Tube)	108-1190
Premium All Season Gear Lube (Quart)	108-1590
Premium Heavy Duty All Season Gear Lube (Quart)	108-1591
Filter-air	108-3810
5in Air Cleaner Safety Element	114-4057
Premium Engine Oil 10w30 (55 Gallon Drum)	121-6392
Premium Engine Oil 10w30 (5 Gallon Pail)	121-6393
Engine Oil Filter	125-7025
Fuel Filter	125-8752
P40 Vibratory Plow	25402E
24in Crumber Kit	25404E
24in Boom	25406E
36in Boom	25408E
Trencher Drive	25411E
23in Tire Kit	25414E
26in Tire Kit	25416E
22in Reel Carrier	25419E
Hydra Borer	25421E
23in Dual Tire Kit	25423E
26in Dual Tire Kit	25424E
Wheel Weight Assembly	25426E

For 25403A Pro Sneak 365 Vibratory Plow

Product Name	Model/Part
P40 Vibratory Plow	25402
24in Crumber Kit	25404
24in Boom for Trencher	25406
36in Boom for Trencher	25408
Trencher Drive	25411
23in Tire Kit	25414
26in Tire Kit	25416
Hydra Borer	25418
22in Reel Carrier	25419
23in Dual Tire Kit	25423
26in Dual Tire Kit	25424

Notes:

TORO®

Count on it.