1969 - 1970 - 19 11

TORO®

We Take Care™

MODEL NO. 58100 – 900001 & UP;
000001 & UP;
100001 & UP

PARTS CATALOG

4 H.P. TILLER

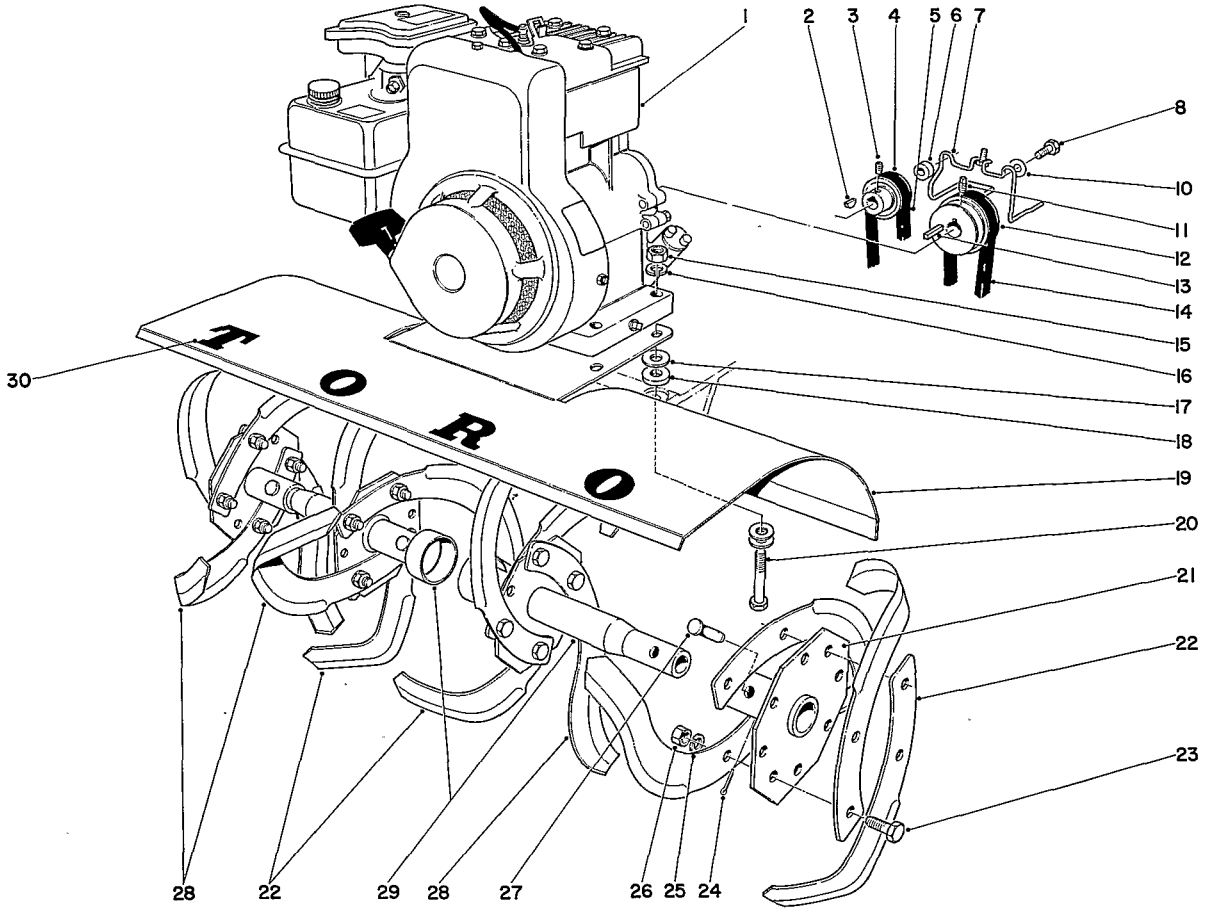

TINE AND ENGINE ASSEMBLY

Ref. No.	Part No.	Description	No. Used
1	221-272	Engine	1
2	3257-24	Key	1
3	3245-7	Set Screw	1
4	7-0071	Pulley	1
5	7-0074	Belt	1
6	2-0780	Spacer	2
7	7-0068	Belt Guide	1
8	321-11	Capscrew	2
10	3256-2	Washer	2
11	3246-2	Set Screw	1
12	7-0070	Engine Pulley	1
13	7-0036	Key	1
14	7-0073	Belt	1
15	3217-6	Nut	4
16	3253-4	Lockwasher	4

Ref. No.	Part No.	Description	No. Used
17	3256-3	Washer	12
18	7-0081	Washer Special	4
19	7-0072	Plant Shield	1
20	322-11	Capscrew	4
21	7-0105	Axle Hub	2
22	7-0103	Tine R. H.	8
23	323-6	Capscrew	16
24	3272-7	Cotter Pin	4
25	3253-21	Lockwasher	16
26	3217-7	Nut	16
27	7-2116	Pin Tine Drive	4
28	7-0102	Tine L. H.	8
29	7-0104	Axle Hub	2
30	7-8940	Decal	1

Copyright 1970 By
Toro Manufacturing Corporation
Minneapolis, Minnesota 55420 U.S.A.

Price $1.00

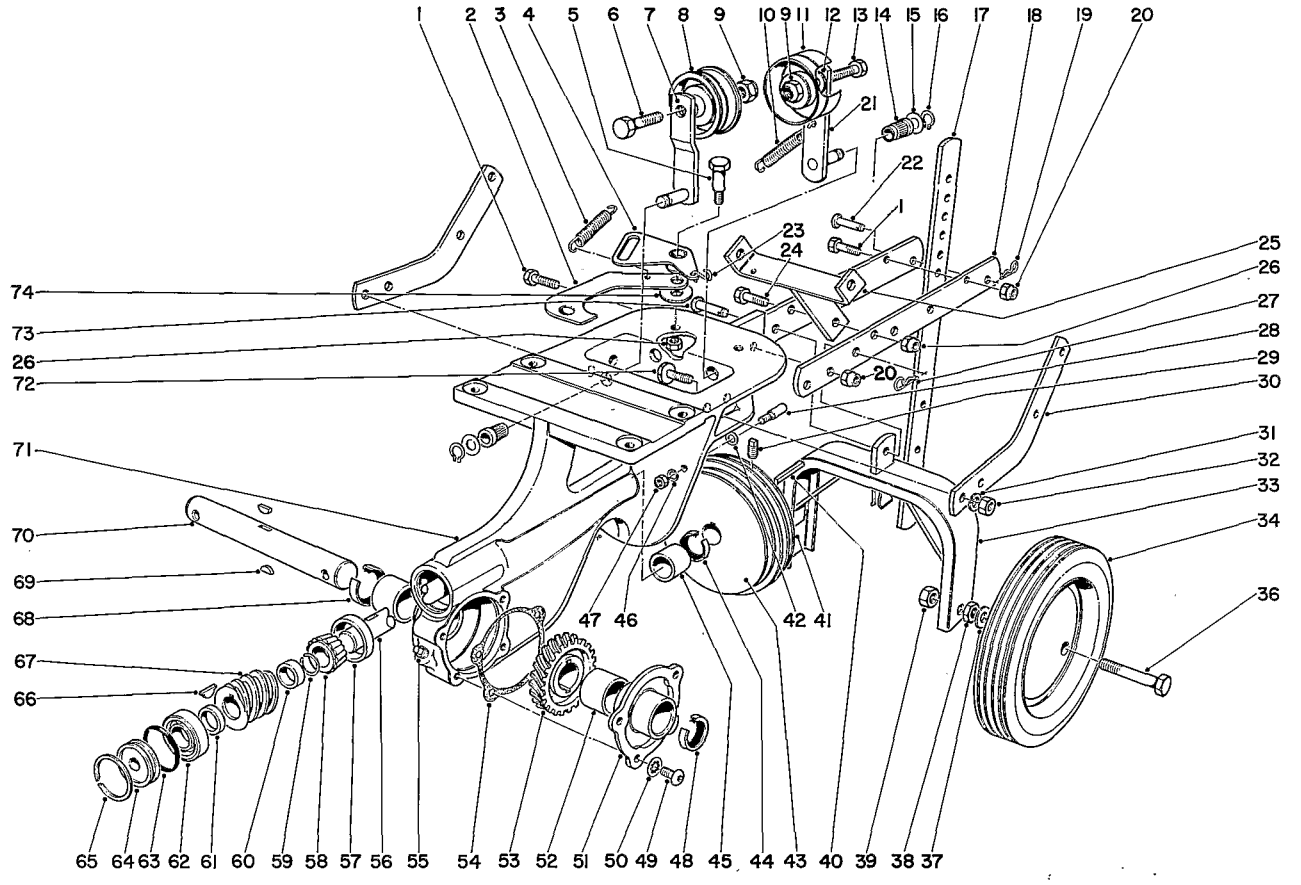

CHASSIS ASSEMBLY

Ref. No.	Part No.	Description	No. Used
1	323-8	Capscrew	3
2	7-0028	Reverse Link	1
3	7-1322	Spring Reverse Return	1
4	7-0027	Bell Crank	1
5	7-0030	Shoulder Bolt	1
6	323-8	Capscrew	1
7	7-0055	Idler Arm	1
8	7-0056	Idler Pulley	1
9	32152-2	Nut	2
10	7-0025	Spring	1
11	7-0051	Pulley	1
12	7-0052	Washer	2
13	323-9	Capscrew	1
14	7-0023	Bearing	2
15	7-0024	Washer	2
16	32120-35	Snap Ring	2
17	7-0076	Depth Gauge	1
18	7-0037	Draw Bar	2

Ref. No.	Part No.	Description	No. Used
19	3290-255	Hair Pin	1
20	32152-2	Nut	3
21	7-0050	Idler Arm	1
22	7-0040	Clevis Pin	1
23	7-3618	S-Hook	1
24	322-7	Capscrew	2
25	7-0041	Support Handle Bar	1
26	32152-1	Nut	3
27	3290-255	Hair Pin	1
28	7-0031	Belt Guide	2
29	3246-2	Set Screw	2
30	7-0033	Handle Bracket	2
31	3253-21	Lockwasher	4
32	3217-7	Nut	4
33	7-0038	Wheel Bracket	1
34	7-0075	Wheel Assy.	2
36	7-3552	Axle	2
37	3256-6	Washer	2

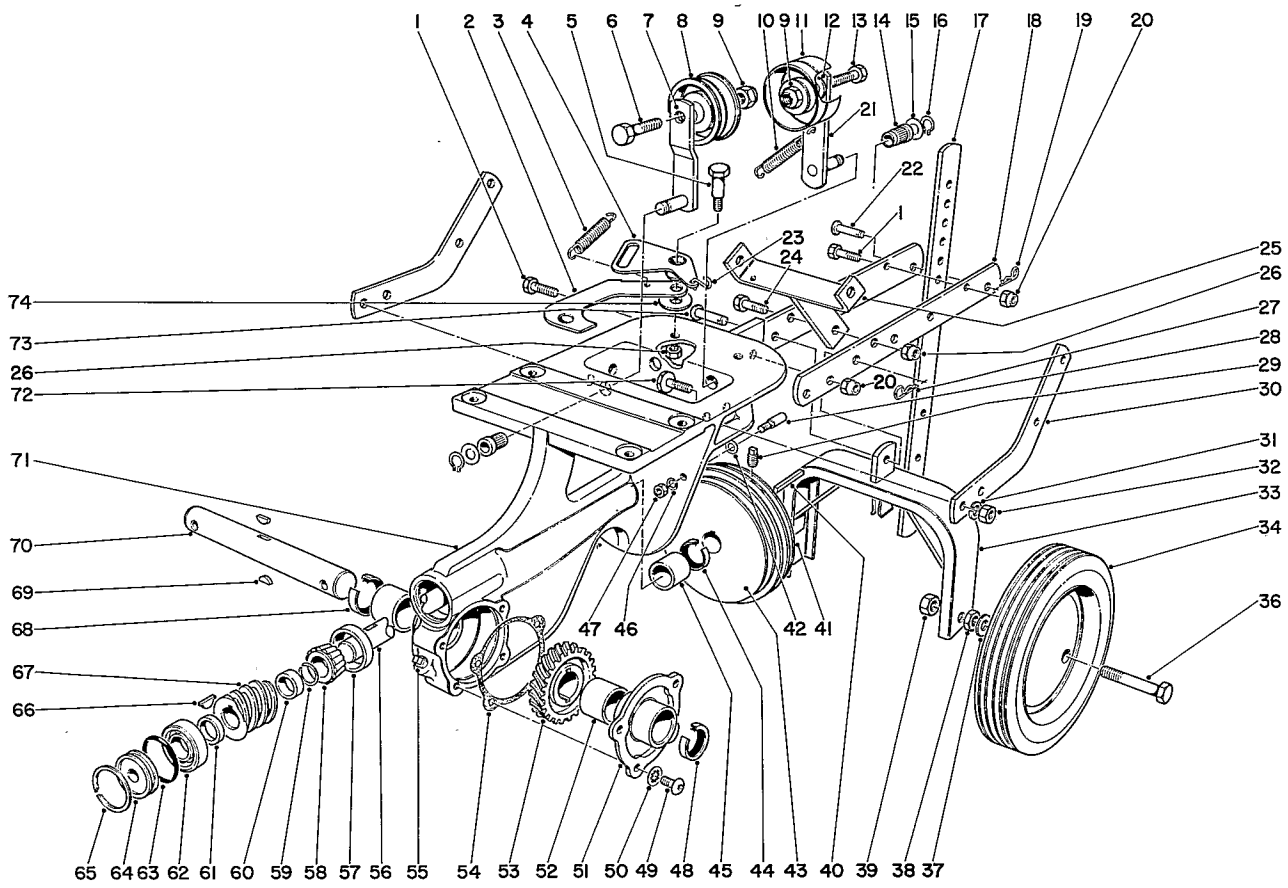

CHASSIS ASSEMBLY

Ref. No.	Part No.	Description	No. Used
38	3218-5	Nut	2
39	32152-3	Nut	2
40	7-0036	Key	1
41	7-0035	Pulley - Worm Shaft	1
42	3256-16	Washer	2
43	7-0034	Pulley - Reverse Worm Shaft	1
44	7-0044	Oil Seal	1
45	256-167	Bearing	1
46	3255-7	Lockwasher	4
47	3218-1	Nut	2
48	7-0045	Oil Seal	1
49	3274-31	Screw Button Hd.	4
50	3254-8	Washer	4
51	7-0048	Cover	1
52	252-52	Bearing	2
53	7-0047	Worm Gear	1
54	7-0020	Gasket	1
55	281-1	Pipe Plug	1
56	7-0012	Worm Shaft	1

Ref. No.	Part No.	Description	No. Used
57	254-89	Bearing Cup	1
58	254-88	Bearing Cone	1
59	7-0013	Snap Ring	1
60	7-0014	Spacer - Rear	1
61	7-0015	Spacer - Front	1
62	251-207	Bearing	1
63	237-71	O-Ring	1
64	7-0017	Plug	1
65	7-0018	Snap Ring	1
66	3257-23	Woodruff Key	1
67	7-0016	Worm	1
68	7-0045	Oil Seal	1
69	2357-33	Woodruff Key	2
70	7-0046	Shaft	1
71	7-0043	Chassis	1
72	32141-102	Leveler Hd.	4
73	7-0040	Clevis Pin	1
74	7-0032	Washer	1

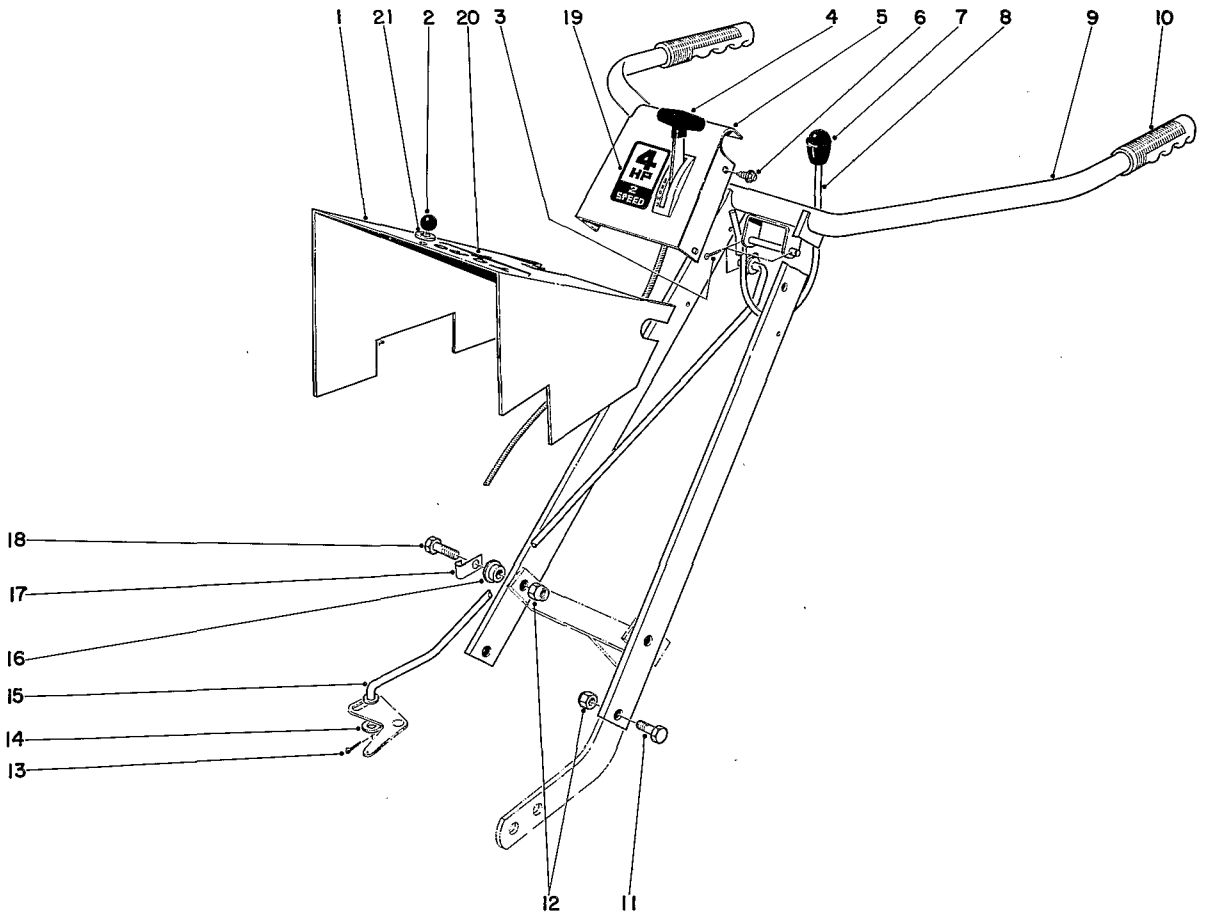

HANDLE ASSEMBLY

Ref. No.	Part No.	Description	No. Used
1	7-0080	Pulley Cover	1
2	233-17	Knob	1
3	3272-7	Cotter Pin	2
4	7-3362	Throttle Control	1
5	7-3365	Cover Handle	1
6	32104-77	Self-Tapping Screw	4
7	233-18	Knob	1
8	7-0088	Shift Lever	1
9	7-0087	Handle Bar	1
10	235-17	Handle Grip	2
11	322-5	Capscrew	2

Ref. No.	Part No.	Description	No. Used
12	32152-1	Nut	4
13	3272-7	Cotter Pin	2
14	7-0052	Flat Washer	1
15	7-0078	Clutch Rod	1
16	7-2041	Spacer	2
17	7-0077	Cable Clip	1
18	322-7	Capscrew	2
19	7-4341	Decal	1
20	5-1508	Decal	1
21	3256-2	Washer	1

ENGINE MODEL NO. 100292

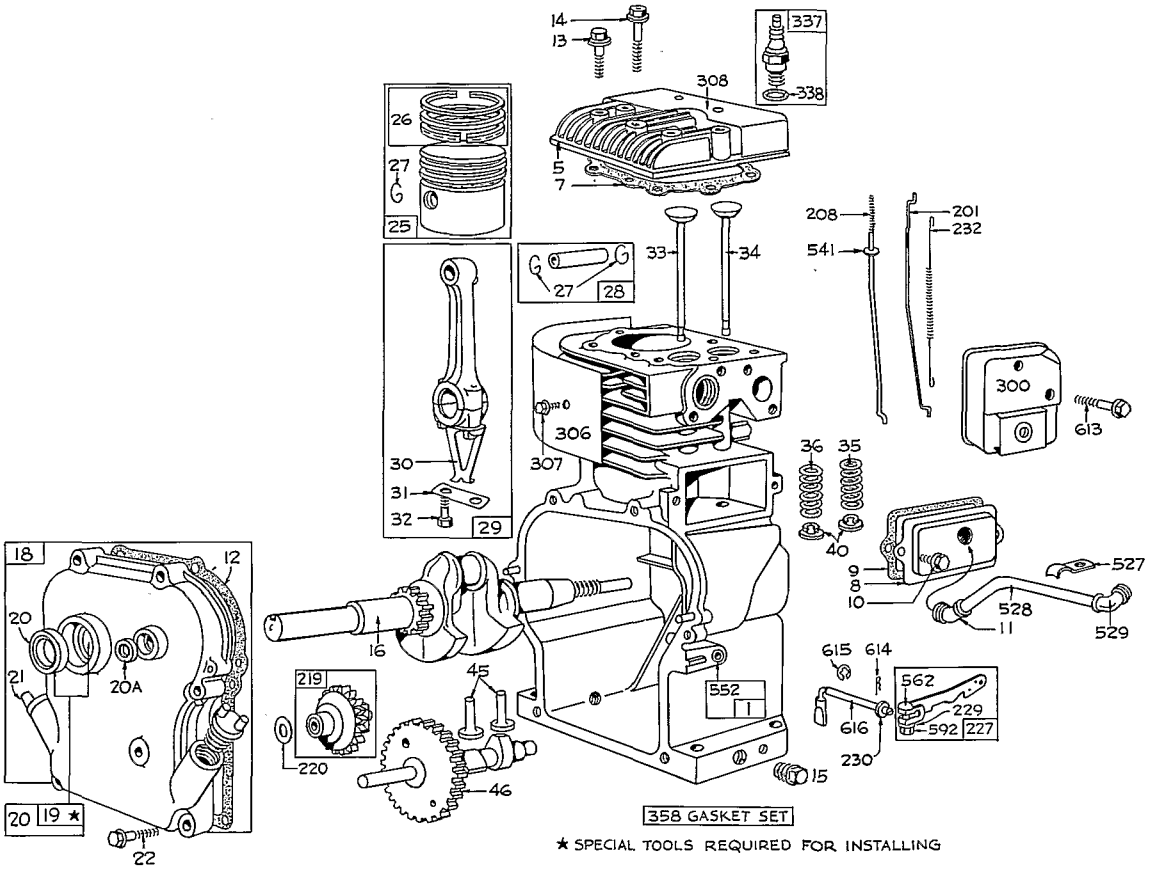

PARTS LIST

Ref. No.	Part No.	Description	No. Used
1	297566	Cylinder Assembly	1
5	211127	Head - Cylinder	1
7	**270383	Gasket - Cylinder Head	1
8	294178	Breather - Valve Chamber	1
9	**27549	Gasket - Valve Cover	1
10	93394	Screw - Breather Mounting Sem	1
11	65786	Grommet - Breather Tube	1
12	**270080	Gasket - Crankcase - .015" Thick (Standard)	1
13	93368	Screw - Cylinder Head	1
14	93369	Screw - Cylinder Head	1
15	91249	Plug - Pipe, Square Hd.	1
16	260719	Crankshaft	1
18	298183	Cover Assy., - Crankcase	1
*19	297603	Bushing - Crankcase Cover	1
20	294606	Seal - Oil	1
20A	298041	Seal - Oil. Used on the Auxiliary P.T.O.	1
21	66768	Plug - Oil Filler	1
22	93032	Screw - Crankcase Cover Mounting Sem	1
25	298168	Piston Assy. (Standard)	1
	298169	Piston Assy. (.010 oversize)	1
	298170	Piston Assy. (.020 oversize)	1
	298171	Piston Assy. (.030 oversize)	1

**Included in Gasket Set - Part No. 297615

Ref. No.	Part No.	Description	No. Used
26	298174	Ring Set - Std. Piston, consists of:	
		211297 Ring, Piston, Comp., Top, 5/64" wide	
		211298 Ring, Piston, Compression Center, 5/64" wide	
		211299 Ring, Piston, Oil	1
	298175	Ring Set - .010" O.S. Piston, consists of:	
		211353 Ring, Piston, Comp., Top, .010" O.S., 5/64" wide	
		211352 Ring, Piston, Compression, Center, .010" O.S. 5/64" wide	
		211351 Ring, Piston, Oil, .010" O.S.	
	298176	Ring Set - .020" O.S. Piston, Consists of:	
		211357 Ring, Piston, Comp., Top, .020" O.S., 5/64" wide	
		211356 Ring, Piston, Compression, Center, .020 O.S., 5/64" wide	
		211355 Ring, Piston, Oil, .020" O.S.	

ENGINE MODEL NO. 100292 (Continued)

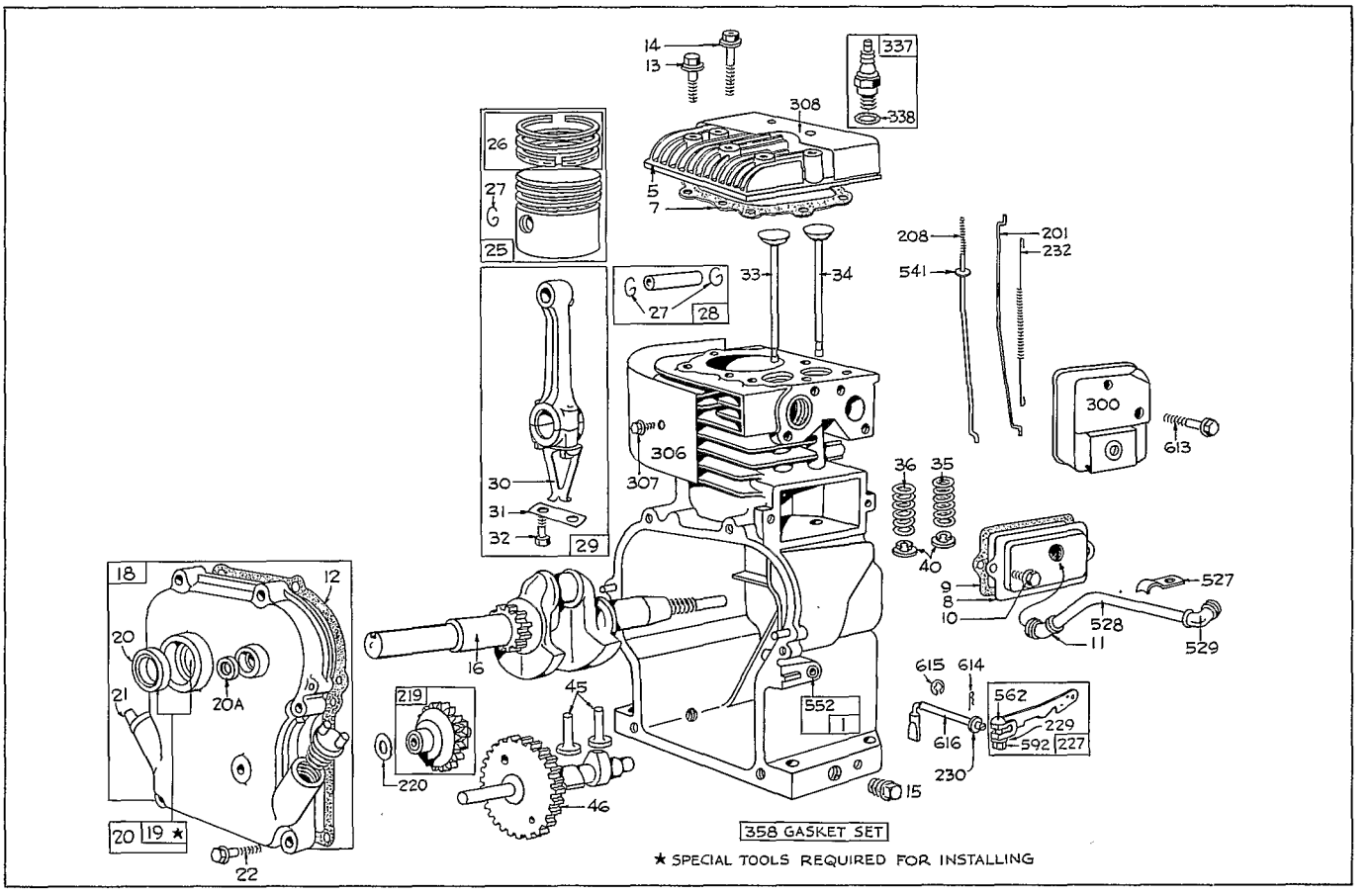

PARTS LIST

Ref. No.	Part No.	Description	No. Used
	298177	Ring Set - .030" O.S. Piston, consists of: 211361 Ring, Piston, Comp., Top, .030" O.S., 5/64" wide 211360 Ring, Piston, Compression, Center, .030" O.S., 5/64" wide 211359 Ring, Piston, Oil, .030" O.S.	
27	260645	Lock - Piston Pin	
28	297581	Pin Assy., - Piston - Standard	1
	297582	Pin Assy., - Piston - .005" O.S.	1
29	297569	Rod Assy., - Connecting	1
30	221786	Dipper - Connecting Rod	1
31	221741	Lock - Connecting Rod Screw	1
32	93450	Screw - Connecting Rod	1
33	211119	Valve - Exhaust	1
34	260961	Valve - Intake	1
35	260552	Spring - Intake Valve	1
36	26478	Spring - Exhaust Valve	1
40	93312	Retainer - Valve Spring	1
45	260642	Tappet - Valve	1
46	211284	Gear - Cam	1
201	260661	Link - Governor	1
208	230737	Rod - Control	1

Ref. No.	Part No.	Description	No. Used
219	297656	Gear - Governor	1
220	221551	Washer - Thrust	1
227	297601	Lever Assy., Governor	1
229	220680	Washer - Gov. Lever	1
230	221559	Washer - Governor Lever	1
232	260478	Spring - Governor Link	1
300	297506	Muffler - Exhaust	1
306	221511	Shield - Cylinder	1
307	93042	Screw - Cylinder Shield Mounting Sem	1
308	221512	Cover - Cylinder Head	1
337	298809	Plug - Spark (with Gasket)	1
338	29806	Gasket - Spark Plug	1
358	297615	Gasket Set	1
527	221514	Clamp - Breather Tube	1
528	230722	Tube - Breather	1
529	67838	Grommet - Breather Tube	1
541	22398	Washer	1
552	230732	Bushing - Governor	1
562	92613	Bolt - Governor Lever	1
592	90356	Nut - Hex.	1
613	93377	Screw - Muffler Mtg.	1
614	93306	Cotter - Hair Pin	1
615	93307	Retainer E - Ring	1
616	230723	Crank - Governor	1

REWIND STARTER ASSEMBLY AND PARTS LIST

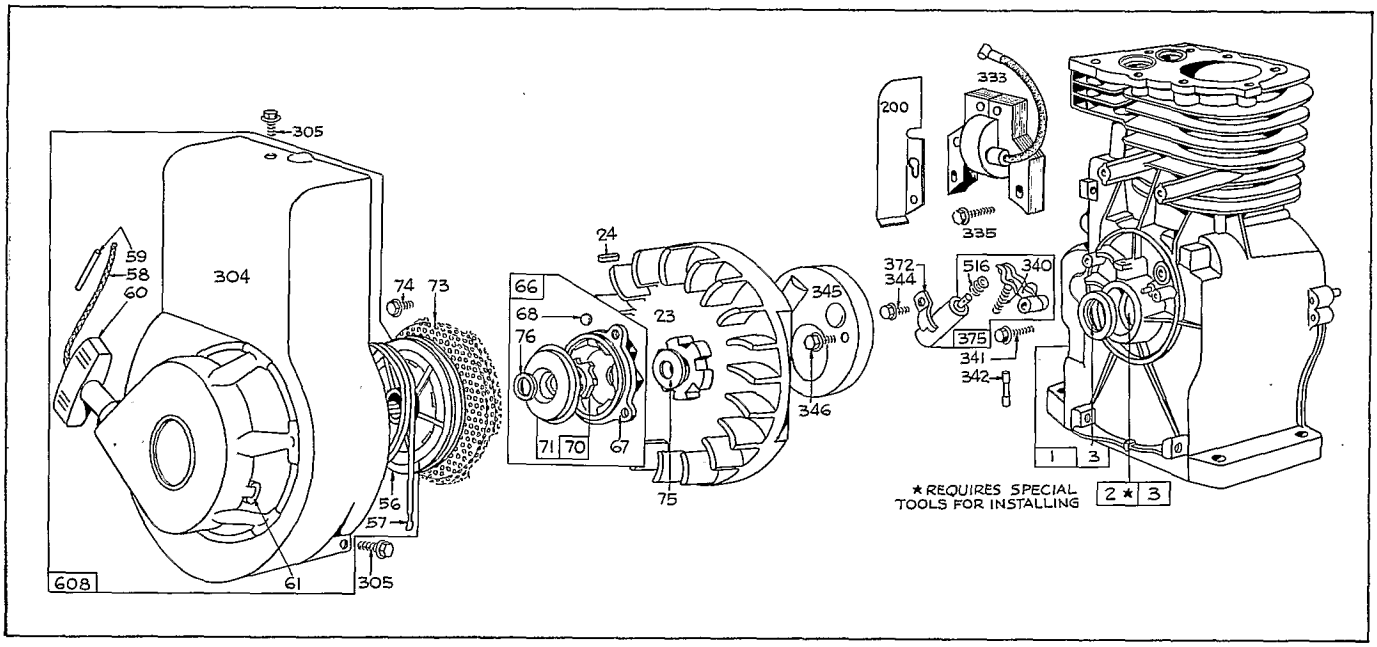

Ref. No.	Part No.	Description	No. Used
1	297566	Cylinder Assembly	1
*2	297565	Bushing - Cylinder	1
3	89660	Seal - Oil	2
23	297229	Flywheel Assembly	1
24	61760	Key - Flywheel	1
56	298738	Pulley - Rewind Starter	1
57	294303	Spring - Rewind Starter	1
58	66694	Rope - Rewind	1
59	230228	Pin - Starter Grip	1
60	66728	Grip - Starter Rope	1
61	68618	Bumper - Starter Pulley	1
66	298310	Clutch Assembly - Rewind Starter	1
67	211383	Housing - Starter Clutch	1
68	63770	Ball - Clutch	1
70	298436	Ratchet - Rewind Starter	1
71	221653	Washer - Clutch Ret.	1
73	221661	Screen - Starter Pulley	1
74	93042	Screw - Rotating Screen Mounting Sem	1
75	220865	Washer - Spring	1
76	68238	Washer - Ratchet Sealing	1
200	221480	Guide - Air	1
304	297596	Housing - Blower	1

Ref. No.	Part No.	Description	No. Used
305	93158	Screw - Blower Housing Mounting	2
333	298316	Armature - Magneto	1
335	93414	Screw - Armature Mtg.	1
340	26018	Spring - Breaker Arm	1
341	93381	Screw - Breaker Arm Mounting Sem	1
342	65704	Plunger - Breaker Point	1
344	93042	Screw - Condenser Clamp Mounting Sem	1
345	220366	Cover - Breaking Point and Condenser	1
346	93014	Screw - Dust Cover Mounting Sem	1
372	220477	Clamp - Condenser	1
375	294628	Breaker Points and Condenser Set Note: 299061 Ignition Kit Includes : 294628 Point Set 65704 Plunger 61760 Key - Flywheel	1
516	260374	Spring - Connector	1
608	297259	Starter Assy., - Rewind	1

* Requires special tools for installing.

CARBURETOR ASSEMBLY AND PARTS LIST

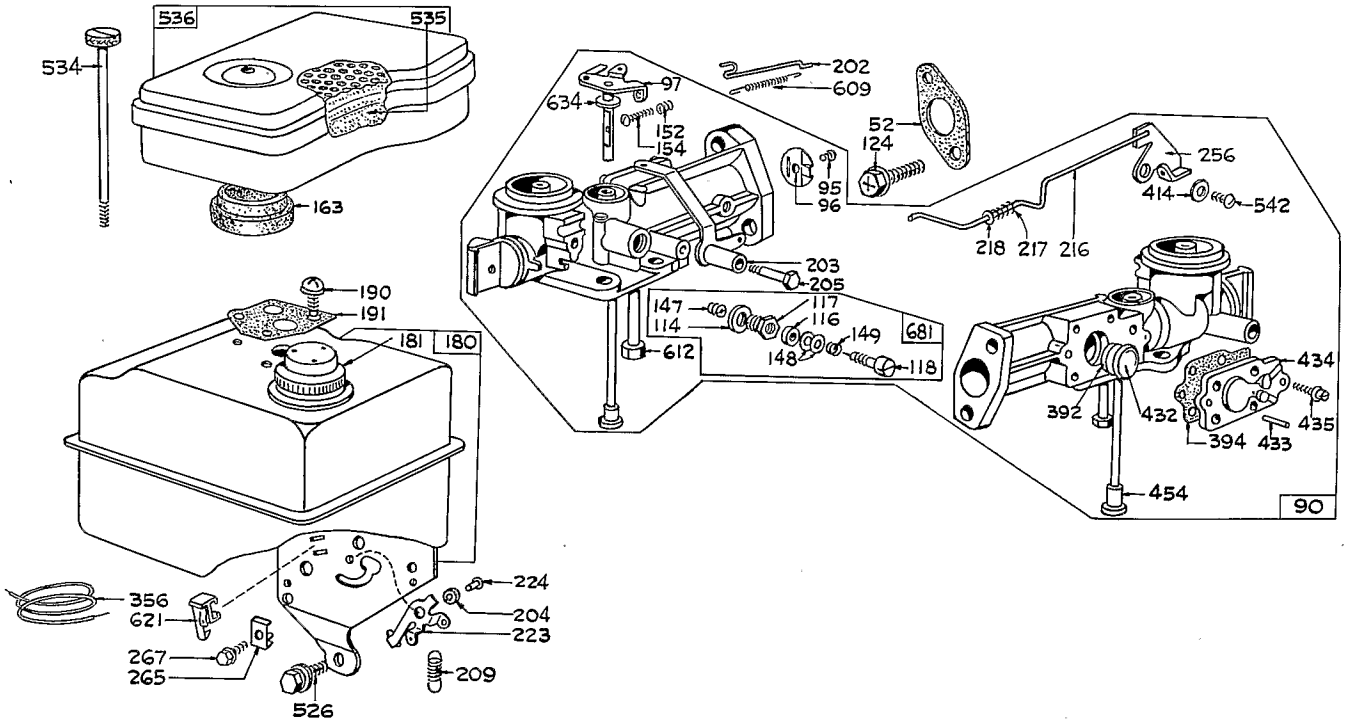

Ref. No.	Part No.	Description	No. Used
52	**27355	Gasket - Carburetor Mounting	2
90	298547	Carburetor Assy., (Complete)	1
95	93385	Screw - Throttle Valve to Shaft Sem	1
96	211203	Throttle - Carburetor	1
97	297468	Shaft and Lever - Throttle	1
114	66594	Gasket - Needle Valve Nut	1
116	65978	Packing - Needle Valve	1
117	230590	Nut - Needle Valve	1
118	23433	Valve - Needle	1
124	93357	Screw - Sem, Phillips Hex. Hd.	1
147	230591	Seat - Needle Valve	1
148	22235	Washer - Needle Valve	1
149	26336	Spring - Needle Valve	1
152	260575	Spring - Throttle Adjustment	1
154	92634	Screw - Round Head	1
163	**27660	Gasket - Air Cleaner Mounting	1
180	297600	Tank Assembly - Fuel (Complete)	1
181	298425	Cap - Fuel Tank	1
190	94341	Screw - Fuel Tank Mounting Sem	1
191	**27911	Gasket - Fuel Tank Mtg.	2
202	260678	Link - Throttle	1
203	297718	Crank - Bell	1
204	230844	Bushing - Governor Lever	1
205	93566	Screw - Shoulder	1
209	260695	Spring - Governor	1
216	299859	Link - Choke	1

Ref. No.	Part No.	Description	No. Used
217	260189	Spring - Choke Link	1
218	221198	Washer - Choke Link	1
223	221517	Lever - Gov. Control	1
224	93491	Rivet	1
256	299859	Crank - Bell	1
265	221535	Clamp - Casing	1
267	93496	Screw - Sem	1
356	297536	Wire - Ground	1
392	260455	Spring - Fuel Pump Diaphragm	1
394	270026	Diaphragm	1
414	220982	Washer	1
432	221377	Cap - Spring	1
433	93265	Pin - Diaphragm Cover	1
434	210959	Cover - Diaphragm	1
435	93141	Screw - Diaphragm Cover	1
454	296178	Housing - Fuel Pipe Screen (for 3/16" O.D. Pipe)	1
526	93343	Screw - Tank Bracket Mounting Sem	1
534	93322	Screw - Air Cleaner	1
535	27987	Element - Air Cleaner	1
536	297036	Cleaner Assembly - Air (Complete)	1
542	92265	Screw	1
609	260694	Spring - Throttle Link	1
612	296811	Pipe - Fuel	1
621	297472	Switch - Stop	1
634	270167	Washer, Throttle Shaft (Felt)	1
681	299060	Needle Valve Kit	1

**Included in Gasket Set - Part No. 297615

SPECIFICATIONS

FUEL TANK CAPACITY: 3 quarts

CLUTCH: Two tight-slack V-belts using idler pulleys.

BOLO TINE: 14" diameter #6 gage, (16) hardened, high carbon steel blades bolted to steel hub flanges.

BOLO TINE DRIVE:

Forward: High Speed; "4L" section V-belt on 2.50 P.D. engine pulley to 5.20 P.D. transmission pulley. (2.1:1 reduction)

Forward: Low Speed; "4L" section V-belt on 2.25 P.D. engine pulley to 5.50 P.D. transmission pulley. (2.44:1 reduction)

Reverse: "3L" section V-belt on 1.30 P.D. pulley on auxiliary PTO to 5.0 P.D. transmission pulley. (3.85:1 reduction)

TRANSMISSION: Grey iron casting with single thread, hardened and ground steel worm and 21 tooth bronze alloy worm wheel, running in oil. (21.1:1 reduction) Total reduction 50:1 in low speed.

TRANSMISSION LUBE CAPACITY: 4.5 oz. SAE 90.

CONTROLS: Throttle: Control wire and casing; operating lever on handle bar cover. Positions for stop and run.
Clutch: Single, over-center lever for forward, neutral and reverse. Lever must be held in reverse position for engagement.

WHEELS: 7" diameter stamped steel rims. Spot welded construction, powdered iron bearings.

TIRES: 10 x 1.75 semi-pneumatic

FRAME: Cast iron chassis assembly bolted to two drawbars which are pinned to wheel bracket and yoke assembly.

HANDLE: 1" diameter tubular steel handle bar welded to 16 gauge rectangular steel tubing support.

DEPTH GAUGE BAR: 3/8"x1-1/2"flat,. steel bar; adjustable – 0 to 8".

DEPTH OF SWATH: 7"; 9" with multiple passes.

WIDTH OF SWATH: Adjustable by changing tine positions; 14" to 26"

DIMENSIONS:

Overall Width:	26"
Overall Length:	52"
Height:	35"

WEIGHT: 130 lbs.

MAINTENANCE

SERVICE AIR CLEANER REGULARLY

Clean and re-oil air cleaner element every 25 hours under normal conditions. The capacity of the "Oil-Foam" air cleaner is adequate for a full season's use without cleaning in average homeowner lawn mower service. (Clean every few hours under extremely dusty conditions.)

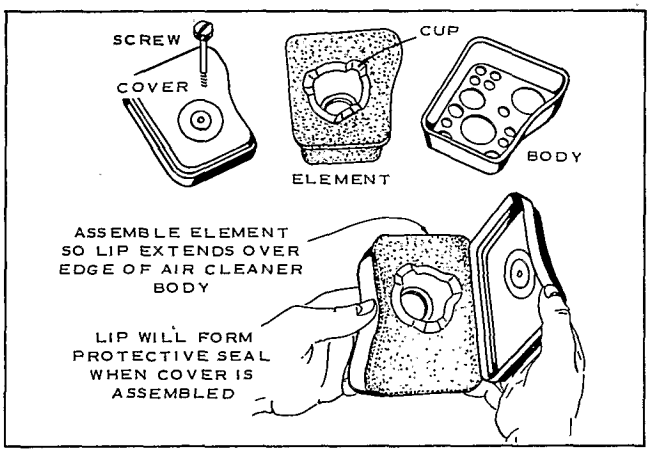

1. Remove screw.
2. Remove air cleaner carefully to prevent dirt from entering carburetor.
3. Take air cleaner apart.
4. A - Wash foam element in kerosene or liquid detergent and water to remove dirt.
   B - Wrap foam in cloth and squeeze dry.
   C - Saturate foam in engine oil. Squeeze to remove excess oil.
   D - Assemble parts-fasten to carburetor with screw.

CARBURETOR ADJUSTMENTS

Carburetors are adjusted at the factory and normally do not need adjustment unless they have been disasembled.

Initial Adjustment:

Close needle valve (turn clockwise), then open 1½ turns (turn counter-clockwise). This initial adjustment will permit the engine to be started and warmed up before making final adjustment.

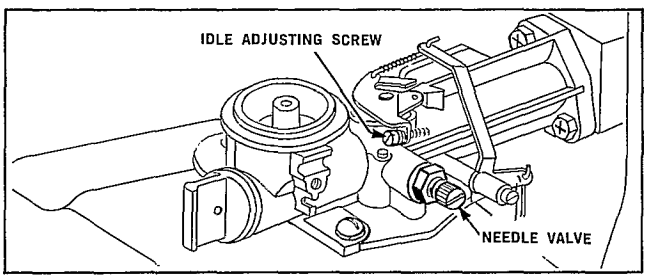

FINAL ADJUSTMENT

With engine running at normal operating speed (approximately 3000 RPM without load) close the needle valve (turn clockwise) until engine starts to lose speed (lean mixture). Then slowly open needle valve (turn counter-clockwise), past the point of smoothest operation, until engine just begins to run unevenly. This mixture should be rich enough for best performance under load.

Hold throttle in idling position. Turn idle speed adjusting screw until fast idle is obtained (1750 RPM).

Test the engine under full load. If engine tends to stall or die out, it usually indicates that the mixture is slightly lean and it may be necessary to open the needle valve slightly to provide a richer mixture. This richer mixture may cause a slight unevenness in idling.

CHOKE-A-MATIC CARBURETOR CONTROL ADJUSTMENTS

Choke-A-Matic Carburetor

Proper choke and stop switch operation is dependent upon proper adjustment of remote controls on the powered equipment.

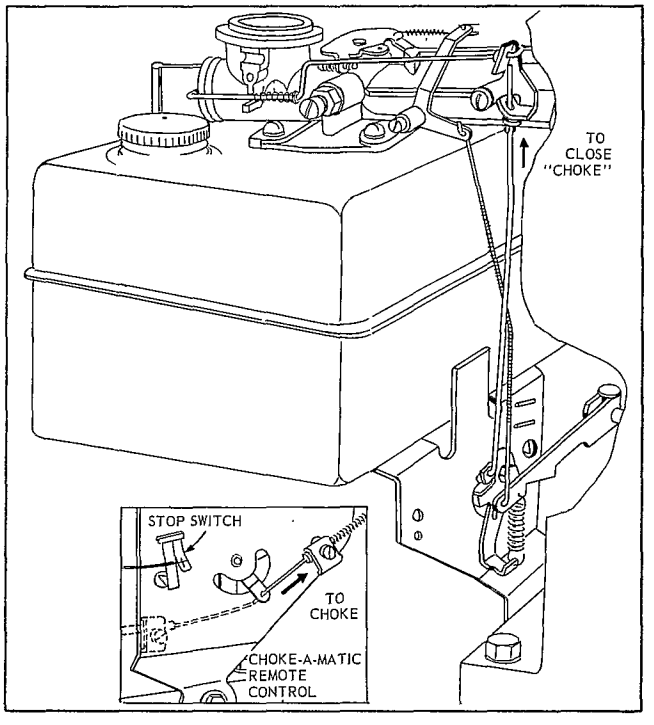

To Check Operation:

Remove air cleaner. Move remote control lever to CHOKE POSITION. The choke knob should then be fully extended. Move remote control lever to STOP. Governor control lever on fuel tank bracket should make good contact with stop switch to short out ignition.

To Adjust:

Place remote control lever on equipment in FAST position. Speed control lever "A" should be just touching the choke operating link at "B". If it does not, loosen casing clamp and move casing in or out to obtain this condition.

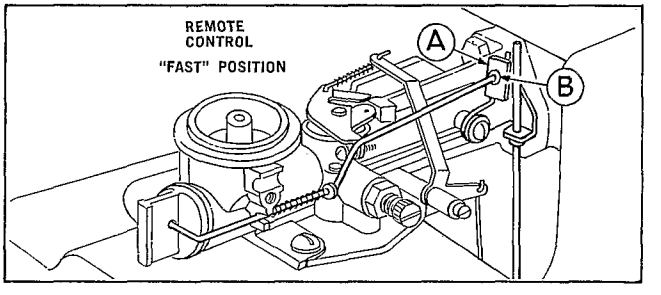

Recheck operation of controls after adjustment. Replace air cleaner.

Standard Speed Control:

Speed adjusting thumb nut is located on top of engine. To increase speed turn thumb nut clockwise.

STORAGE INSTRUCTIONS

Engines to be stored over 30 days should be completely drained of fuel to prevent gum deposits forming on essential carburetor parts, fuel filter, fuel lines and tank.

a. All fuel should be removed from fuel tank. Run the engine until it stops from lack of fuel. The small amount of fuel that remains in the sump of the tank should then be removed by absorbing it with a clean dry cloth.

b. While engine is still warm, drain oil from crankcase. Refill with fresh oil.

c. Remove spark plug, pour 1 ounce of SAE-30 oil into cylinder and crank slowly to distribute oil. Replace spark plug.

d. Clean dirt and chaff from cylinder, cylinder head fins and blower housing.

CAUTION: Drain fuel into container outdoor's away from fire or flame.

PRODUCT CHANGES

In an effort to make improvements available to Toro owners as quickly as possible, minor changes are incorporated into Toro's products from time to time that do not become immediately shown in the Parts Catalog. If such a change apparently has been made in your unit, which is not reflected in your manual, see your Toro distributor or his authorized Toro service dealer for information and part numbers.

IMPORTANT ORDERING INSTRUCTIONS

Repair parts are available from your TORO dealer. To insure getting correct parts without delay, please furnish the following information:

1. Serial number of your product as shown on the name plate.
2. Part number, description and quantity of each part required.
3. Name and address where parts are to be shipped.
4. Do NOT order by reference number, use part number only.

THE TORO PROMISE

It is Toro's policy to design and produce Toro products to provide our customers with a high level of performance and durability in normal operation. Our products, however, are produced in high volume, and it is inevitable that occasionally a unit will reach a customer with a defect in materials or workmanship which causes that unit to fall below the normal high level of Toro performance. Invariably, such a defect will be noticed in a residential product within one year, and in an institutional product within ninety days after purchase. Recognizing this possibility, Toro has established a simple guarantee policy and procedure that is intended to assure customer satisfaction. This guarantee statement is as follows:

The Toro Promise

Toro Manufacturing Corporation promises to repair any TORO product for the original purchaser if defective in materials or workmanship. The following time periods from the date of purchase apply:

Residential products	1 year
Residential products used commercially	45 days
Institutional products	90 days

The costs of parts and labor are included, but the customer pays the transportation costs. Just return any residential product to a TORO Service Dealer, or any institutional product to a TORO distributor.

Should you feel that a product is defective, and wish to rely on The Toro Promise, the following procedure is recommended:

1. Contact any TORO dealer or distributor, but preferably the dealer or distributor from whom you purchased the product.
2. He will instruct you to either return the product to him, or tell you the name and address of your nearest TORO Service Dealer if the product is to be returned to such dealer.
3. Take the product and your original sales slip, or other evidence of purchase date, to the servicing dealer.
4. The servicing dealer will inspect the unit, advise you whether the product is defective and, if so, make all repairs necessary to correct the defect without extra charge to you.

If for any reason you are dissatisfied with the dealer's analysis of the defect or the service he performs, we urge you to contact us. Write:

TORO "Customer Care" Department
8111 Lyndale Avenue South
Minneapolis, Minnesota 55420

TORO®

We Take Care™

MAINTENANCE RECORD
