1969 - 1970 - 1971

TORO®

We Take Care™

MODEL NO. 58200 — 900001 & UP;
000001 & UP;
100001 & UP

PARTS CATALOG

5 H.P. TILLER

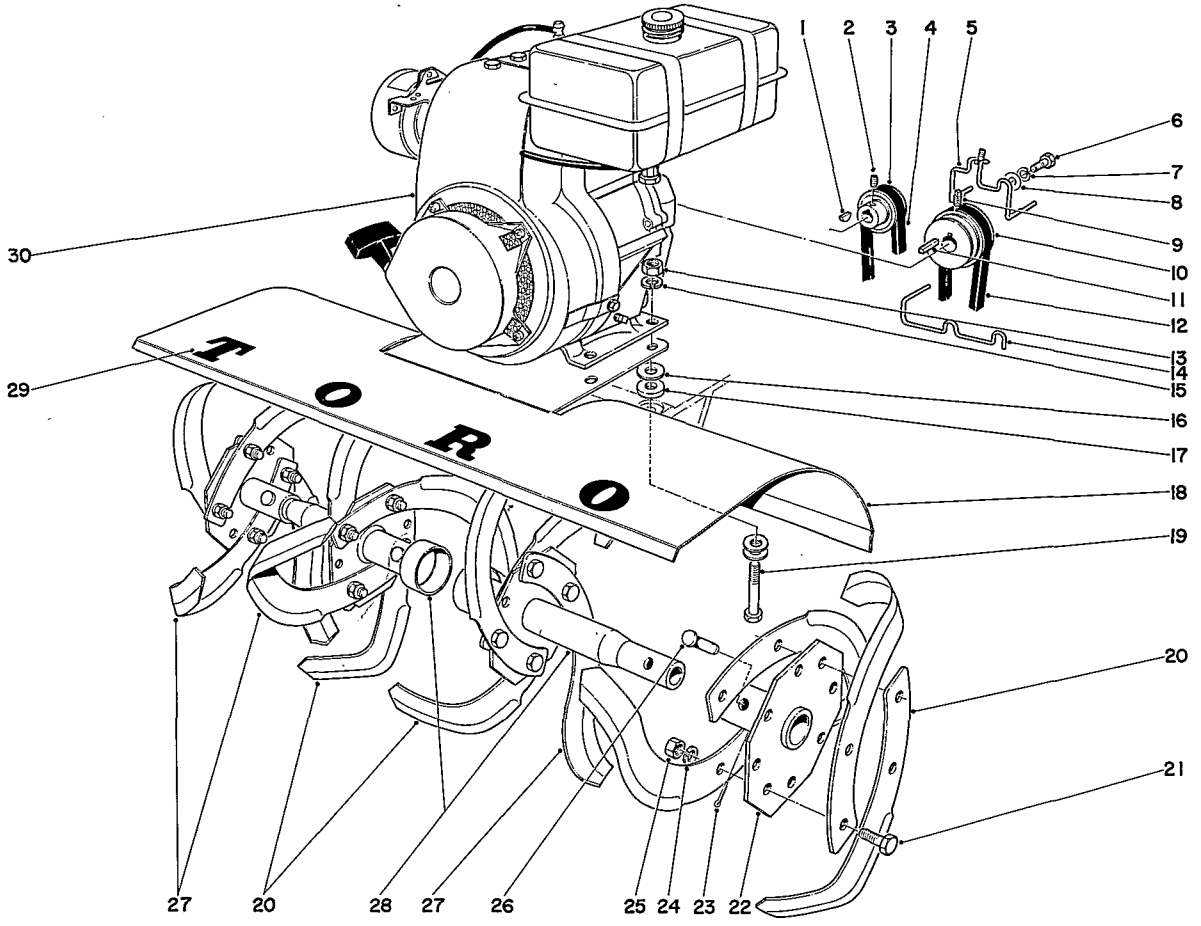

TINE AND ENGINE ASSEMBLY

Ref. No.	Part No.	Description	No. Used
1	3257-24	Key	1
2	3245-7	Set Screw	1
3	7-0071	Reverse Pulley	1
4	7-2166	Belt	1
5	7-0335	Belt Guide	1
6	3210-4	Capscrew	4
7	3253-4	Lockwasher	4
8	3256-3	Washer	4
9	3246-2	Set Screw	1
10	7-0070	Engine Pulley	1
11	7-0036	Key	1
12	7-0073	Belt	1
13	3217-6	Nut	4
14	7-0336	Belt Guide	1
15	3253-4	Lockwasher	4

Ref. No.	Part No.	Description	No. Used
16	3256-3	Washer	12
17	7-0081	Washer Special	4
18	7-0072	Plant Shield	1
19	322-11	Capscrew	4
20	7-0103	Tine R. H.	8
21	323-6	Capscrew	16
22	7-0105	Axle Hub	2
23	3272-7	Cotter Pin	4
24	3253-21	Lockwasher	16
25	3217-7	Nut	16
26	7-2116	Pin Tine Drive	4
27	7-0102	Tine L. H.	8
28	7-0104	Axle Hub	2
29	7-8940	Decal	1
30	221-275	Engine	1

Copyright 1970 By
Toro Manufacturing Corporation
Minneapolis, Minnesota 55420 U.S.A.

Price $1.00

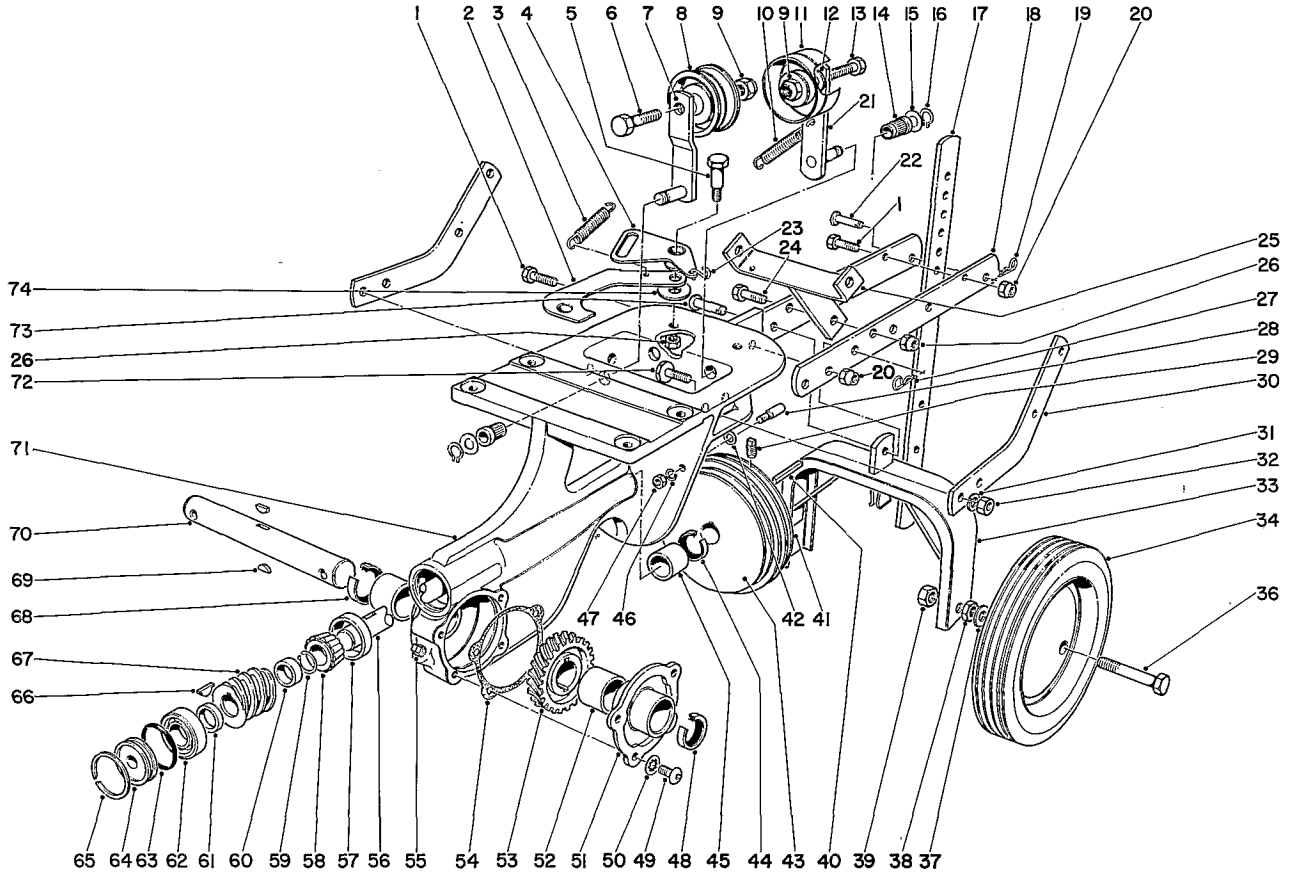

CHASSIS ASSEMBLY

Ref. No.	Part No.	Description	No. Used
1	323-8	Capscrew	3
2	7-0028	Reverse Link	1
3	7-1322	Spring Reverse Return	1
4	7-0027	Bell Crank	1
5	7-0030	Shoulder Bolt	1
6	323-8	Capscrew	1
7	7-0055	Idler Arm	1
8	7-0056	Idler Pulley	1
9	32152-2	Nut	2
10	7-0025	Spring	1
11	7-0051	Pulley	1
12	7-0052	Washer	2
13	323-9	Capscrew	1
14	7-0023	Bearing	2
15	7-0024	Washer	2
16	32120-35	Snap Ring	2
17	7-0076	Depth Gauge	1
18	7-0037	Draw Bar	2

Ref. No.	Part No.	Description	No. Used
19	3290-255	Hair Pin	1
20	32152-2	Nut	3
21	7-0050	Idler Arm	1
22	7-0040	Clevis Pin	1
23	7-3618	S - Hook	1
24	322-7	Capscrew	2
25	7-0041	Support Handle Bar	1
26	32152-1	Nut	3
27	3290-255	Hair Pin	1
28	7-0031	Belt Guide	2
29	3246-2	Set Screw	2
30	7-0033	Handle Bracket	2
31	3253-21	Lockwasher	4
32	3217-7	Nut	4
33	7-0038	Wheel Bracket	1
34	7-0075	Wheel Assy.	2
36	7-3552	Axle	2
37	3256-6	Washer	2

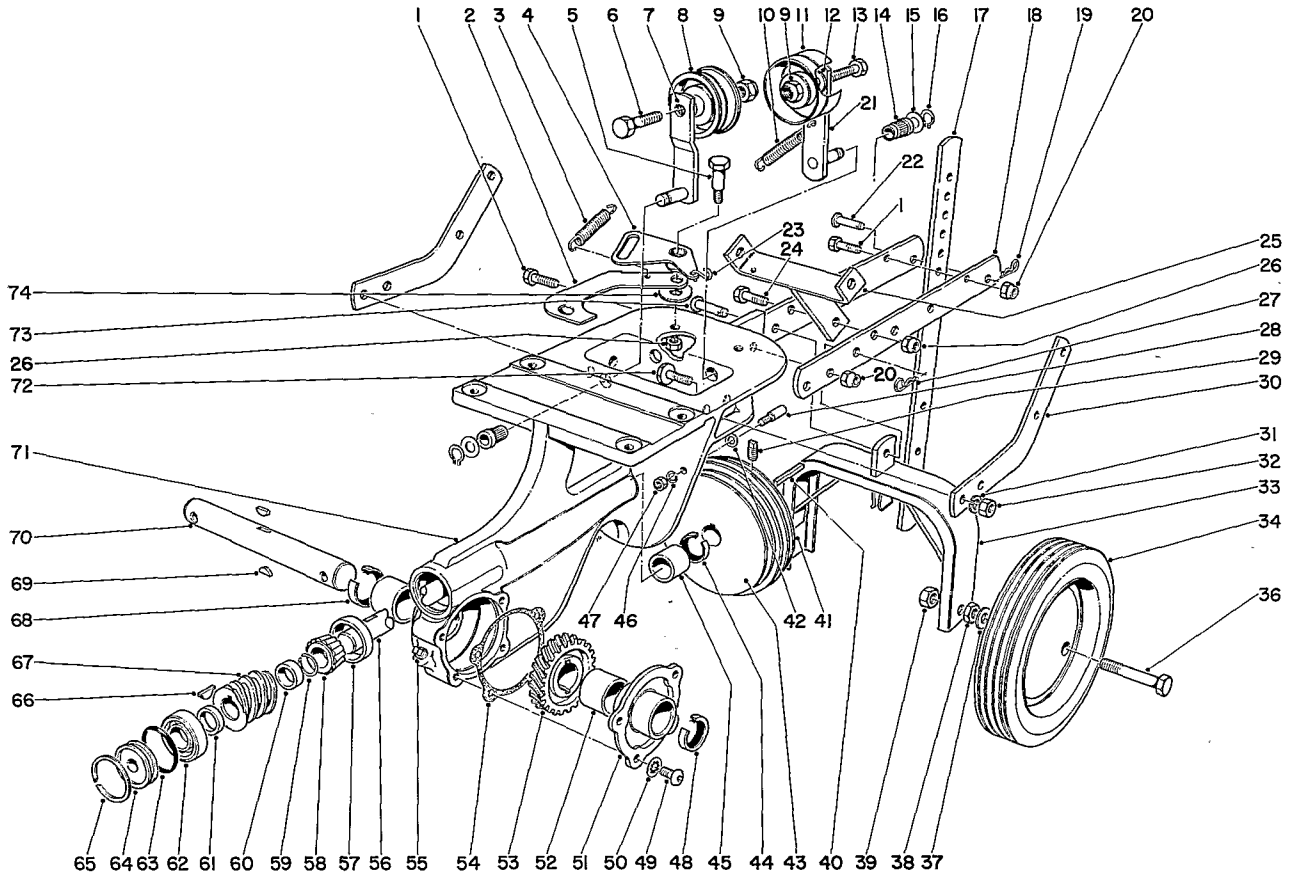

CHASSIS ASSEMBLY

Ref. No.	Part No.	Description	No. Used
38	3218-5	Nut	2
39	32152-3	Nut	2
40	7-0036	Key	1
41	7-0035	Pulley - Worm Shaft	1
42	3256-16	Washer	2
43	7-0034	Pulley - Reverse Worm Shaft	1
44	7-0044	Oil Seal	1
45	256-167	Bearing	1
46	3255-7	Lockwasher	2
47	3218-1	Nut	2
48	7-0045	Oil Seal	1
49	3274-31	Screw Button Hd.	4
50	3254-8	Washer	4
51	7-0048	Cover	1
52	252-52	Bearing	2
53	7-0047	Worm Gear	1
54	7-0020	Gasket	1
55	281-1	Pipe Plug	1
56	7-0012	Worm Shaft	1

Ref. No.	Part No.	Description	No. Used
57	254-89	Bearing Cup	1
58	254-88	Bearing Cone	1
59	7-0013	Snap Ring	1
60	7-0014	Spacer - Rear	1
61	7-0015	Spacer - Front	1
62	251-207	Bearing	1
63	237-71	O-Ring	1
64	7-0017	Plug	1
65	7-0018	Snap Ring	1
66	3257-23	Woodruff Key	1
67	7-0016	Worm Gear	1
68	7-0045	Oil Seal	1
69	3257-33	Woodruff Key	2
70	7-0046	Shaft	1
71	7-0043	Chassis	1
72	32141-102	Leveler Hd.	4
73	7-0040	Clevis Pin	1
74	7-0032	Washer	1

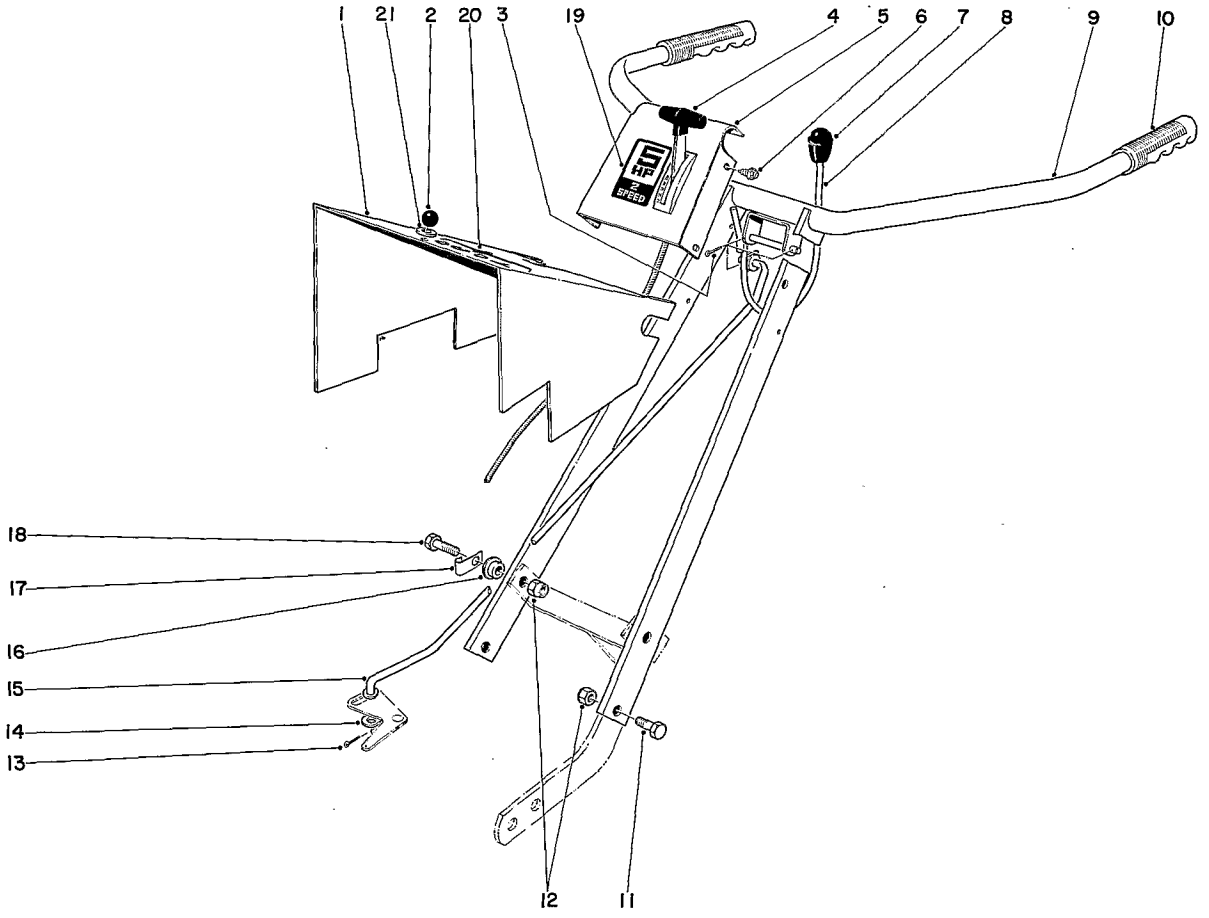

HANDLE ASSEMBLY

Ref. No.	Part No.	Description	No. Used
1	7-0080	Pulley Cover	1
2	233-17	Knob	1
3	3272-7	Cotter Pin	2
4	7-3363	Throttle	1
5	7-3365	Cover Handle	1
6	32104-77	Self-Tapping Screw	4
7	233-18	Knob	1
8	7-0088	Shift Lever	1
9	7-0087	Handle Bar	1
10	235-17	Handle Grip	2
11	322-5	Capscrew	2

Ref. No.	Part No.	Description	No. Used
12	32152-1	Nut	4
13	3272-7	Cotter Pin	2
14	7-0052	Flat Washer	1
15	7-0078	Clutch Rod	1
16	7-2041	Spacer	2
17	7-0077	Cable Clip	1
18	322-7	Capscrew	2
19	7-4342	Decal	1
20	5-1508	Decal	1
21	3256-2	Washer	1

MAGNETO MODEL NO. 610689A

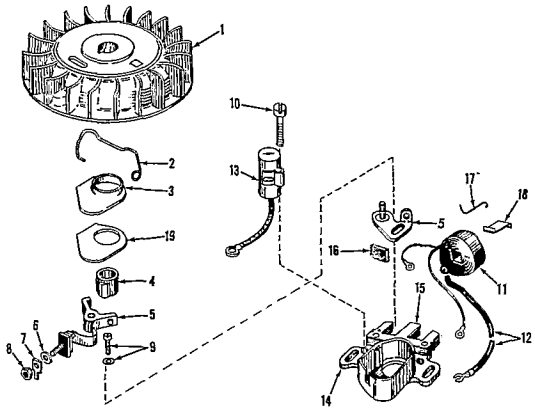

Ref. No.	Part No.	Description	No. Used
1	30555	Flywheel	1
2	30551	Spring, Breaker Box	1
3	30550	Cover, Breaker Box Dust	1
4	30992	Cam Breaker (Not used on all engines)	1
5	30547A	Contact Assy., Breaker	1
6	610385	Washer, Terminal	1
7	30843	Tab, Ground Terminal	1
8	610408	Nut, Terminal	1
9	29181	Screw, Condenser Fastening	1
10	610593	Screw, Condenser Fastening	1

Ref. No.	Part No.	Description	No. Used
11	30560	Coil Assy., (Incl. Ref. Nos. 12, 13 & 18)	1
12	30554	Wire, Lead	1
13	30548A	Condenser	1
14	30545	Core & Plate	1
15	30561A	Stator Assy., (Incl. Nos. 2, 3, 5 thru 14 & 16 thru 19)	1
16	30549	Felt, Cam Wiper	1
17	31311	Clip, Coil Locking	1
18	29629	Spring, Coil Wedge	1
19	30883	Gasket, Dust Cover	1

CARBURETOR MODEL NO. 630994A

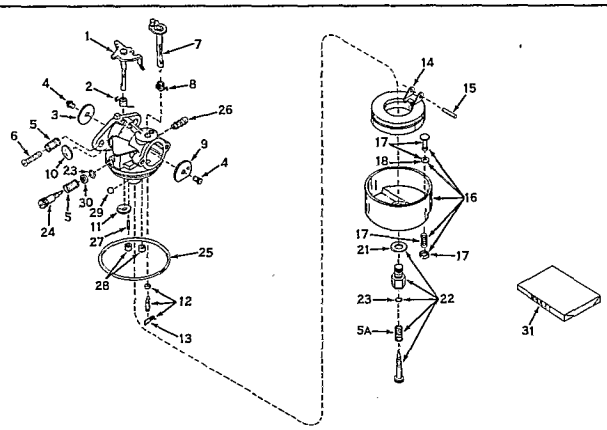

Ref. No.	Part No.	Description	No. Used
1	31834	Shaft & Lever Assembly, Throttle	1
2	630731	Spring, Throttle return	1
3	631036	Shutter, Throttle	1
4	650506	Screw, Rd. Hd.	2
5	630766	Spring, Idle regulating screw	2
5A	630738	Spring, Main Adjusting screw	1
6	650417	Screw, Idle regulating	1
7	31842	Shaft & Lever Assembly, Choke	1
8	630757	Spring, Choke return	1
9	31837	Shutter, Choke	1
10	630748	Plug, Welch	1
11	631027	Plug, Welch	1
12	*631021	Inlet Needle, Seat & Clip Assembly (Incl. No. 13)	1
13	631022	Clip, Inlet needle	1
14	631023	Float, Carburetor	1
15	*631024	Shaft, Float	1

Ref. No.	Part No.	Description	No. Used
16	631025	Bowl & Drain Assy., Float (Incl. No. 17)	1
17	27136	Drain Assembly, Bowl (Incl. No. 18)	1
18	27554	Gasket, Drain plunger	1
21	*27110	Gasket, Bowl-to-body	1
22	*31839	Adjustment Screw Assy., Main (Incl. Nos. 5A, 21 & 23)	1
23	*630740	"O" Ring, Adjustment screw	2
24	*631078	Screw, Idle adjustment	1
25	*631028	Gasket, Bowl-to-body	1
26	31838	Fitting, Fuel inlet	1
27	631039	Pin	1
28	630747	Plug, Cup	2
29	631081	Ball, Aluminum	1
30	630739	Washer, Flat	1
31	31840	Repair Kit (Incl. items marked*)	1

ENGINE ASSEMBLY

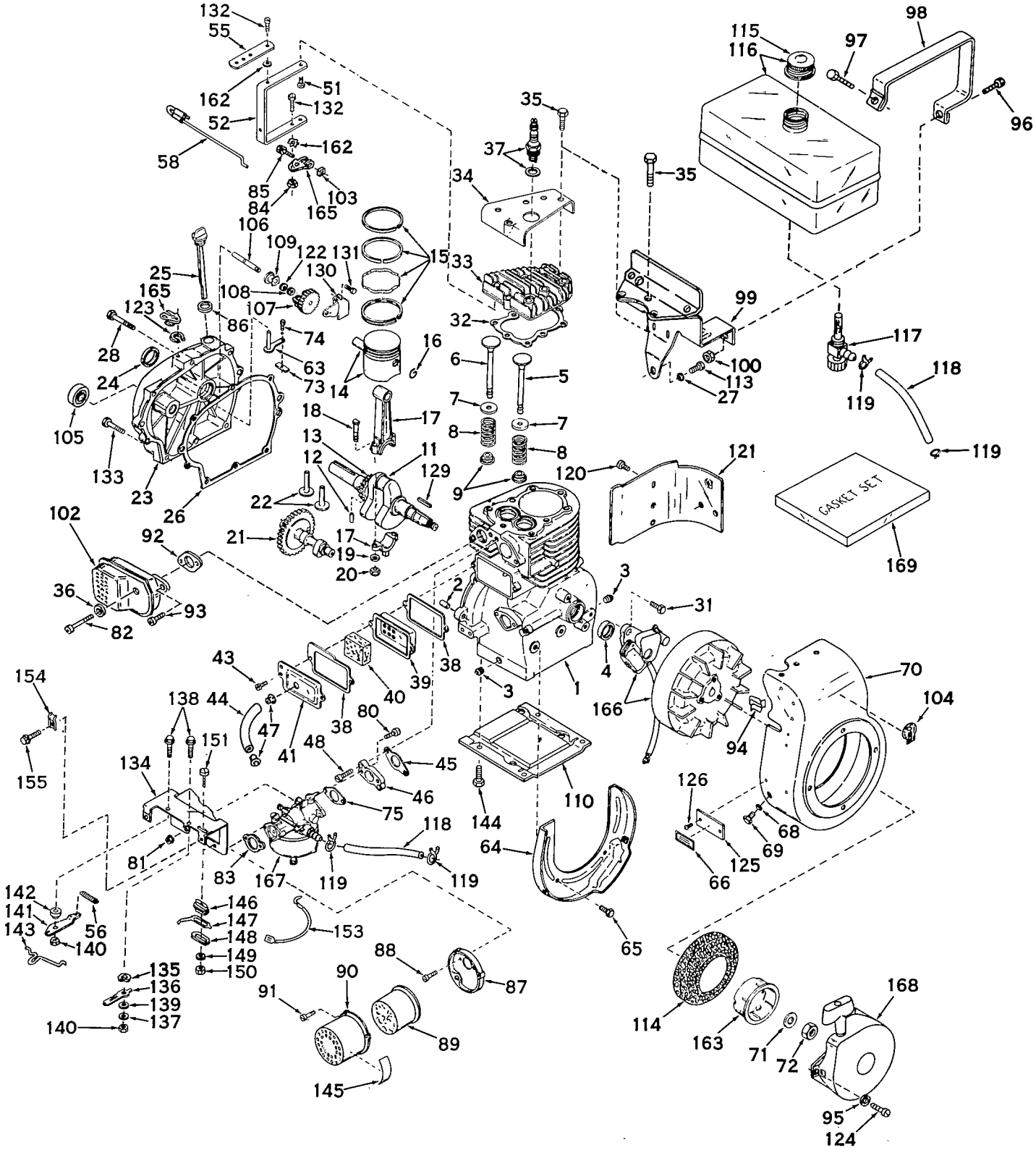

ENGINE MODEL NO. H50-65067H PARTS LIST

Ref. No.	Part No.	Description	No. Used
1	31659	Cylinder Assy. (Incl. Nos. 2, 3 & 4)	1
2	27652	Pin, Dowel	2
3	27642	Plug, Sq. hd. pipe (oil drain)	2
4	*27876B	Seal, Oil	1
5	27877A	Valve, Intake (Standard)	1
5	27879A	Valve, Intake (1/32" oversize) (Incl. No. 9)	1
6	27878A	Valve, Exhaust (Standard)	
6	27880A	Valve, Exhaust (1/32" oversize) (Incl. No. 9)	1
7	27882	Cap, Upper valve spring	2
8	27881	Spring, Valve	2
9	32581	Cap, Lower valve spring (Standard)	2
11	30543	Crankshaft Assy. (Incl. Nos. 12 & 13)	1
12	29783	Pin, Crankshaft gear	1
13	27884	Gear, Crankshaft	1
14	30662	Piston & Pin Assy. (Standard) (Incl. 2 of No. 16)	1
14	30663	Piston & Pin Assy. (.010 oversize) (Incl. 2 of No. 16)	1
14	30664	Piston & Pin Assy. (.020 oversize) (Incl. 2 of No. 16)	1
15	28935	Ring Set, Piston (Standard)	1
15	28936	Ring Set, Piston (.010 oversize)	1
15	28937	Ring Set, Piston (.020 oversize)	1
16	27888	Ring, Piston pin retaining	2
17	31295A	Rod Assy., Connecting (Incl. Nos. 18, 19 & 20)	1
18	21718	Bolt, Connecting rod	2
19	26073	Washer, Connecting rod	2
20	28264	Nut, Lock	2
21	32272	Camshaft	1
22	27893	Lifter, Valve	2
23	31720	Cover, Cylinder (Incl. Nos. 24, 105 & 106)	1
24	*28427	Seal, Oil	1
25	31297	Dipstick, Oil (Incl. No. 86)	1
26	*30684	Gasket, Cylinder cover	1
27	8303	Lockwasher	1
28	650488	Screw, Hex hd. Sems.	7
31	650489	Screw, Hex hd. Sems with flat washer	2
32	*28938B	Gasket, Cylinder head	1
33	30938A	Head, Cylinder	1
34	30939	Cover, Cylinder head	1
35	28261	Screw, Hex hd. cap	8
36	26073	Washer, Flat	1
37	21943	Plug, Spark (Champion J-8 or equivalent)	1
38	*27896	Gasket, Valve spring cover	2
39	28423	Body Assy., Breather	1
40	28424	Element, Breather	1
41	28425	Cover, Valve Spring	1
43	650128	Screw, Fil. hd. Sems	2
44	32447	Tube, Breather	1
45	*27915	Gasket, Intake	1
46	30195A	Flange, Carburetor	1
47	32446	Grommet, Breather tube	2
48	30196	Screw, Phil. Fil. hd. mach.	2
51	30319	Rivet, Split	1
52	31709	Lever, Governor	1
55	30205	Bracket, Governor adjusting	1

Ref. No.	Part No.	Description	No. Used
56	30826	Spring, Extension	1
58	30824	Link, Governor-to-throttle	1
63	30699A	Rod Assy., Governor	1
64	29536	Baffle, Blower housing	1
65	650561	Screw, Hex hd. Sems	2
66	30586	Decal, Instruction	1
68	8274	Lockwasher	2
69	29747	Screw, Hex hd. cap	2
70	31293	Housing, Blower	1
71	650490	Washer, Belleville	1
72	8116	Nut, Crankshaft	1
73	30700	Yoke, Governor	1
74	650494	Screw, Phil. fil. hd. Sems	1
75	*31688	Gasket, Carburetor	1
80	650572	Screw, Phil. flat hd. Sems	2
81	29752	Nut, Hex	2
82	6023	Screw, Hex, hd. cap	1
83	*27272	Gasket, Air cleaner	1
84	30322	Nut & Lockwasher	1
85	29826	Screw, Hex washer hd.	1
86	*29673	Gasket, Dipstick	1
87	31708	Bracket, Air cleaner	1
88	28820	Screw, Phil. fil. hd. sems	2
89	31700	Element, Air cleaner	1
90	31692	Body Assy., Air cleaner	1
91	650152	Screw, Fil. hd. Sems	3
92	*27930	Gasket, Exhaust	1
93	30196	Screw, Fil. hd. mach.	1
94	27275	Clip, Hi-tension	2
95	650168	Washer, Flat	4
96	6202	Screw, Hex hd. cap	2
97	29212	Screw, Hex hd. Sems	2
98	31697	Strap, Fuel tank	2
99	31694	Bracket, Fuel tank	1
100	29752	Nut, Lock	2
102	32401	Muffler	1
103	29216	Nut, Square	1
104	31325	Decal, Name & H.P.	1
105	28926	Seal, Oil	1
106	31845	Shaft, Mechanical governor	1
107	30591	Gear Assy., governor	1
108	29193	Ring, Retaining	1
109	30588A	Spool, Governor	1
110	29538	Base, Engine	1
113	29715	Screw, Hex hd. cap	1
114	590417	Screen, Starter cup	1
115	32387	Cap, Fuel filler	1
116	31301	Tank, Fuel (Incl. No. 115)	1
117	29683	Strainer & Shut-off Valve, Fuel	1
118	30705	Line, Fuel	1
119	26460	Clamp, Fuel Line	2
120	650128	Screw, Fil. hd. Sems	1
121	30622	Extension, Blower housing	1
122	30590A	Washer, Flat	1
123	29642	Ring, Retainer	1
124	30513	Screw, Phil. Fil. hd. Sems	4
125	31345	Plate, Identification	1
126	29309	Stud, Drive	2
129	30884	Key, Flywheel	1
130	31843A	Bracket, Governor	1
131	28763	Screw, Slotted hex hd., thr'd cutting	2
132	650548	Screw, Hex slotted washer hd.	2
133	650493	Screw, Hex hd. Sems	1
134	30821	Bracket, Speed control	1

ENGINE MODEL NO. H50-65067H PARTS LIST (CONTINUED)

Ref. No.	Part No.	Description	No. Used
135	28558	Washer, Wave	1
136	30314	Lever, Speed control	1
137	30369	Washer, Flat	1
138	**30312	Screw, Hex slotted washer hd. Sems	2
139	30773	Bushing, Control lever	1
140	**30529	Nut, Lock	2
141	30823	Lever, Bellcrank	1
142	29530	Bushing, Bellcrank lever	1
143	30825	Link, RPM	1
144	650542	Screw, Hex hd. cap	4
145	31871	Decal, Air cleaner	1
146	30092	Washer, Insulating	1
147	30093	Terminal	1
148	30094	Washer, Insulating	1
149	30771	Washer, Plain	1
150	30095	Nut, Lock	1
151	30091	Screw, Hex washer hd. Sems	1
153	28468	Wire Assy., Ground	1
154	27793	Clip, Conduit	1
155	28942	Screw, Hex hd. Sems	1
162	29918	Lockwasher, E.T.	1
163	32125	Cup, Starter	1
165	29916	Clamp, Governor	1
166	610689A	Magneto	1
167	630994A	Carburetor	1
168	590420	Starter, Rewind	1
169	31382	Gasket Set (Incl. items marked*)	1

** In original production rivets are used instead of the screws and nuts illustrated. Rivets can be removed and illustrated hardware used when replacing component parts.

REWIND STARTER MODEL NO. 590420

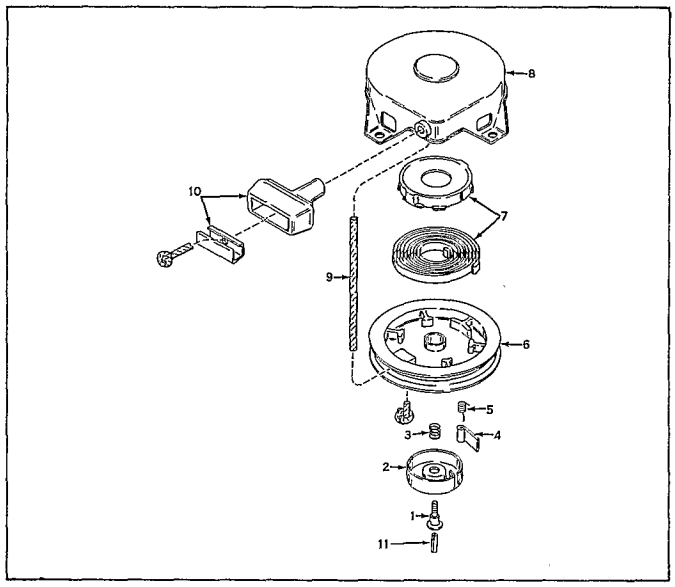

Ref. No.	Part No.	Description	No. Used
1	590409	Screw, Retainer	1
2	590410	Retainer, R. H.	1
3	590411	Spring, Brake	1
4	590148	Dog, Starter	1
5	590412	Spring, R. H. Dog	1
6	590413A	Pulley	1
7	590414	Spring & Keeper Assy.	1
8	590415	Housing Assy., Starter	1
9	590386	Rope, Starter	1
10	590387	Handle Assy., Starter	1
11	590459	Pin, Centering	1

SPECIFICATIONS

FUEL TANK CAPACITY: 1 gallon

CLUTCH: Two tight-slack V-belts using idler pulleys.

BOLO TINE: 14" diameter #6 gage, (16) hardened, high carbon steel blades bolted to steel hub flanges.

BOLO TINE DRIVE:

Forward: High Speed; "4L" section V-belt on 2.50 P.D. engine pulley to 5.20 P.D. transmission pulley. (2.1:1 reduction)

Forward: Low Speed; "4L" section V-belt on 2.25 P.D. engine pulley to 5.50 P.D. transmission pulley. (2.44:1 reduction)

Reverse: "3L" section V-belt on 1.30 P.D. pulley on auxiliary PTO to 5.0 P.D. transmission pulley. (3.85:1 reduction)

TRANSMISSION: Grey iron casting with single thread, hardened and ground steel worm and 21 tooth bronze alloy worm wheel, running in oil. (21.1:1 reduction) Total reduction 50:1 in low speed.

TRANSMISSION LUBE CAPACITY: 4.5 oz. SAE 90.

CONTROLS: Throttle: Control wire and casing; operating lever on handle bar cover. Positions for stop and run.

Clutch: Single, over-center lever for forward, neutral and reverse. Lever must be held in reverse position for engagement.

WHEELS: 7" diameter stamped steel rims. Spot welded construction, powdered iron bearings.

TIRES: 10 x 1.75 semi-pneumatic

FRAME: Cast iron chassis assembly bolted to two drawbars which are pinned to wheel bracket and yoke assembly.

HANDLE: 1" diameter tubular steel handle bar welded to 16 gage rectangular steel tubing support.

DEPTH GAGE BAR: 3/8" x 1-1/2" flat, steel bar; adjustable – 0 to 8".

DEPTH OF SWATH: 7"; 9" with multiple passes.

WIDTH OF SWATH: Adjustable by changing tine positions; 14" to 26".

DIMENSIONS:

Overall Width:	26"
Overall Length:	52"
Height'	35"

WEIGHT: 140 lbs.

CARBURETOR ADJUSTMENTS

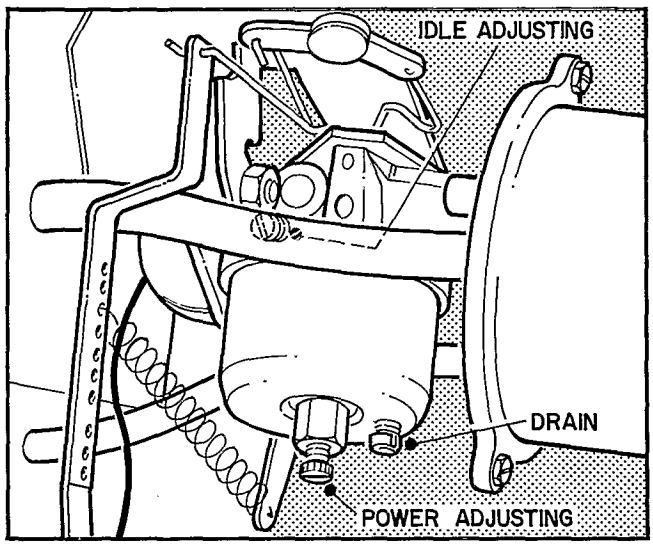

Figure 1.

Do not make unnecessary adjustments. Factory settings are correct for most applications. If adjustments are needed, proceed as follows:

1. Close power adjusting needle by turning to right (clockwise). Close finger tight only. Forcing will cause damage.

2. Open one turn (counterclockwise).

3. Close idle adjusting needle (see Fig. 1) by turning to right (clockwise). Close finger tight only. Forcing will cause damage.

4. Open five/eights (5/8) turn counterclockwise.

5. Start Engine. Follow starting instructions.

6. With throttle open (carburetor control at "choke" position), adjust power adjusting needle one-eighth (1/8) turn at a time forward or backward until engine runs smoothly. If engine tends to stall under load enrich mixture slightly (counterclockwise).

7. Hold throttle lever closed or move carburetor control to "IDLE" or "SLOW" position and adjust idle adjusting needle until engine runs smoothly proceeding as in Step 6 above.

8. Allow several seconds between each adjustment when performing either Step six (6) or seven (7) to allow engine to react to new setting.

9. Maximum engine speeds are preset at factory and should not be changed except by a qualified Toro repairman who has the necessary equipment.

10. **IMPORTANT**: Air cleaner should always be checked or cleaned prior to carburetor adjustments. In many cases a dirty air cleaner results in unnecessary carburetor adjustments. (See below for cleaning the air cleaner.)

SERVICING THE AIR CLEANER

Clean element every ten (10) hours or oftener if engine runs rich and emits black smoke from the exhaust. To clean:

1. Remove air cleaner cover.

2. Remove polyurethane element and wash in detergent and water solution by squeezing similar to a sponge. Squeeze out cleaning solution.

3. Re-oil element by applying a generous quantity of oil to open ends and sides.

4. Squeeze to distribute oil and to remove excess oil.

5. Reinstall element and air cleaner cover.

6. Dusty conditions may require more frequent cleaning.

STORAGE INSTRUCTIONS

In the event engine is to be stored for any length of time (30 days or more),

1. Drain gas tank completely by removing fuel line at the carburetor or fuel tank, whichever is easier.

CAUTION: Drain into container outdoors away from fire or flame.

2. Inside protection of engine for storage is performed by removing spark plug and pouring one ounce of SAE 30 oil through spark plug hole into cylinder. Crank engine without starting several times to spread oil over cylinder walls.

3. Replace spark plug.

THE TORO PROMISE

It is Toro's policy to design and produce Toro products to provide our customers with a high level of performance and durability in normal operation. Our products, however, are produced in high volume, and it is inevitable that occasionally a unit will reach a customer with a defect in materials or workmanship which causes that unit to fall below the normal high level of Toro performance. Invariably, such a defect will be noticed in a residential product within one year, and in an institutional product within ninety days after purchase. Recognizing this possibility, Toro has established a simple guarantee policy and procedure that is intended to assure customer satisfaction. This guarantee statement is as follows:

The Toro Promise

Toro Manufacturing Corporation promises to repair any TORO product for the original purchaser if defective in materials or workmanship. The following time periods from the date of purchase apply:

Residential products . . . . . 1 year
Residential products used commercially. . . 45 days
Institutional products . . . . . 90 days

The costs of parts and labor are included, but the customer pays the transportation costs. Just return any residential product to a TORO Service Dealer, or any institutional product to a TORO distributor.

Should you feel that a product is defective, and wish to rely on The Toro Promise, the following procedure is recommended:

1. Contact any TORO dealer or distributor, but preferably the dealer or distributor from whom you purchased the product.
2. He will instruct you to either return the product to him, or tell you the name and address of your nearest TORO Service Dealer if the product is to be returned to such dealer.
3. Take the product and your original sales slip, or other evidence of purchase date, to the servicing dealer.
4. The servicing dealer will inspect the unit, advise you whether the product is defective and, if so, make all repairs necessary to correct the defect without extra charge to you.

If for any reason you are dissatisfied with the dealer's analysis of the defect or the service he performs, we urge you to contact us. Write:

TORO "Customer Care" Department
8111 Lyndale Avenue South
Minneapolis, Minnesota 55420

PRODUCT CHANGES

In an effort to make improvements available to Toro owners as quickly as possible, minor changes are incorporated into Toro's products from time to time that do not become immediately shown in the Parts Catalog. If such a change apparently has been made in your unit, which is not reflected in your manual, see your Toro distributor or his authorized Toro service dealer for information and parts numbers.

MAINTENANCE RECORD

TORO®

We Take Care™

MAINTENANCE RECORD
