Form No. 3421-101 Rev B

TORO®

Count on it.

Parts Catalog

Homologation Kit

Groundsmaster® 4500-D, 4700-D or Reelmaster® 7000-D Traction Unit

Model No. 30667

Register at www.Toro.com.
Original Instructions (EN)

CE

3421-101 B

Ordering Replacement Parts

To order replacement parts, please supply the part number, the quantity, and the description of each part desired.

Understanding Reference Numbers

Each identified part in an illustration has a reference number. The reference number for a part also appears in the parts list, along with other information about the part.

This catalog uses two special reference number formats, one to indicate parts in a service assembly and another to indicate the quantity of a given part in an illustration.

Service Assembly Reference Numbers

Parts in service assemblies have reference numbers in the form a:b. The a represents the reference number of the entire service assembly and the b represents a sequential number unique to each part within the service assembly.

For example, a wheel assembly might be identified by reference number 6, the tire by 6:1, the valve by 6:2, and the wheel by 6:3. When you order the assembly identified by reference number 6, you receive all parts identified by reference numbers 6:1,6:2, and 6:3. However, you may also order any part individually. Reference numbers of this type appear in illustration and in parts lists.

Reference Numbers Indicating Quantity

In an illustration, if a reference number indicates more than one part, the reference number has the form nX y. The n represents the quantity of the part, the X is the multiplication symbol, and the y represents the reference number.

For example, in an illustration, the reference number 2X 37 means that two of the parts identified by reference number 37 are indicated.

Contents

Homologation Assembly 4
Switch Assembly 6
License Plate Mount Assembly 7
Speed Plates Assembly 8

© 2019—The Toro® Company
8111 Lyndale Avenue South
Bloomington, MN 55420

Contact us at www.Toro.com.
Printed in the USA.
All Rights Reserved

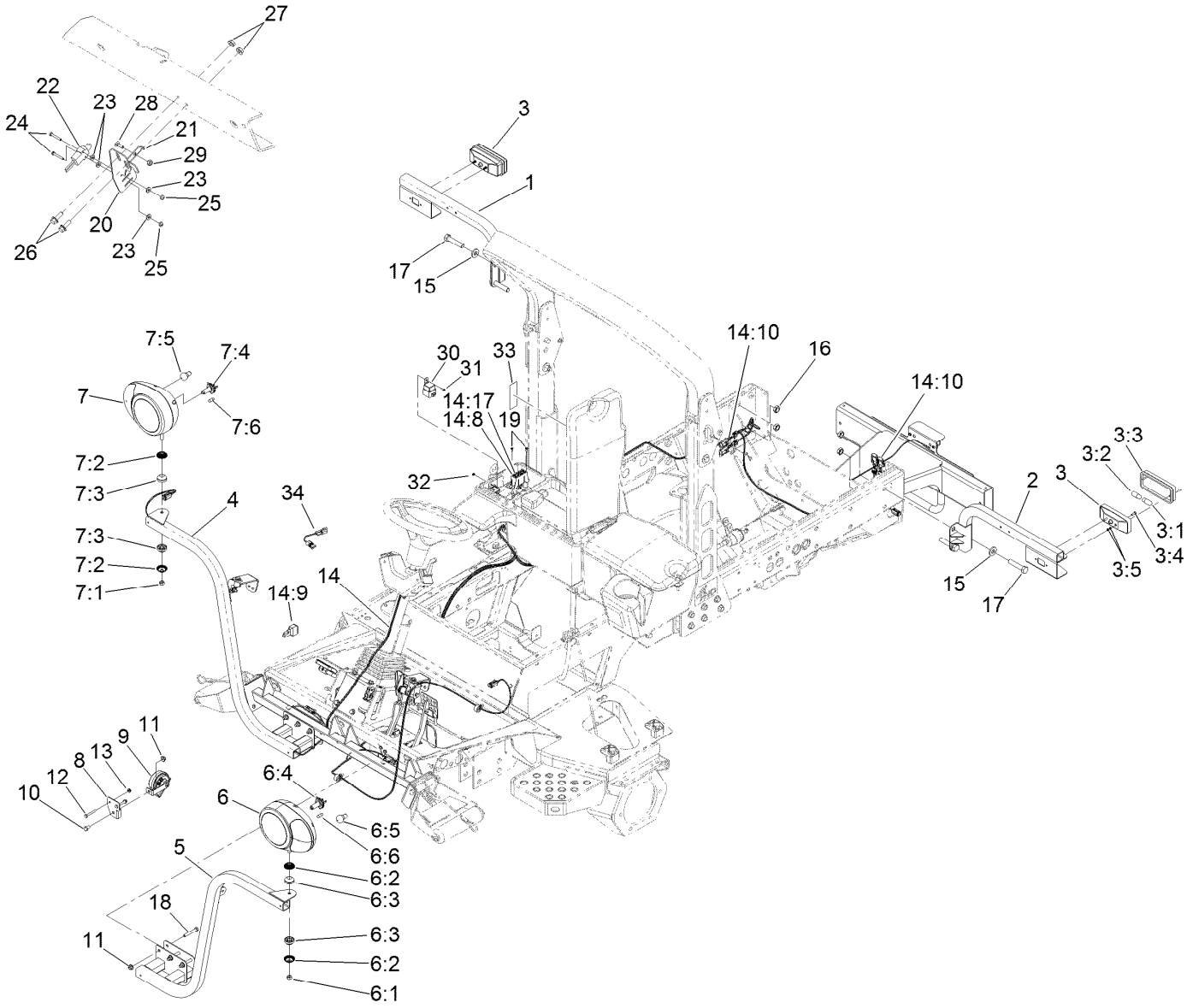

Homologation Assembly

Ref.	Part Number	Qty.	Description
1	125-4624-03	1	Bracket-Light, RH
2	125-4625-03	1	Bracket-Light, LH
3	119-8093	2	Tail Light ASM
3:1	7228	1	Bulb-1156
3:2	108-8054	1	Bulb-1157
3:3	120-6656	1	Lens-Red/Amber
3:4	60-6910	2	Screw-HH
3:5	48-7880	4	Nut-Hex
4	131-7783-03	1	Bracket-Right, Front
5	131-7782-03	1	Bracket-Left, Front
6	119-8324	1	LH Headlamp ASM
6:1	33025-00	1	Nut-Lock, NI
6:2	120-0475	2	Shell-Articulated
6:3	120-0474	2	Joint-Articulated
6:4	120-0471	1	Bulb-Halogen
6:5	120-0472	1	Bulb-Lamp
6:6	120-0473	1	Bulb-Lamp
7	119-8323	1	RH Headlamp ASM
7:1	33025-00	1	Nut-Lock, NI
7:2	120-0475	2	Shell-Articulated
7:3	120-0474	2	Joint-Articulated

Ref.	Part Number	Qty.	Description
7:4	120-0471	1	Bulb-Halogen
7:5	120-0472	1	Bulb-Lamp
7:6	120-0473	1	Bulb-Lamp
8	125-4645-03	1	Bracket-Horn
9	116749	1	Horn
10	323-34	1	Screw-HH
11	104-8301	7	Nut-HF, NI
12	321-11	2	Screw-HH
13	104-7201	2	Nut-HF
14	122-0747	1	Harness-Wire
14:8	218-578	3	Fuse-Blade, 10 Amp
14:9	100-4918	2	Diode
14:10	121-8864	4	Fuse-Mini Blade, 5 Amp
14:17	109355	1	Fuse-Blade, 15 Amp
15	99-7667	4	Washer-Flat
16	3218-6	4	Nut-Jam
17	115-4841	4	Screw-HH
18	323-12	6	Screw-HH
19	32144-87	2	Screw-HWHTF
20	131-7753-03	1	Bracket-Mount, Sensor
21	131-7754	1	Plate-Switch

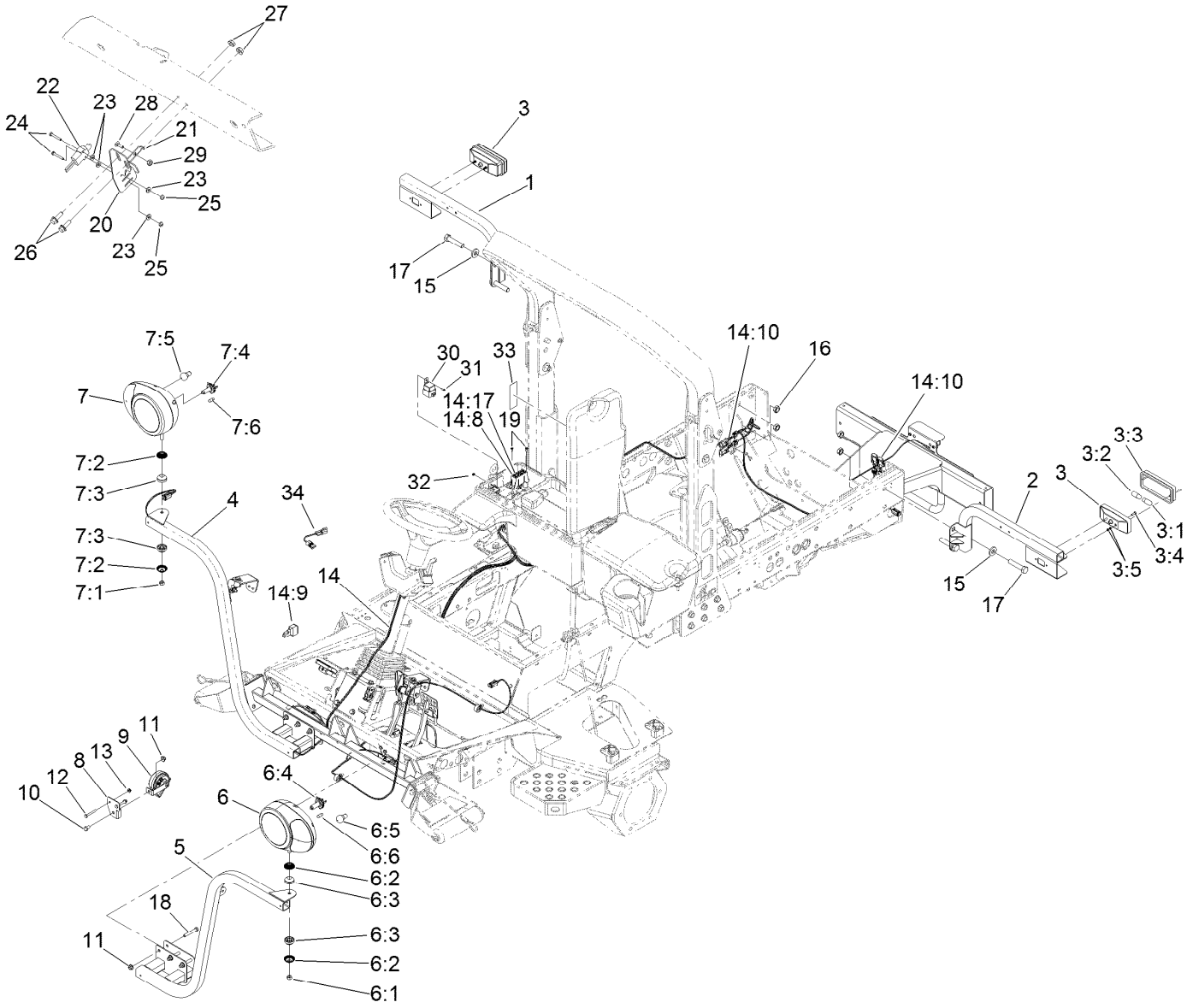

Homologation Assembly (continued)

Ref.	Part Number	Qty.	Description
22	95-8900	1	Switch
23	3256-21	4	Washer-Flat
24	32105-9	2	Screw
25	3296-9	2	Nut-Hex
26	3234-4	2	Screw-HHF
27	32128-33	2	Nut-HF
28	3229-34	1	Screw-CARR

Ref.	Part Number	Qty.	Description
29	3296-2	1	Nut-Lock, NI
30	99-7430	1	Relay-Mini
31	112-3169	1	Screw-HHF, Serrated
32	3296-54	1	Nut-Lock
33	131-7767	1	Decal-Fusebox
34	122-1788	1	Harness-Wire

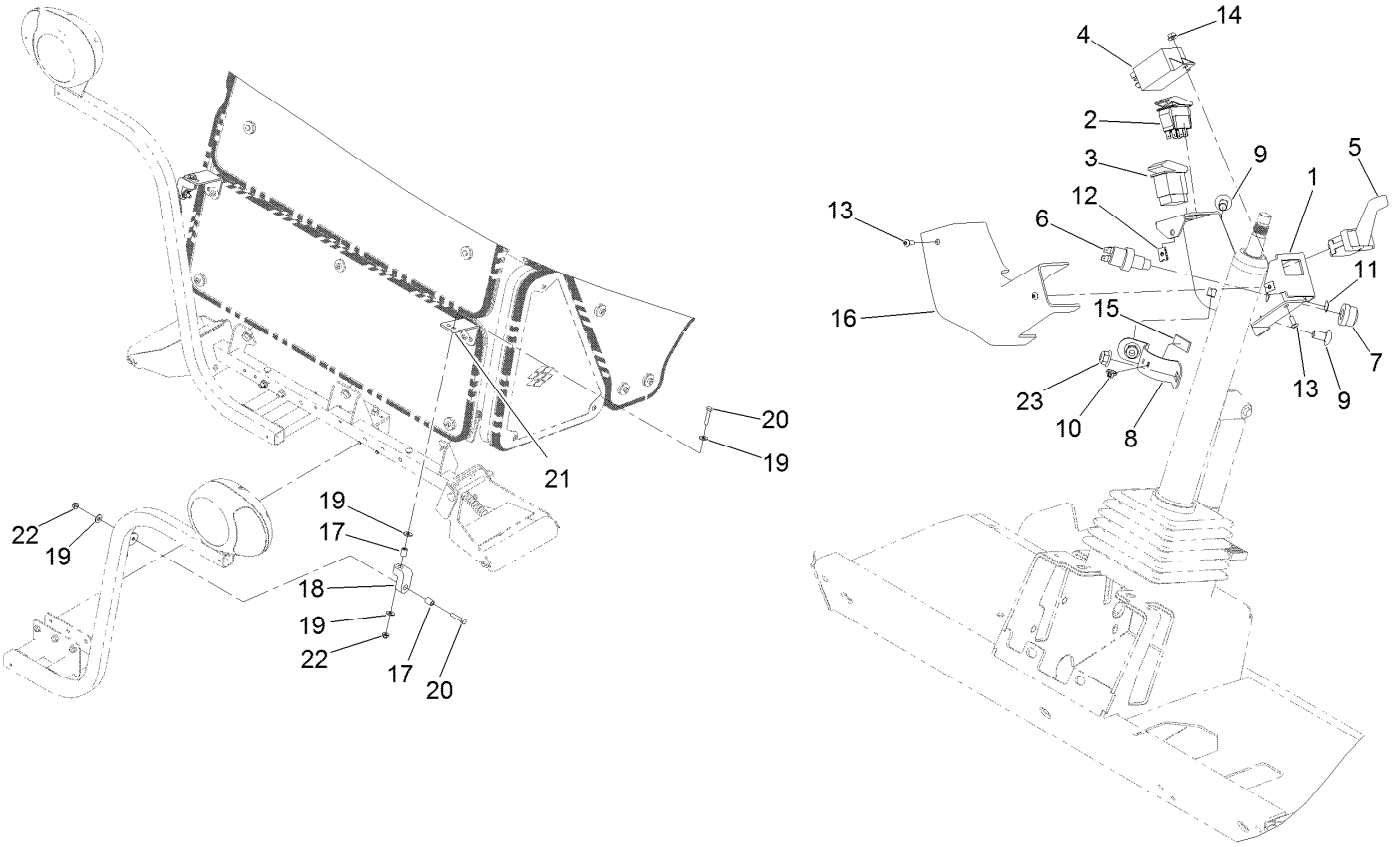

Switch Assembly

Ref.	Part Number	Qty.	Description
1	131-7784-03	1	Bracket-Column
2	119-7769	1	Switch-Rocker, On/None/On
3	95-8999	1	Switch
4	119-9880	1	Module-Flasher
5	120-3953	1	Switch-Paddle, On/Off/On
6	112-3324	1	Switch-Horn
7	112-3313	1	Nut-Weatherproof
8	131-7786	1	Mount-Bracket, Column
9	3231-21	2	Screw-CARR
10	1-303287	1	Tie-Cable
11	104-6957	1	Decal-Horn
12	701493	2	Nut-Speed

Ref.	Part Number	Qty.	Description
13	115-9830	3	Screw-HSBH
14	32128-17	1	Nut-Lock, Flange
15	115-5417	1	Strip-Foam
16	131-7785	1	Cover-Column
17	93-5023	4	Spacer
18	95-5622	2	Hanger-Rubber
19	3256-3	8	Washer-Flat
20	322-8	4	Screw-HH
21	132-3262-03	2	Plate-Bent, Bracket
22	104-8300	4	Nut-HF, NI
23	104-8301	2	Nut-HF, NI

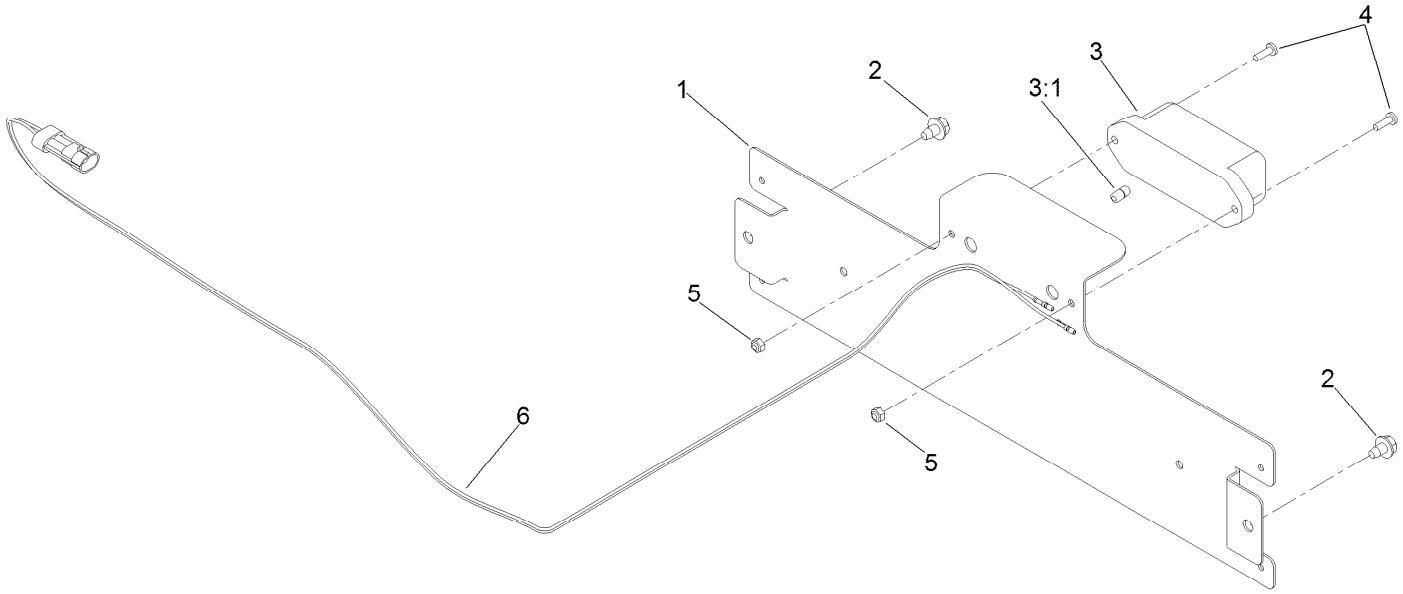

License Plate Mount Assembly

Ref.	*Part Number*	*Qty.*	*Description*
1	119-9861-03	1	Bracket-Plate
2	9266934	2	Screw
3	119-8091	1	Light-Plate
3:1	120-7564	1	Bulb-12W
4	3290-500	2	Screw-PPH
5	3296-2	2	Nut-Lock, NI
6	122-0146	1	Harness-Wire

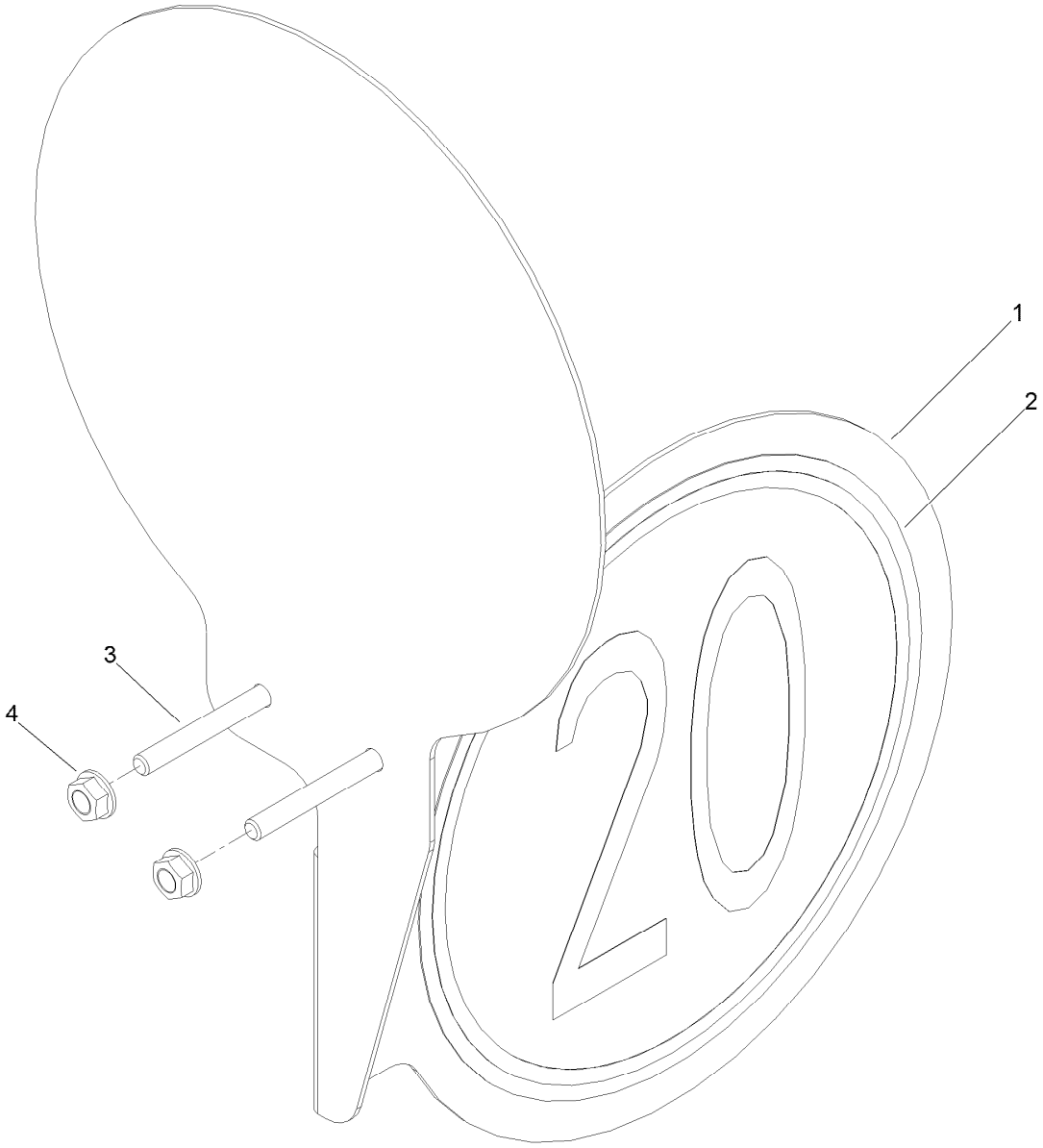

Speed Plates Assembly

Ref.	*Part Number*	*Qty.*	*Description*
1	131-7771-03	2	Mount-Decal, Bent Plate
2	111-4247	4	Sign-20K
3	3234-34	4	Screw-HHF
4	32128-33	4	Nut-HF

Notes:

Notes:

Notes:



Count on it.