Form No. 3324–264

62” Side Discharge Cutting Unit

Model No. 30551—200000001 and Up

Parts Catalog

Ordering Replacement Parts

To order replacement parts, please supply: the part number, the quantity, and the description of each part desired.

Understanding Reference Numbers

Each identified part in an illustration has a reference number. The reference number for a part also appears in the parts list, along with other information about the part.

This catalog uses two special reference number formats, one to indicate parts in a service assembly and another to indicate the quantity of a given part in an illustration.

Service Assembly Reference Numbers

Parts in service assemblies have reference numbers in the form **a:b.** The **a** represents the reference number of the entire service assembly and the **b** represents a sequential number unique to each part within the service assembly.

For example, a wheel assembly might be identified by reference number **6**, the tire by **6:1**, the valve by **6:2**, and the wheel by **6:3**. When you order the assembly identified by reference number 6, you receive all parts identified by reference numbers 6:1, 6:2, and 6:3. However, you may also order any part individually.

Reference numbers of this type appear in illustrations and in part lists.

Reference Numbers Indicating Quantity

In an illustration, if a reference number indicates more than one part, the reference number has the form **nX y.** The **n** represents the quantity of the part, the **X** is the multiplication symbol, and the **y** represents the reference number.

For example, in an illustration, the reference number **2X 37** means that two of the parts identified by reference number 37 are indicated.

© The TORO Company — 2000
All Rights Reserved

Contents

Description	Page
Roller And Drive Assembly	3
Deck Assembly No. 100–6550	4
Gear Box Assembly No. 68–6810	5
Spindle And Blade Assembly	6
Covers And Deflector Assembly	7
Lift Arm And Castor Arm Assembly	8,9
Counterbalance Assembly	10

Accessories

Description	Model / Part No.
Rear Weight Kit	Part No. 24–5780
Leaf Mulching Kit	Model No. 30792
Leaf Mulcher Discharge Plate	Part No. 5–0700
Phenolic Castor Wheels	Part No. 40–0370
Front Baffle Kit	Part No. 82–8800
High Lift Blades	Part No. 77–6710

Part Description Abbreviations

Part descriptions in this catalog may include the following abbreviations.

Abbreviation	Meaning
AR	as required
ASM	assembly
CARR	carriage
DEG	degrees
FH	flat head
GA	gauge
HF	hex flange
HH	hex head
HHF	hex head flange
HLH	hex lag head
HJ	hex jam
HOC	height-of-cut
HS	hex socket
HSBH	hex socket button head
HSFH	hex socket flat head
HSH	hex socket head
HWH	hex washer head
HWHTF	hex washer head thread forming
INC	incorporated
LH	left hand
NI	nylon insert
PPH	Phillips pan head
PTH	Phillips truss head
PTO	power take off
RH	right hand
SFH	slotted fillister head
SHH	slotted hex head
SQH	square head
SHWH	slotted hex washer head
SPH	slotted pan head
SRH	slotted round head
STD	standard
TAP	self tapping
TTH	Torx truss head
WH	wing head

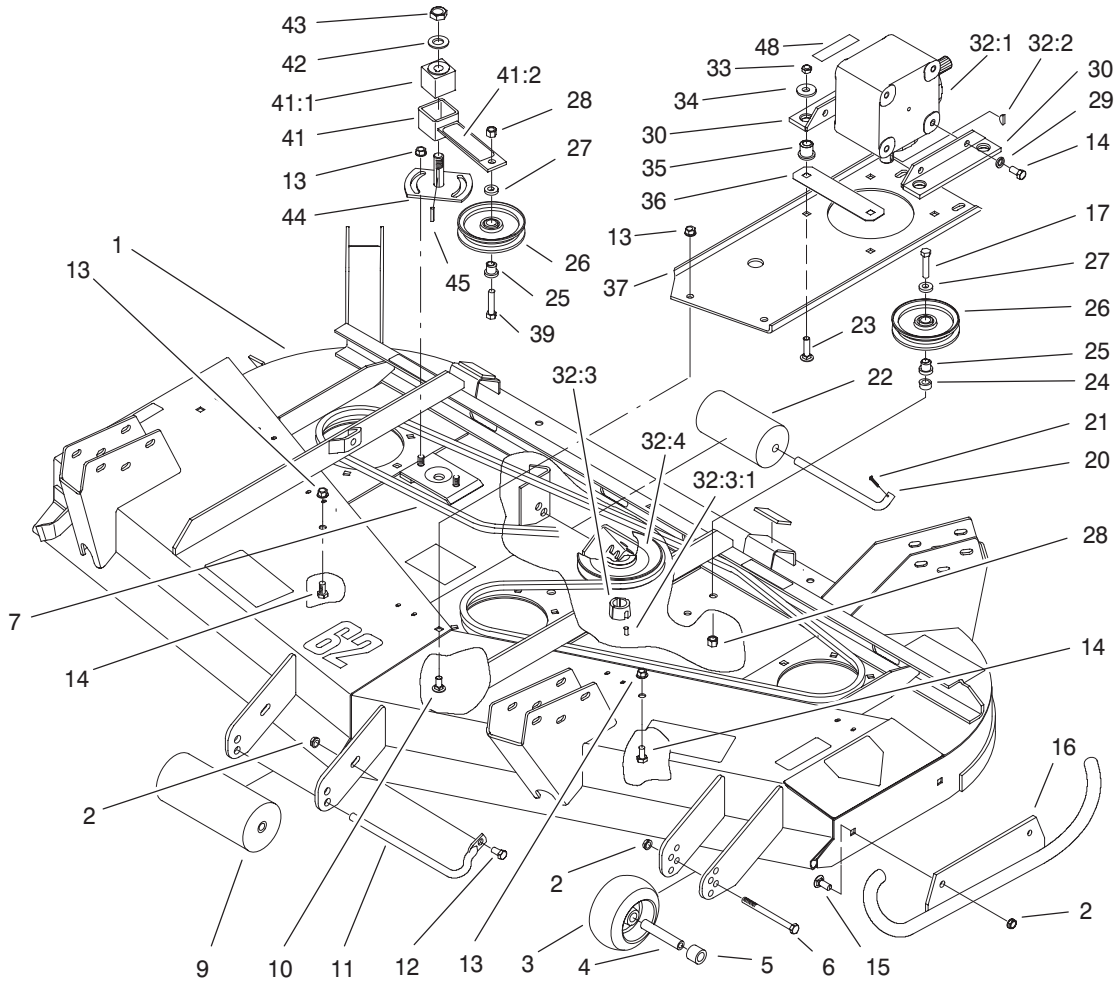

Sheet No.:2

Roller And Drive Assembly

Ref. No.	Part No.	Qty.	Description
1	100–6550	1	Deck ASM
2	32128–19	4	Nut–HF
3	68–2730	1	Wheel–Gage
4	98–7912	1	Tube–Spanner
5	98–7913	1	Tube–Spacer
6	323–23	1	Screw–HH
7	44–6260	1	V Belt
9	68–6710	1	Roller
10	3231–27	4	Screw–CARR
11	68–6840	1	Shaft–Roller
12	3234–11	1	Screw–HHF
13	3290–357	8	Nut–Flange, Lock
14	323–4	6	Screw–HH
15	3231–22	2	Screw–CARR
16	99–1252–01	1	Skid ASM
17	3211–9	1	Screw–HH
20	40–0340	2	Shaft–Roller, Rear
21	3272–11	2	Pin–Cotter
22	36–1740	2	Roller–Deck
23	3231–26	4	Screw–CARR
24	44–6390	1	Spacer
25	65–5950	2	Bushing–Pulley
26	65–5940	2	Pulley–Idler
27	7–0081	2	Washer–Flat
28	3296–5	2	Nut–Lock, NI
29	3253–21	4	Washer–Lock

Ref. No.	Part No.	Qty.	Description
30	68–8560–03	2	Bracket–Gearbox
32:1	68–6810	1	Gearbox
32:2	3257–5	1	Key–Woodruff
32:3	27–6140	1	Bushing–Lock, Taper
32:3:1	3245–9	2	Screw–Set
32:4	63–9900	1	Pulley
33	32153–2	4	Nut–Lock
34	63–8410	4	Washer
35	63–9750	4	Mount
36	68–9890–01	1	Cover–Gearbox, Front
37	72–9310–01	1	Base–Gearbox
39	3211–8	1	Screw–HH
41	100–6178	1	Idler Arm ASM
41:1	27–8490	1	Bushing–Rubber, Idler
41:2	100–6578	1	Decal–Danger
42	3256–27	1	Washer–Flat
43	3296–33	1	Nut–Lock, NI
44	44–6300	1	Plate–Idler
45	5–1077	1	Key–Square
48	93–6697	1	Decal – Lube
*99	95–3071	1	Blade & Belt Kit
*99:1	44–6260	1	V Belt
*99:2	44–6250	3	Blade

* Not illustrated

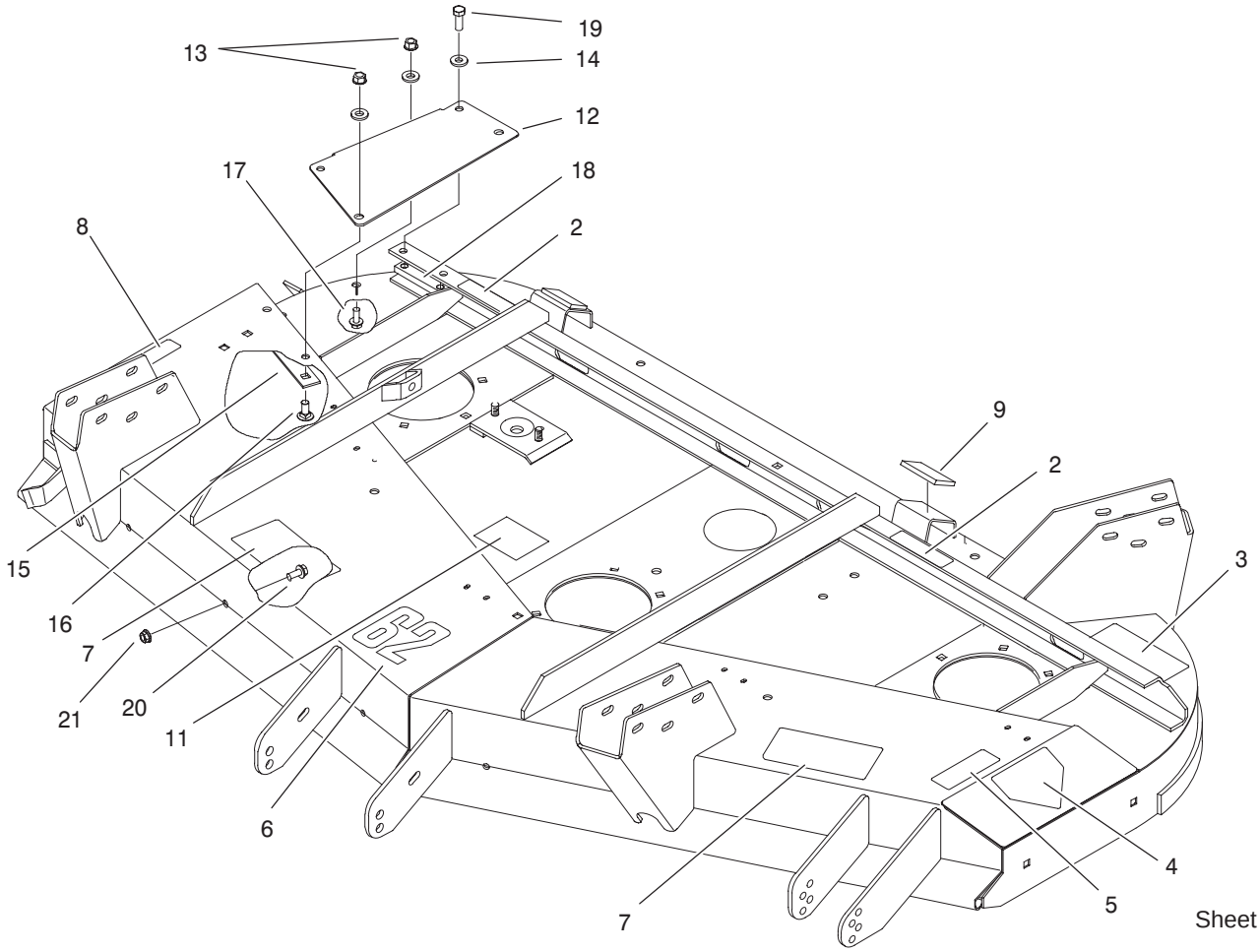

Sheet No.:A1
T–3538

Deck Assembly No. 100–6550

Ref. No.	Part No.	Qty.	Description
2	100–6578	2	Decal–Danger
3	93–7811	1	Decal – Warning
4	100–6582	1	Decal–Danger
5	93–7818	1	Decal–Torque, Blade Bolt
6	66–1630	1	Decal – 62
7	93–7824	2	Decal–Danger, Int'l
8	100–6553	1	Decal–Danger
9	74–0340	2	Cushion–Rubber
11	99–5172	1	Decal–Routing, Belt
12	99–5161–01	1	Plate – Stiffener
13	3296–39	4	Nut–Lock, NI
14	5–0838	6	Washer
15	99–5157	1	Plate – Reinforcement
16	3231–22	2	Screw–CARR
17	3234–11	2	Screw–HHF
18	99–5158	1	Block – Tapped
19	323–6	2	Screw–HH
20	3234–5	6	Screw–HHF
21	32128–20	6	Nut–HF

Ref. No.	Part No.	Qty.	Description

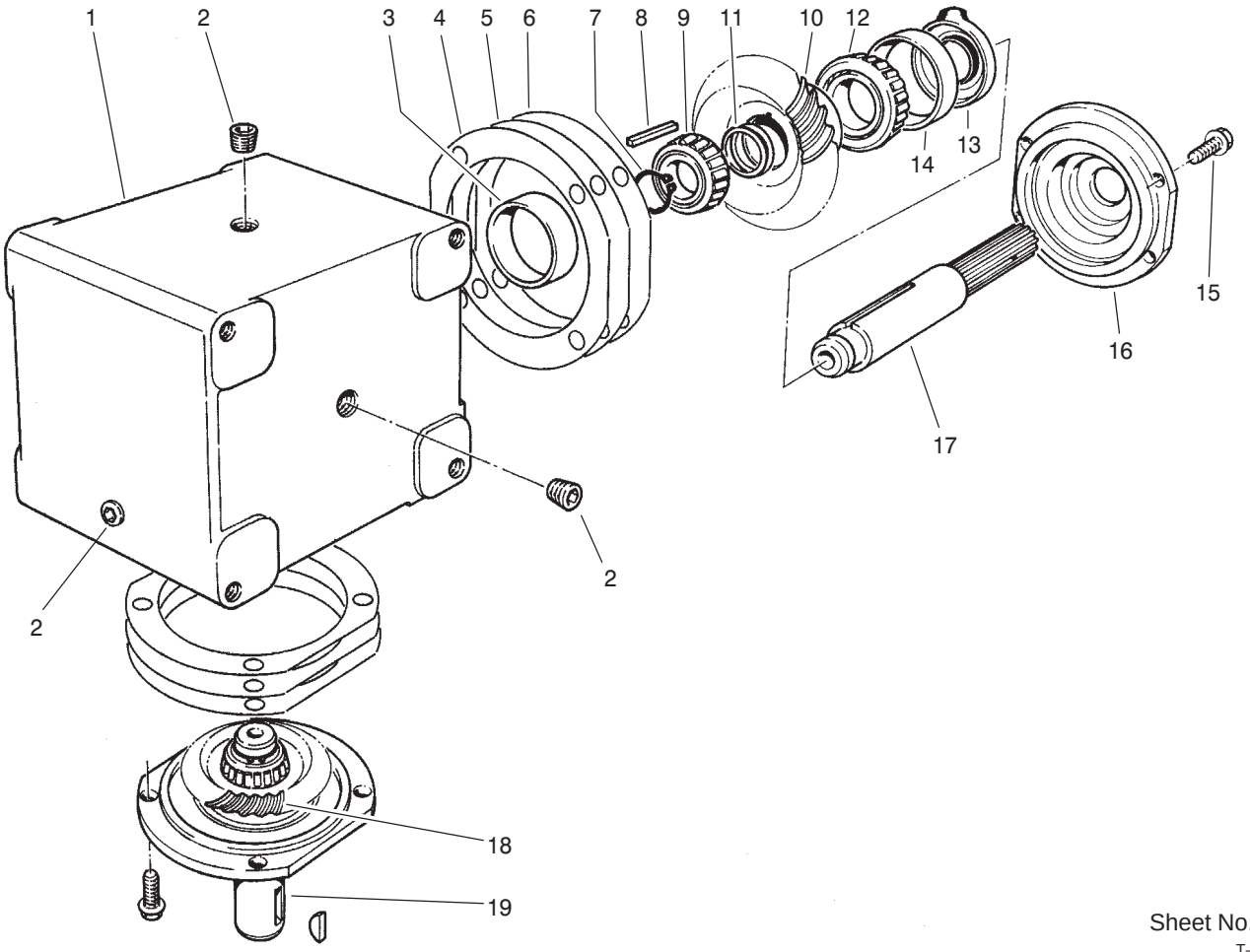

Sheet No.:A2
T–0977

Gear Box Assembly No. 68–6810

Ref. No.	Part No.	Qty.	Description
1	68–7030	1	Housing
2	62–3490	4	Plug
3	62–3360	2	Cup–Bearing
4	62–3420	2	Gasket
5	62–3430	2	Gasket
6	62–3440	2	Gasket
7	68–7070	2	Ring–Retaining
8	62–3380	2	Key
9	62–3370	2	Cone
10	68–7080	1	Gear
11	72–9370	4	Shim
12	62–3330	1	Cone
13	62–3400	2	Seal
14	62–3340	2	Cup
15	62–3310	8	Screw–HH
16	62–3410	2	Cap
17	68–7040	1	Shaft
18	68–7060	1	Gear
19	68–7050	1	Shaft

Ref. No.	Part No.	Qty.	Description

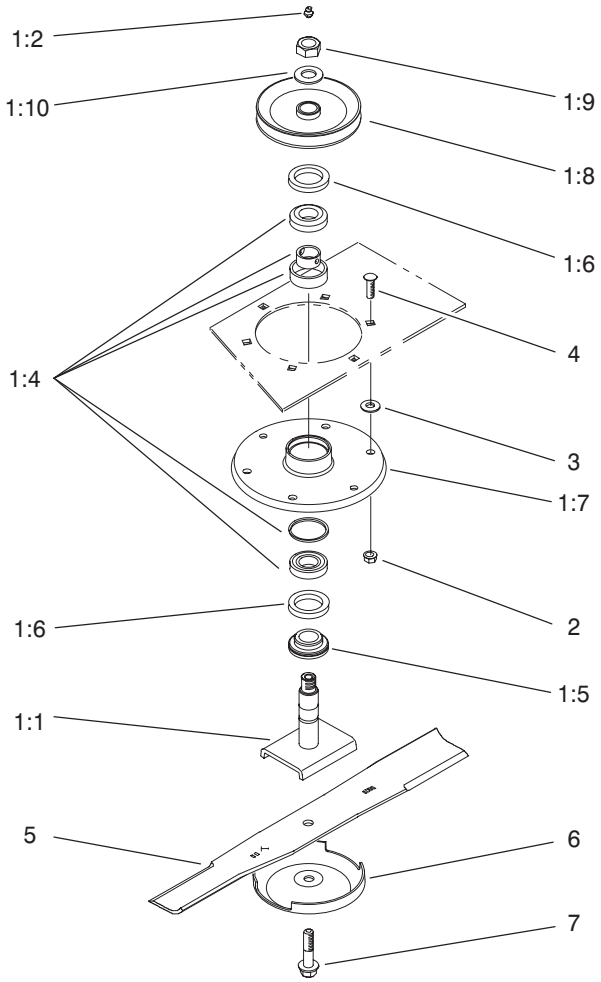

Sheet No.:3

Spindle And Blade Assembly

Ref. No.	Part No.	Qty.	Description
*1		3	Spindle ASM
1:1	27–0920	1	Shaft–Spindle
1:2	302–2	1	Fitting–Grease
1:4	46–8530	1	Bearing ASM
1:5	27–0950	1	Spacer–Bearing, Spindle
1:6	253–139	2	Seal–Oil
1:7	61–4160	1	Spindle
1:8	44–6340–03	1	Pulley ASM
1:9	32146–20	1	Nut–Jam
1:10	7–4150	1	Washer–Pinion
2	3231–22	18	Screw–CARR
3	3256–24	2	Washer–Flat
4	32128–21	18	Nut–HF
5	44–6250–03	3	Blade
6	72–9361	3	Cup–Scalp, Anti
7	92–5816	3	Bolt–Blade
*99	95–3079	1	Spindle Kit
*99:1	44–6370–03	1	Spindle ASM
*99:2	3231–22	6	Screw–CARR
*99:3	32128–21	6	Nut–HF
*99:4	3256–24	6	Washer–Flat
*99:5	92–5816	1	Bolt–Blade
*99:6	72–9361	1	Cup–Scalp, Anti

Ref. No.	Part No.	Qty.	Description

* Not illustrated

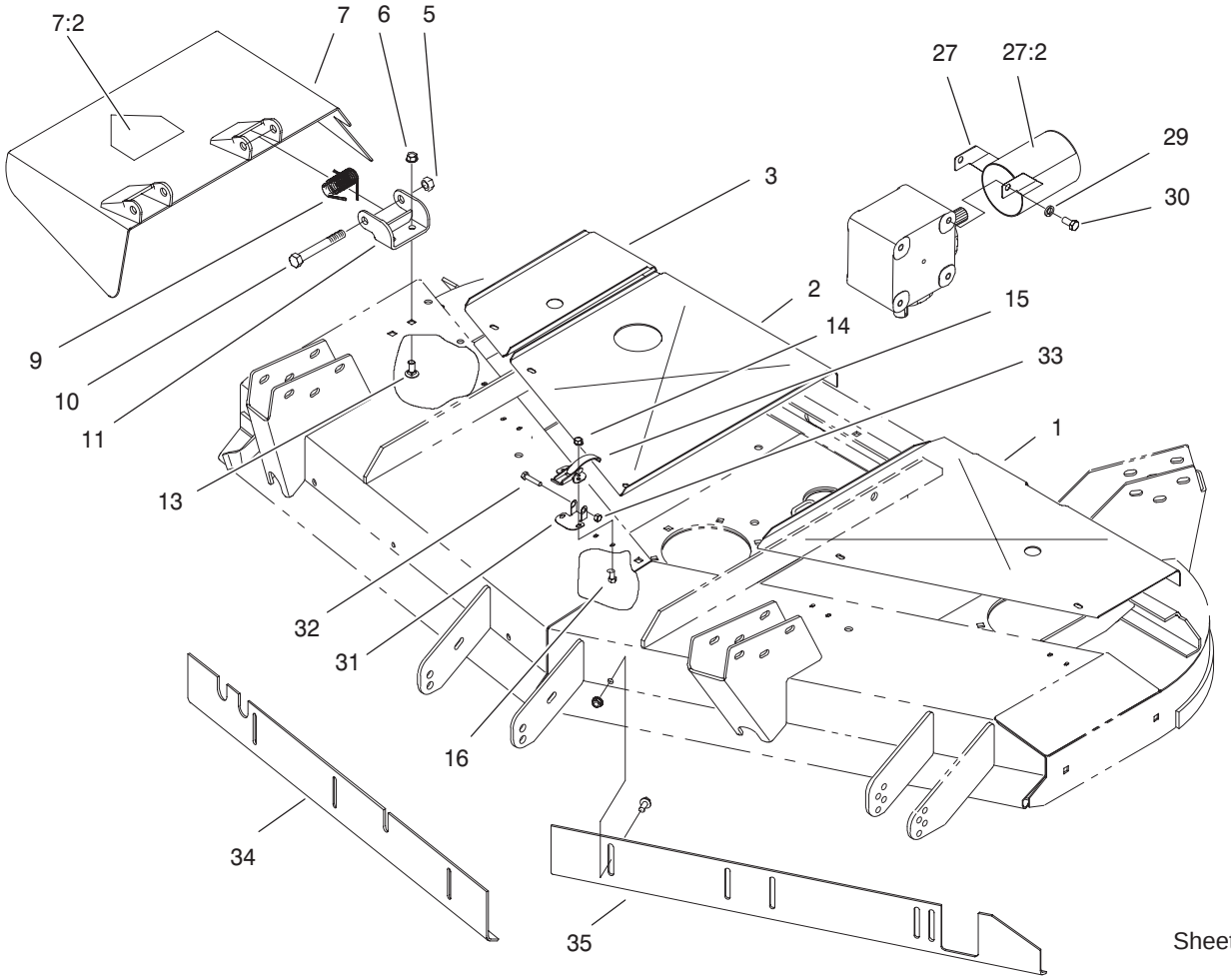

Sheet No.:4

Covers And Deflector Assembly

Ref. No.	Part No.	Qty.	Description
1	99–1294–01	1	Cover – Belt, LH
2	72–9320–01	1	Center Deck Cover
3	99–5163–01	1	Cover – Belt, RH
5	32153–5	2	Nut–Lock
6	3290–357	4	Nut–Flange, Lock
7	100–6181	1	Deflector ASM
7:2	100–6582	1	Decal–Danger
9	51–1550	2	Spring
10	325–17	2	Screw–HH
11	51–1530–01	2	Bracket–Hinge
13	3231–27	4	Screw–CARR
14	32128–17	10	Nut–Flange, Lock
15	249–21	5	Clamp–Slotted
16	3290–321	10	Screw–HWH
27	99–8408	1	PTO Guard ASM
27:2	93–7283	1	Decal–Danger
29	3253–21	2	Washer–Lock
30	323–2	2	Screw–HH
31	93–7043	3	Retainer–Latch
32	321–8	3	Screw–HH
33	3296–56	3	Nut–Lock, NI
34	82–8820–01	1	Baffle–Front RH
35	99–5152–01	1	Baffle–Front LH

Ref. No.	Part No.	Qty.	Description

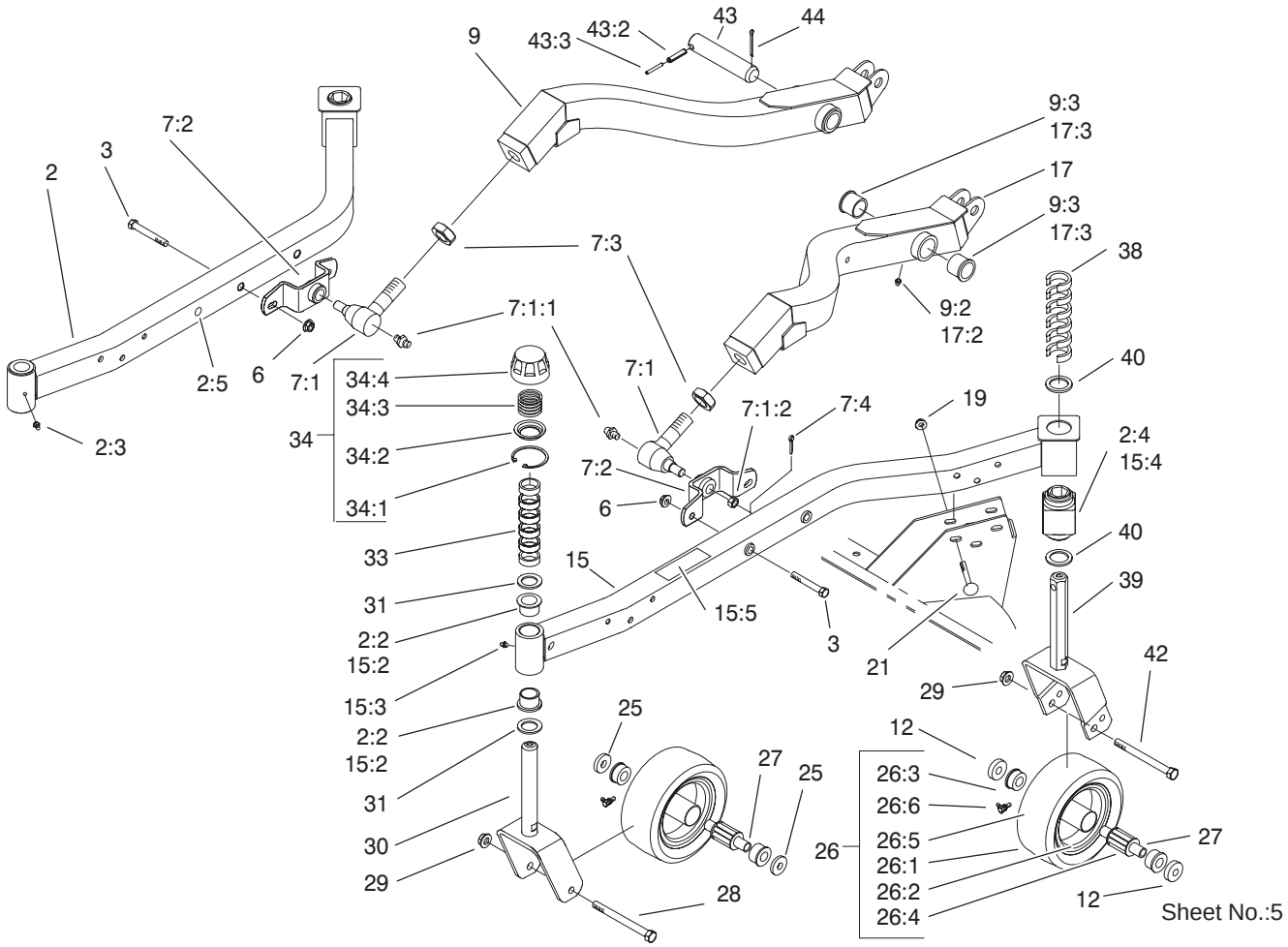

Lift Arm And Castor Arm Assembly

Ref. No.	Part No.	Qty.	Description
2	99–1262	1	RH Castor Arm ASM
2:2	94–1291	2	Bushing–Special
2:3	302–5	1	Fitting–Lube
2:4	93–8471	1	Bushing–Rubber, Square
2:5	3290–469	1	Clinch Nut
3	324–12	4	Screw–HH
6	32128–42	4	Nut–HF
7:1	86–8100	1	Joint–Ball
7:1:1	302–5	1	Fitting–Lube
7:1:2	32136–2	1	Nut – Shh
7:2	98–7944–01	1	Mount–Balljoint
7:3	21–3000	1	Nut–HJ, Push Arm
7:4	3272–12	1	Pin–Cotter
9	99–1254	1	Lift Arm ASM – RH
9:2	302–5	1	Fitting–Lube
9:3	256–268	2	Bushing
12	99–1291	4	Spacer
15	99–1265	1	LH Castor Arm ASM
15:2	94–1291	2	Bushing–Special
15:3	302–5	1	Fitting–Lube
15:4	93–8471	1	Bushing–Rubber, Square
15:5	92–3035	1	Decal–HOC
17	99–1257	1	Lift Arm ASM – LH
17:2	302–5	1	Fitting–Lube

Ref. No.	Part No.	Qty.	Description
17:3	256–268	2	Bushing
19	32128–19	12	Nut–HF
21	3231–10	12	Screw–CARR
25	70–8040	4	Washer
26	99–1268	4	Castor Wheel ASM
26:1	93–9939	2	Tire
26:2	100–2348	2	Rim Assembly
26:3	62–5580	4	Bearing–Outside
26:4	62–5570	2	Bearing–Roller
26:5	100–5832	2	Tube w/ Valve
26:6	302–11	2	Fitting–Lube, 45°
27	68–8980	4	Spanner–Tire
28	325–19	2	Screw–HH
29	32128–23	4	Nut–HF
30	98–7921–01	2	Fork–Castor
31	3–6781	4	Washer–Thrust
33	63–0070	12	Spacer
34	92–8862	4	Cap ASM–HOC
34:1	92–5581	1	Ring–Retaining
34:2	92–5583	1	Washer–Cap
34:3	92–5584	1	Spring–Compression
34:4	92–8861	1	Cap–HOC
38	92–8866	12	Spacer
39	92–5578–01	2	Fork–Castor, Rear

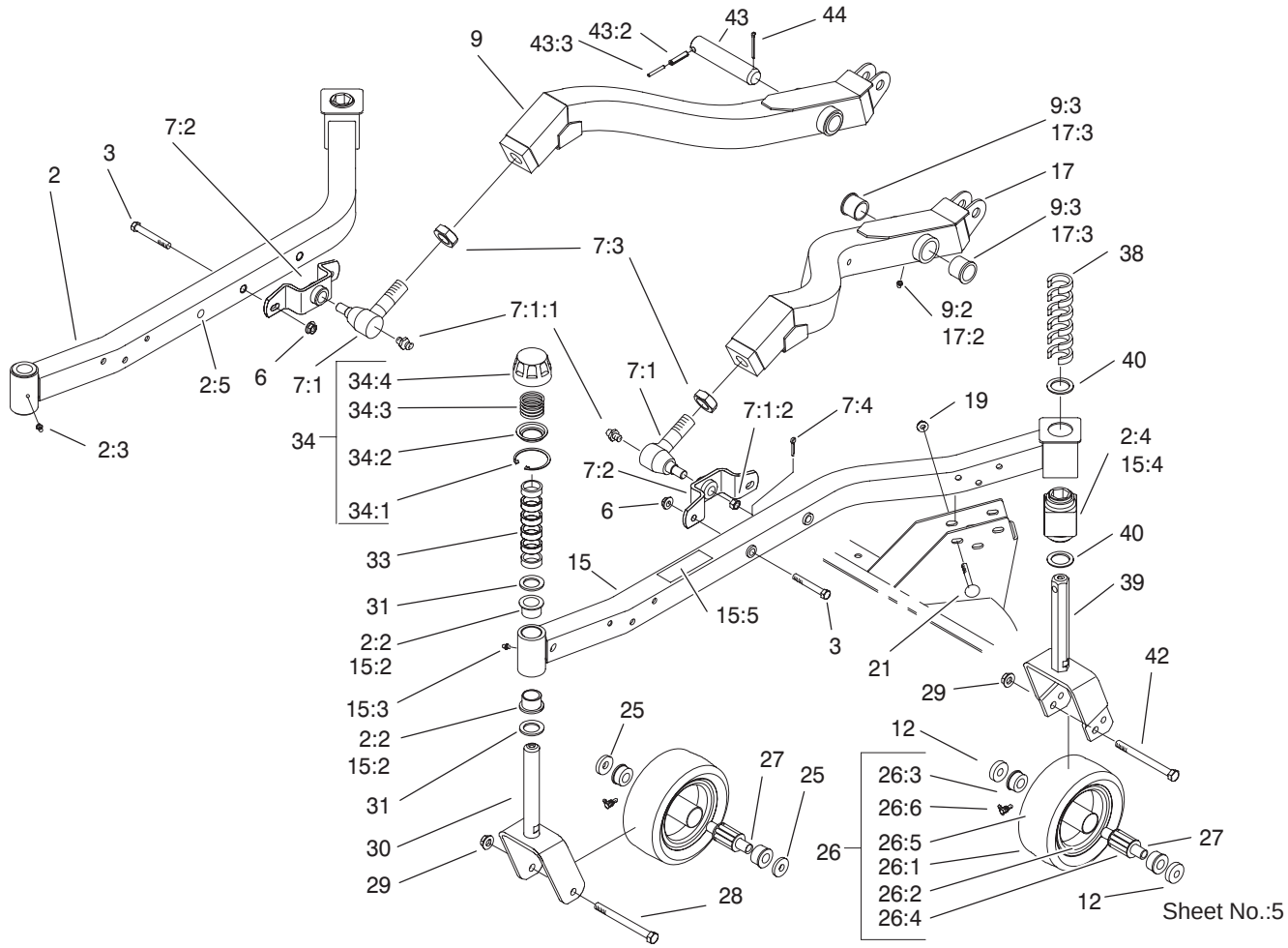

Lift Arm And Castor Arm Assembly (Continued)

Ref. No.	Part No.	Qty.	Description
40	92–1765	4	Washer – Thrust
42	325–22	2	Screw–HH
43	98–2330	2	Pivot Pin ASM
43:2	32121–67	1	Pin–Roll
43:3	32121–61	1	Pin–Roll
44	3272–19	2	Pin–Cotter

Ref. No.	Part No.	Qty.	Description

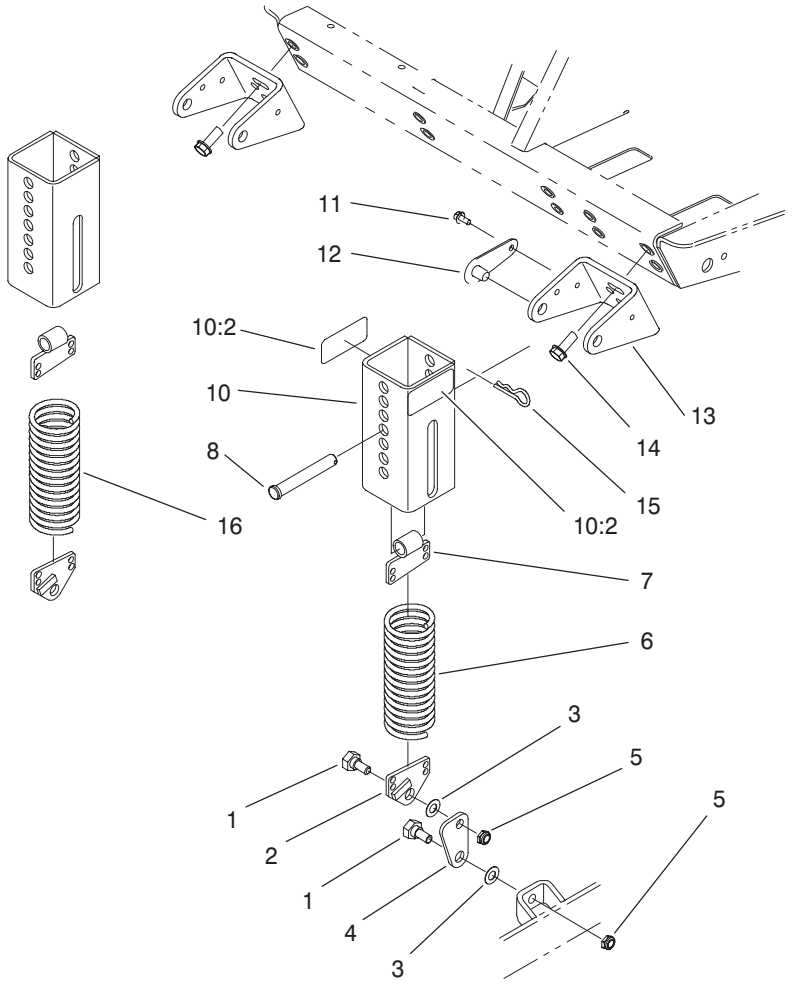

Sheet No.:6

Counterbalance Assembly

Ref. No.	Part No.	Qty.	Description
1	46–3380	4	Bolt–Shoulder
2	66–8420–03	2	End–Spring
3	3256–24	4	Washer–Flat
4	66–8440–01	2	Knee Link
5	3296–44	4	Nut–Lock NI
6	66–8390–03	1	Spring–Extension
7	70–7940–03	2	End–Spring
8	283–69	2	Clevis–Pin
10	100–6179	2	Spring Cover ASM
10:2	93–6696	2	Decal–Loaded, Spring
11	12–3270	4	Screw
12	70–7920	4	Pin–Lock
13	66–8230–01	2	Bracket–Support
14	3234–11	4	Screw–HHF
15	3290–355	2	Pin–Hair
16	66–8410–03	1	Spring–Extension

Ref. No.	Part No.	Qty.	Description

Maintenance Record

Date								


TORO®