Form No. 3437-673 Rev A

TORO®

Count on it.

Parts Catalog

Groundsmaster® 7200 Series

Traction Unit

Model No. 30495—Serial No. 405700000 and Up

Register at www.Toro.com.
Original Instructions (EN)

CE

3437-673 A

Ordering Replacement Parts

To order replacement parts, please supply the part number, the quantity, and the description of each part desired.

Understanding Reference Numbers

Each identified part in an illustration has a reference number. The reference number for a part also appears in the parts list, along with other information about the part.

This catalog uses two special reference number formats, one to indicate parts in a service assembly and another to indicate the quantity of a given part in an illustration.

Service Assembly Reference Numbers

Parts in service assemblies have reference numbers in the form a:b. The a represents the reference number of the entire service assembly and the b represents a sequential number unique to each part within the service assembly.

For example, a wheel assembly might be identified by reference number 6, the tire by 6:1, the valve by 6:2, and the wheel by 6:3. When you order the assembly identified by reference number 6, you receive all parts identified by reference numbers 6:1,6:2, and 6:3. However, you may also order any part individually. Reference numbers of this type appear in illustration and in parts lists.

Reference Numbers Indicating Quantity

In an illustration, if a reference number indicates more than one part, the reference number has the form nX y. The n represents the quantity of the part, the X is the multiplication symbol, and the y represents the reference number.

For example, in an illustration, the reference number 2X 37 means that two of the parts identified by reference number 37 are indicated.

Contents

Rear Frame Assembly . . . 5
Engine Assembly . . . 6
Transmission and Gear Pump Assembly . . . 7
Charge Pump Housing Assembly Transmission Assembly No. 131-5510 . . . 8
Center Section Assembly Transmission Assembly No. 131-5510 . . . 10
Gear Case and Clutch Assembly Transmission Assembly No. 131-5510 . . . 12
Driveshaft Assembly No. 110-3575 . . . 14
Hydraulic Gear Pump Assembly No. 112-9542 . . . 15
Rear Drive Assembly . . . 16
Hydraulic Motor Assembly No. 108-5155 . . . 17
Hydraulic Motor Assembly No. 108-5230 . . . 18
LH Brake Caliper Assembly No. 120-0013 . . . 19
RH Brake Caliper Assembly No. 120-0014 . . . 20
Brake Handle Assembly . . . 21
Radiator and Oil Cooler Assembly . . . 22
Traction Control Assembly . . . 23
Link Assembly No. 112-5099 . . . 24
RH Lever Assembly No. 125-2687 . . . 25
Control Panel Assembly . . . 26
Left-Hand and Right-Hand Fuel Tank Assembly . . . 27
LH Fuel Tank Assembly No. 110-8230 . . . 28
RH Fuel Tank Assembly No. 110-8236 . . . 29
Fuel Filter / Separator Assembly . . . 30
Hood and Screen Assembly . . . 31
Seat and Seat Plate Assembly . . . 32
Seat Assembly No. 125-3107 . . . 33
Floorplate and Carrier Frame Assembly . . . 34
Carrier Frame Assembly No. 136-4466 . . . 35
Lift Valve and Cylinder Assembly . . . 36
Valve Assembly No. 131-1934 . . . 37
Hydraulic Cylinder Assembly No. 110-9834 . . . 38
Caster Wheel Assembly . . . 39
Caster Wheel Assembly No. 133-4723 . . . 40
Deck Lift Assembly . . . 41
Electrical Assembly . . . 42
Transmission and Oil Cooler Hydraulic Assembly . . . 43
Hydraulic Reservoir Assembly . . . 44
Hydraulic Reservoir Assembly No. 110-8237 . . . 45
Air Cleaner Assembly . . . 46
Air Cleaner Assembly No. 136-4481 . . . 47
Crankcase Assembly . . . 48
Oil Pan and Dipstick Assembly . . . 49
Cylinder Head Assembly . . . 50
Gear Case and Oil Filter Cartridge Assembly . . . 51
Cylinder Head Cover Assembly . . . 52
Main Bearing Case Assembly . . . 53
Camshaft and Idle Gear Shaft Assembly . . . 54
Piston and Crankshaft Assembly . . . 55
Fuel Camshaft and Governor Shaft Assembly . . . 56
Idle Apparatus Assembly . . . 57
Injection Pump Assembly . . . 58
Governor Assembly . . . 59
Speed Control Plate Assembly . . . 60
Nozzle Holder and Glow Plug Assembly . . . 61

© 2020—The Toro® Company

8111 Lyndale Avenue South
Bloomington, MN 55420

Contact us at www.Toro.com.
Printed in the USA.

All Rights Reserved

Contents (continued)

Nozzle Holder Assembly 62
Alternator, Pulley and Fan Assembly 63
Alternator Components Assembly 64
Starter and Flywheel Assembly 65
Starter Component Assembly 66
Water Flange and Thermostat Assembly 67
Water Pump Assembly 68
Valve and Rocker Arm Assembly 69
Inlet and Exhaust Manifold Assembly 70
Miscellaneous Engine Parts 71
Upper Gasket Kit 72
Lower Engine Gasket Kit 73
Attachments and Accessories 74

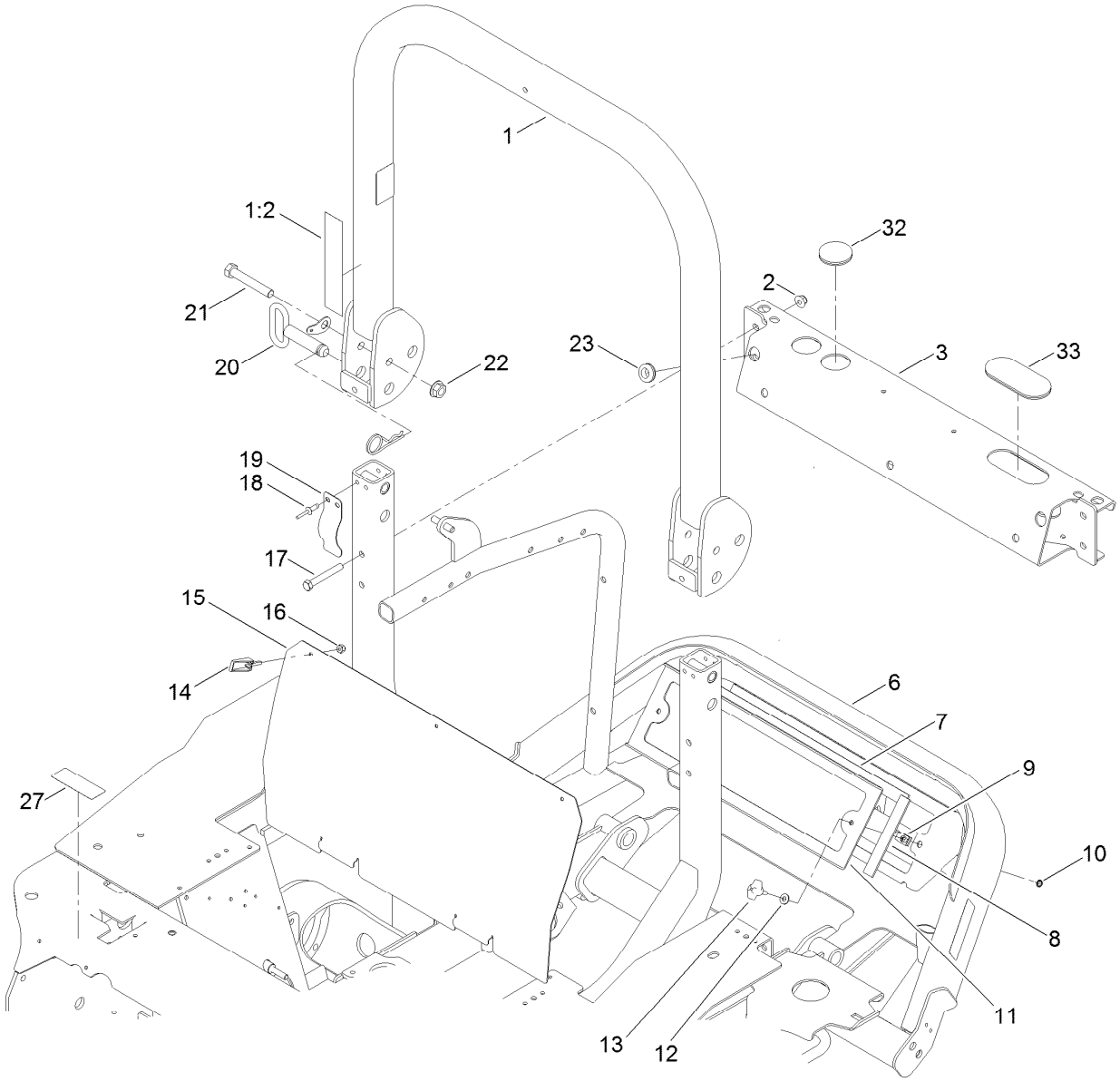

Rear Frame Assembly

Ref.	Part Number	Qty.	Description
1	110-9770	1	Upper ROPS ASM
1:2	107-3069	1	Decal-Warning
2	104-8301	4	Nut-HF, NI
3	132-8150	1	Crossmember ASM
6	125-2714-03	1	Frame-Rear
7	120-0019	2	Strip-Foam
8	120-0017	2	Strip-Foam
9	107069	2	Clip
10	32151-106	2	Ring-Retaining
11	112-6384-03	1	Screen
12	3256-22	2	Washer-Flat
13	98-8332	2	Knob
14	74-5950	3	Latch-Swell

Ref.	Part Number	Qty.	Description
15	125-2718-03	1	Panel-Rear
16	1-804254	3	Nut-Lock, HH
17	323-13	4	Screw-HH
18	3290-412	4	Rivet-Blind
19	110-5696	2	Spring-Leaf
20	103-4553	2	Pin-Fold, ROPS
21	112-7264	2	Screw-HH
22	32128-23	2	Nut-HF
23	237-124	2	Grommet
27	133-5618	1	Decal-Arrester, Spark
32	105-5761	2	Grommet
33	130-6086	1	Grommet

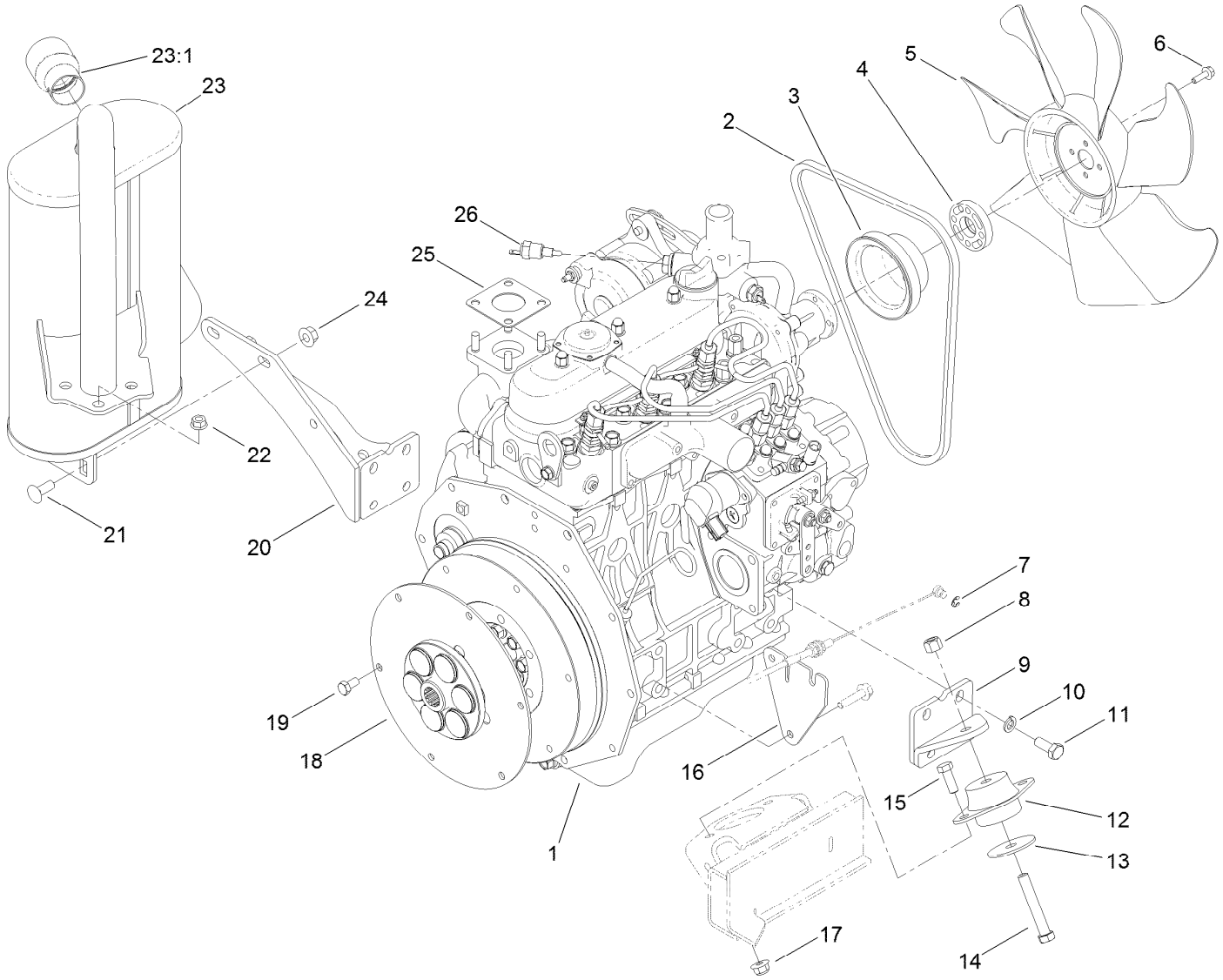

Engine Assembly

Ref.	Part Number	Qty.	Description
1	138-6907	1	Engine-Kubota, D1105
2	98-9676	1	V-Belt
3	98-9584	1	Pulley-Fan
4	108-2872	1	Collar-Fan
5	104-4246	1	Fan-Engine
6	33103-020	4	Screw-HHF
7	701197	1	E-Ring
8	3296-48	2	Nut-Hex
9	105-7235-03	1	Mount-Rear
10	48-9590	8	Washer-Lock
11	43-0090	8	Screw-HH
12	130-2486	2	Mount
13	87-5100	2	Washer-Snubbing
14	324-11	2	Screw-HH

Ref.	Part Number	Qty.	Description
15	323-6	4	Screw-HH
16	114-4060	1	Bracket-Throttle
17	104-8301	4	Nut-HF, NI
18	110-9729	1	Coupling-Flywheel
19	99-5132	6	Bolt
20	108-9926-03	1	Bracket-Muffler
21	3231-22	2	Screw-CARR
22	33004-00	4	Nut-HF
23	105-7230	1	Muffler
23:1	112-1688	1	Spark Arrestor Kit
24	32128-29	2	Nut-Lock, Flange
25	99-8343	1	Gasket-Muffler
26	98-9719	1	Thermoswitch

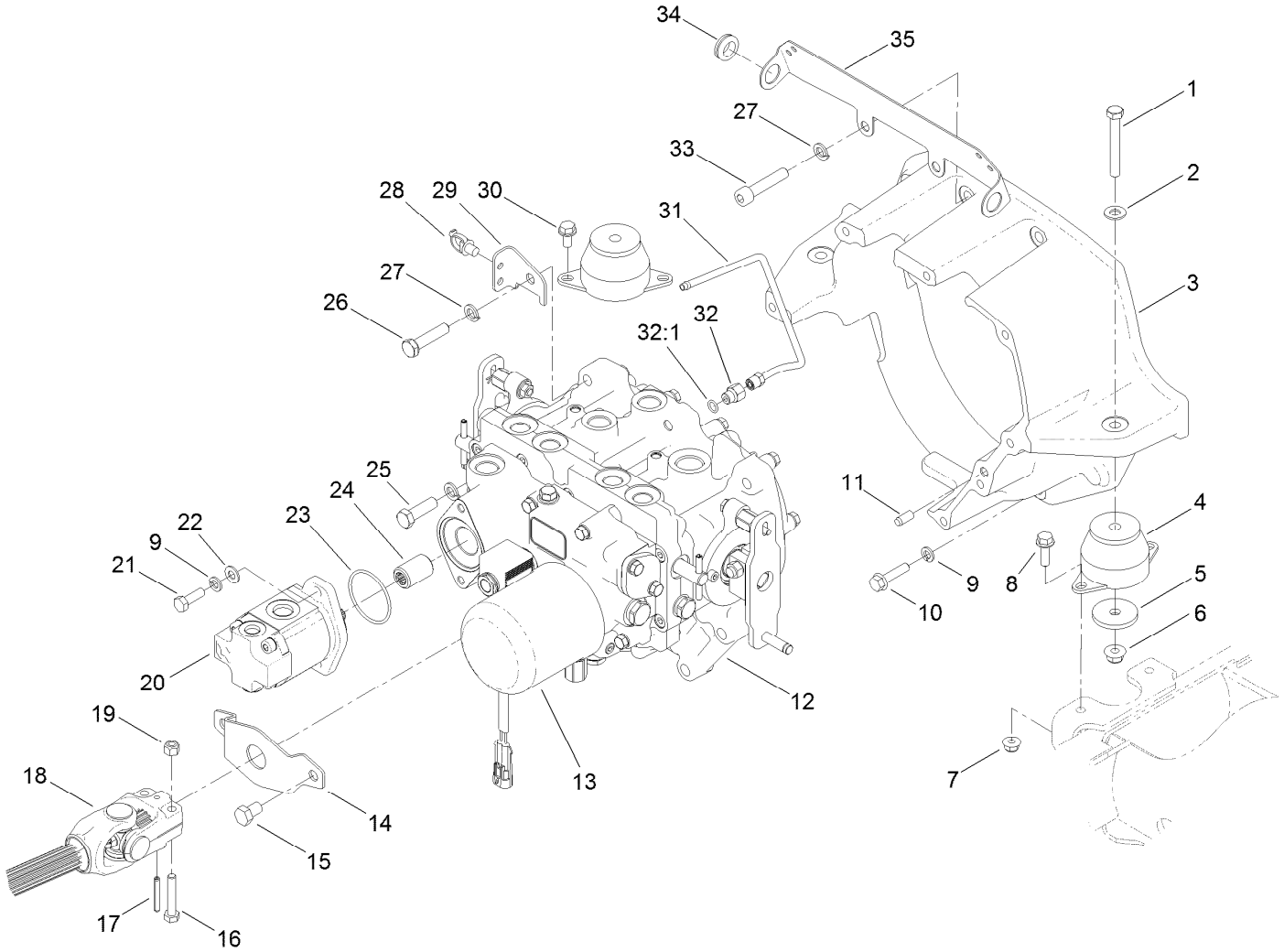

Transmission and Gear Pump Assembly

Ref.	Part Number	Qty.	Description
1	323-13	2	Screw-HH
2	3256-24	2	Washer-Flat
3	108-5193	1	Housing-Flywheel
4	107-2289	2	Mount-Motor
5	80-8560	2	Washer-Hardened
6	104-8301	2	Nut-HF, NI
7	104-8300	2	Nut-HF, NI
8	3234-17	2	Screw-HHF
9	3253-4	10	Washer-Lock
10	33104-035	8	Screw-HHF
11	87-1910	4	Pin-Dowel
12	131-5510	1	Transmisson ASM
13	108-5194	1	Filter-Oil, HYD
14	114-4088	1	Shield-Seal
15	33115-016	2	Screw-HH
16	322-9	4	Screw-HH
17	32121-34	2	Pin-Roll
18	110-3575	1	Driveshaft ASM

Ref.	Part Number	Qty.	Description
19	3296-29	4	Nut-Lock, NI
20	112-9542	1	HYD Gear Pump ASM
21	33114-025	2	Screw-HH
22	3256-23	2	Washer-Plain
23	108-9919	1	O-Ring
24	108-9920	1	Coupler-Spline
25	33115-035	1	Screw-HH
26	33115-045	6	Screw-HH
27	48-9590	9	Washer-Lock
28	32180-030	1	Clip-Tie
29	120-0239	1	Support-Tube
30	32144-14	2	Screw-HWHTF
31	110-5537	1	Tube
32	110-5536	1	Fitting-HYD, Adapter
32:1	237-78	1	O-Ring
33	3274-106	2	Screw-HSH
34	99-3481	2	Grommet
35	125-2716-03	1	Bracket-Wire

Charge Pump Housing Assembly
Transmission Assembly No. 131-5510

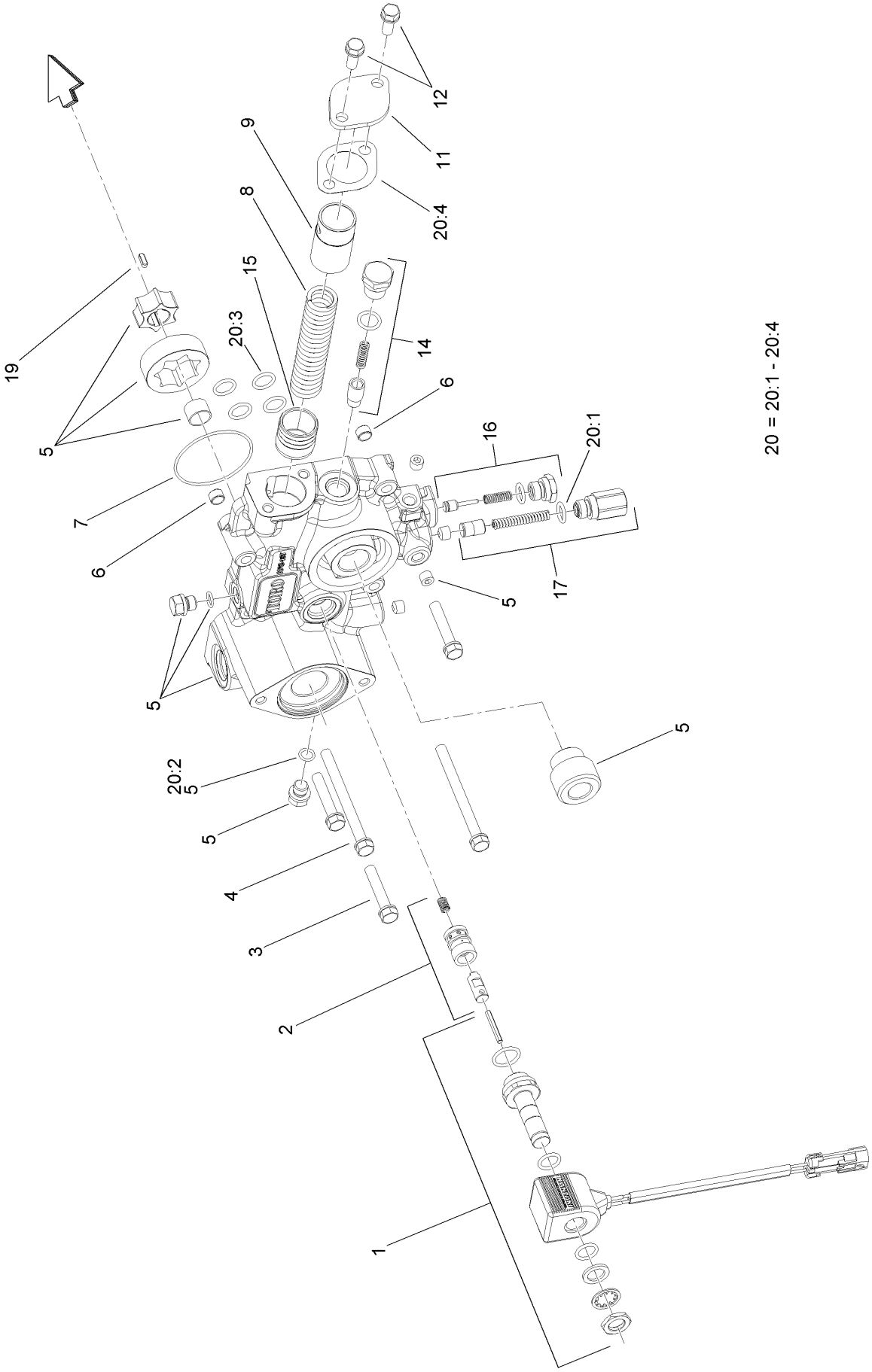

20 = 20:1 - 20:4

Charge Pump Housing Assembly
Transmission Assembly No. 131-5510 (continued)

Ref.	Part Number	Qty.	Description
1	107-0851	1	Solenoid ASM
2	107-0850	1	Solenoid Valve ASM
3	107-0863	3	Bolt
4	107-0864	2	Bolt
5	107-0840	1	Pump Body ASM
6	107-0848	2	Pin
7	107-0856	1	O-Ring
8	107-0845	1	Spring
9	107-0844	1	Collar
11	107-0846	1	Cover
12	93-0457	2	Bolt And Washer ASM

Ref.	Part Number	Qty.	Description
14	107-0843	1	Filter Bypass Valve ASM
15	107-0818	1	Piston
16	107-0842	1	Charge Relief Valve ASM
17	107-0841	1	Pressure Valve ASM
19	107-0865	1	Key
20	107-0855	1	Charge Pump Seal Kit
20:1	93-0418	2	O-Ring
20:2	107-0817	2	O Ring-Plug
20:3	104-3298	6	Packing
20:4	107-0847	1	Gasket

Center Section Assembly
Transmission Assembly No. 131-5510

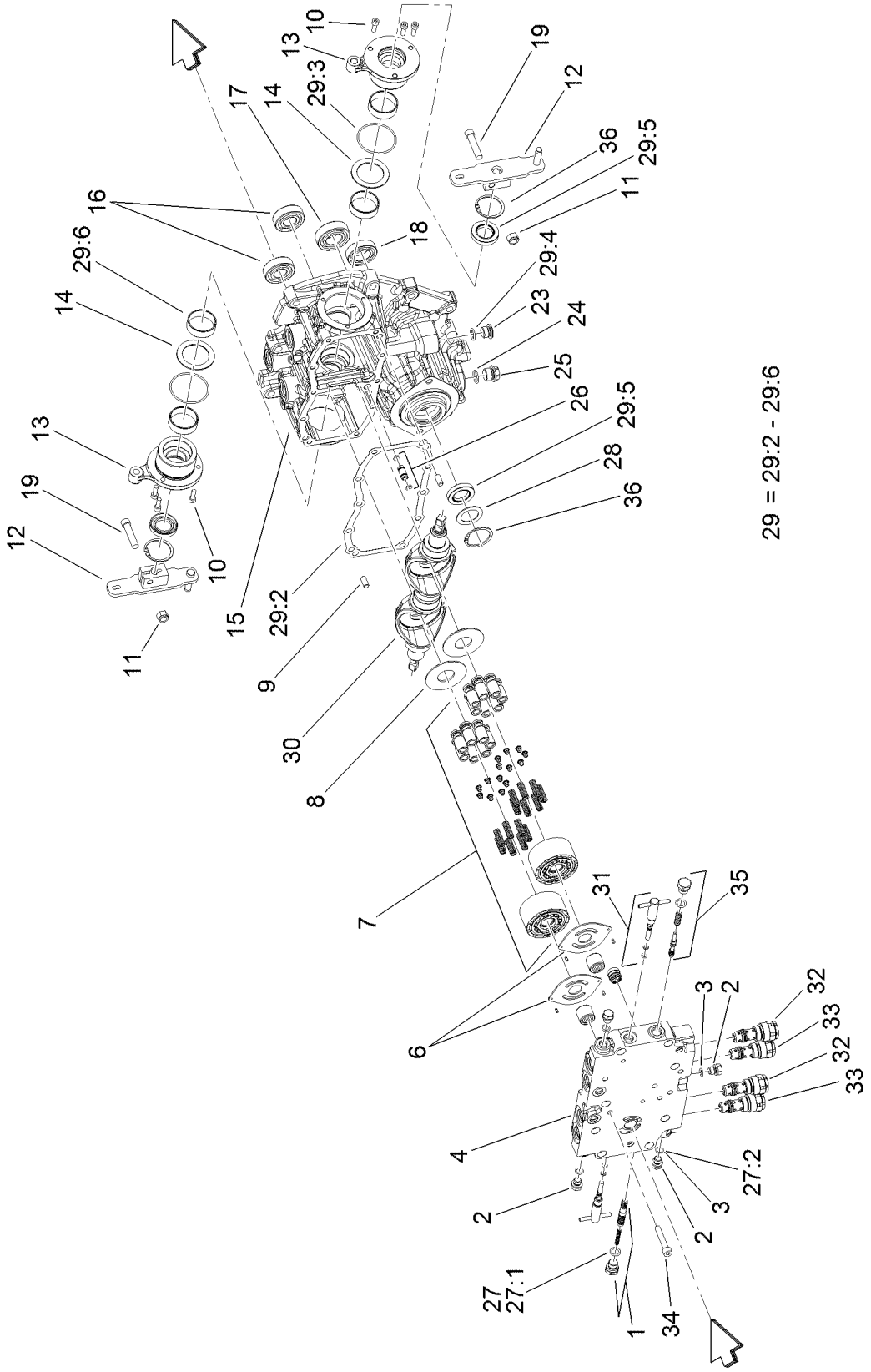

Center Section Assembly
Transmission Assembly No. 131-5510 (continued)

Ref.	Part Number	Qty.	Description
1	107-0807	1	Valve-Flushing, RH
2	107-0857	6	Plug
3	107-0817	6	O Ring-Plug
4	121-3377	1	Center Case, Complete
6	107-0805	2	Plate-Valve
7	107-0824	2	Cylinder Block ASM
8	107-0830	2	Plate-Thrust
9	92-0765	4	Pin-Parallel
10	107-0859	6	Bolt
11	120-6681	2	U-Nut
12	120-6680	2	Arm-Control
13	107-0832	2	Side Cover ASM
14	107-0829	2	Washer
15	120-5151	1	Pump Housing ASM
16	107-0826	2	Bearing
17	107-0821	1	Bearing
18	107-0838	1	Bearing
19	120-6682	2	Bolt
23	107-0861	1	Plug-NPTF
24	237-79	1	O-Ring
25	107-0867	1	Plug
26	107-0812	1	Pipe
27	107-0852	1	Center Case Seal Kit
27:1	93-0418	2	O-Ring
27:2	107-0817	6	O Ring-Plug
28	107-0813	1	Spacer
29	107-0853	1	Pump Housing Seal Kit
29:2	107-0810	1	Gasket-Case, Center
29:3	107-0817	2	O Ring-Plug
29:4	104-3298	1	Packing
29:5	107-0814	3	Seal
29:6	107-0825	4	Ring-Seal
30	120-6679	2	Plate-Swash
31	107-0808	2	Valve-Bypass
32	107-0804	2	Valve-Rear
33	107-0803	2	Valve-Front
34	107-0863	8	Bolt
35	107-0806	1	Valve-Flushing, LH
36	92-0757	2	Ring-Snap

Gear Case and Clutch Assembly
Transmission Assembly No. 131-5510

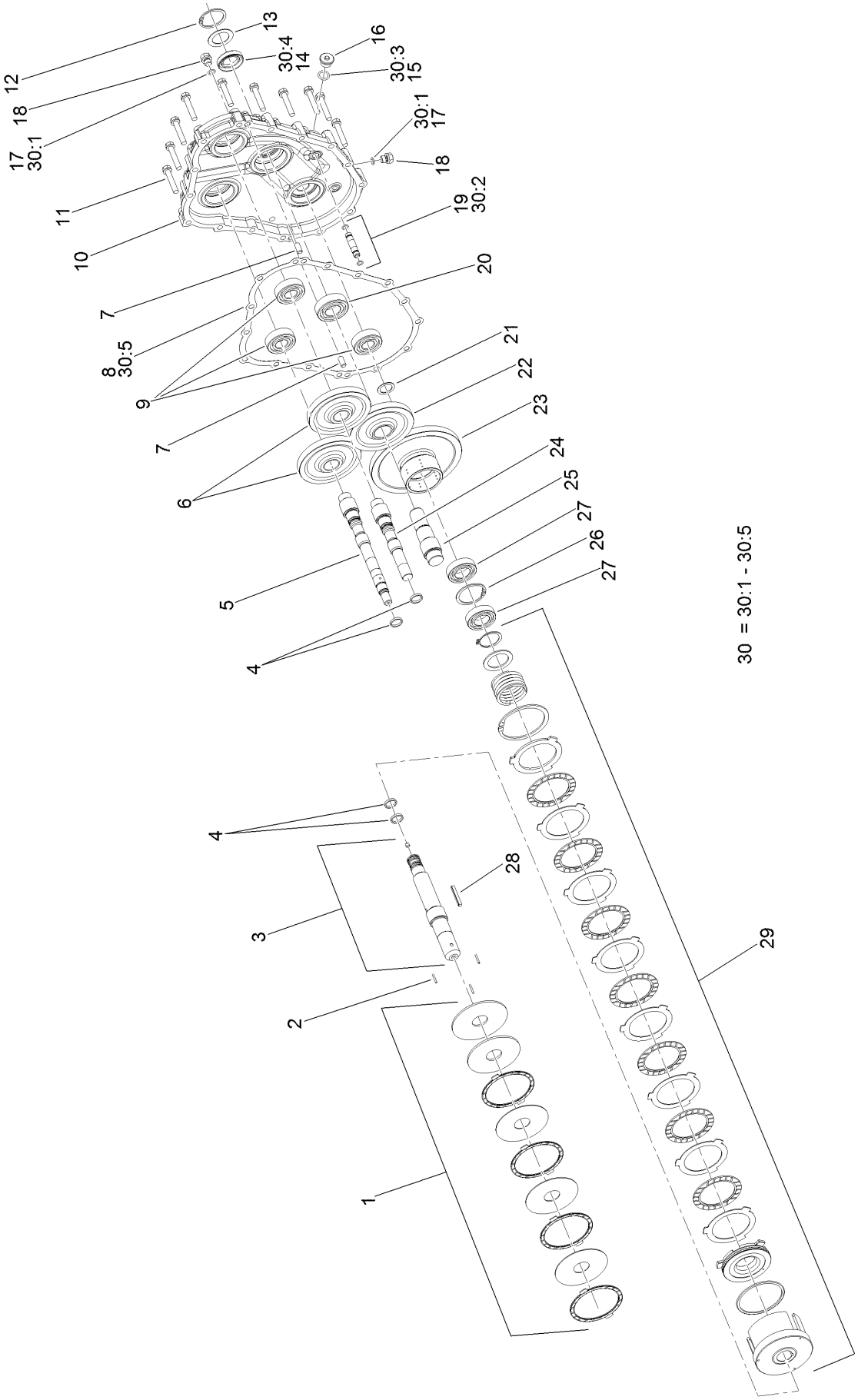

Gear Case and Clutch Assembly
Transmission Assembly No. 131-5510 (continued)

Ref.	Part Number	Qty.	Description
1	107-0839	1	PTO Brake ASM
2	107-0837	3	Rod-Push
3	107-0833	1	PTO Shaft ASM
4	107-0825	2	Ring-Seal
5	107-0827	1	Shaft-Pump
6	107-0823	2	Gear-Pump
7	92-0765	4	Pin-Parallel
8	107-0816	1	Gasket-Housing, Gear
9	107-0826	4	Bearing
10	120-5152	1	Housing-Case, Gear
11	107-0863	13	Bolt
12	92-0757	1	Ring-Snap
13	107-0813	1	Spacer
14	107-0814	1	Seal
15	104-3298	1	Packing
16	107-0861	1	Plug-NPTF
17	107-0817	6	O Ring-Plug
18	107-0857	6	Plug
19	107-0811	1	Pipe
20	107-0821	2	Bearing
21	107-0836	1	Spacer
22	107-0820	1	Gear-Input
23	107-0834	1	Gear-PTO
24	107-0822	1	Shaft-Pump
25	107-0819	1	Shaft-Input
26	92-0758	1	Ring-Snap
27	107-0838	3	Bearing
28	107-0866	1	Key
29	107-0835	1	Clutch Cylinder ASM
30	107-0854	1	Gear Housing Seal Kit
30:1	107-0817	2	O Ring-Plug
30:2		2	O-Ring ●
30:3	104-3298	1	Packing
30:4	107-0814	1	Seal
30:5	107-0816	1	Gasket-Housing, Gear

● Not serviced separately

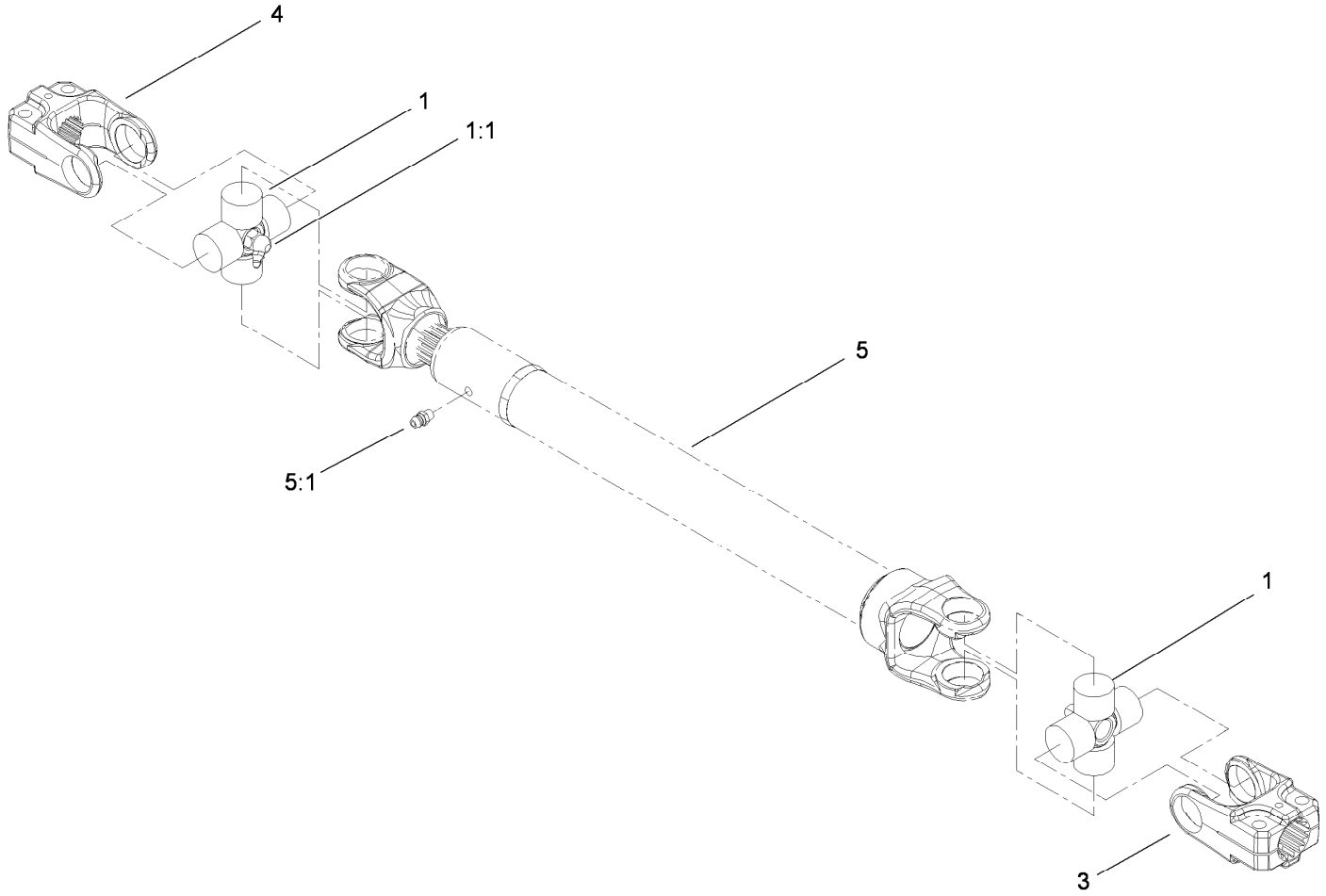

Driveshaft Assembly No. 110-3575

Ref.	*Part Number*	*Qty.*	*Description*
1	112-1687	2	Cross And Bearing Kit
1:1	62-3820	1	Fitting-Grease
3	54-9040	1	Yoke-End
4	54-9090	1	Yoke-End
5		1	Tube-Yoke, Slip ●
5:1	302-22	1	Fitting-Grease

● Not serviced separately

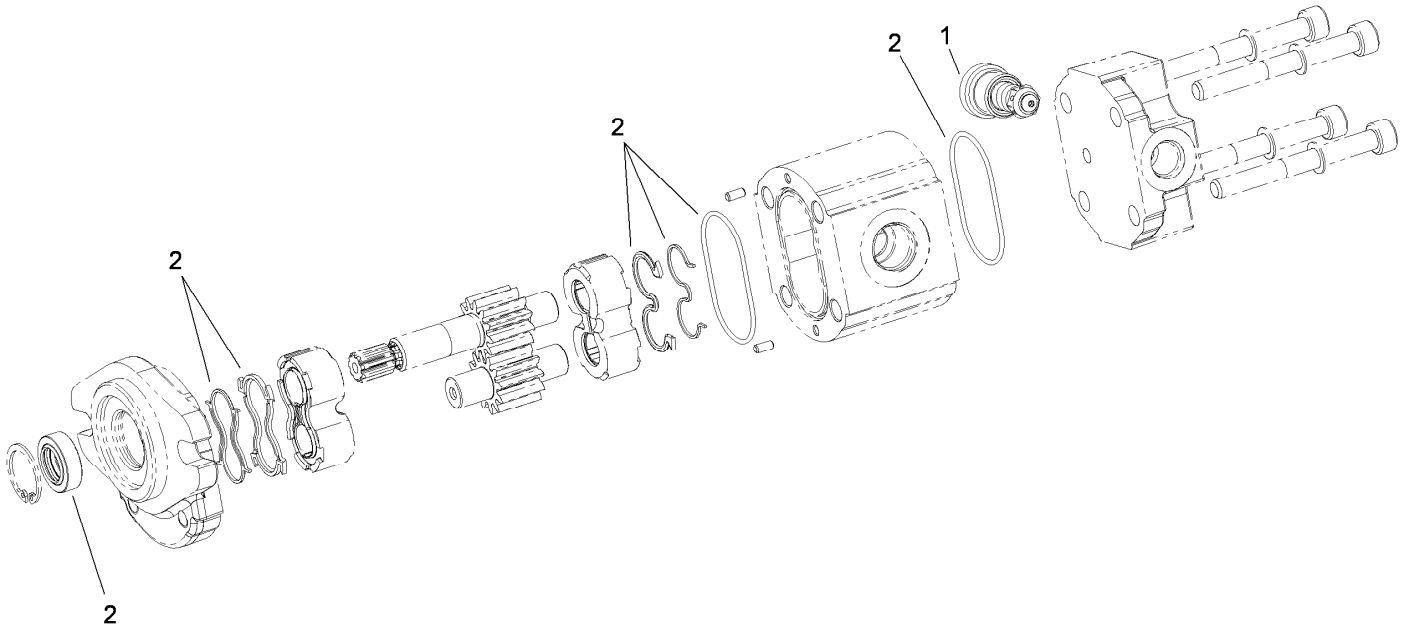

Hydraulic Gear Pump Assembly No. 112-9542

Ref.	*Part Number*	*Qty.*	*Description*
1	112-0198	1	Valve
2	112-0199	1	Seal Kit

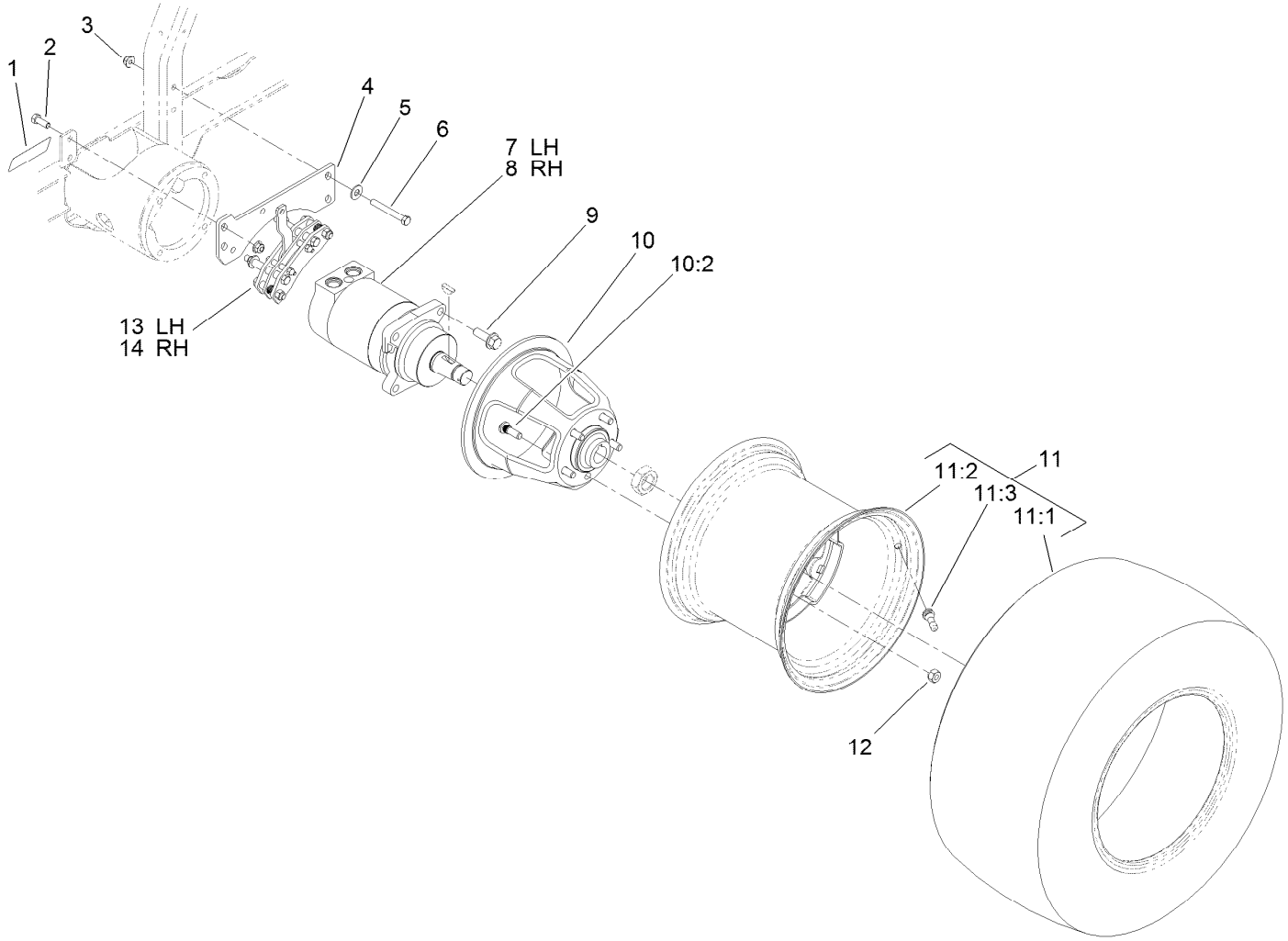

Rear Drive Assembly

Ref.	Part Number	Qty.	Description
1	106-9206	2	Decal-Torque, Wheel
2	323-6	4	Screw-HH
3	104-8301	8	Nut-HF, NI
4	112-9550-03	2	Bracket-Brake
5	3256-4	4	Washer-Flat
6	323-14	4	Screw-HH
7	108-5155	1	LH HYD Motor ASM
8	108-5230	1	RH HYD Motor ASM
9	100-6116	8	Screw-HHF

Ref.	Part Number	Qty.	Description
10	110-5535	2	Wheel Hub ASM
10:2	87-8730	5	Stud
11	106-7864	2	Tire And Wheel ASM
11:1	106-7868	1	Tire
11:2	87-6750	1	Wheel
11:3	232-27	1	Stem-Valve
12	23-7270	10	Nut-Lug
13	120-0013	1	LH Brake Caliper ASM
14	120-0014	1	RH Brake Caliper ASM

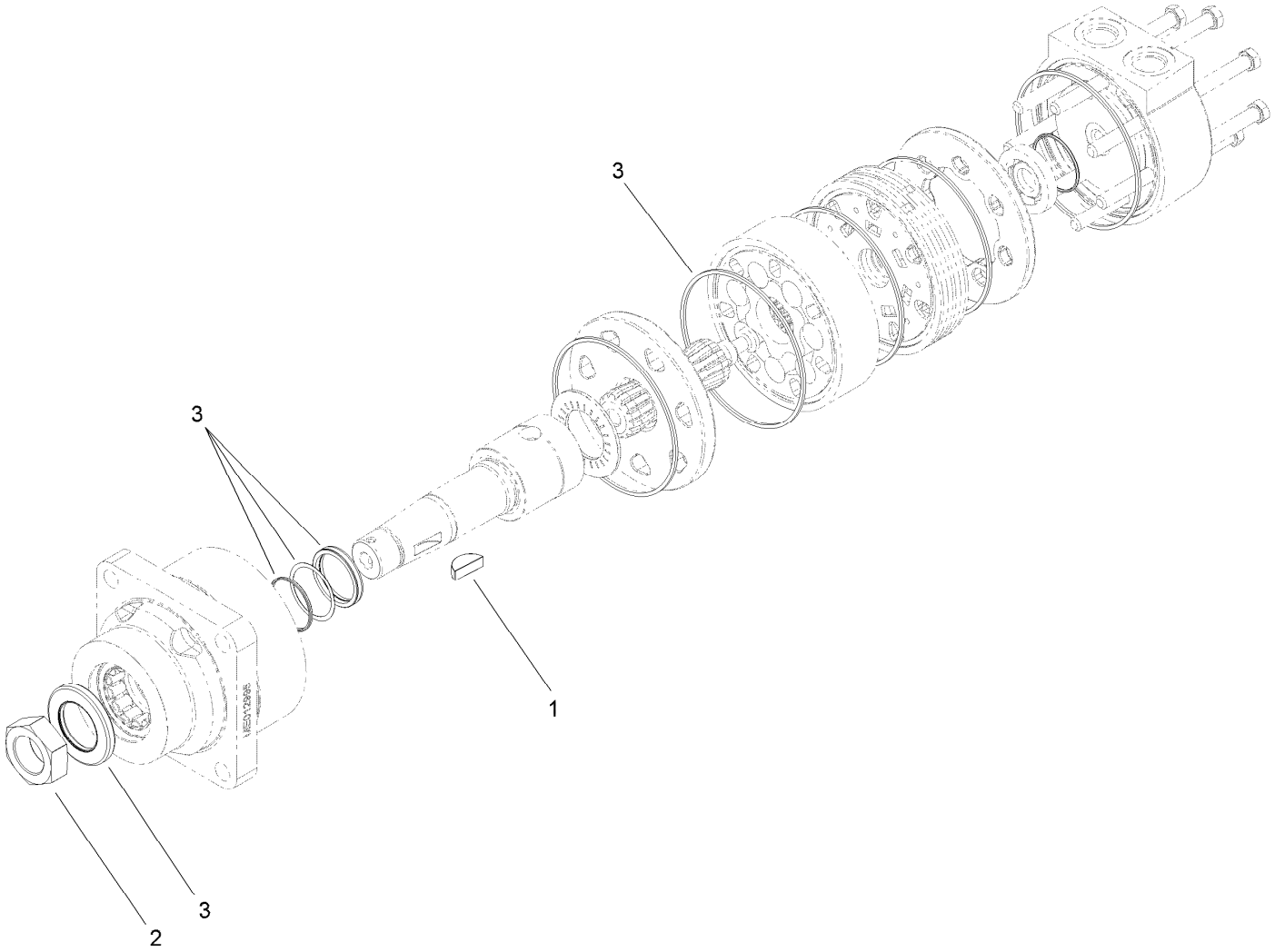

Hydraulic Motor Assembly No. 108-5155

Ref.	*Part Number*	*Qty.*	*Description*
1	3257-42	1	Key-Woodruff
2	107-9319	1	Nut-Hex
3	112-8405	1	Seal Kit

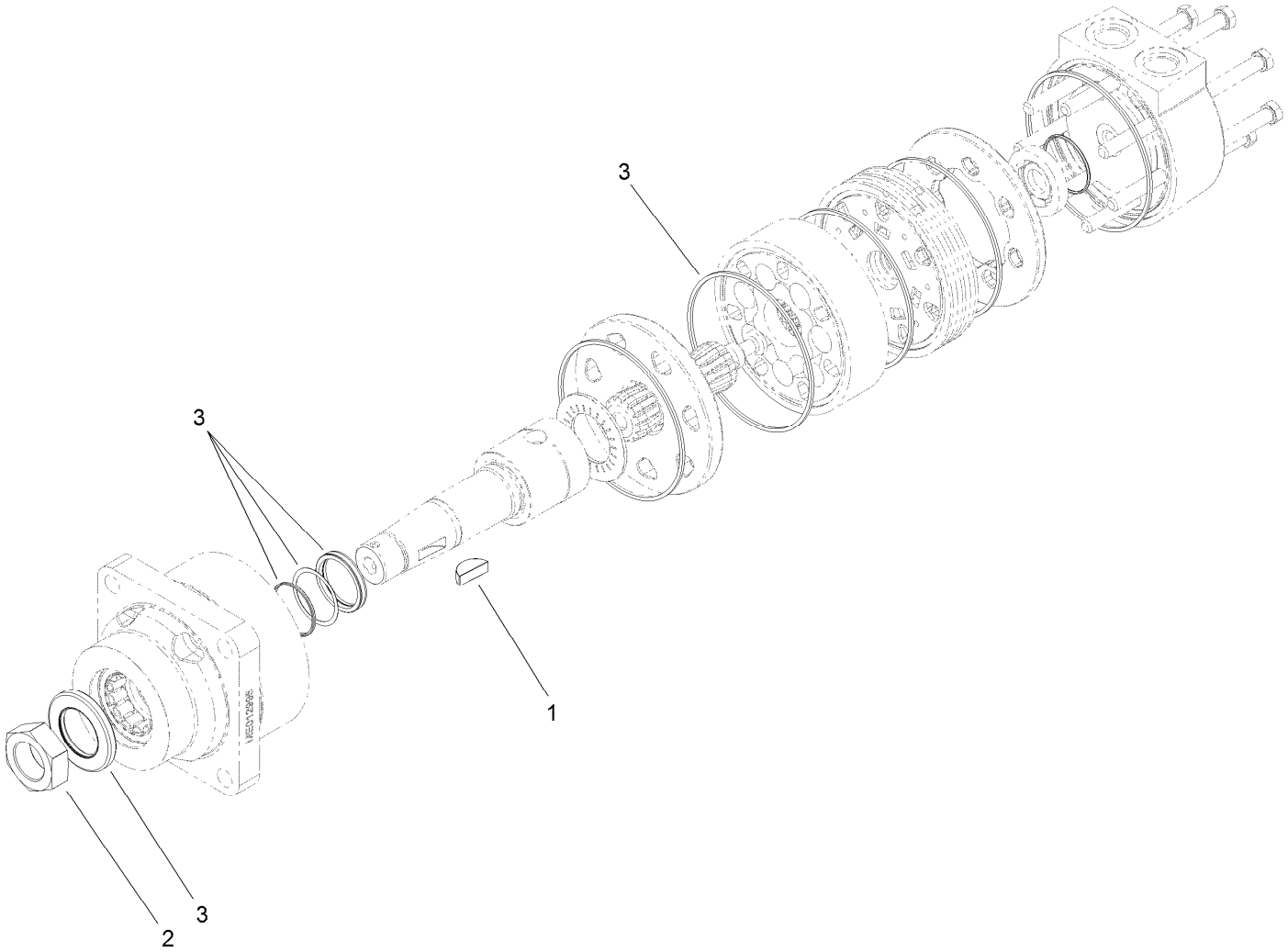

Hydraulic Motor Assembly No. 108-5230

Ref.	*Part Number*	*Qty.*	*Description*
1	3257-42	1	Key-Woodruff
2	107-9319	1	Nut-Hex
3	112-8405	1	Seal Kit

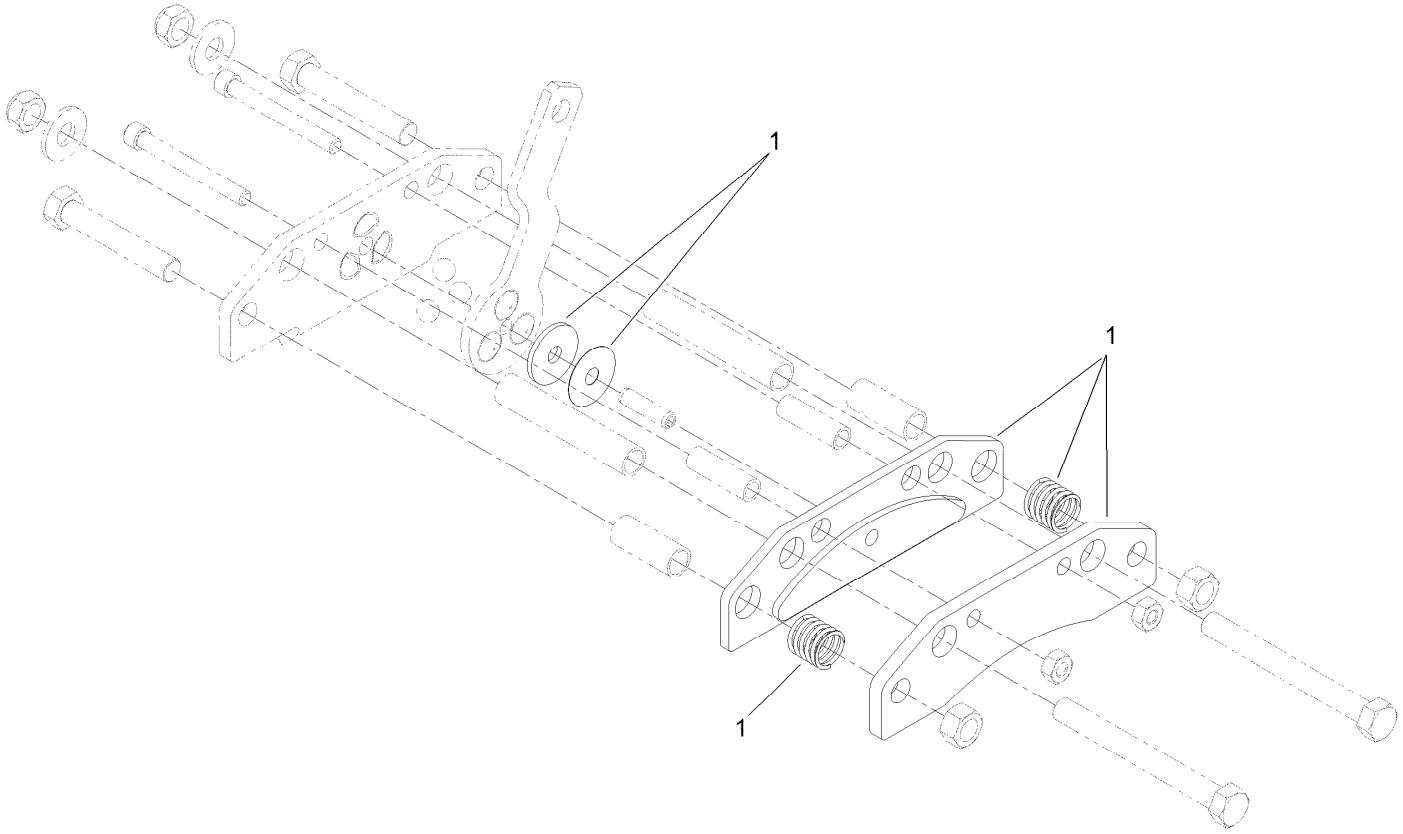

LH Brake Caliper Assembly No. 120-0013

Ref.	*Part Number*	*Qty.*	*Description*
1	120-0015	1	Replacement Brake Pad Service Kit

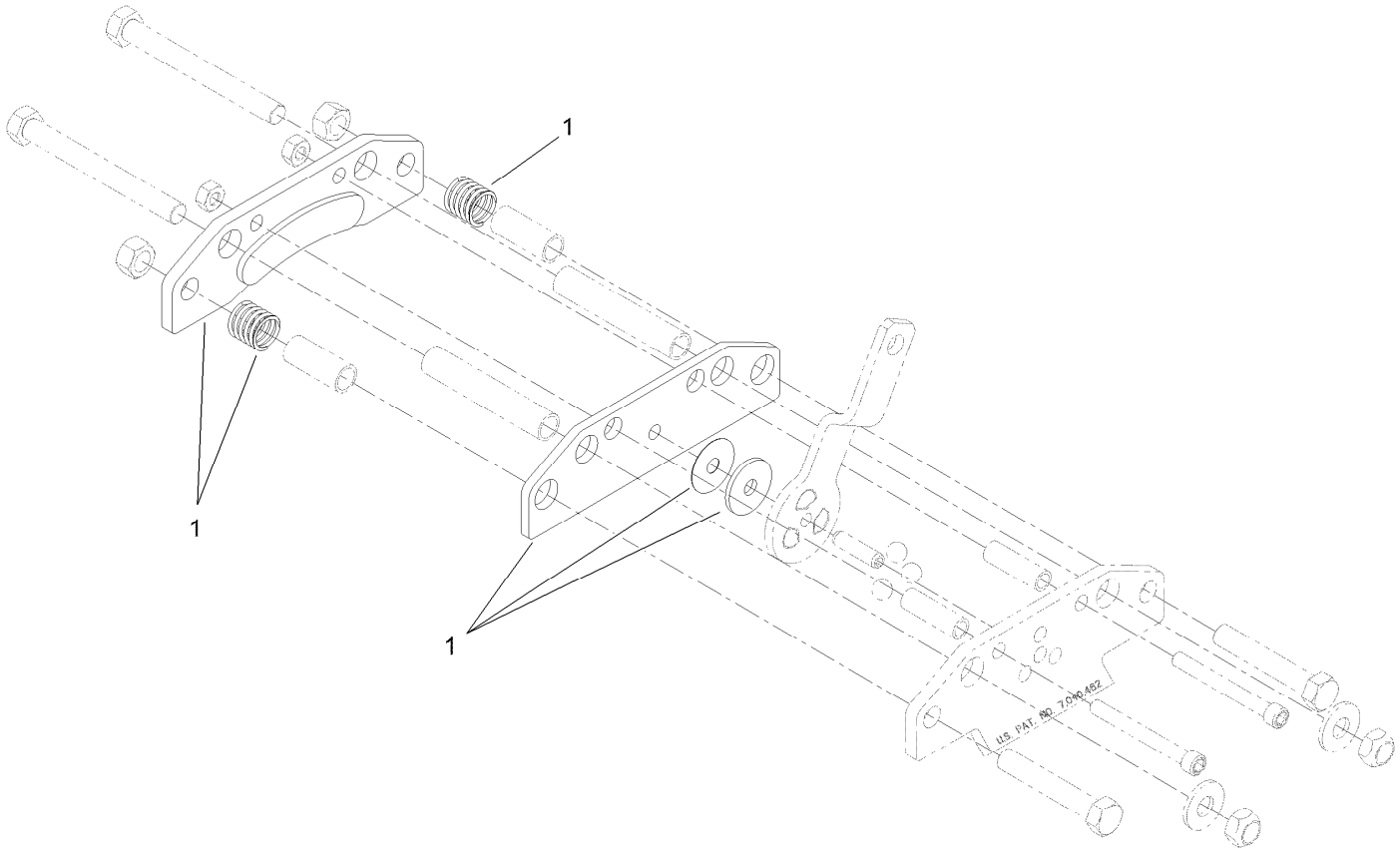

RH Brake Caliper Assembly No. 120-0014

Ref.	*Part Number*	*Qty.*	*Description*
1	120-0015	1	Replacement Brake Pad Service Kit

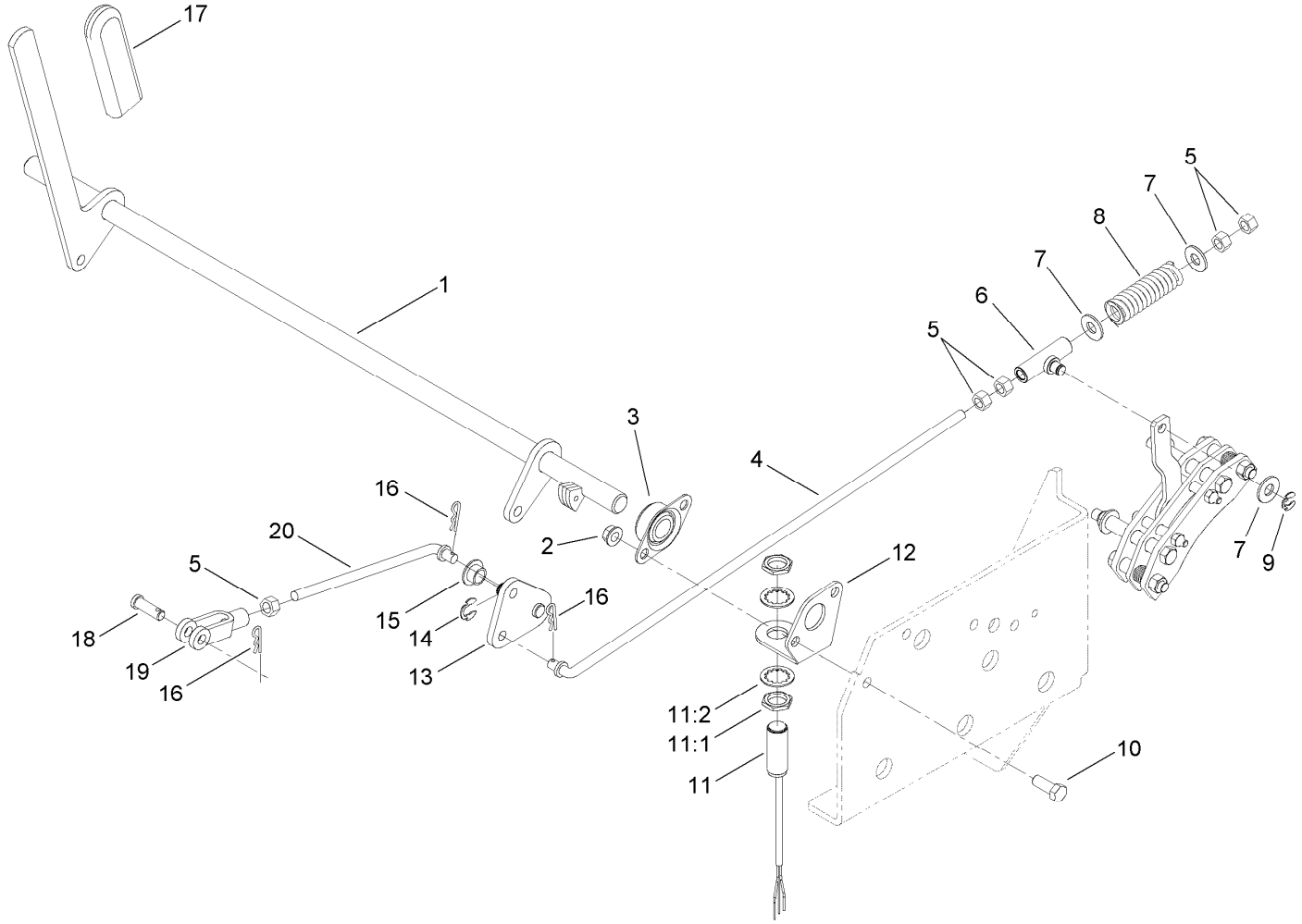

Brake Handle Assembly

Ref.	Part Number	Qty.	Description
1	117-5582-03	1	Handle-Brake
2	3290-357	4	Nut-HHF, Whiz
3	1-633102	2	Bearing-Flange, Side
4	120-0009	2	Rod-Brake
5	3219-3	10	Nut-Hex
6	132-8128	2	Swivel ASM
7	3256-4	6	Washer-Flat
8	109-2230	2	Spring-Compression
9	32151-47	2	Ring-Retaining
10	323-6	4	Screw-HH
11	115-5300	1	Proximity Switch ASM

Ref.	Part Number	Qty.	Description
11:1	117-3207	2	Nut-Hex
11:2	117-3208	2	Washer-Lock, Internal Tooth
12	117-5572	1	Bracket-Switch
13	120-0022	2	Pivot-Brake
14	32151-68	2	Ring-Retaining
15	1-513140	4	Bearing-Control
16	3290-307	6	Pin-Cotter
17	1-633268	1	Grip-Lever
18	1-808285	2	Pin-Clevis
19	1-633131	2	Yoke-Linkage, Brake
20	120-0023	2	Rod-Brake

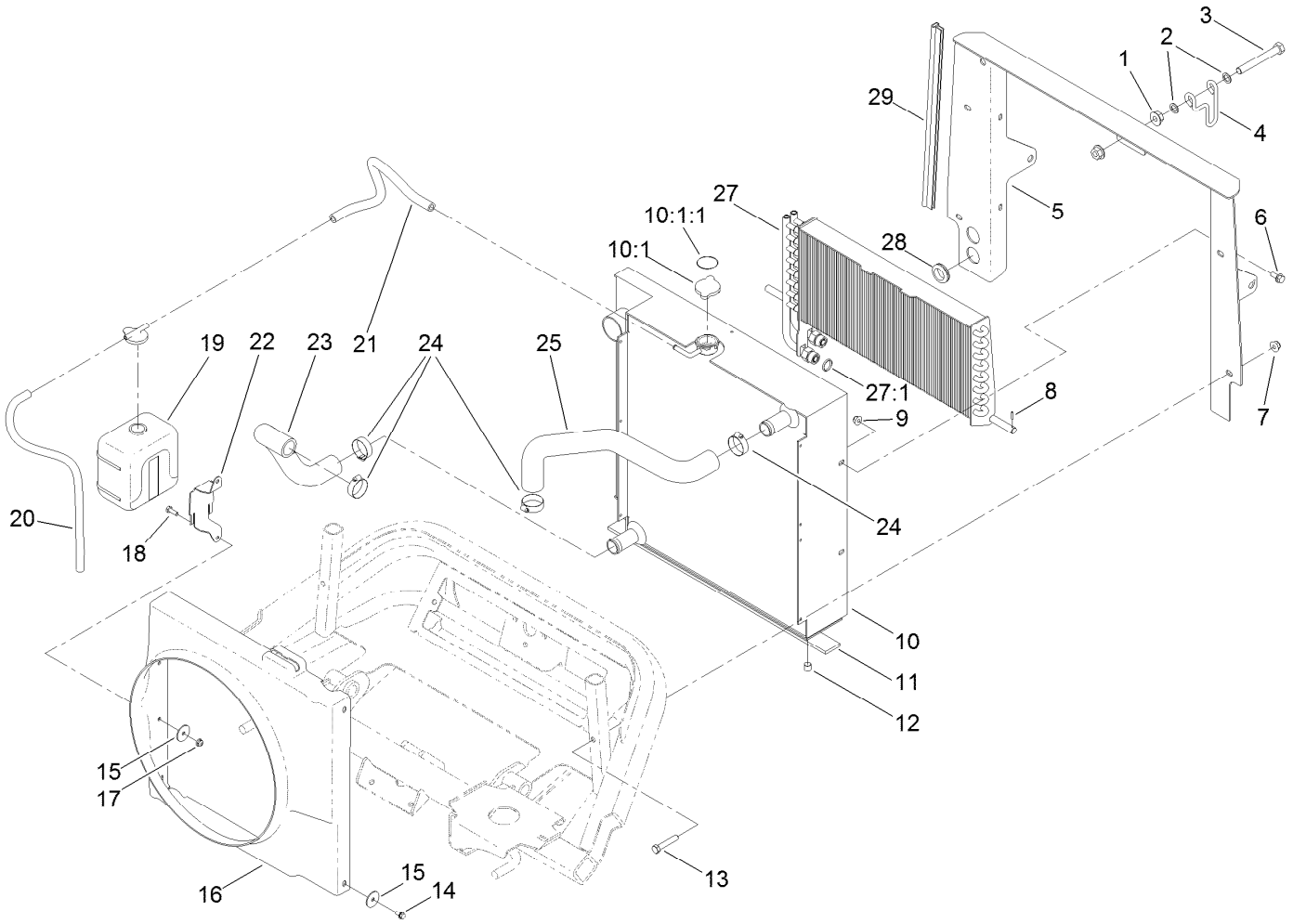

Radiator and Oil Cooler Assembly

Ref.	Part Number	Qty.	Description
1	32128-49	2	Nut-HHF
2	41-8440	2	Washer
3	325-17	1	Screw-HH
4	104-5429	1	Clamp-Form, Wire
5	110-8277-03	1	Frame-Radiator
6	3234-5	4	Screw-HHF
7	104-8301	4	Nut-HF, NI
8	32121-107	1	Pin-Roll
9	104-8300	4	Nut-HF, NI
10	117-5135	1	Radiator
10:1	115-7766	1	Cap-Radiator
10:1:1	106-6755	1	Decal-Cap, Radiator
11	108-9935	1	Strip-Foam
12	99-8551	1	Plug-Pipe
13	323-10	4	Screw-HH
14	32104-116	4	Screw-HWHTF
15	3256-55	6	Washer-Flat
16	117-9232	1	Shroud-Fan
17	104-7201	2	Nut-HF
18	321-4	2	Screw-HH
19	104-9318	1	Bottle-Overflow
20	110-6187	1	Hose-Fuel
21	109-0274	1	Hose-Fuel
22	108-9930-03	1	Bracket-Bottle
23	105-7283	1	Hose-Radiator, Lower
24	2412-34	4	Clamp-Hose
25	105-7282	1	Hose-Radiator, Upper
27	112-1684	1	Cooler-Oil
27:1	237-30	2	O-Ring
28	240-5	2	Grommet
29	107-2269	2	Seal-Bulb

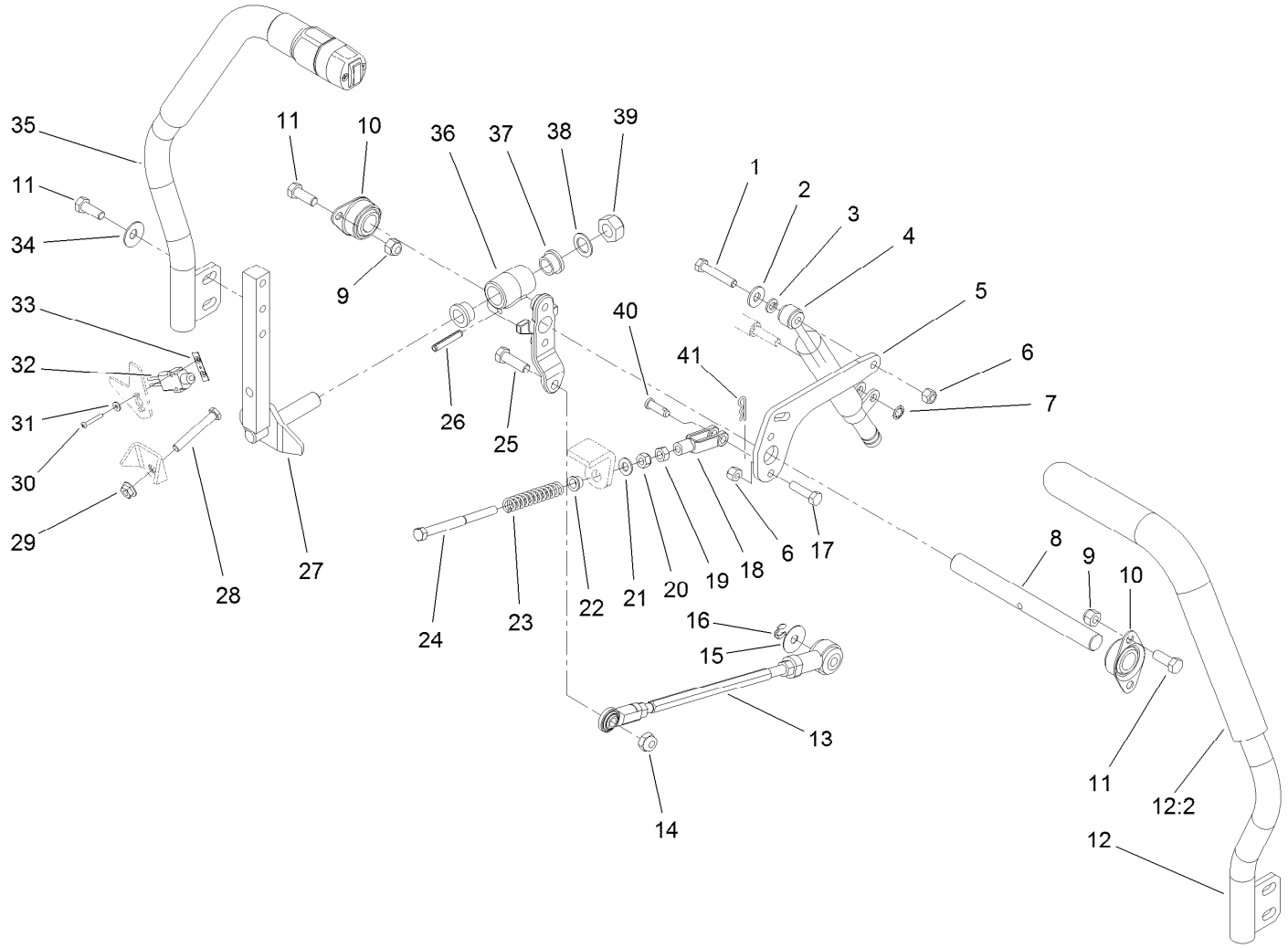

Traction Control Assembly

Ref.	Part Number	Qty.	Description
1	322-9	2	Screw-HH
2	3256-3	2	Washer-Flat
3	3253-4	4	Washer-Lock
4	138-8207	2	Damper
5	108-9829-03	2	Lever-Damper
6	3296-29	6	Nut-Lock, NI
7	32151-72	2	Ring-Retaining
8	108-9830	2	Shaft-Pivot
9	3296-39	8	Nut-Lock, NI
10	1-633102	4	Bearing-Flange, Side
11	323-6	12	Screw-HH
12	125-2688	1	LH Lever ASM
12:2	125-2704	1	Grip-Foam
13	112-5099	2	Link ASM
14	3296-44	2	Nut-Lock, NI
15	105-6814	2	Washer-Plain
16	32151-47	2	Ring-Retaining
17	322-6	4	Screw-HH
18	1-303105	2	Yoke-Adjustable
19	3219-2	2	Nut-Hex
20	3296-4	2	Nut-Lock

Ref.	Part Number	Qty.	Description
21	3256-23	2	Washer-Plain
22	1-603735	2	Bushing-Flanged
23	1-603807	2	Spring-Return, Neutral
24	1-603737	2	Bolt-Return, Neutral
25	323-7	2	Screw-HH
26	32121-15	2	Pin-Roll
27	108-9833-03	2	Lever
28	9114524	2	Bolt-TAP, HH
29	32128-26	2	Nut-Flange
30	3250-35	4	Screw-PPH
31	3256-53	4	Washer-Flat
32	99-3410	2	Switch
33	108-9824	2	Nut-Switch
34	3290-461	4	Washer-Spring
35	125-2687	1	RH Lever ASM
36	108-9831	2	Hub-Control
37	105-3455	4	Bushing
38	105-3481	4	Washer-Thrust
39	32152-6	2	Nut-Lock, Cone
40	283-1	2	Pin-Clevis
41	3290-307	2	Pin-Cotter

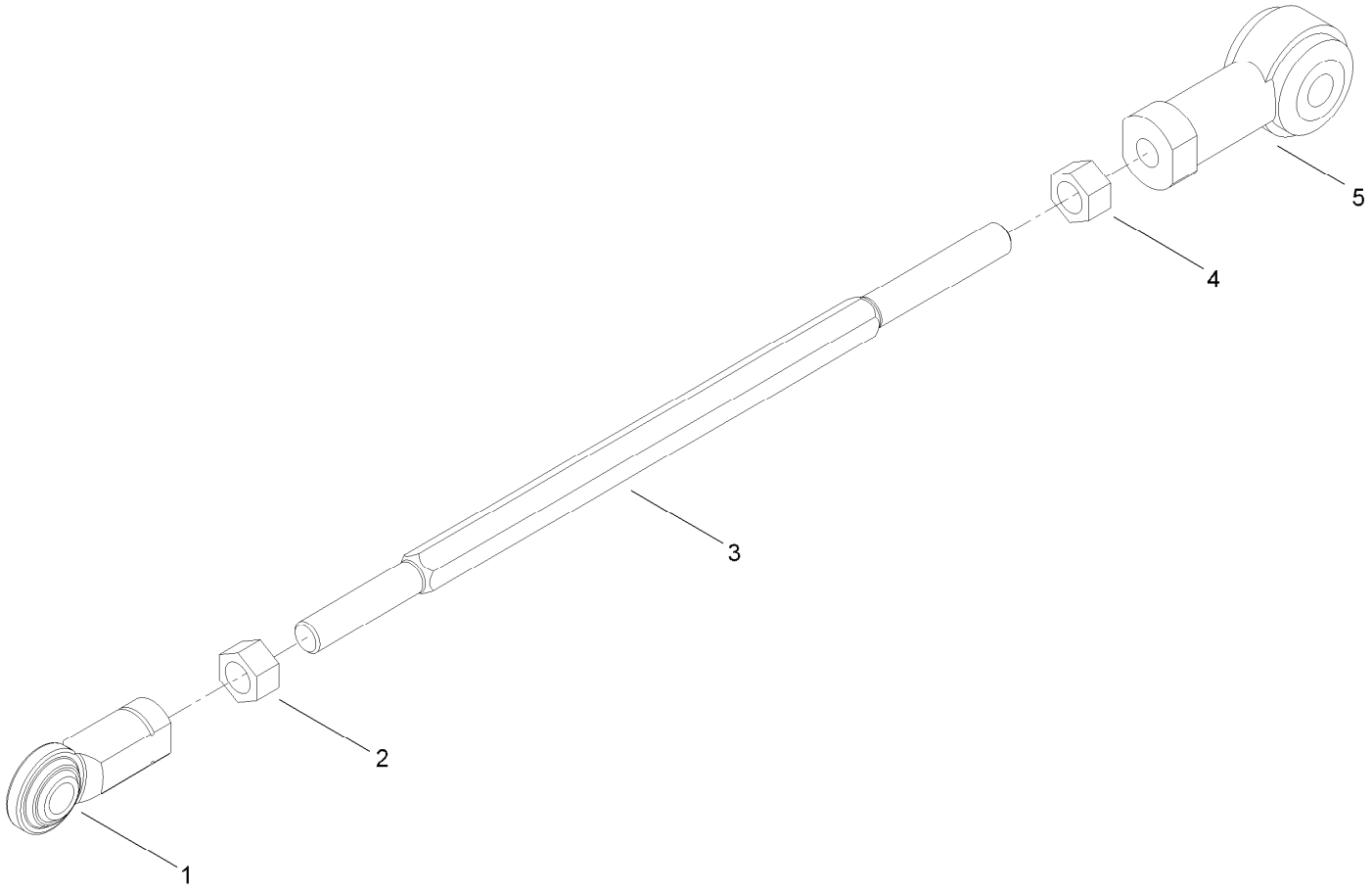

Link Assembly No. 112-5099

Ref.	*Part Number*	*Qty.*	*Description*
1	103-1167	1	Joint-Ball End, LH
2	3219-20	1	Nut-Hex, LH
3	105-7239	1	Rod-Threaded
4	3219-3	1	Nut-Hex
5	105-7199	1	End-Rod, Isolated

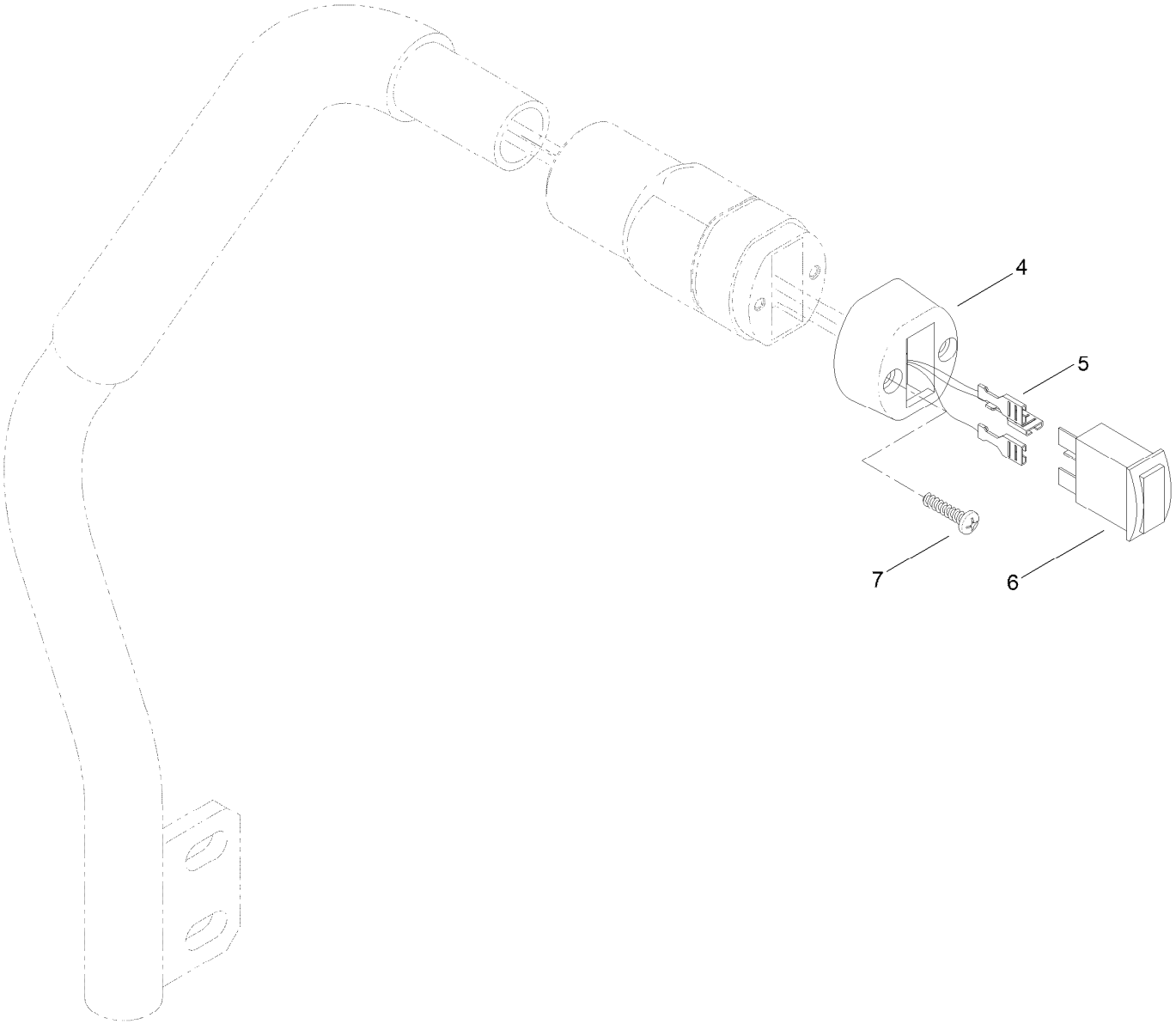

RH Lever Assembly No. 125-2687

Ref.	*Part Number*	*Qty.*	*Description*
4	121-3399	1	Cap-Switch
5	119-4382	1	Harness-Control Handle
6	125-2702	1	Switch, Spst (On)-Off-On
7	94-4496	2	Screw-PPH

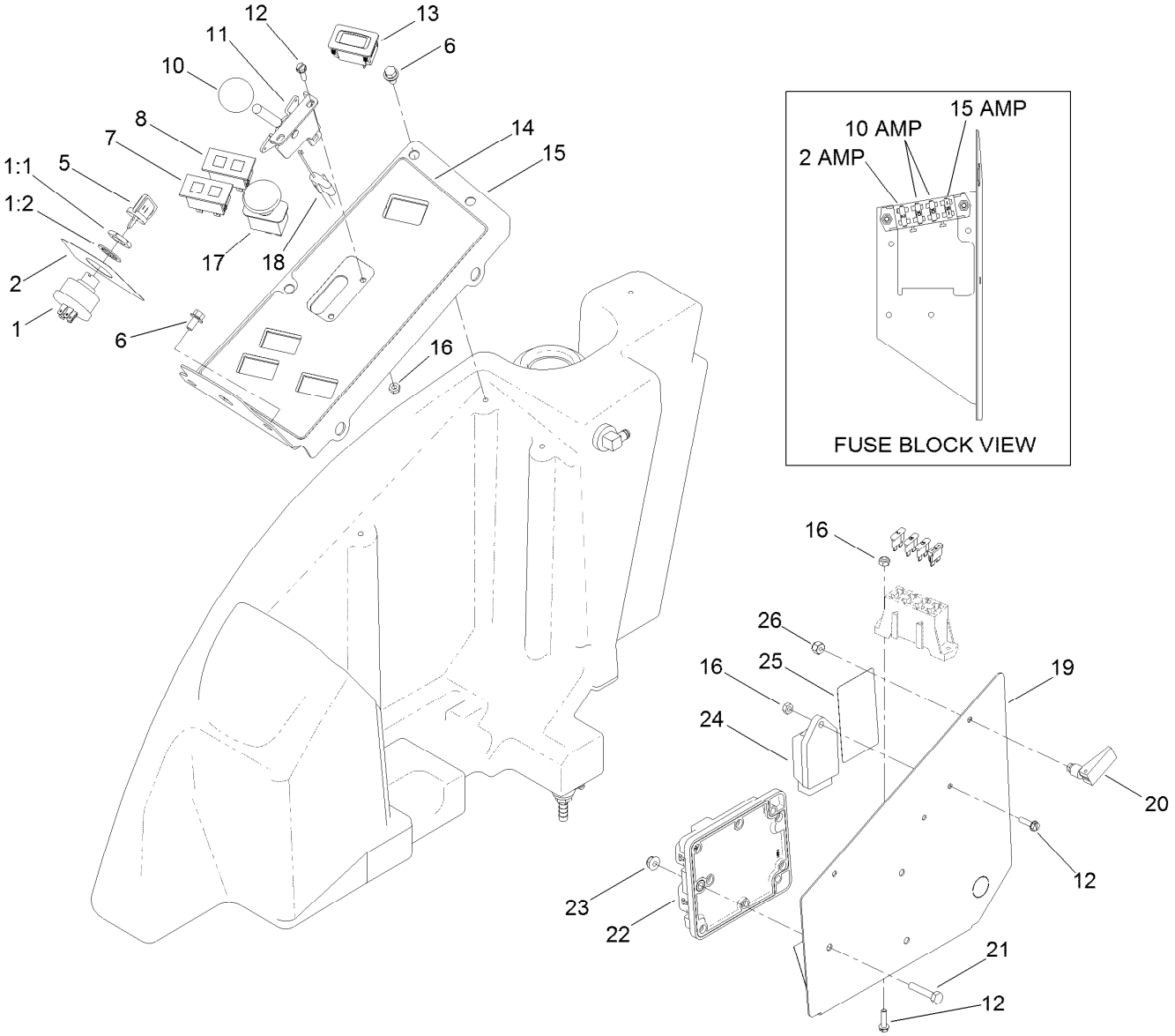

Control Panel Assembly

Ref.	Part Number	Qty.	Description
1	104-2541	1	Ignition Switch ASM
1:1	218-461	1	Nut-HH
1:2	3254-5	1	Washer-Lock
2	110-8254	1	Decal-Start, Control Panel
5	63-8360	2	Key-Ignition
6	3234-13	5	Screw-HHF
7	100-8071	1	Lamp-Warning
8	100-8070	1	Lamp-Warning
10	233-42	1	Knob
11	110-5547	1	Lever-Control
12	32105-13	5	Screw-HWH
13	120-2244	1	Hourmeter
14	110-8253	1	Decal-Panel, Control

Ref.	Part Number	Qty.	Description
15	138-8230-03	1	Panel-Control
16	3296-2	5	Nut-Lock, NI
17	93-9999	1	Switch-PTO
18	110-5548	1	Cable-Throttle
19	138-8231-03	1	Cover-Panel, Control
20	74-5950	2	Latch-Swell
21	321-13	3	Screw-HH
22	106-9277	1	Module-Control, Standard
23	104-7201	3	Nut-HF
24	107-9097	1	Controller-Glow
25	110-9796	1	Decal-Block, Fuse
26	1-804254	2	Nut-Lock, HH

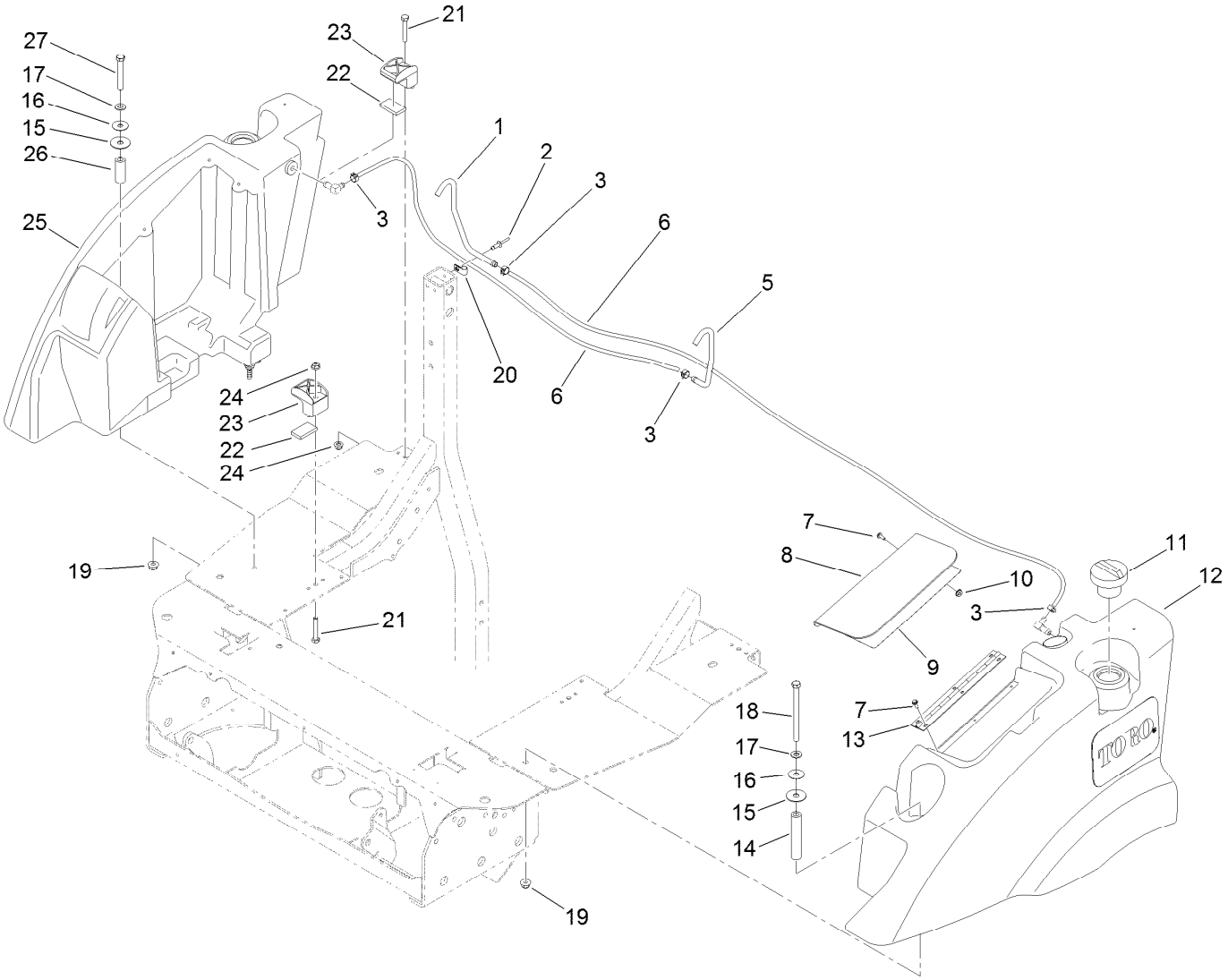

Left-Hand and Right-Hand Fuel Tank Assembly

Ref.	Part Number	Qty.	Description
1	110-8260	1	Tube-Vent, RH
2	3290-412	2	Rivet-Blind
3	92-2379	4	Clamp-Hose
5	110-8261	1	Tube-Vent, LH
6	109-0309	2	Hose-Fuel
7	112-6349	6	Screw-HWH
8	110-5540-03	1	Cover-Toolbox
9	110-8252	1	Decal-Instructions, Service
10	32149-8	3	Nut-Keps
11	115-5305	2	Cap-Fuel
12	110-8230	1	LH Fuel Tank ASM
13	108-2024	1	Hinge
14	110-5539	1	Spacer
15	95-1905	2	Washer-Rubber
16	105-6814	2	Washer-Plain
17	3256-24	2	Washer-Flat
18	323-39	1	Screw-HH
19	104-8301	2	Nut-HF, NI
20	2412-89	2	Clamp-R
21	322-10	4	Screw-HH
22	112-9561	4	Pad-Foam
23	107-4543	4	Clamp
24	104-8300	4	Nut-HF, NI
25	110-8236	1	RH Fuel Tank ASM
26	92-1239	1	Spacer-Support
27	323-13	1	Screw-HH

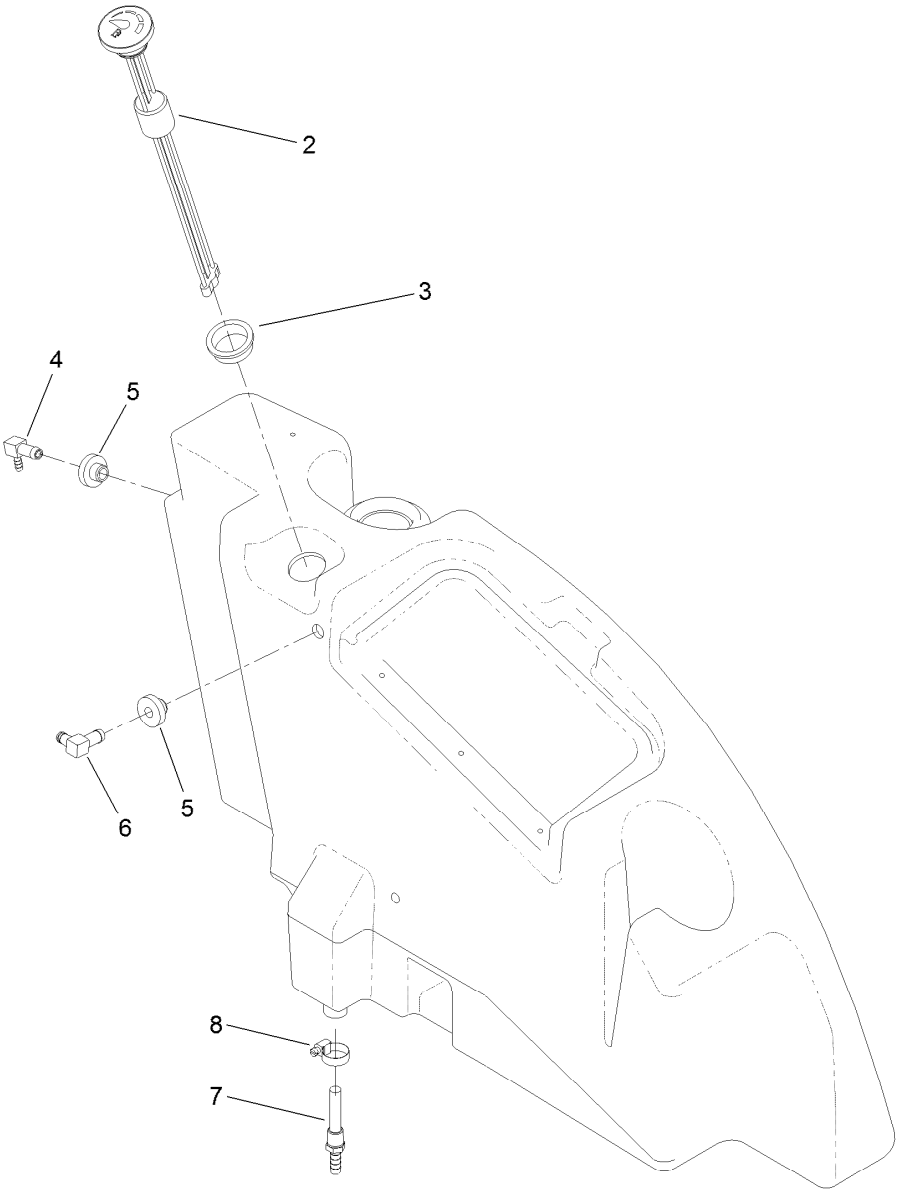

LH Fuel Tank Assembly No. 110-8230

Ref.	*Part Number*	*Qty.*	*Description*
2	110-8262	1	Gauge-Fuel
3	95-8972	1	Grommet
4	104-5228	1	Fitting-Elbow, 90 DEG
5	46-6560	2	Bushing
6	1-643259	1	Fitting-Elbow
7	112-6374	1	Fitting-Strainer
8	2412-36	1	Clamp-Hose

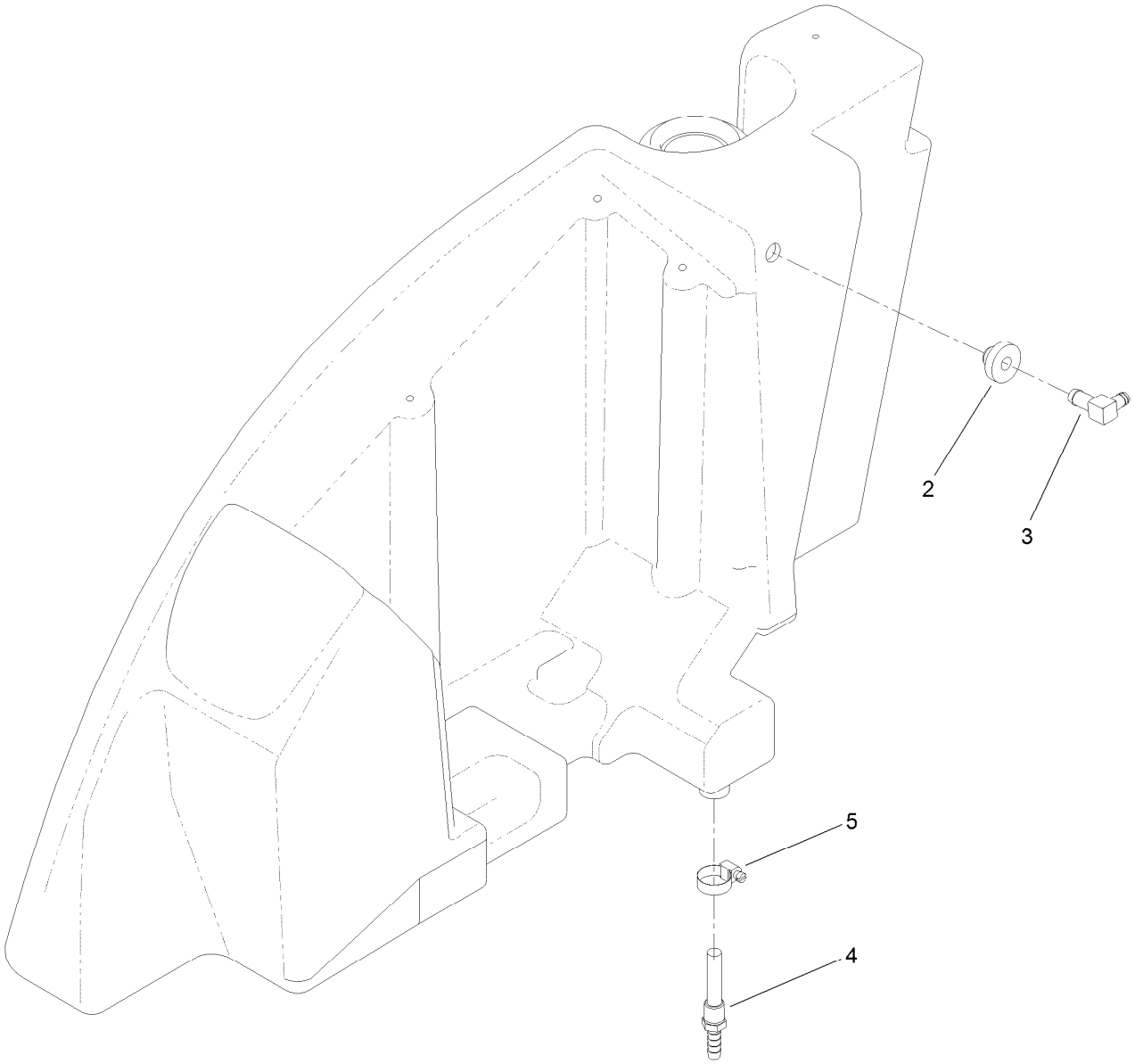

RH Fuel Tank Assembly No. 110-8236

Ref.	*Part Number*	*Qty.*	*Description*
2	46-6560	1	Bushing
3	1-643259	1	Fitting-Elbow
4	112-6374	1	Fitting-Strainer
5	2412-36	1	Clamp-Hose

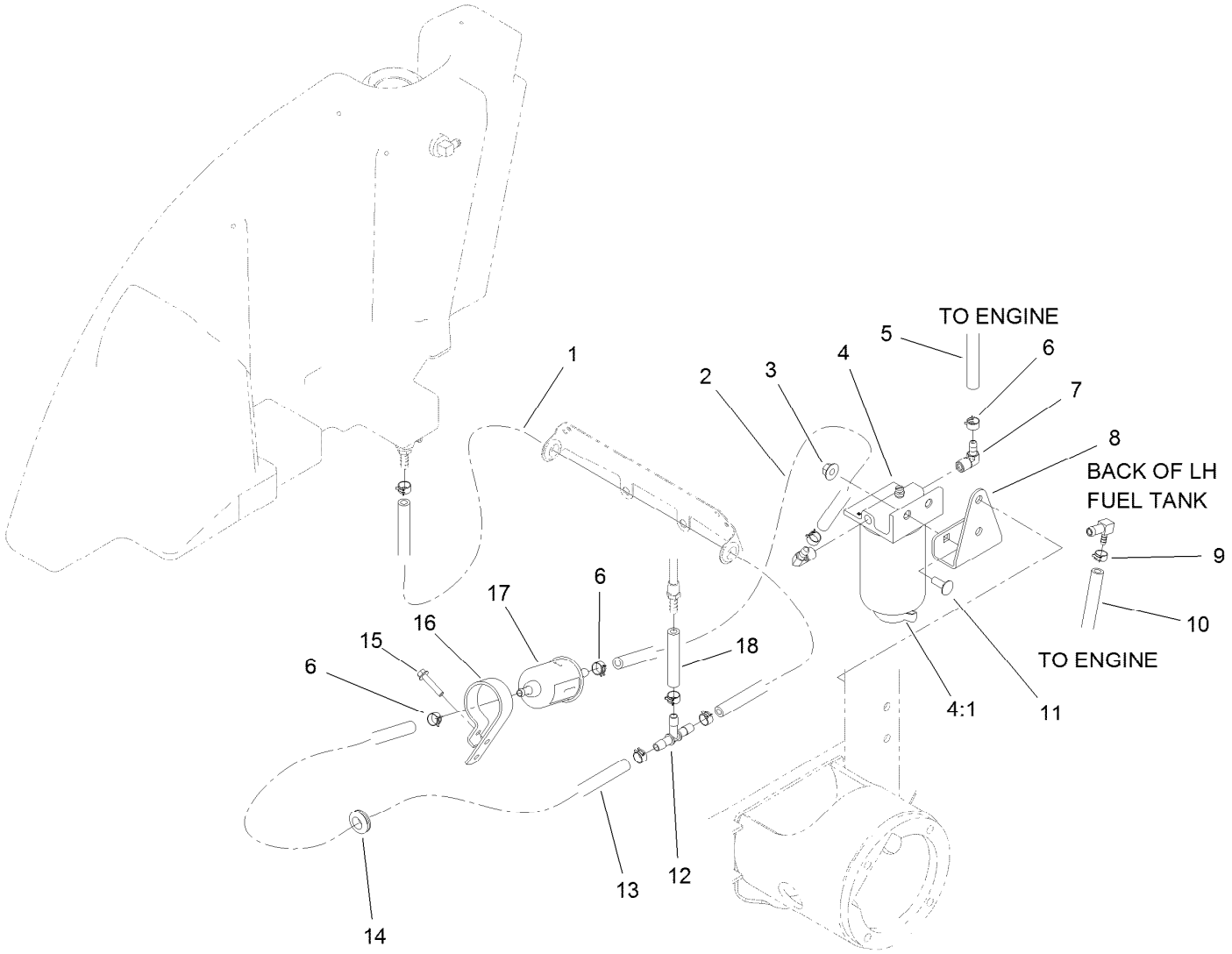

Fuel Filter / Separator Assembly

Ref.	Part Number	Qty.	Description
1	110-6186	1	Hose-Fuel
2	110-8752	1	Hose-Fuel
3	32128-44	2	Nut
4	110-9044	1	Separator-Filter
4:1	110-9049	1	Filter-Spin On
5	110-4104	1	Hose-Fuel
6	92-2379	10	Clamp-Hose
7	353-781	2	Fitting-HYD, 90
8	114-4058-03	1	Mount-Separator
9	2412-80	2	Clamp-Hose

Ref.	Part Number	Qty.	Description
10	110-8255	1	Hose-Fuel
11	3230-10	2	Bolt-CARR
12	354-107	1	Fitting-HYD, Tee
13	114-4028	1	Hose-Fuel
14	32180-030	1	Clip-Tie
15	32144-110	1	Screw-HWH
16	110-8817	1	Bracket-Pump, Fuel
17	110-8806	1	Pump-Fuel
18	112-6388	1	Hose-Fuel

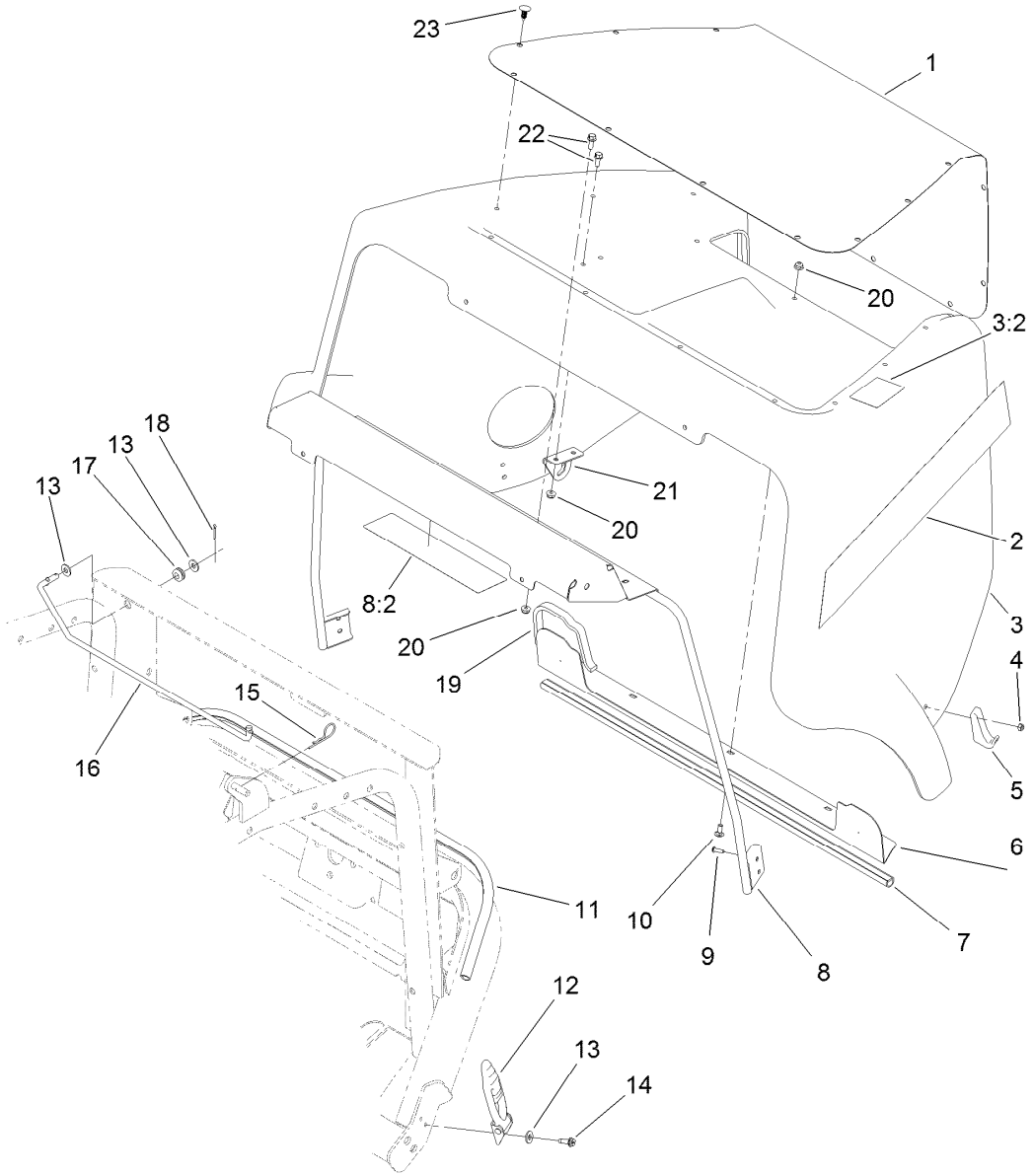

Hood and Screen Assembly

Ref.	Part Number	Qty.	Description
1	115-1446-03	1	Screen-Intake
2	110-5544	2	Decal-Hood
3	112-6311	1	Hood ASM
3:2	106-6754	1	Decal-Danger
4	3296-2	4	Nut-Lock, NI
5	103-2897	2	Latch-Catch
6	110-8285-03	1	Angle-Seal
7	110-8287	1	Bulb-Seal
8	110-9795	1	Support-Hood
8:2	110-9781	1	Decal-Danger
9	3274-39	4	Screw-HSBH
10	3229-11	3	Screw-CARR
11	112-1694	1	Seal-Bulb

Ref.	Part Number	Qty.	Description
12	103-2898	2	Latch-Rubber
13	3256-2	4	Washer-Flat
14	32104-95	2	Screw-HWH
15	3290-255	1	Pin-Cotter, Hair
16	110-8291	1	Rod-Prop, Hood
17	237-136	1	Grommet
18	3272-6	1	Pin-Cotter
19	110-8288	2	Seal-Foam
20	104-7201	11	Nut-HF
21	108-9811	1	Support-Rod, Prop
22	3234-33	8	Screw-HHF
23	117-2382	17	Plug-Plastic

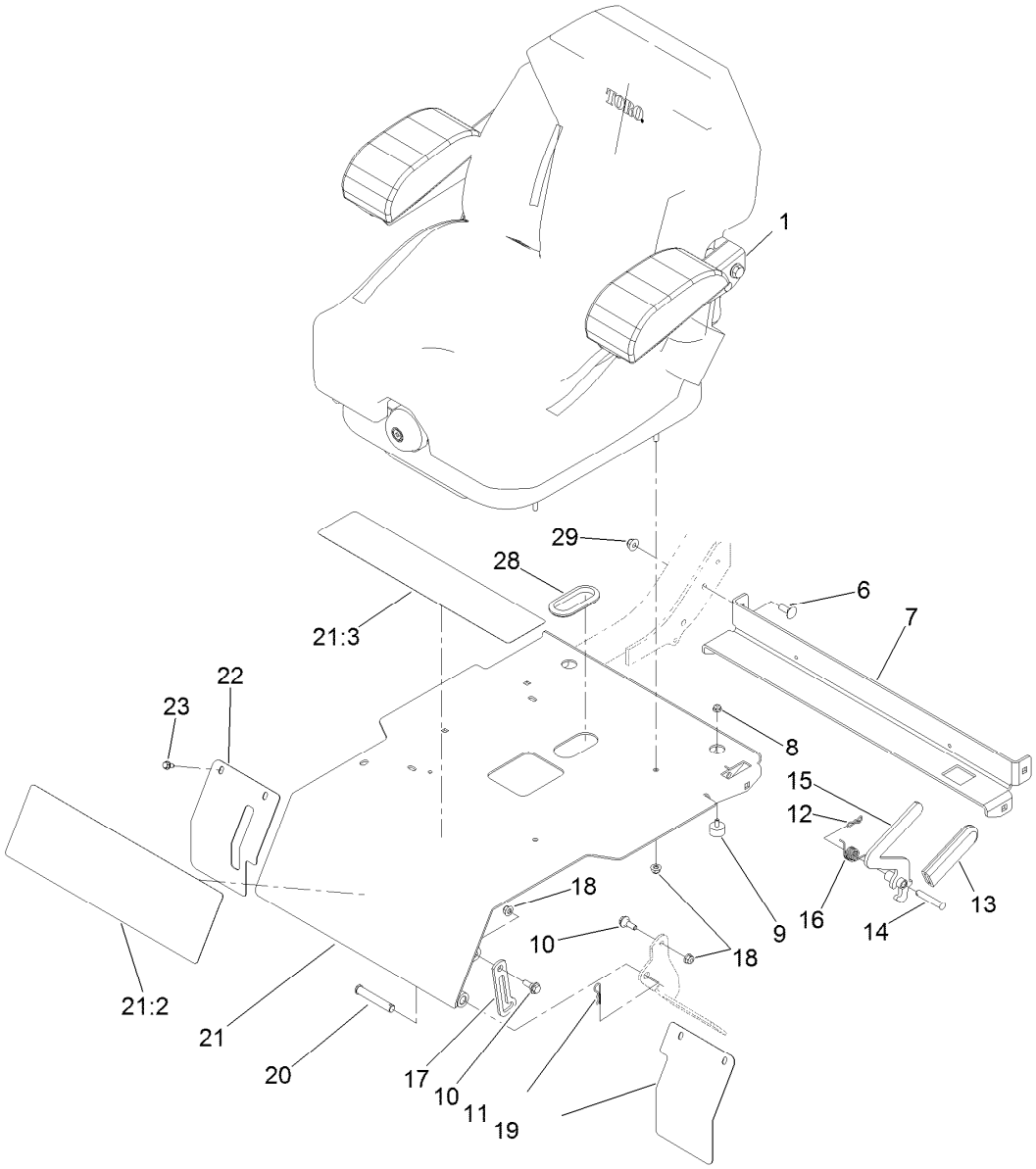

Seat and Seat Plate Assembly

Ref.	Part Number	Qty.	Description
1	125-3107	1	Suspension Seat ASM
6	3231-2	4	Bolt-CARR
7	120-0095-03	1	Support-Seat
8	104-7201	2	Nut-HF
9	240-14	2	Bumper-Rubber
10	116-2670	2	Screw-Shoulder
11	3290-467	2	Pin-Hair
12	119-1415	1	Pin-Cotter, Locking
13	1-633268	1	Grip-Lever
14	86-2130	1	Pin-Clevis
15	121-3390-03	1	Lever-Seat
16	121-3386	1	Spring-Torsion

Ref.	Part Number	Qty.	Description
17	130-8754	1	Prop-Seat
18	104-8300	6	Nut-HF, NI
19	130-8767-03	1	Cover-LH
20	283-55	2	Pin-Clevis
21	130-8749	1	Seat Plate ASM
21:2	120-9195	1	Decal-Safety
21:3	120-9196	1	Decal-Console, Top (CE)
22	130-8768-03	1	Cover-RH
23	32144-10	4	Screw-HWH
28	237-164	1	Grommet
29	104-8301	4	Nut-HF, NI

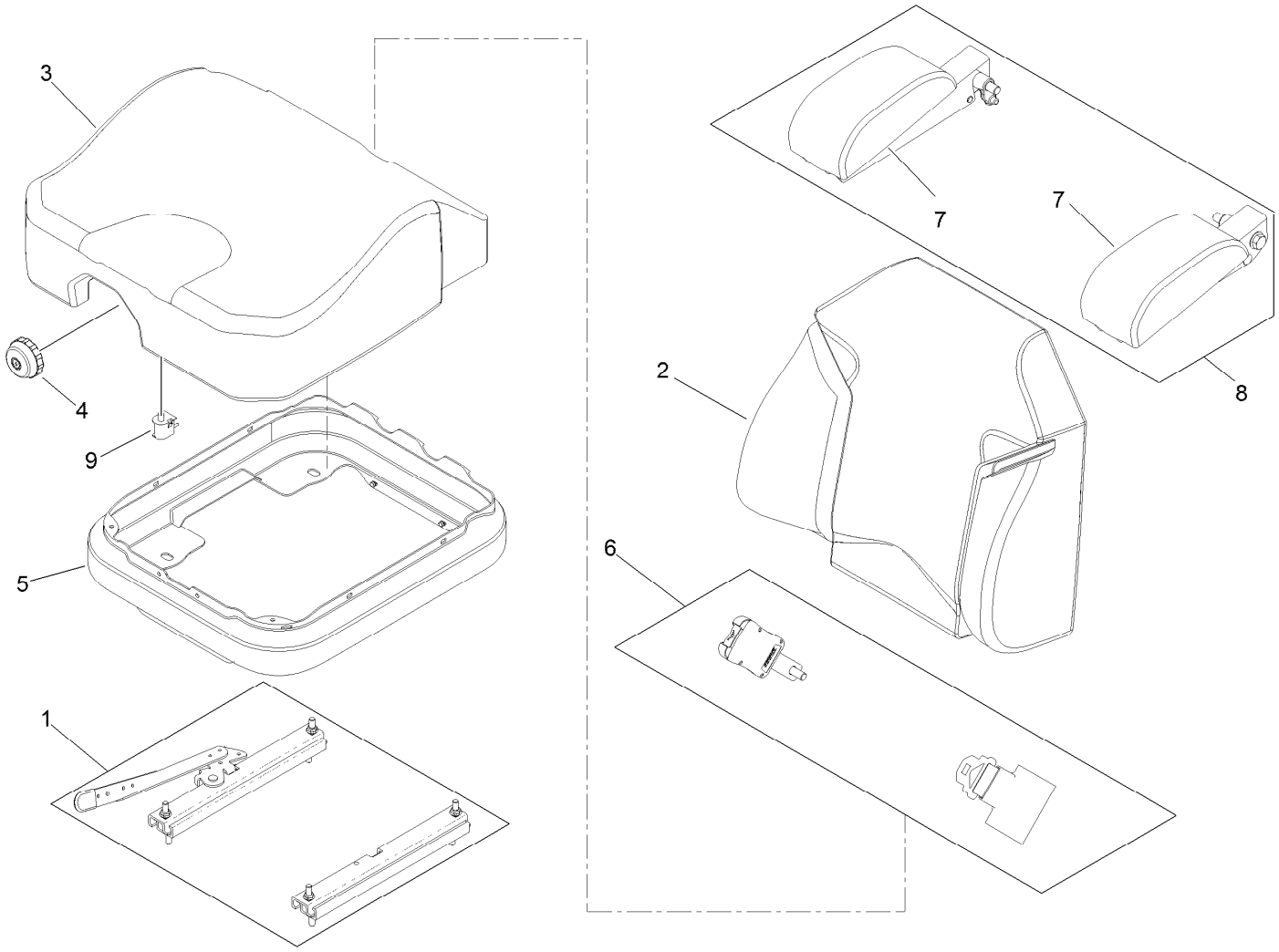

Seat Assembly No. 125-3107

Ref.	*Part Number*	*Qty.*	*Description*
1	116-8910	1	Seat Track Set
2	125-3112	1	Cover-Back
3	125-3111	1	Cover-Cushion
4	116-8911	1	Knob-Adjuster
5	116-5659	1	Cover-Suspension Bellows
6	126-2061	1	Seat Belt Service Kit
7	109-9802	1	Arm Rest Pad Set
8	109-9803	1	Arm Rest Set
9	82-2190	1	Switch-Bail

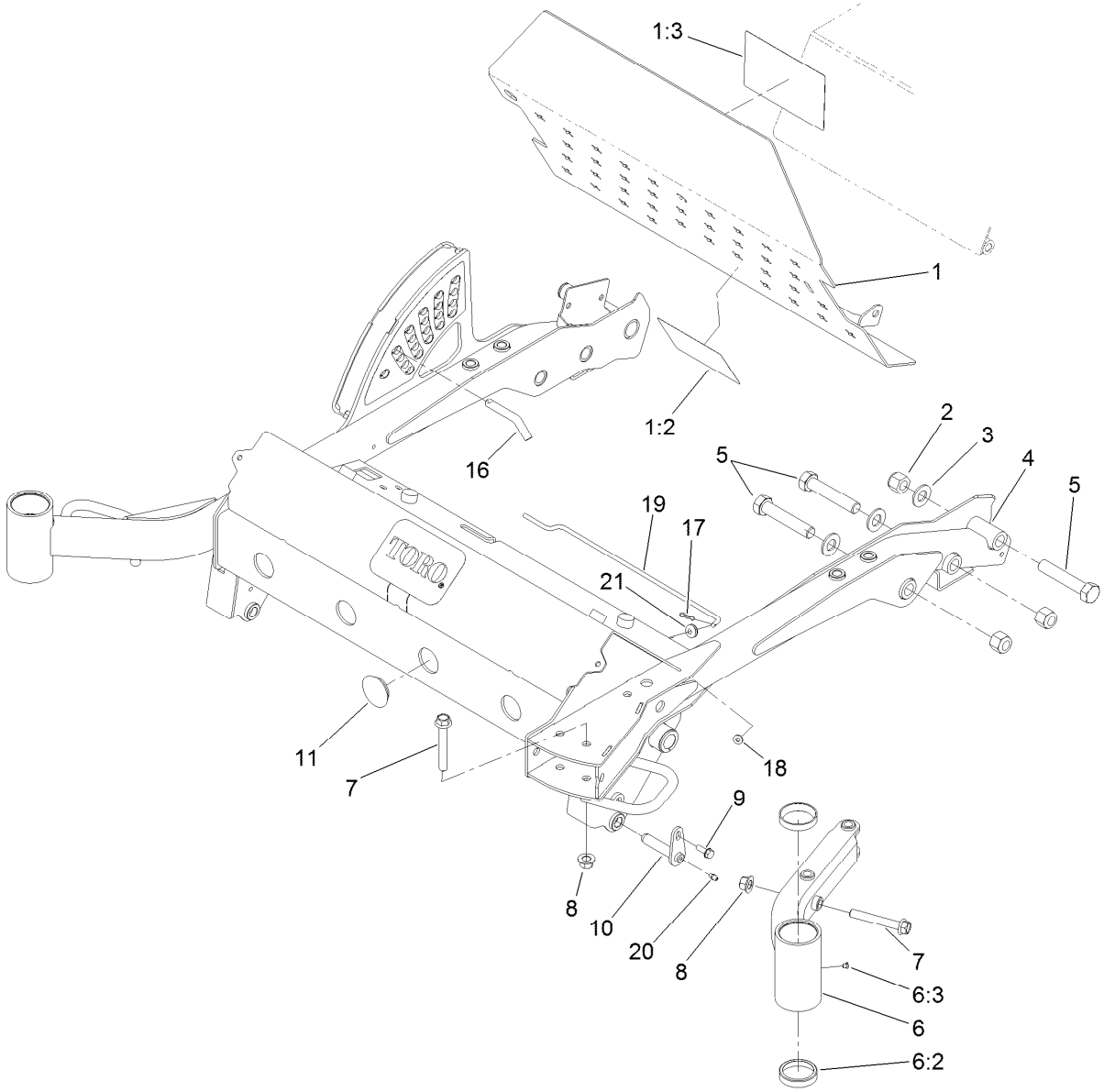

Floorplate and Carrier Frame Assembly

Ref.	Part Number	Qty.	Description
1	120-9165	1	Floorplate ASM
1:2	112-1461	1	Decal-Routing, Belt
1:3	107-1866	1	Decal-Danger, Slope
2	3296-51	5	Nut-Lock, NI
3	92-5836	5	Washer
4	136-4466	1	Carrier Frame ASM
5	328-7	5	Screw-HH
6	121-3340	1	Castor Arm ASM
6:2	254-107	2	Cup-Bearing, Tapered
6:3	1-811010	1	Plug
7	114-8419	3	Screw-HHF

Ref.	Part Number	Qty.	Description
8	99-5107	3	Nut-Lock
9	32144-41	2	Screw-Taptite
10	112-1602	2	Pin-Retainer
11	121-3397	4	Plug-Grommet
16	112-9544	1	Pin-HOC
17	119-1414	1	Pin-Cotter, Locking
18	3256-22	1	Washer-Flat
19	110-9847	1	Rod-Prop
20	302-5	2	Fitting-Grease
21	237-141	1	Grommet-Rubber

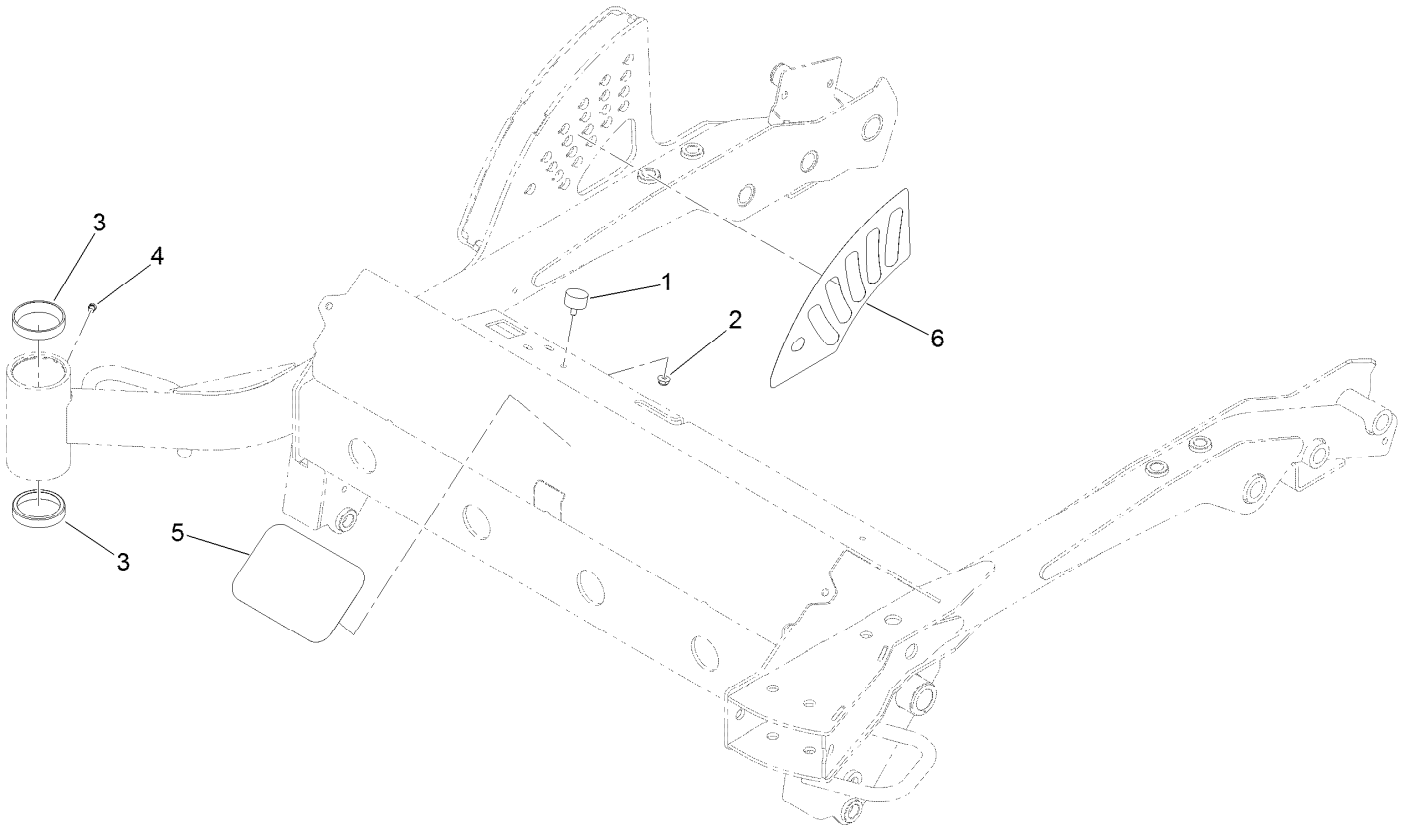

Carrier Frame Assembly No. 136-4466

Ref.	*Part Number*	*Qty.*	*Description*
1	240-14	4	Bumper-Rubber
2	104-7201	4	Nut-HF
3	254-107	2	Cup-Bearing, Tapered
4	1-811010	1	Plug
5	99-4693	1	Decal
6	127-6519	1	Decal-HOC

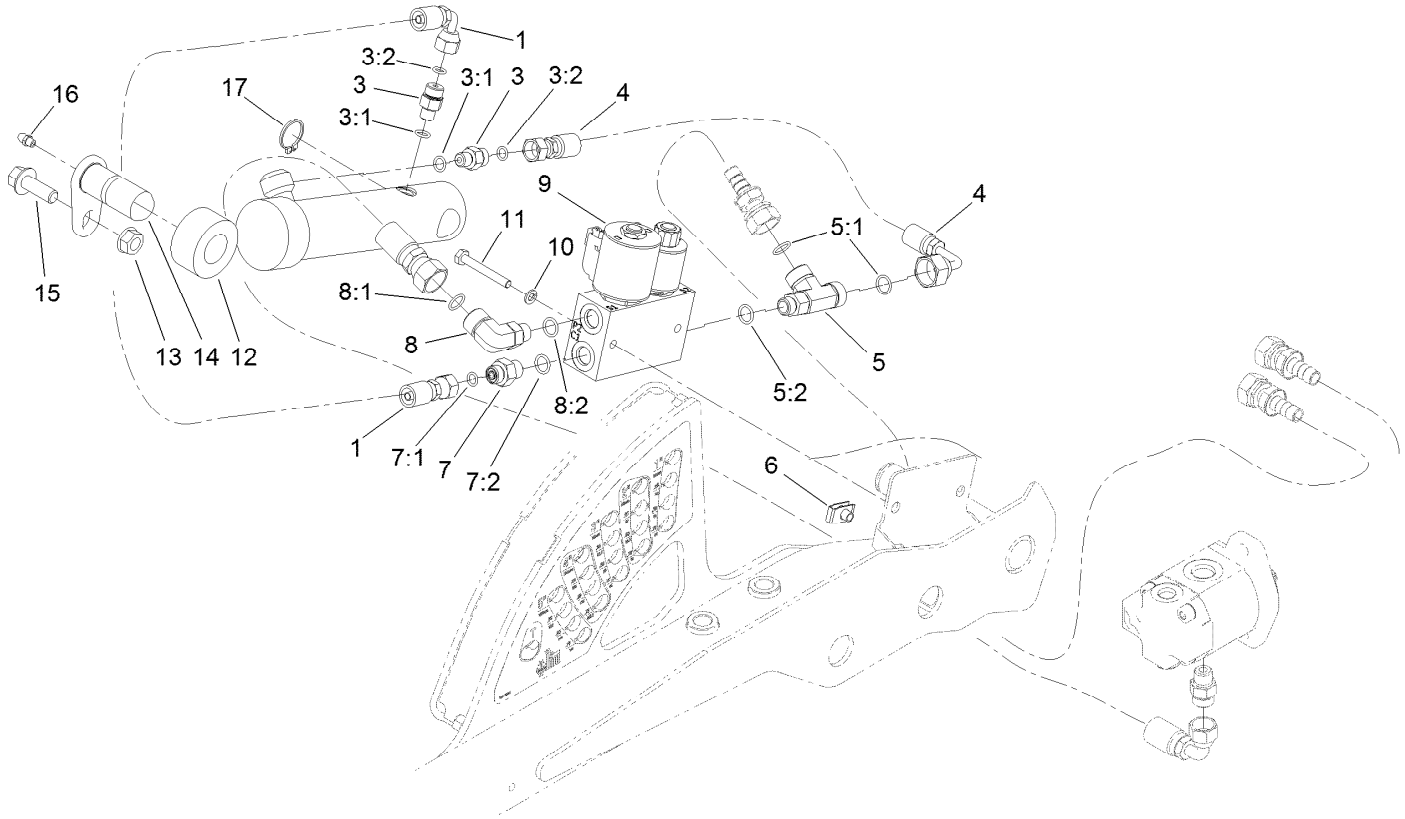

Lift Valve and Cylinder Assembly

Ref.	Part Number	Qty.	Description
1	127-4908	1	Hose-HYD
3	340-92	2	Fitting-Straight
3:1	237-78	1	O-Ring
3:2	237-21	1	O-Ring
4	127-4909	1	Hose-HYD
5	110-0064	1	Fitting-Tee
5:1	237-30	2	O-Ring
5:2	237-42	1	O-Ring
6	107069	2	Clip
7	340-1	1	Fitting-Straight
7:1	237-21	1	O-Ring
7:2	237-42	1	O-Ring

Ref.	Part Number	Qty.	Description
8	340-99	1	Fitting-HYD, 90 DEG
8:1	237-30	1	O-Ring
8:2	237-42	1	O-Ring
9	131-1934	1	Deck Lift Valve ASM
10	3253-3	2	Washer-Lock
11	321-11	2	Screw-HH
12	110-9834	1	HYD Cylinder ASM
13	32128-37	1	Nut-HF
14	125-1910	1	Pin-Pivot
15	3234-15	1	Screw-HHF
16	302-5	1	Fitting-Grease
17	32151-36	1	Ring-Retaining

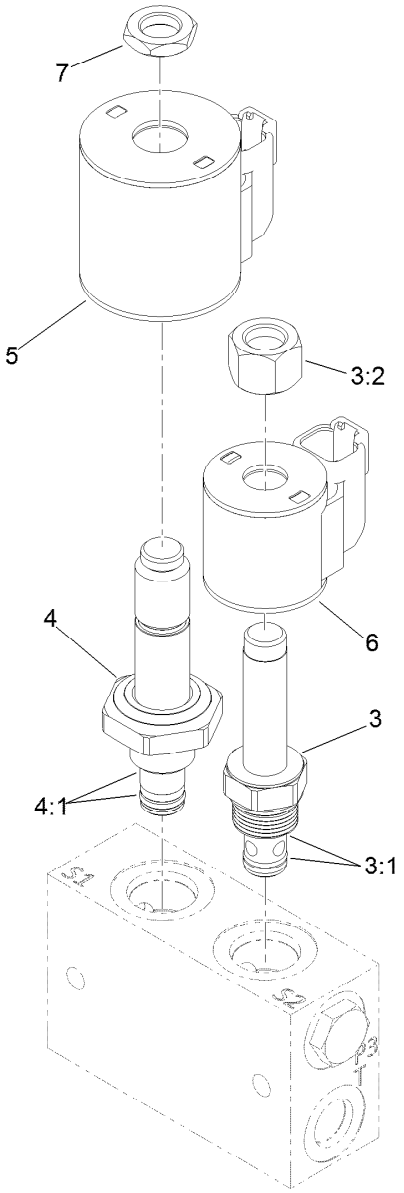

Valve Assembly No. 131-1934

Ref.	Part Number	Qty.	Description
3	107-7517	1	Valve-Solenoid
3:1	105-9156	1	Seal Kit
3:2	107-7812	1	Nut-Solenoid
4	131-1935	1	Valve-Solenoid
4:1	107-7527	1	Seal Kit
5	115-3021	1	Coil-12V
6	119-8036	1	Coil
7	110-2634	1	Nut-Coil

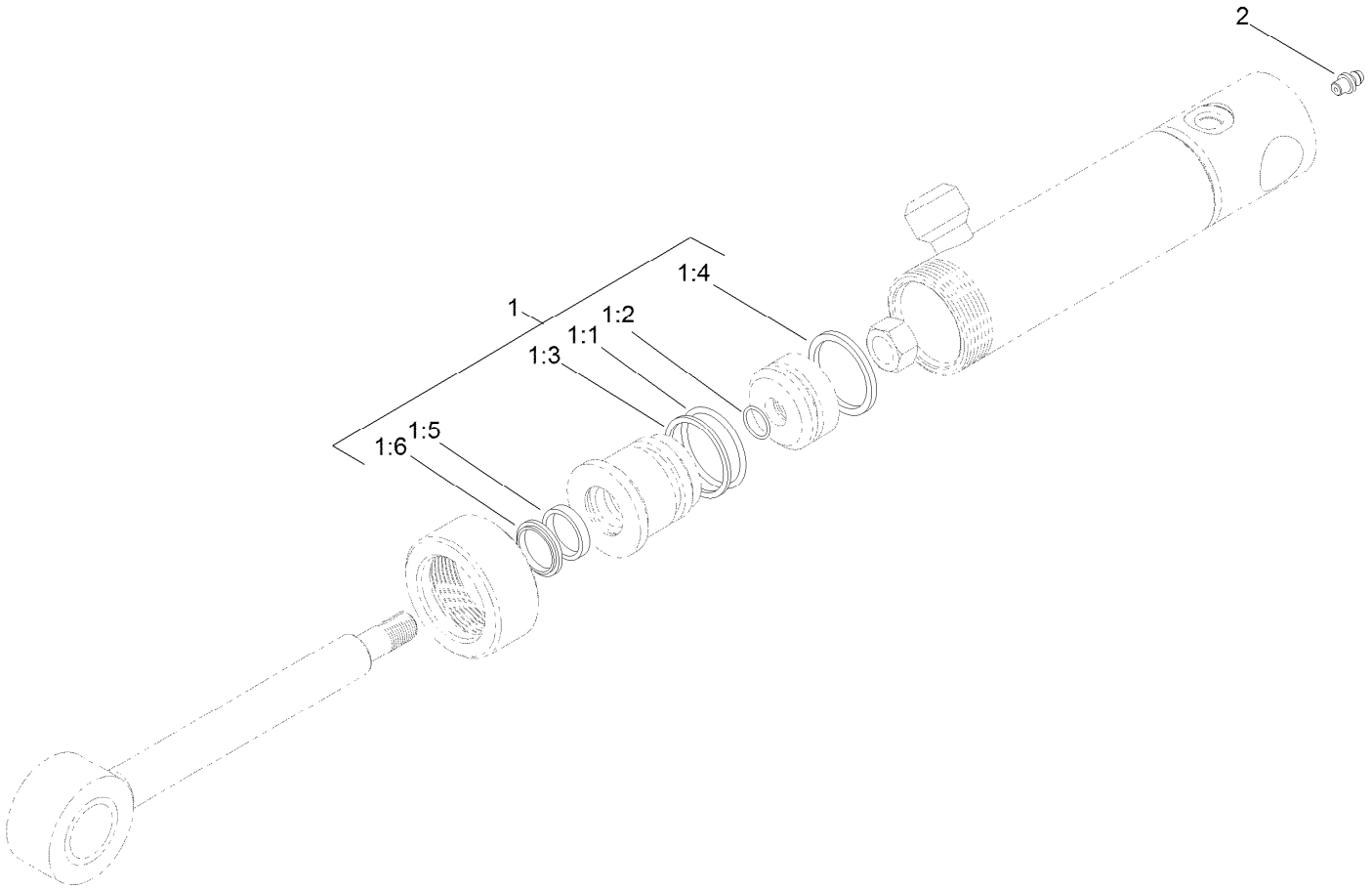

Hydraulic Cylinder Assembly No. 110-9834

Ref.	*Part Number*	*Qty.*	*Description*
1	112-6353	1	Seal Kit
1:1		1	O-Ring ●
1:2		1	O-Ring ●
1:3		1	Backup ●
1:4		1	Seal-Bp ●
1:5		1	Seal-Rod ●
1:6		1	Seal-Dust ●
2	302-60	1	Fitting-Grease

● Not serviced separately

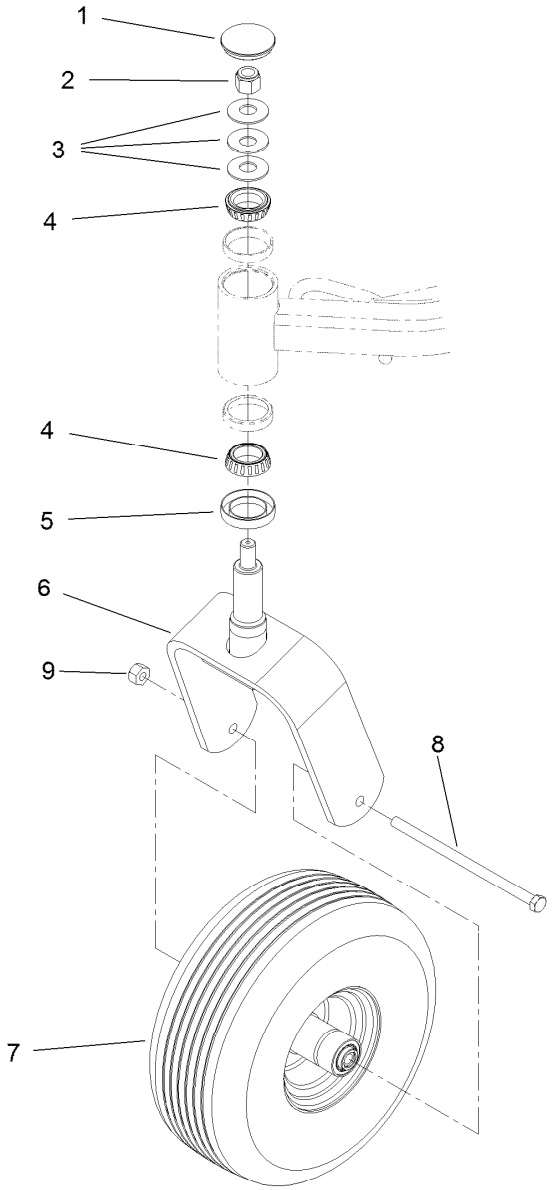

Caster Wheel Assembly

Ref.	Part Number	Qty.	Description
1	108-9950	2	Cap-Grease
2	3296-51	2	Nut-Lock, NI
3	108-9957	6	Washer-Belleville
4	254-106	4	Cone-Bearing, Tapered
5	69-2980	2	Seal
6	108-9946-03	2	Fork-Caster
7	133-4723	2	Caster Wheel ASM
8	325-39	2	Screw-HH
9	3296-25	2	Nut-Lock, NI

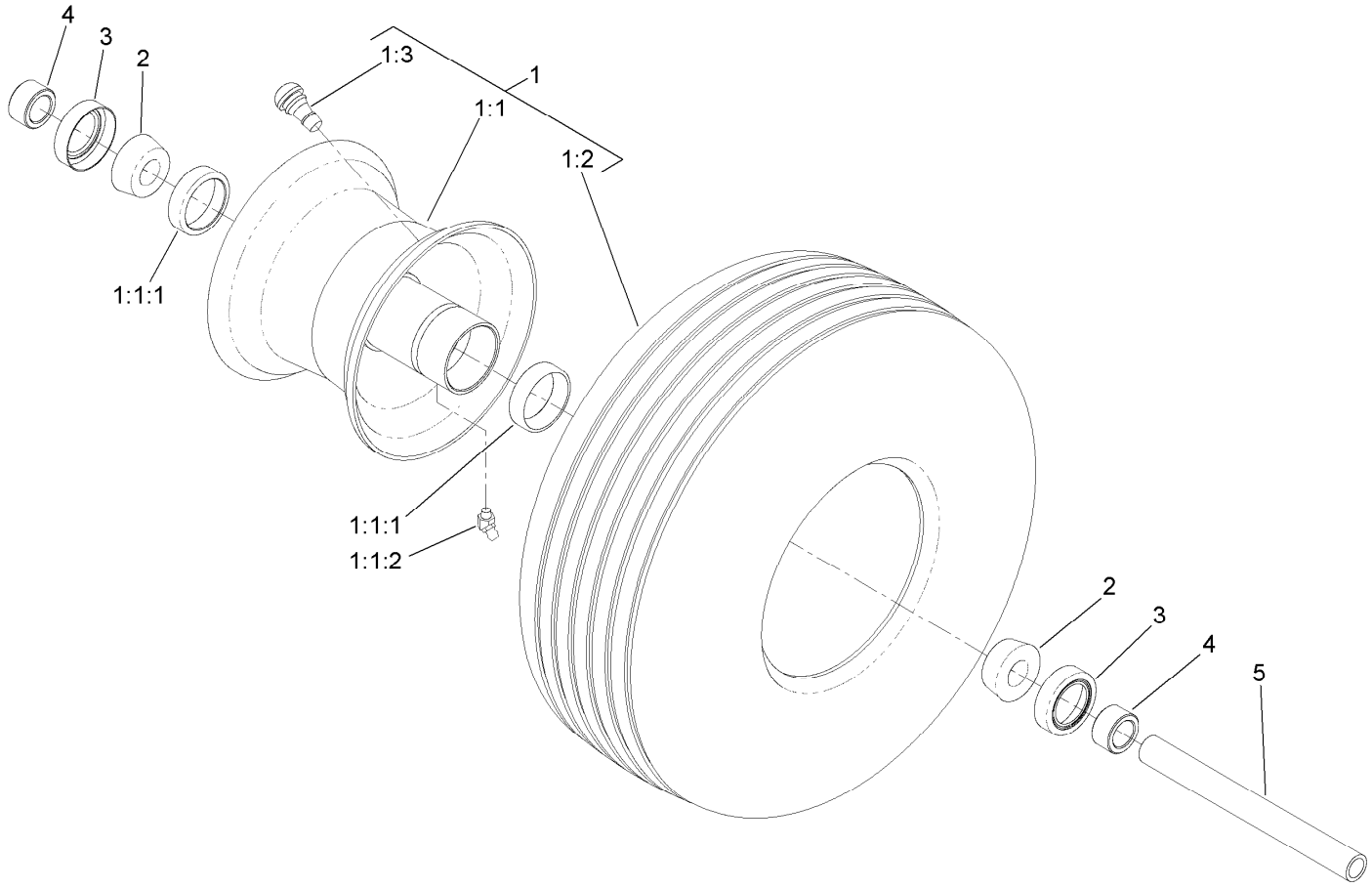

Caster Wheel Assembly No. 133-4723

Ref.	*Part Number*	*Qty.*	*Description*
1	133-4730	1	Tire And Wheel ASM
1:1	133-4725	1	Wheel
1:1:1	1-633584	2	Bearing-Cup
1:1:2	302-11	1	Fitting-Lube, 45 DEG
1:2	133-4724	1	Tire
1:3	5108	1	Valve
2	1-633585	2	Bearing-Cone, Taper
3	1-633580	2	Seal-Bearing
4	1-633581	2	Spacer-Bearing
5	138-1933	1	Spacer, Front Caster

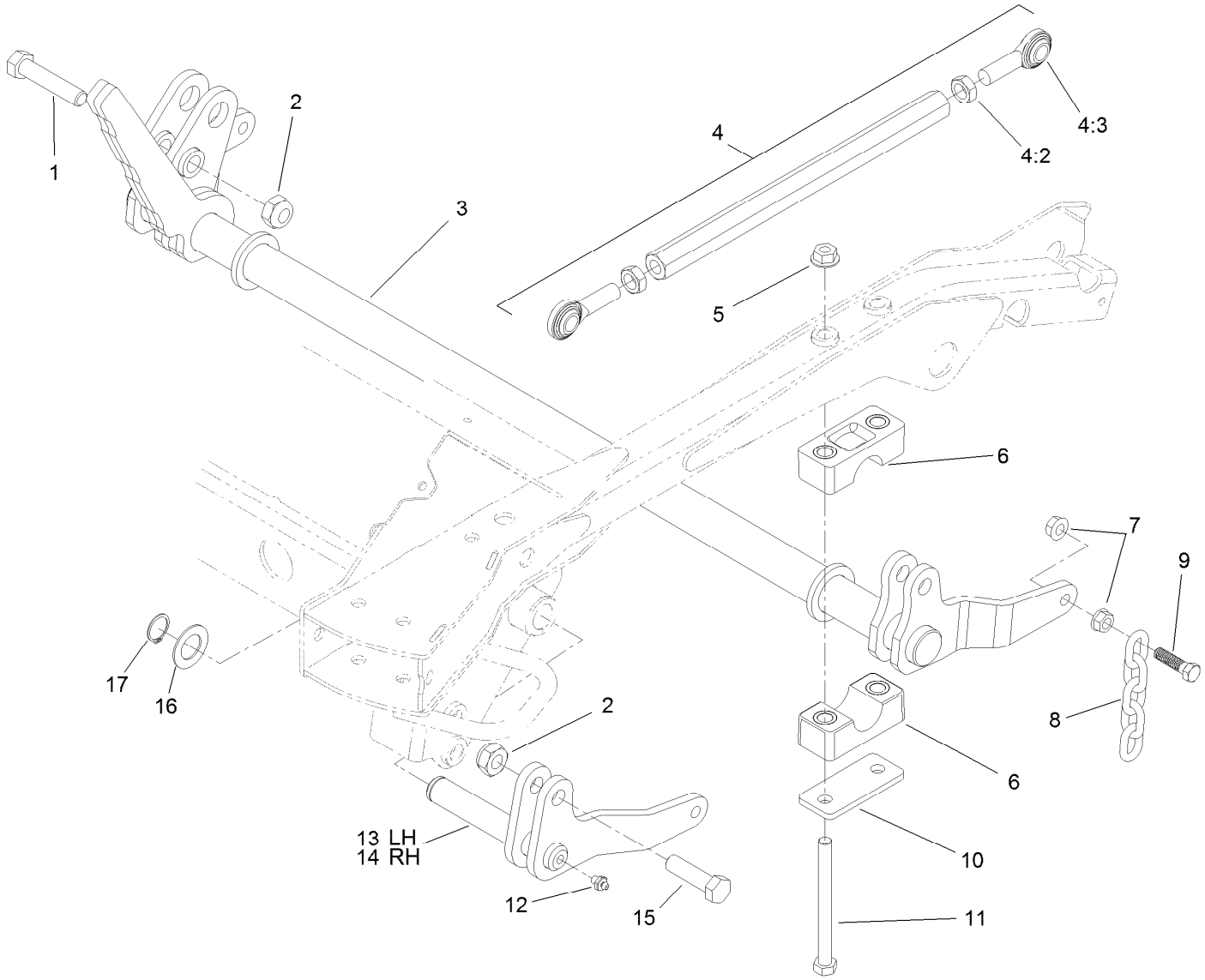

Deck Lift Assembly

Ref.	Part Number	Qty.	Description
1	104-5895	1	Screw-HH
2	3296-61	4	Nut-Lock
3	117-9220-03	1	Shaft-Lift
4	114-4059	2	Link ASM
4:2	3220-6	2	Nut-Jam
4:3	1-633029	2	Balljoint-Spherical
5	32128-49	4	Nut-HHF
6	115-0491	4	Cap-Bearing
7	32128-37	8	Nut-HF
8	1-633447	4	Chain-Lift, Deck

Ref.	Part Number	Qty.	Description
9	103-1898	4	Screw-HH
10	117-2903	2	Plate-Bearing
11	325-22	4	Screw-HH
12	302-2	2	Fitting-Grease
13	110-9818-03	1	Lift-LH
14	110-9820-03	1	Lift-RH
15	327-22	3	Screw-HH
16	69-9010	2	Washer
17	32151-29	2	Ring-Retaining

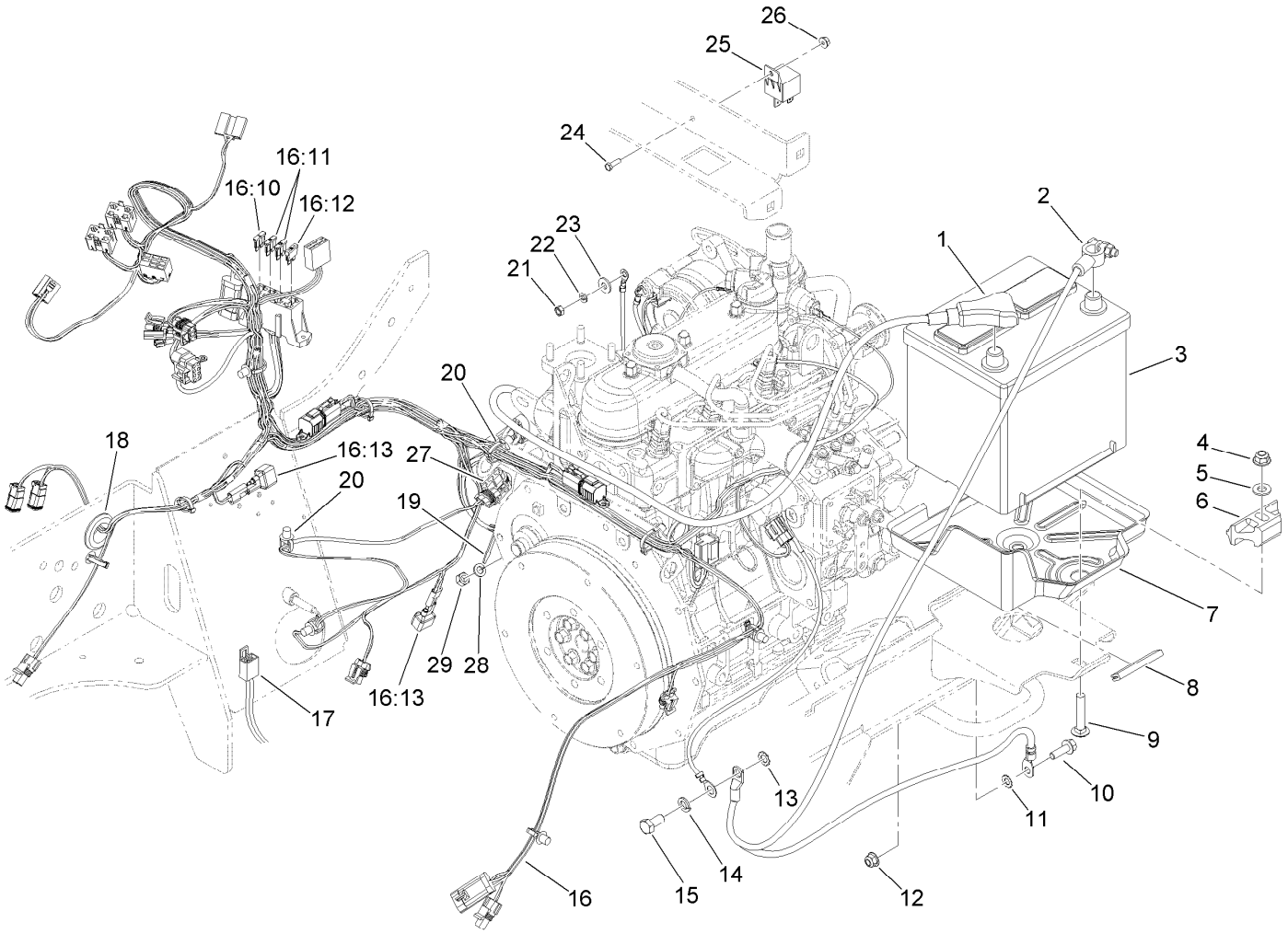

Electrical Assembly

Ref.	Part Number	Qty.	Description
1	119-1796	1	Cable-Battery, Positive
2	105-0040	1	Cable-Battery, Negative
3	106-5187	1	Battery-Dry
4	104-8301	1	Nut-HF, NI
5	3256-24	1	Washer-Flat
6	138-6335	1	Retainer-Battery
7	133-4913	1	Tray-Battery
8	110-8276	1	Trim-Hold Down, Battery
9	3231-6	1	Screw-CARR
10	3234-17	1	Screw-HHF
11	3255-8	1	Washer-Lock
12	104-8300	1	Nut-HF, NI
13	3255-9	1	Washer-Lock
14	48-9590	1	Washer-Lock
15	63-7790	1	Screw-Cap
16	122-1414	1	Harness-Wire
16:10	94-6710	1	Fuse-2 Amp

Ref.	Part Number	Qty.	Description
16:11	218-578	2	Fuse-Blade, 10 Amp
16:12	109355	1	Fuse-Blade, 15 Amp
16:13	100-4918	2	Diode
17	108-8657	1	Harness-Wire, Seat
18	237-165	1	Grommet
19	3290-378	2	Tie-Cable
20	32180-030	2	Clip-Tie
21	33013-00	1	Nut-Hex
22	43-5930	1	Washer-Lock, Spring
23	3256-2	1	Washer-Flat
24	3290-134	1	Screw
25	99-7435	1	Relay
26	3290-148	1	Nut-HF
27	99-3441	1	Harness-Wire, Fusible Link
28	3253-4	1	Washer-Lock
29	33014-00	1	Nut-Hex

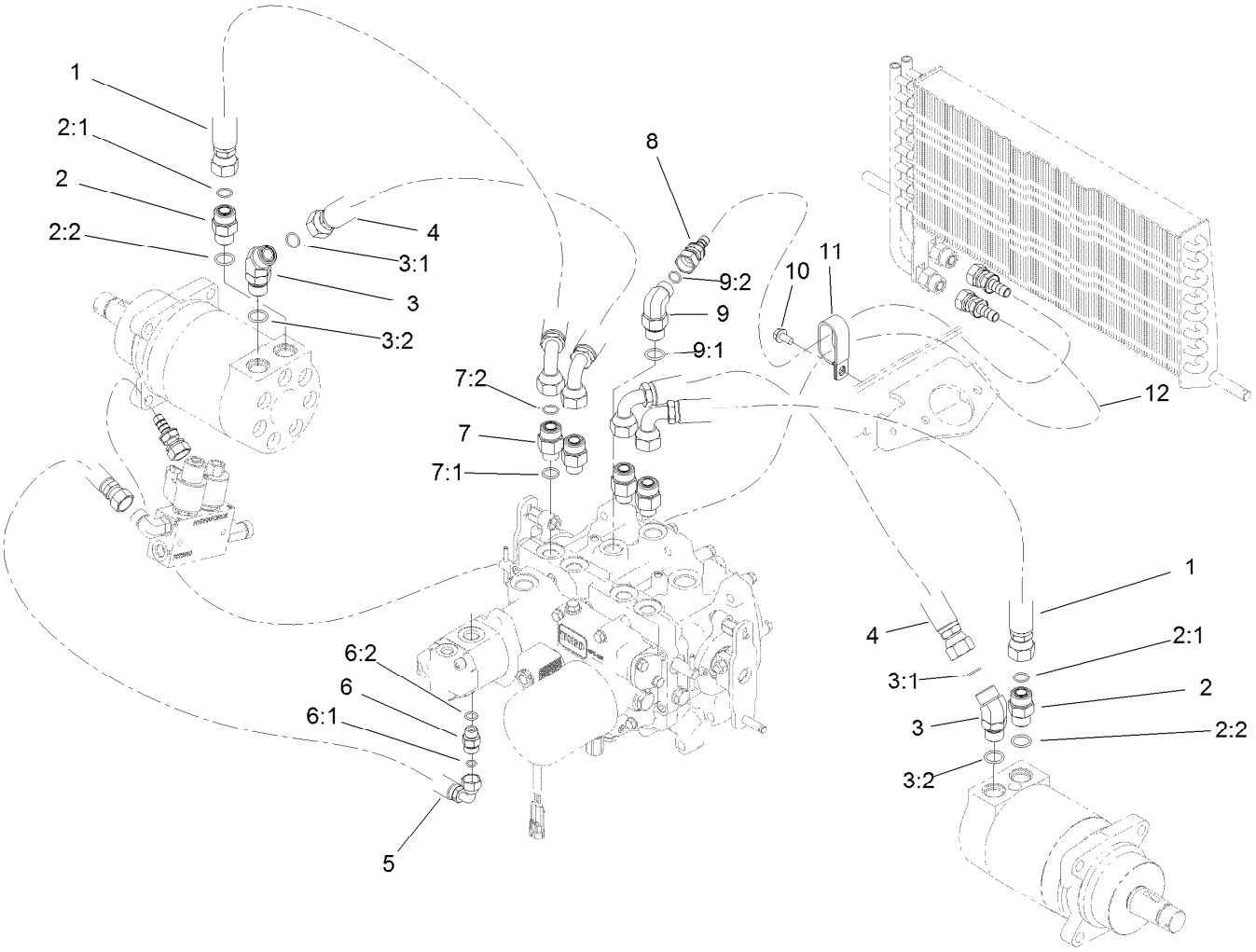

Transmission and Oil Cooler Hydraulic Assembly

Ref.	Part Number	Qty.	Description
1	112-1683	2	Hose
2	340-7	2	Fitting-Straight
2:1	237-65	1	O-Ring
2:2	237-80	1	O-Ring
3	340-14	2	Fitting-HYD, 45 DEG
3:1	237-65	1	O-Ring
3:2	237-80	1	O-Ring
4	110-5518	2	Hose
5	127-4910	1	Hose-HYD
6	340-2	1	Fitting-Straight
6:1	237-22	1	O-Ring

Ref.	Part Number	Qty.	Description
6:2	237-42	1	O-Ring
7	340-155	4	Fitting-Straight
7:1	237-79	1	O-Ring
7:2	237-151	1	O-Ring
8	110-5542	1	Hose-HYD
9	340-105	1	Fitting-Elbow, 90 DEG
9:1	237-80	1	O-Ring
9:2	237-30	1	O-Ring
10	32144-14	1	Screw-HWHTF
11	2412-137	1	Clamp-R, Double
12	110-5543	1	Hose-HYD

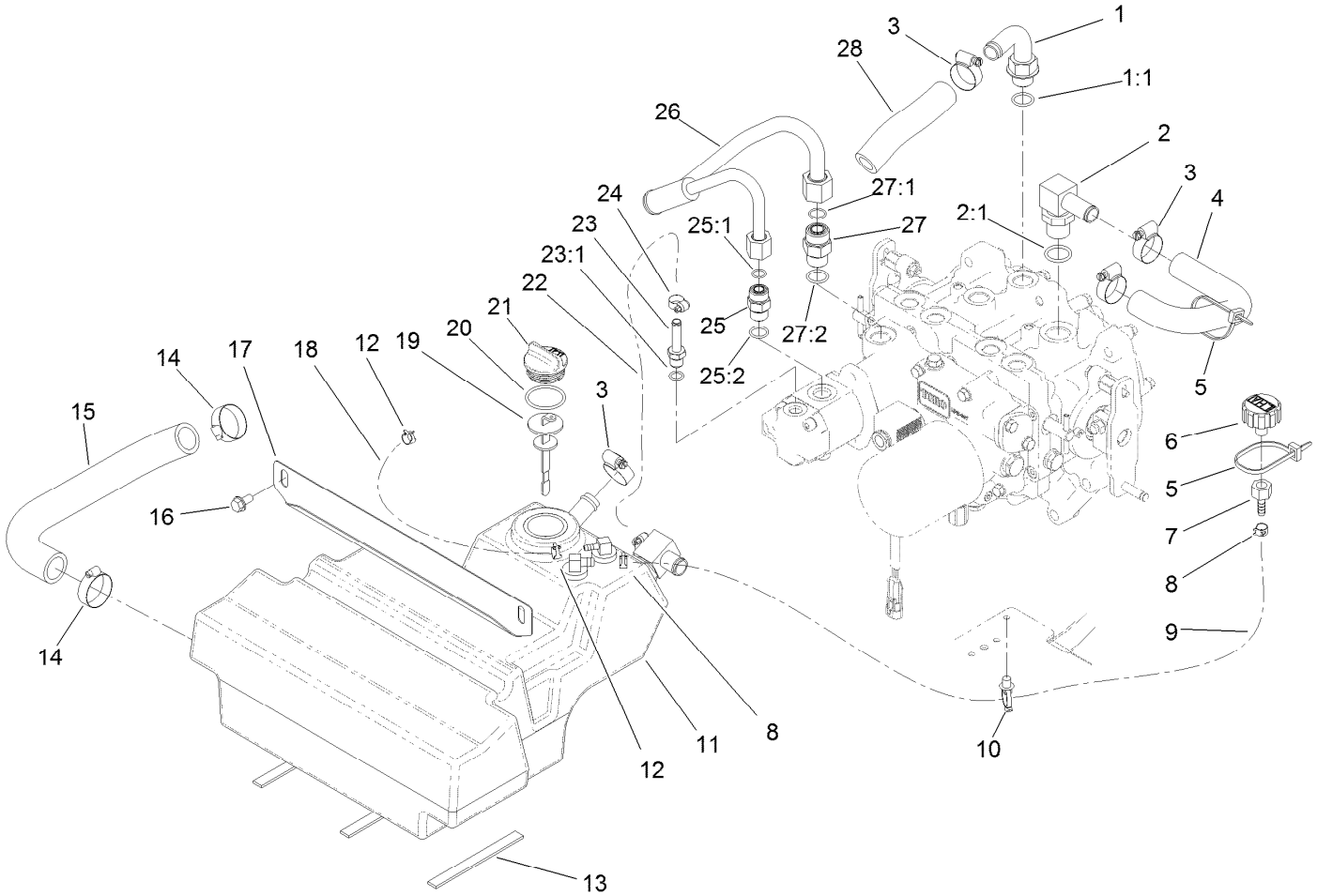

Hydraulic Reservoir Assembly

Ref.	Part Number	Qty.	Description
1	110-5522	1	Fitting-Elbow, 90
1:1	237-80	1	O-Ring
2	353-987	1	Fitting-Elbow, 90
2:1	237-81	1	O-Ring
3	2412-129	4	Clamp-Hose
4	110-5524	1	Hose-Return
5	3290-379	2	Tie-Cable
6	68-6150	1	Breather
7	354-95	1	Fitting-Straight
8	92-2379	2	Clamp-Hose
9	110-9662	1	Hose-Fuel
10	32180-030	1	Clip-Tie
11	110-8237	1	HYD Reservoir ASM
12	2412-98	2	Clamp-Hose
13	120-0017	3	Strip-Foam
14	2412-34	2	Clamp-Hose
15	110-5526	1	Hose-Suction
16	32144-14	2	Screw-HWHTF

Ref.	Part Number	Qty.	Description
17	110-5529-03	1	Support-Reservoir
18	109-0299	1	Hose-Fuel
19	112-6365	1	Dipstick
20	94-8166	1	O-Ring
21	93-7498	1	Plug-Plastic
22	94-5625	1	Hose
23	353-979	1	Fitting-STR
23:1	237-42	1	O-Ring
24	2412-108	2	Clamp-Worm
25	340-4	1	Fitting-Straight
25:1	237-30	1	O-Ring
25:2	237-79	1	O-Ring
26	110-5532	1	Tube
27	340-7	1	Fitting-Straight
27:1	237-65	1	O-Ring
27:2	237-80	1	O-Ring
28	112-1680	1	Hose-HYD

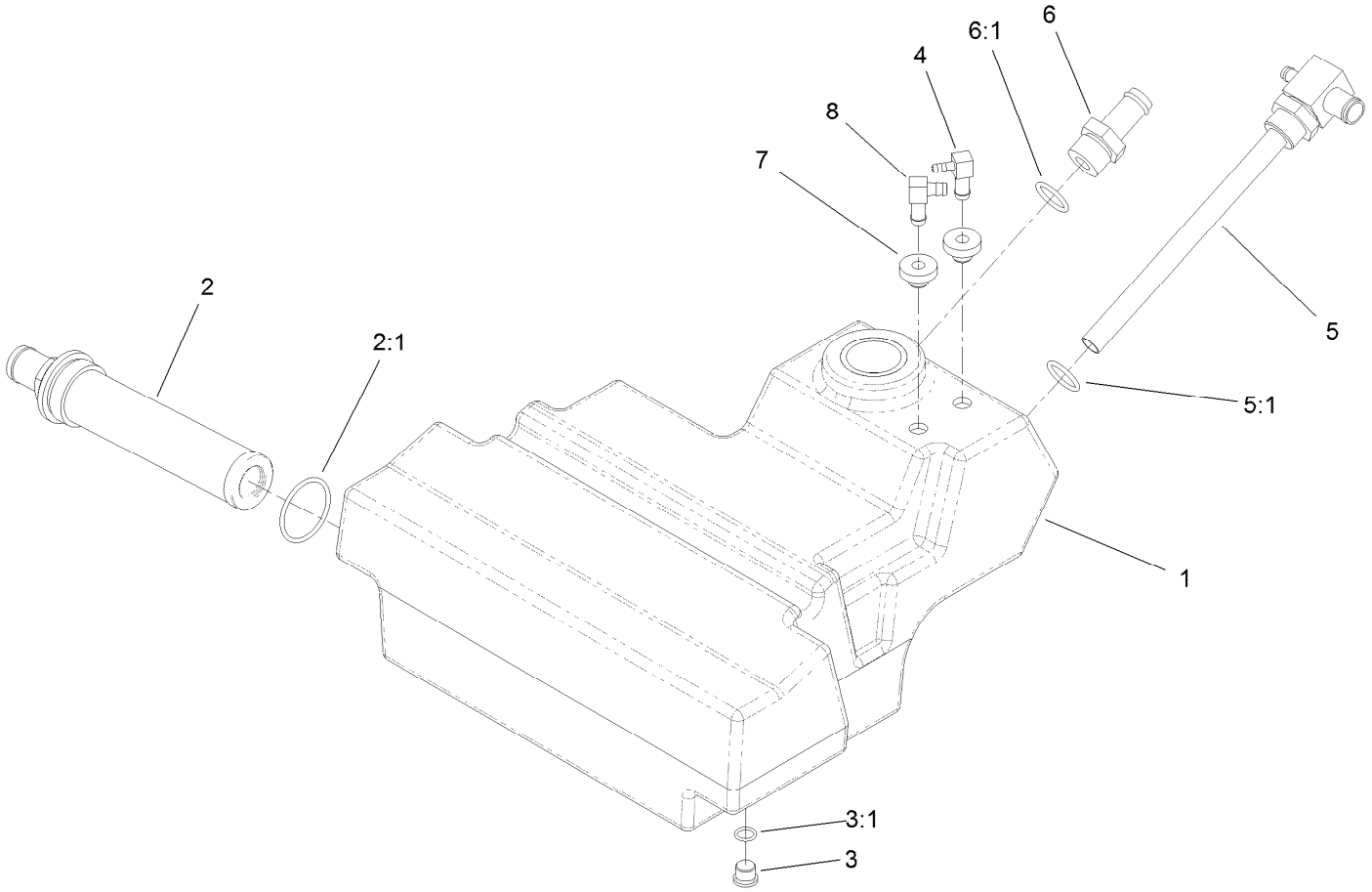

Hydraulic Reservoir Assembly No. 110-8237

Ref.	*Part Number*	*Qty.*	*Description*
1	108-5200	1	Reservoir-HYD
2	104-7546	1	Tank Strainer ASM
2:1	340-136	1	O-Ring
3	353-989	1	Plug-Hex, Hollow
3:1	237-42	1	O-Ring
4	104-5228	1	Fitting-Elbow, 90 DEG
5	108-9894	1	Fitting-Elbow, Special
5:1	237-81	1	O-Ring
6	354-73	1	Fitting
6:1	237-81	1	O-Ring
7	46-6560	2	Bushing
8	46-6550	1	Fitting-Elbow, 90 DEG

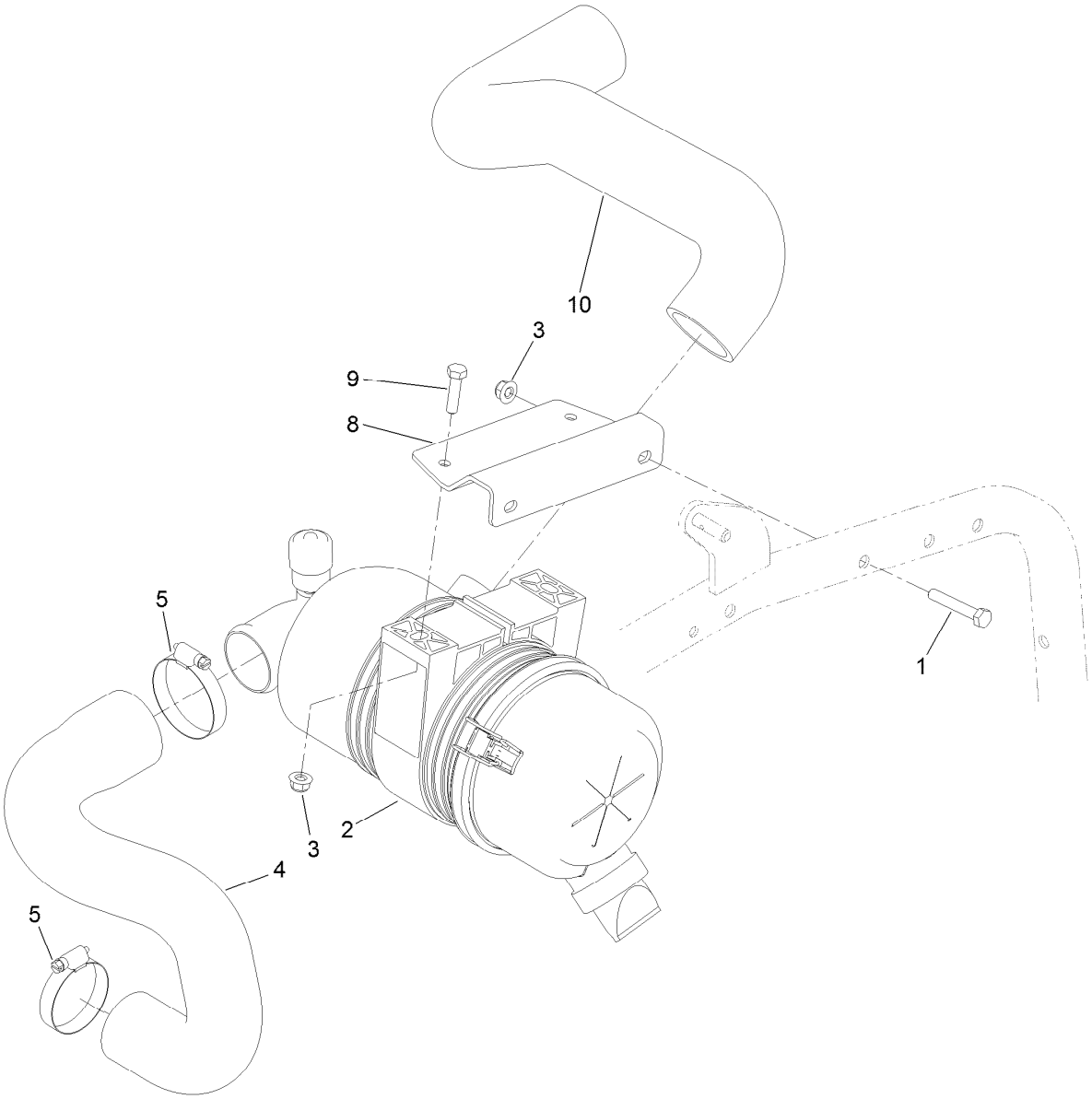

Air Cleaner Assembly

Ref.	*Part Number*	*Qty.*	*Description*
1	322-10	2	Screw-HH
2	136-4481	1	Air Cleaner ASM
3	104-8300	4	Nut-HF, NI
4	105-7236	1	Hose-Inlet, Air
5	2412-130	2	Clamp-Hose
8	108-9843-03	1	Support-Cleaner, Air
9	322-6	2	Screw-HH
10	105-7281	1	Hose-Air Inlet, Upper

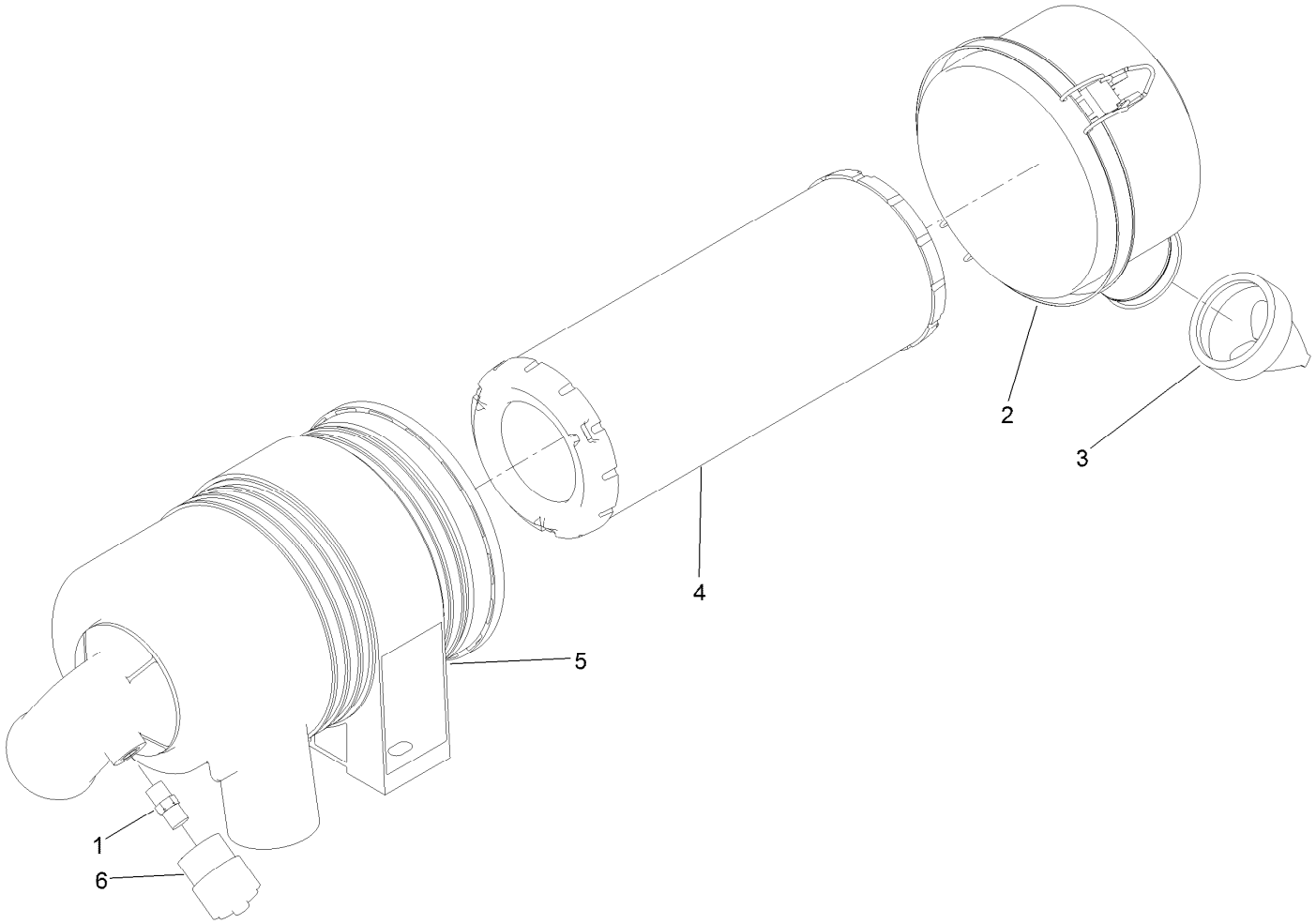

Air Cleaner Assembly No. 136-4481

Ref.	*Part Number*	*Qty.*	*Description*
1	94-1416	1	Adapter-Indicator
2	98-9771	1	Cover ASM
3	94-1414	1	Valve-Vacuator
4	108-3810	1	Filter-Air
5	98-4525	1	Bracket-Cleaner, Air
6	93-9164	1	Indicator-Mini

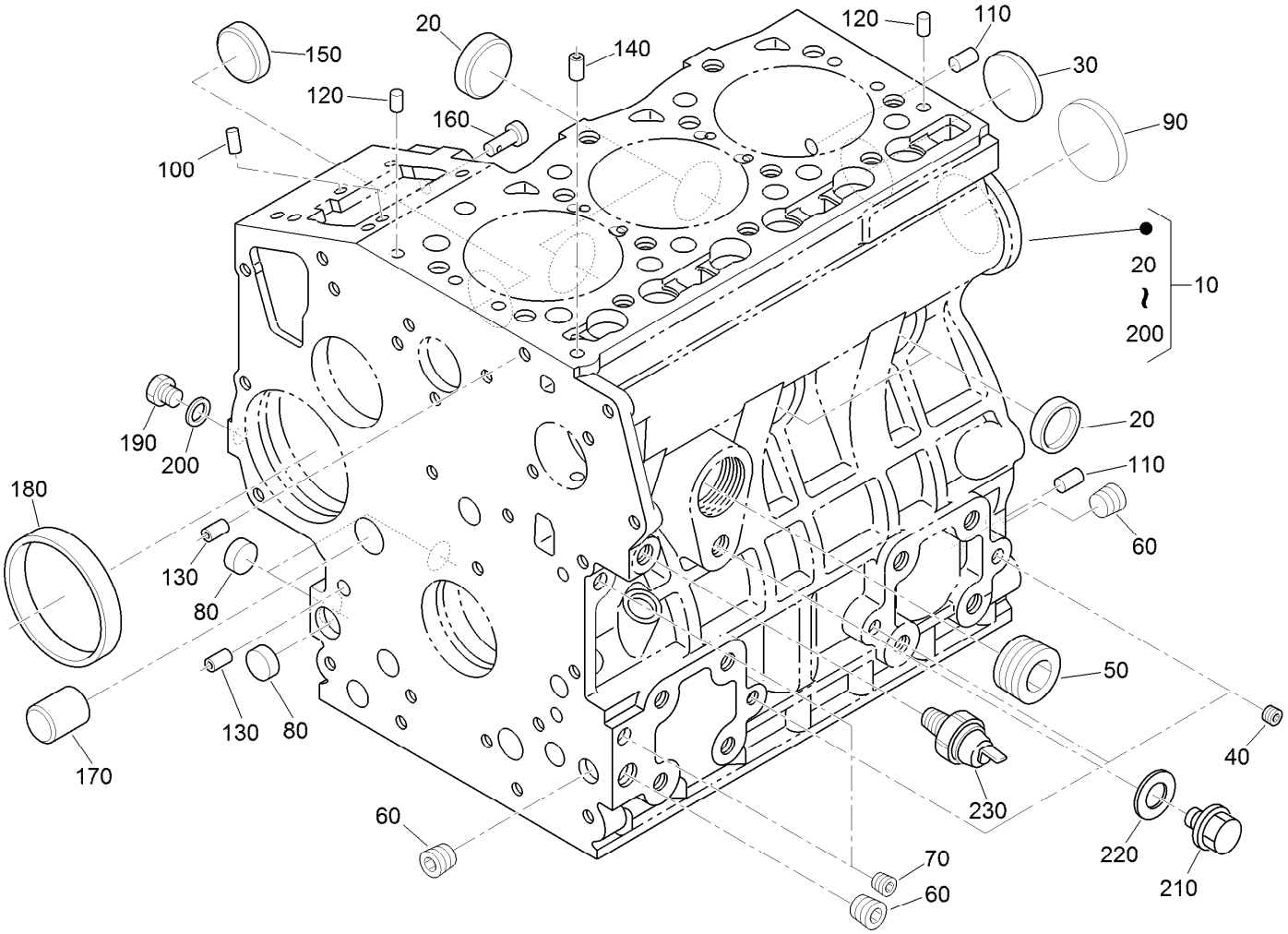

Crankcase Assembly

Ref.	Part Number	Qty.	Description
10	115-3443	1	Crankcase ASM
20	98-9398	4	Cap-Sealing
30	98-7539	1	Cap-Sealing
40	98-9687	3	Plug
50	105-3779	1	Plug
60	98-9597	3	Plug
70	98-7487	2	Plug
80	98-9379	3	Plug-Expansion
90	98-9668	1	Plug-Expansion
100	98-9375	2	Pin-Straight
110	98-9377	2	Pin-Straight
120	98-9376	2	Pin-Straight

Ref.	Part Number	Qty.	Description
130	98-9387	2	Pin-Pipe
140	98-9539	1	Pin-Pipe
150	98-9599	1	Plug
160	98-9630	1	Pin-Spring, Start
170	98-9675	1	Plug
180	98-9656	1	Bushing-Governor, Gear
190	120-2559	1	Plug
200	98-7428	1	Gasket
210	99-3447	1	Plug
220	106-7056	1	Gasket
230	98-9416	1	Switch-Oil

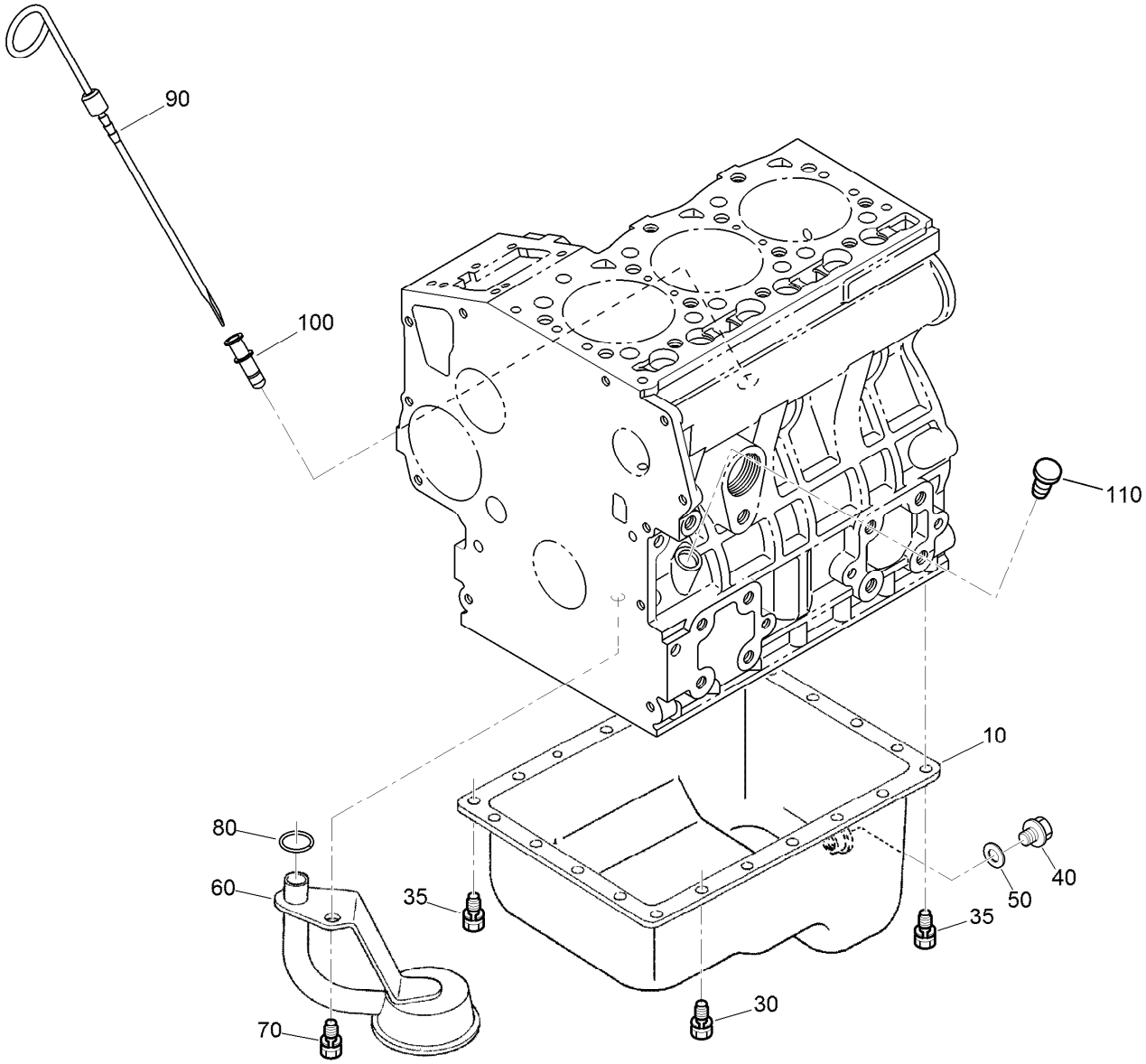

Oil Pan and Dipstick Assembly

Ref.	*Part Number*	*Qty.*	*Description*
10	112-0179	1	Pan-Oil
30	98-9351	20	Bolt
35	98-9351	2	Bolt
40	114-8151	1	Plug-Drain
50	98-7524	1	Gasket
60	108-1401	1	Base-Filter
70	98-7526	1	Bolt
80	105-3776	1	O-Ring
90	104-9348	1	Gauge-Oil
100	105-4580	1	Guide-Gauge, Oil
110	110-3720	1	Plug-Gauge, Oil

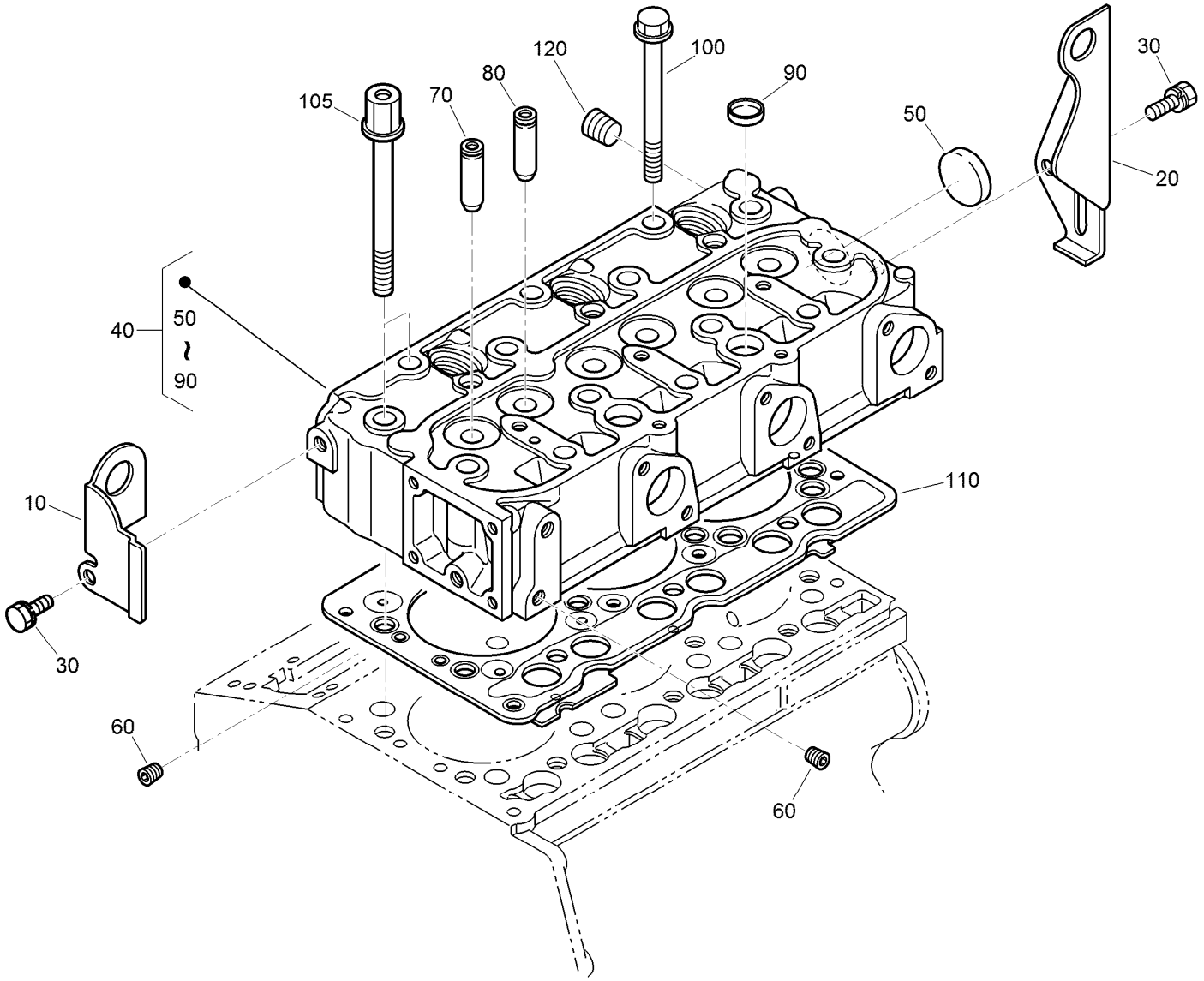

Cylinder Head Assembly

Ref.	Part Number	Qty.	Description
10	130-1231	1	Hook-Engine
20	98-9478	1	Hook-Engine
30	100-9195	2	Bolt
40	130-1544	1	Cylinder Head ASM
50	105-3705	1	Cap-Sealing
60	98-9687	2	Plug
70	107-9066	3	Guide-Valve, Inlet
80	107-9067	3	Guide-Valve, Exhaust
90	98-9389	2	Cap-Sealing
100	98-9479	12	Bolt-Head, Cylinder
105	98-9479	2	Bolt-Head, Cylinder
110	108-6573	1	Gasket-Head, Cylinder
120	98-9444	1	Plug

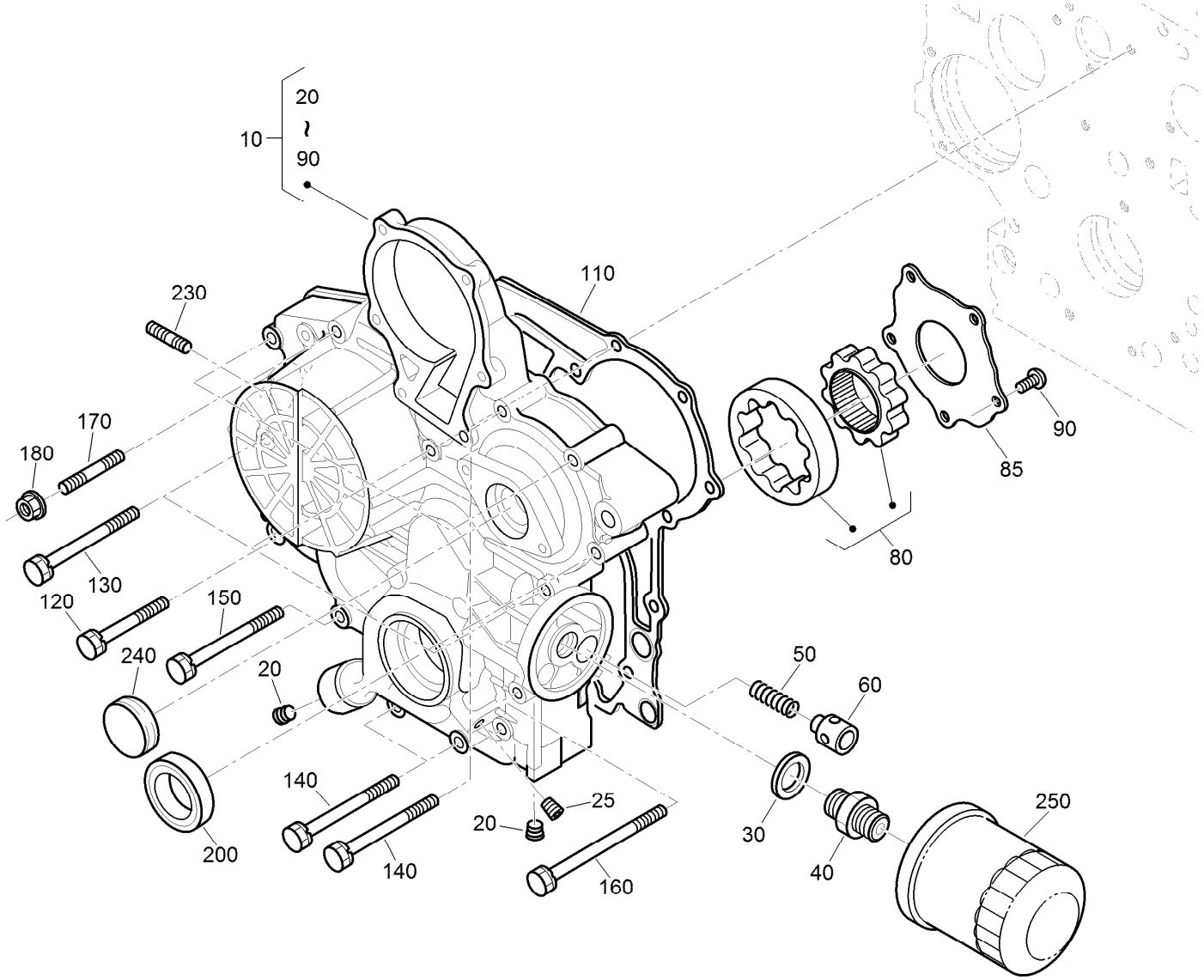

Gear Case and Oil Filter Cartridge Assembly

Ref.	Part Number	Qty.	Description
10	115-4105	1	Gear Case ASM
20	127-0425	2	Plug
25	98-7487	1	Plug
30	98-7562	1	Washer-Plain
40	98-9388	1	Joint-Pipe
50	130-1511	1	Spring
60	130-1510	1	Valve-Relief
80	130-1508	1	Rotor ASM
85	130-1509	1	Cover-Pump, Oil
90	130-1164	5	Screw-Binding
110	98-9633	1	Gasket-Case, Gear

Ref.	Part Number	Qty.	Description
120	100-1765	3	Bolt
130	125-9063	4	Bolt-Sems
140	98-9356	4	Bolt
150	107-9074	1	Bolt
160	99-3510	1	Bolt
170	105-3709	1	Stud
180	100-2203	1	Nut-Flange
200	119-8038	1	Seal-Oil
230	105-3710	2	Stud
240	99-3515	1	Plug-Gearcase
250	127-0511	1	Filter-Oil

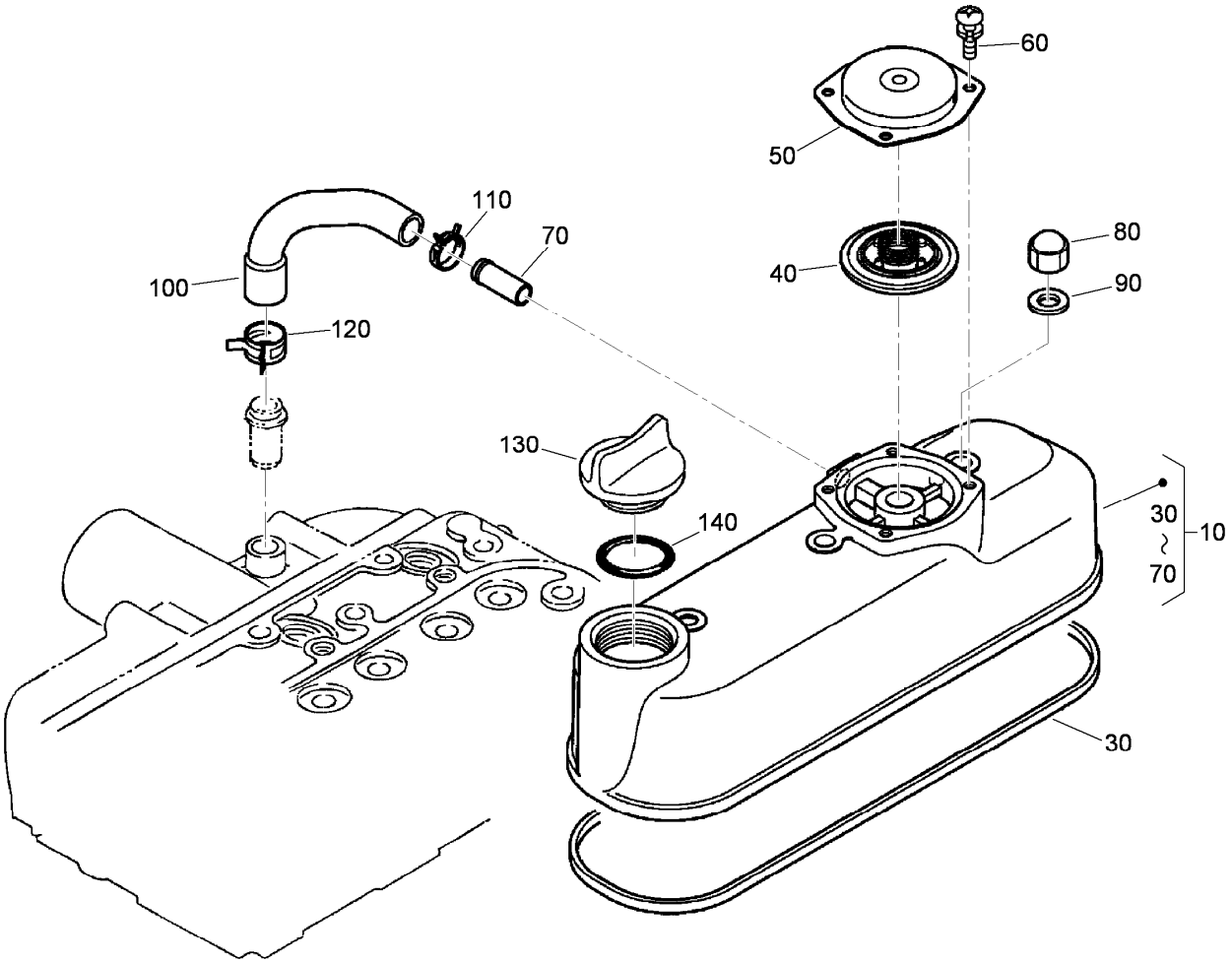

Cylinder Head Cover Assembly

Ref.	*Part Number*	*Qty.*	*Description*
10	115-3446	1	Cylinder Head Cover ASM
30	98-9615	1	Gasket-Cover, Head
40	110-3715	1	Valve-Breather
50	110-3714	1	Cover-Breather
60	98-9364	4	Screw (With Washer)
70	98-7766	1	Pipe-Return, Water
80	98-9455	3	Nut-Cap
90	98-9454	3	Gasket
100	108-2858	1	Tube-Breather
110	108-2859	1	Clamp-Hose
120	108-2860	1	Clamp-Hose
130	107-9075	1	Plug-Filler, Oil
140	99-3446	1	O-Ring

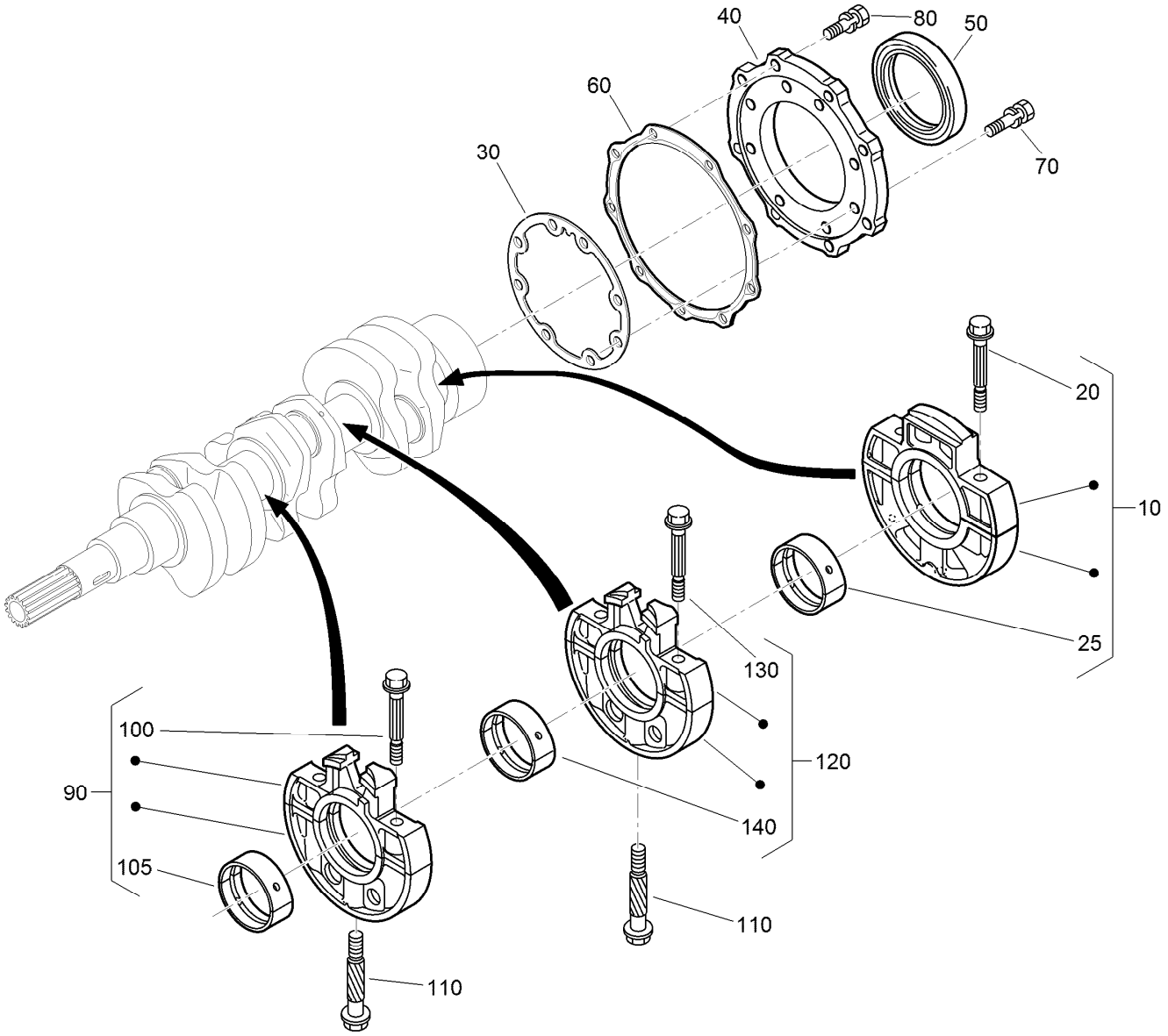

Main Bearing Case Assembly

Ref.	Part Number	Qty.	Description
10	112-7026	1	Wheel Bearing Case ASM
20	98-9484	2	Bolt-Case, Bearing
25	115-4121	1	Metal-Crankshaft (STD)
25	112-7039	1	Metal-Crankshaft (0.2Mm)
25	112-7040	1	Metal-Crankshaft (-0.4Mm)
30	131-6554	1	Gasket-Case, Bearing
40	112-7046	1	Cover-Case, Bearing
50	112-0180	1	Seal-Oil
60	112-7037	1	Gasket-Cover, Case
70	127-0441	8	Bolt
80	127-0442	9	Bolt

Ref.	Part Number	Qty.	Description
90	115-4106	1	Main Bearing Case ASM
100	98-9484	2	Bolt-Case, Bearing
105	98-9524	1	Metal-Crankshaft (STD Set)
105	127-0433	1	Metal-Crankshaft (-0.2Mm)
105	98-9531	1	Bearing-Main (0.4Mm)
110	98-9485	2	Bolt-Case, Bearing
120	115-4107	1	Main Bearing Case ASM
130	98-9484	2	Bolt-Case, Bearing
140	98-9524	1	Metal-Crankshaft (STD Set)
140	127-0433	1	Metal-Crankshaft (-0.2Mm)
140	98-9531	1	Bearing-Main (0.4Mm)

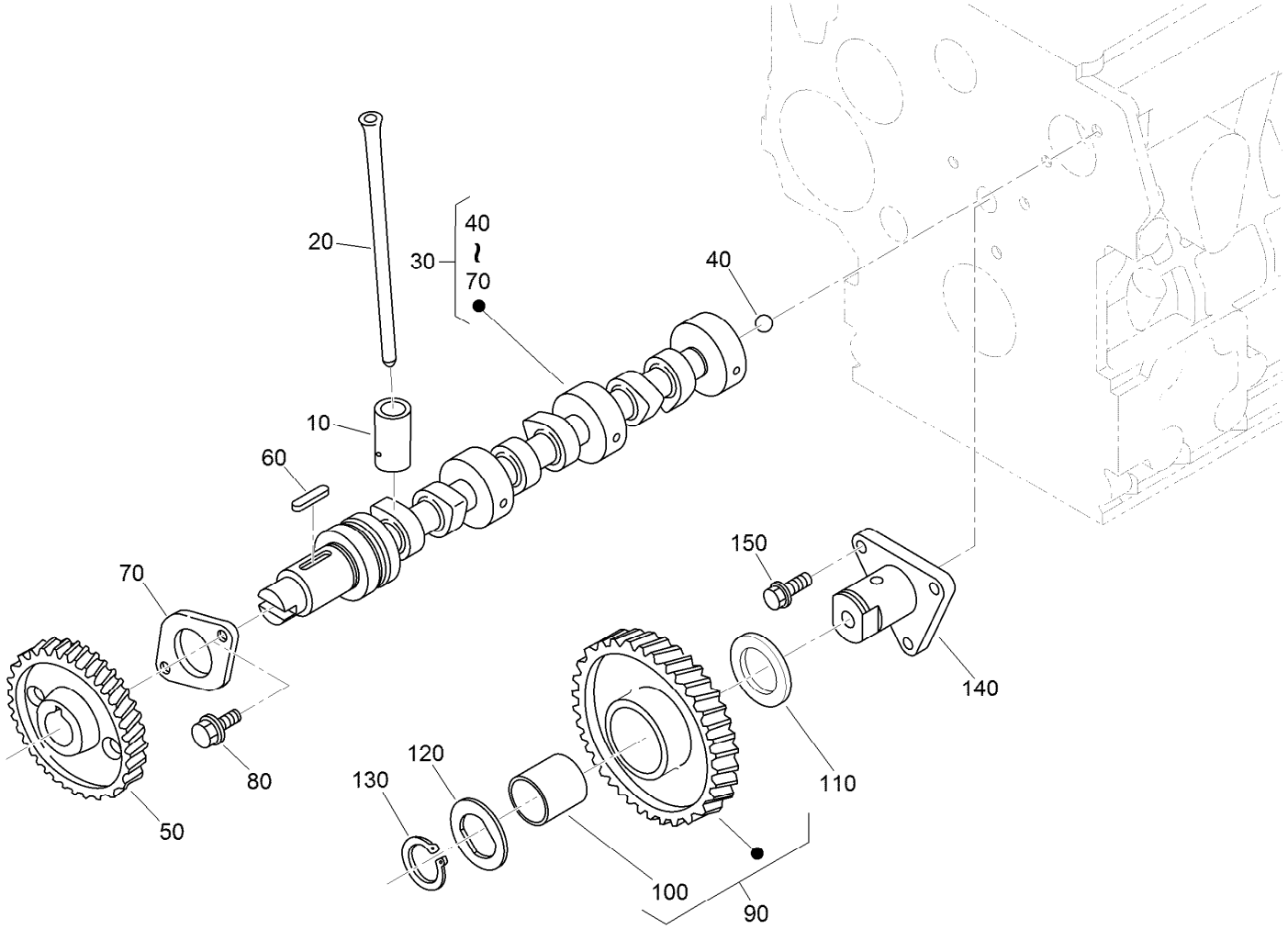

Camshaft and Idle Gear Shaft Assembly

Ref.	Part Number	Qty.	Description
10	112-0185	1	Tappet
20	127-0421	6	Rod-Push
30	130-1545	1	Camshaft ASM
40	110-3729	1	Ball
50	98-9512	1	Gear-Cam
60	98-9378	1	Key-Feather
70	98-9510	1	Stopper-Camshaft
80	98-7692	2	Bolt
90	117-7584	1	Idler Gear ASM
100	117-7585	1	Bushing-Gear, Idle
110	98-9535	1	Collar-Gear, Idle
120	98-9536	1	Collar-Gear, Idle
130	98-9534	1	Circlip-Gear, Idle
140	98-9533	1	Shaft-Gear, Idle
150	98-7692	3	Bolt

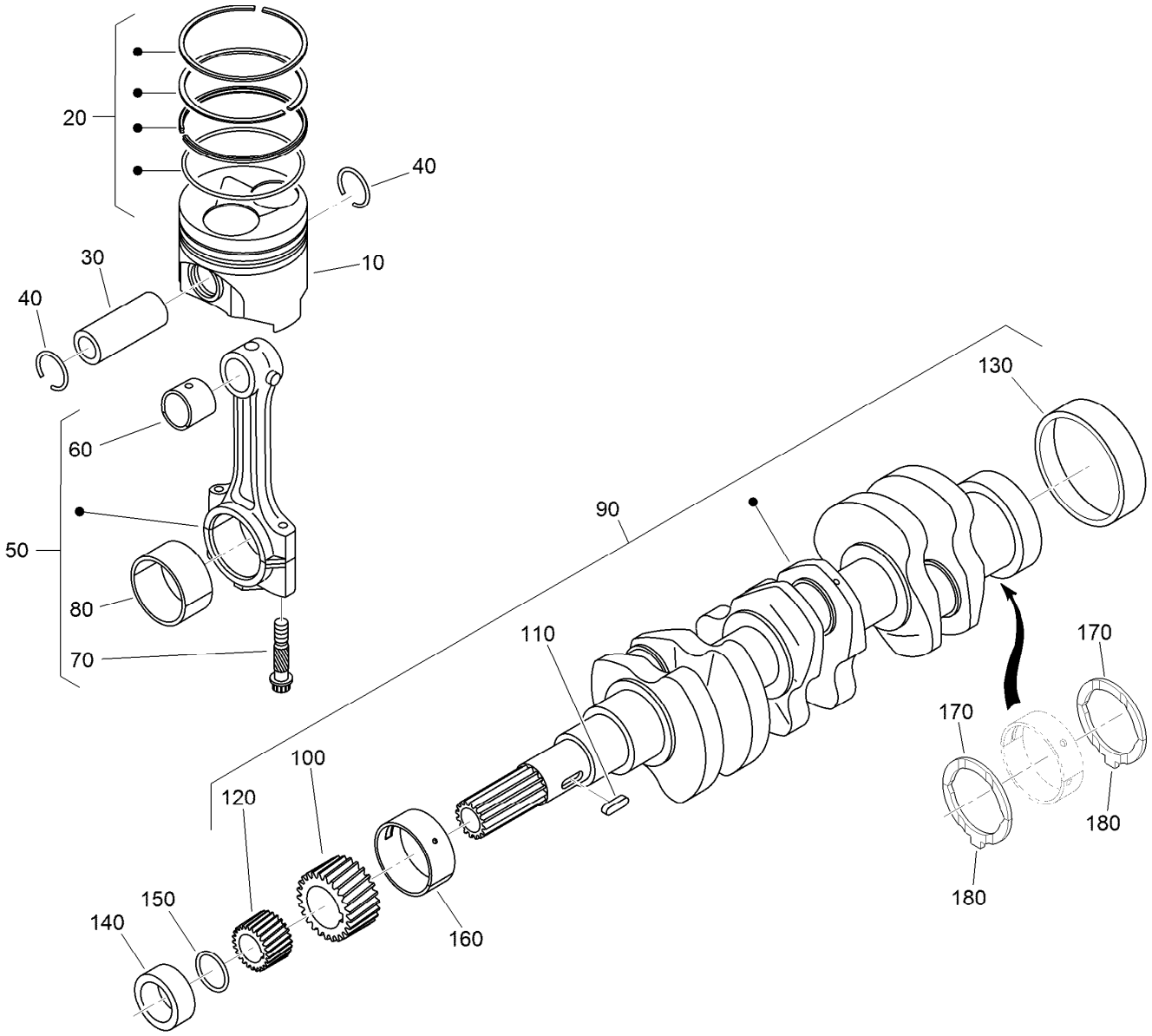

Piston and Crankshaft Assembly

Ref.	Part Number	Qty.	Description
10	130-1546	3	Piston (STD)
10	130-1549	3	Piston (+0.50Mm)
20	130-1506	3	Piston Ring ASM (STD)
20	130-1507	3	Piston Ring ASM (+0.50Mm)
30	98-9513	3	Pin-Piston
40	98-9514	6	Circlip-Pin, Piston
50	117-7586	3	Connecting Rod ASM
60	115-3014	3	Bushing-Pin, Piston
70	98-9517	6	Bolt-Rod, Connecting
80	98-9553	3	Bearing-Rod (STD)
80	98-9519	3	Bearing-Rod (-0.2Mm)
80	117-7588	3	Metal-Crankpin (-0.4Mm)
90	130-1375	1	Crankshaft ASM
100	117-7561	1	Gear-Crankshaft

Ref.	Part Number	Qty.	Description
110	98-9666	1	Key
120	127-0445	1	Gear-Drive, Oil Pump
130	98-9522	1	Sleeve-Crankshaft
140	127-0444	1	Collar-Crankshaft
150	105-3783	1	O-Ring
160	112-7005	1	Bearing-Main (STD)
160	98-9528	1	Bearing-Main (-0.2Mm)
160	127-0432	1	Metal-Crankshaft (-0.4Mm)
170	98-9413	2	Bearing-Thrust (STD)
170	127-0416	2	Metal-Side (+0.2Mm)
170	127-0417	2	Metal-Side (+0.40Mm)
180	98-9688	2	Bearing-Thrust (STD)
180	127-0437	2	Metal-Side (+0.2Mm)
180	127-0438	2	Metal-Side (+0.40Mm)

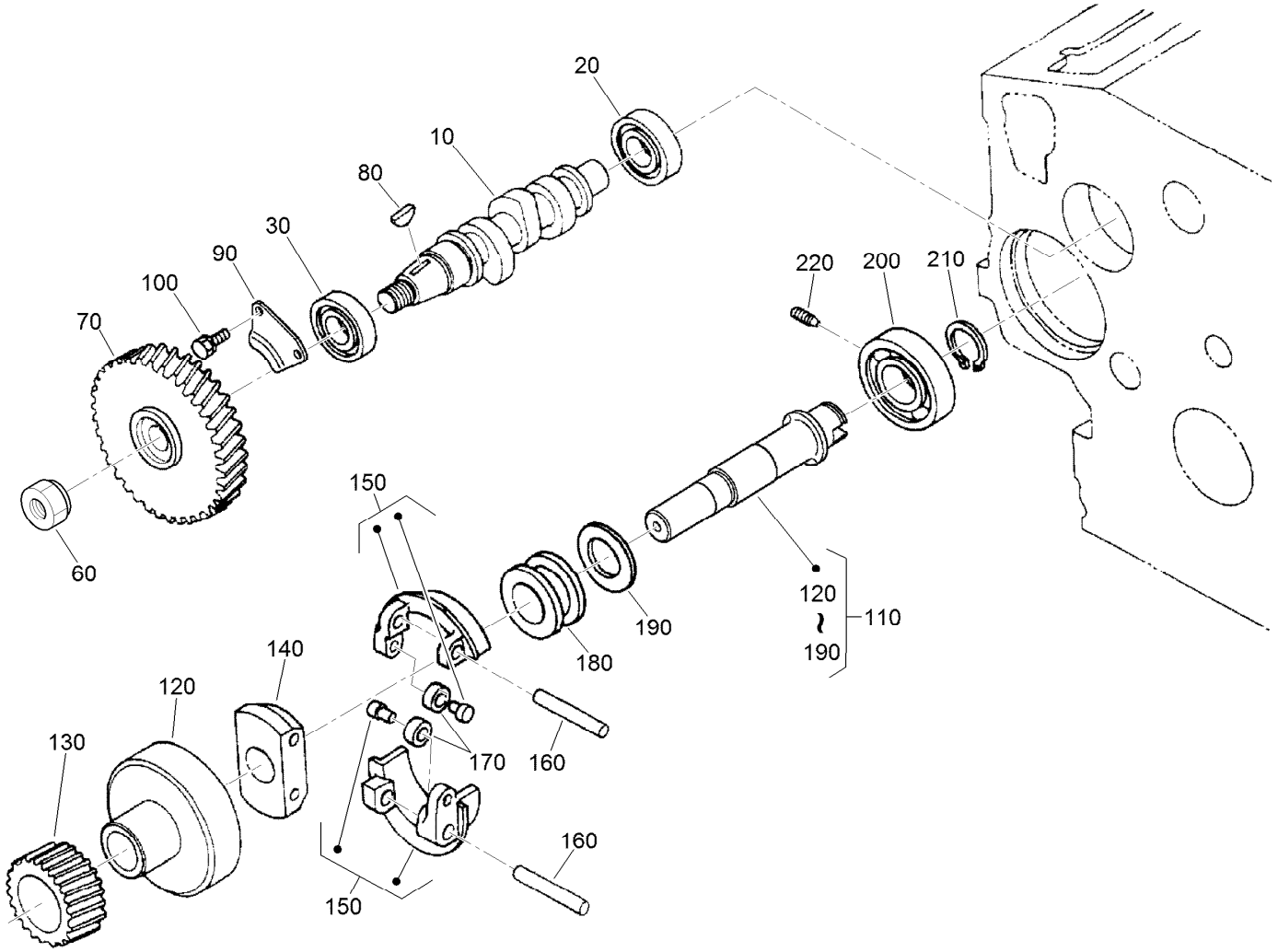

Fuel Camshaft and Governor Shaft Assembly

Ref.	Part Number	Qty.	Description
10	98-9459	1	Camshaft-Fuel
20	107-9077	1	Bearing-Ball
30	107-9078	1	Bearing-Ball
60	130-1512	1	Nut
70	120-2562	1	Gear-Pump, Injection
80	98-9595	1	Key-Woodruff
90	98-9511	1	Stopper-Fuel, Camshaft
100	98-7692	2	Bolt
110	98-9644	1	Governor Shaft ASM
120	98-9562	1	Holder-Gear, Governor

Ref.	Part Number	Qty.	Description
130	98-9673	1	Gear-Governor
140	98-9561	1	Holder-Weight, Governor
150	130-1240	2	Governor Weight ASM
160	98-9560	2	Shaft-Weight, Governor
170	98-9692	2	Roller
180	98-9563	1	Sleeve-Governor
190	98-9564	1	Washer-Thrust
200	107-9079	1	Bearing-Ball
210	98-9657	1	Circlip-Shaft, Governor
220	98-9565	1	Screw-Set

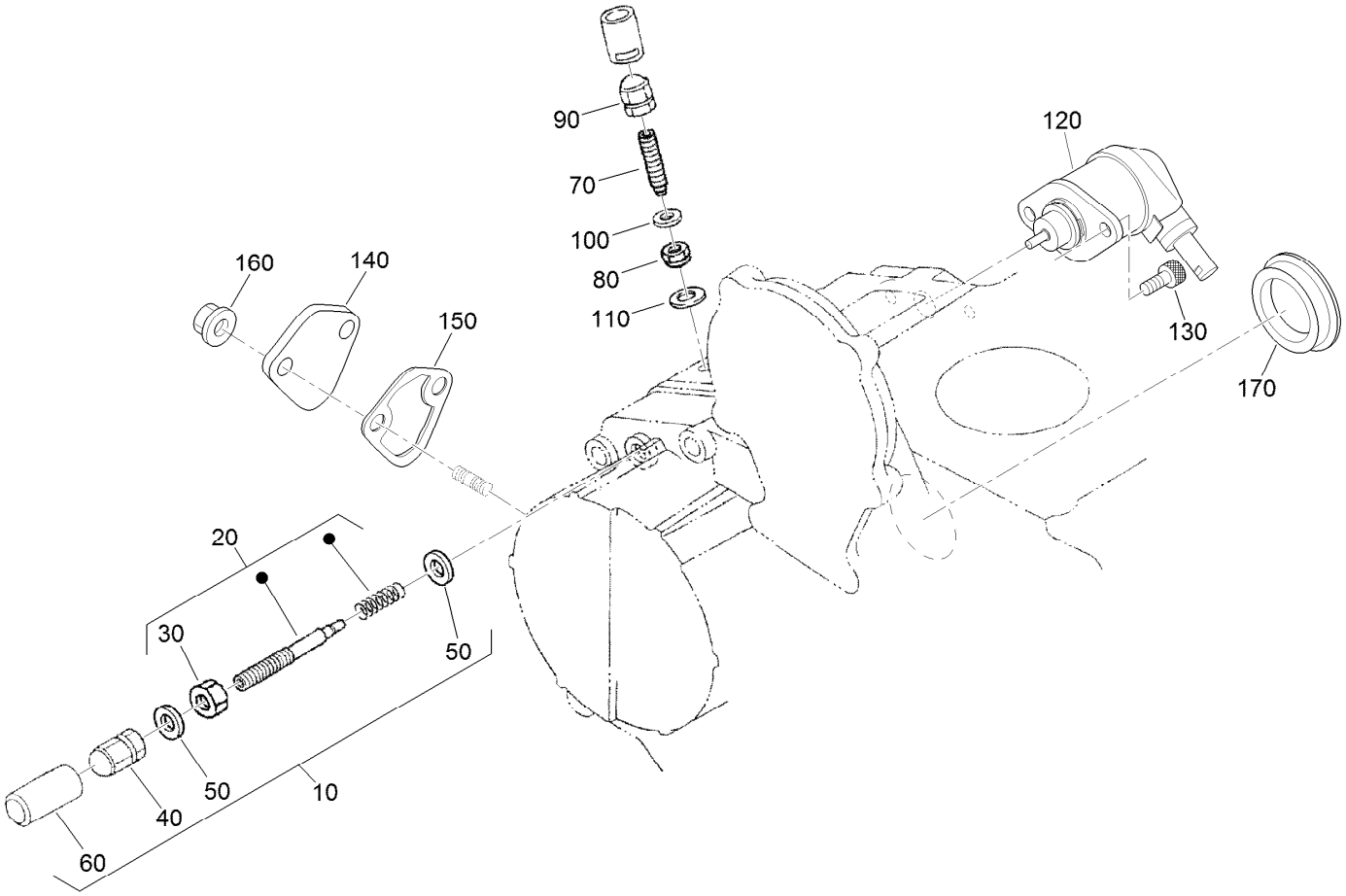

Idle Apparatus Assembly

Ref.	Part Number	Qty.	Description
10	98-9678	1	Idle Apparatus ASM
20	112-7014	1	Adjusting Bolt ASM
30	98-9439	1	Nut
40	112-0181	1	Nut
50	98-7654	2	Gasket
60	98-7656	1	Cap
70	112-7015	1	Bolt-Adjusting
80	100-2175	1	Nut-Lock
90	112-0181	1	Nut

Ref.	Part Number	Qty.	Description
100	98-7654	1	Gasket
110	107-9081	1	Gasket
120	104-5155	1	Solenoid-Stop
130	130-1155	2	Screw-HSH
140	99-3514	1	Cover
150	117-7562	1	Gasket-Pump, Fuel
160	100-2203	2	Nut-Flange
170	112-7016	1	Cover-Pump

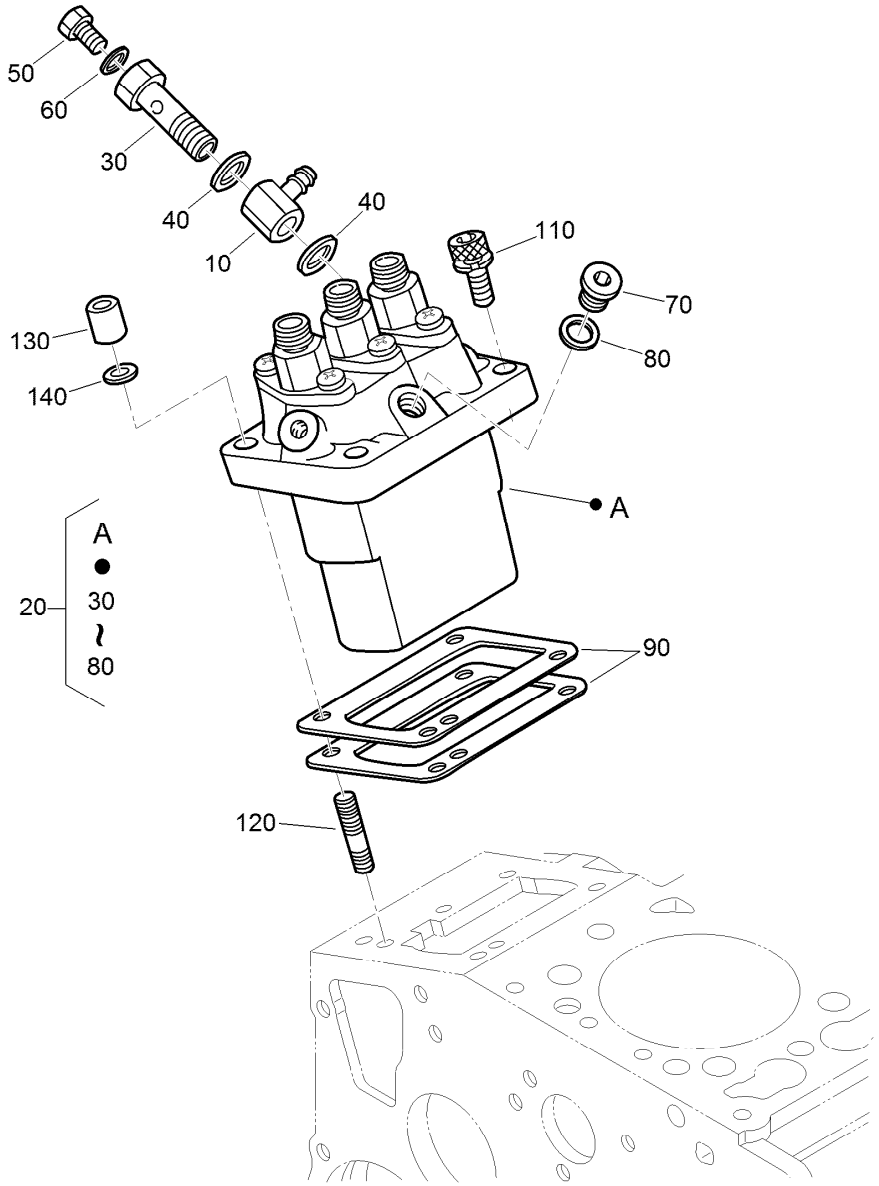

Injection Pump Assembly

Ref.	Part Number	Qty.	Description
10	98-9596	1	Joint-Eye
20	98-9643	1	Injection Pump ASM
30	98-9464	1	Bolt-Joint
40	98-9445	2	Gasket
50	98-9430	1	Screw
60	98-9446	1	Gasket
70	98-9466	1	Plug
80	98-9451	1	Gasket
90	98-9456	1	Shim-Injection (0.20Mm)

Ref.	Part Number	Qty.	Description
90	98-9457	1	Shim-Injection (0.25Mm)
90	98-9458	1	Shim-Injection (0.30Mm)
90	115-3046	1	Shim-Injection (0.35Mm)
90	115-3045	1	Shim-Injection (0.175Mm)
110	117-7564	2	Bolt-Hex Soc HD
120	98-9438	2	Stud
130	98-9440	2	Nut-Cap
140	98-7699	2	Washer-Spring

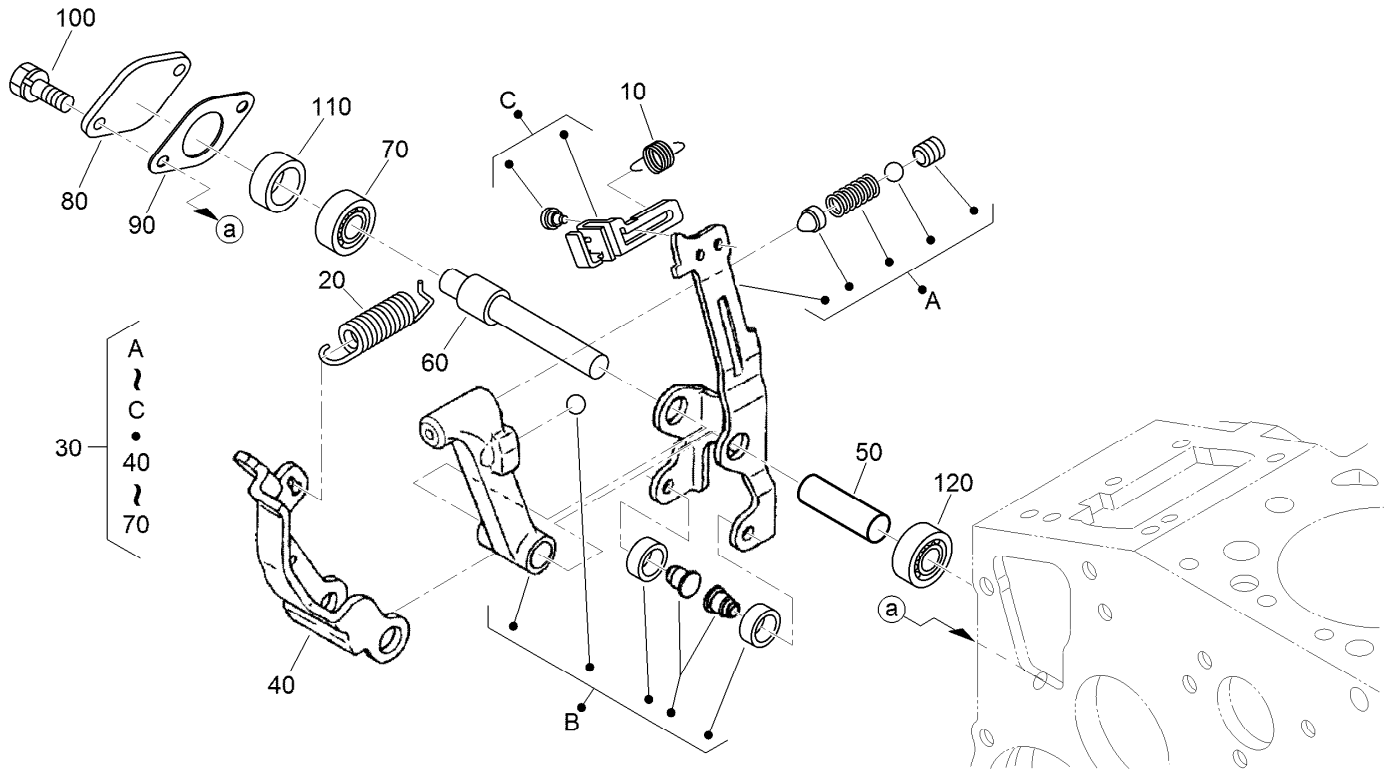

Governor Assembly

Ref.	Part Number	Qty.	Description
10	105-3786	1	Spring-Start
20	98-9681	1	Spring-Governor
30	115-4502	1	Fork Lever ASM
40	107-9084	1	Lever-Fork
50	107-9085	1	Shaft-Lever, Fork
60	107-9086	1	Shaft-Lever, Fork
70	98-9570	1	Bearing-Miniaturize
80	115-4122	1	Cover-Shaft, Fork Lever
90	98-9682	1	Gasket
100	98-9350	2	Bolt
110	98-9567	1	Collar
120	98-9571	1	Bearing-Miniaturize

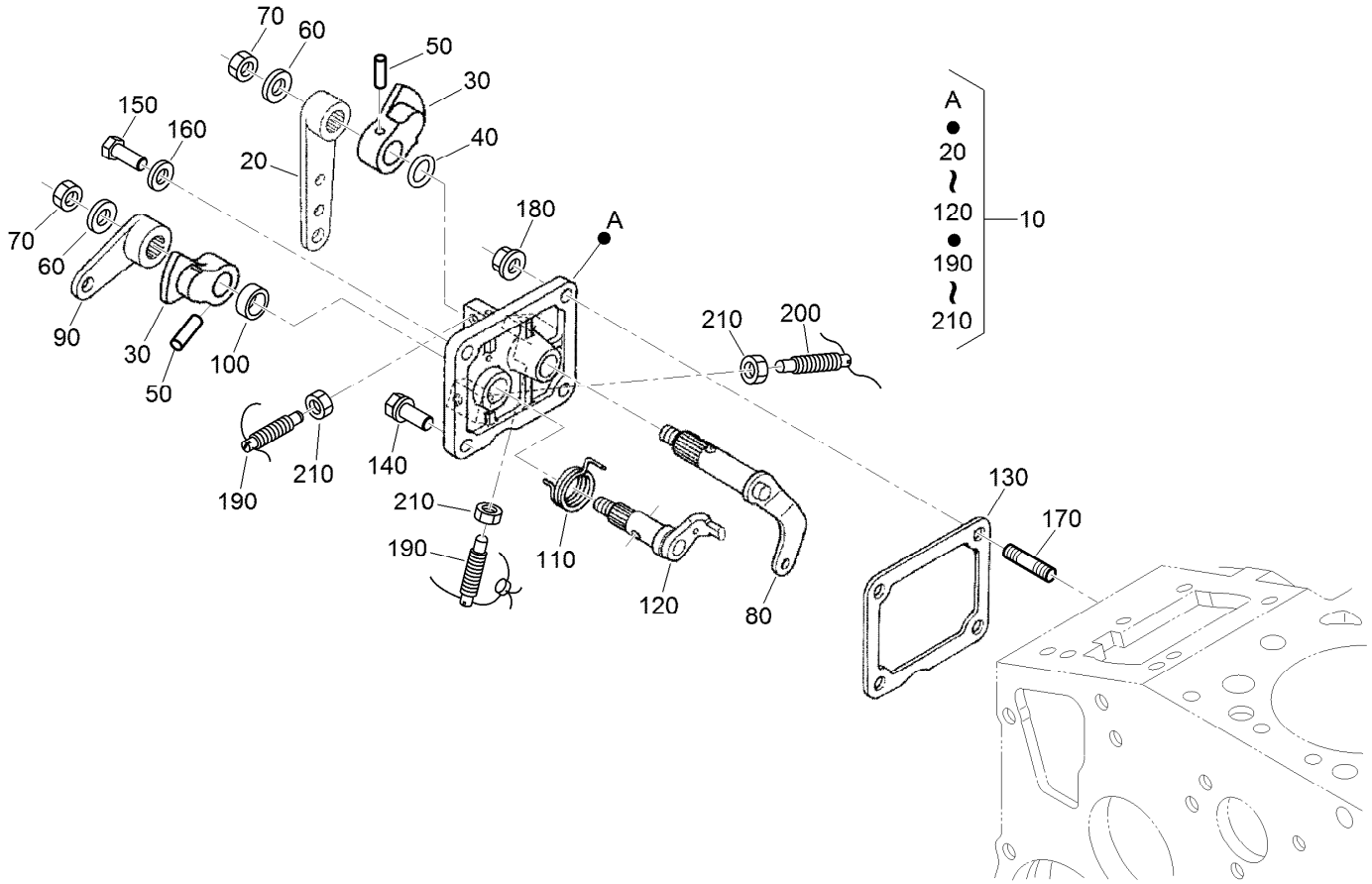

Speed Control Plate Assembly

Ref.	Part Number	Qty.	Description
10	105-3735	1	Control Plate ASM
20	98-9662	1	Lever-Control, Speed
30	98-9572	2	Lever-Control, Speed
40	105-3788	1	O-Ring
50	98-7602	2	Pin-Spring
60	98-9594	2	Washer-Plain
70	98-9589	2	Nut
80	98-9658	1	Governor Lever ASM
90	98-9663	1	Lever-Stop, Engine
100	98-7601	1	Seal-Oil
110	98-9472	1	Spring-Return

Ref.	Part Number	Qty.	Description
120	98-9664	1	Shaft-Lever, Stop
130	98-9637	1	Gasket
140	98-7692	1	Bolt
150	127-0401	1	Bolt-Hex
160	98-7654	1	Gasket
170	105-3710	2	Stud
180	100-2203	2	Nut-Flange
190	117-7565	2	Bolt-Adjusting
200	117-7566	1	Bolt-Adjusting
210	98-7572	3	Nut

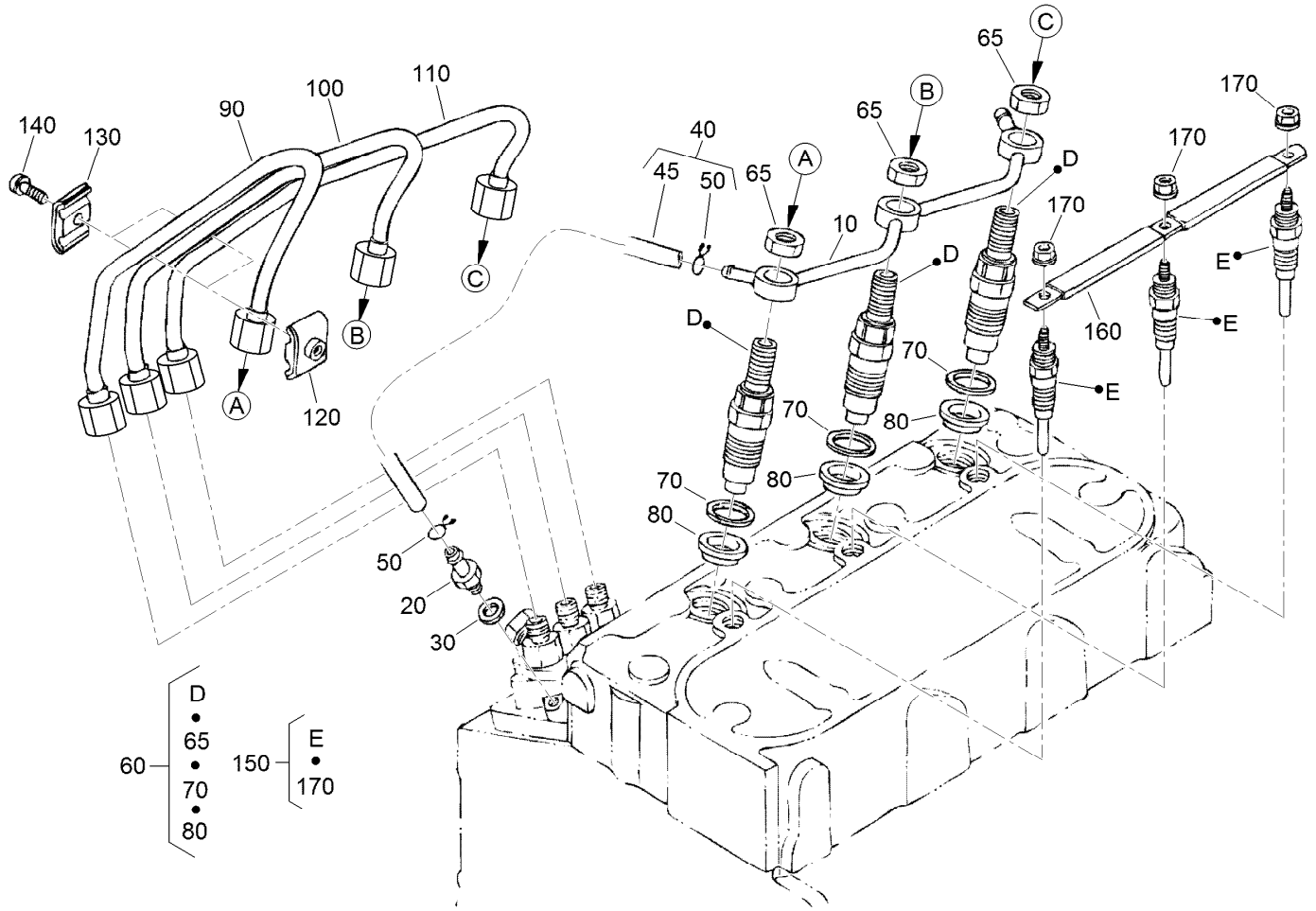

Nozzle Holder and Glow Plug Assembly

Ref.	Part Number	Qty.	Description
10	98-9620	1	Overflow Pipe ASM
20	98-9431	1	Screw-Bleeder, Air
30	98-7654	1	Gasket
40	98-9420	1	Overflow Pipe ASM
45	112-0182	1	Pipe-Overflow
50	98-7671	2	Clip-Pipe
60	115-3018	3	Nozzle Holder Kit
65	121-2411	3	Nut
70	98-7676	3	Gasket
80	98-7677	3	Seal-Heat

Ref.	Part Number	Qty.	Description
90	98-9653	1	Pipe-Injection
100	98-9654	1	Pipe-Injection
110	98-9655	1	Pipe-Injection
120	98-7682	2	Clamp-Pipe
130	98-7683	2	Clamp-Pipe
140	98-7684	2	Screw (W/Washer)
150	130-1411	3	Plug-Glow
160	98-9631	1	Cord-Plug, Glow
170	99-8377	3	Nut-Flange

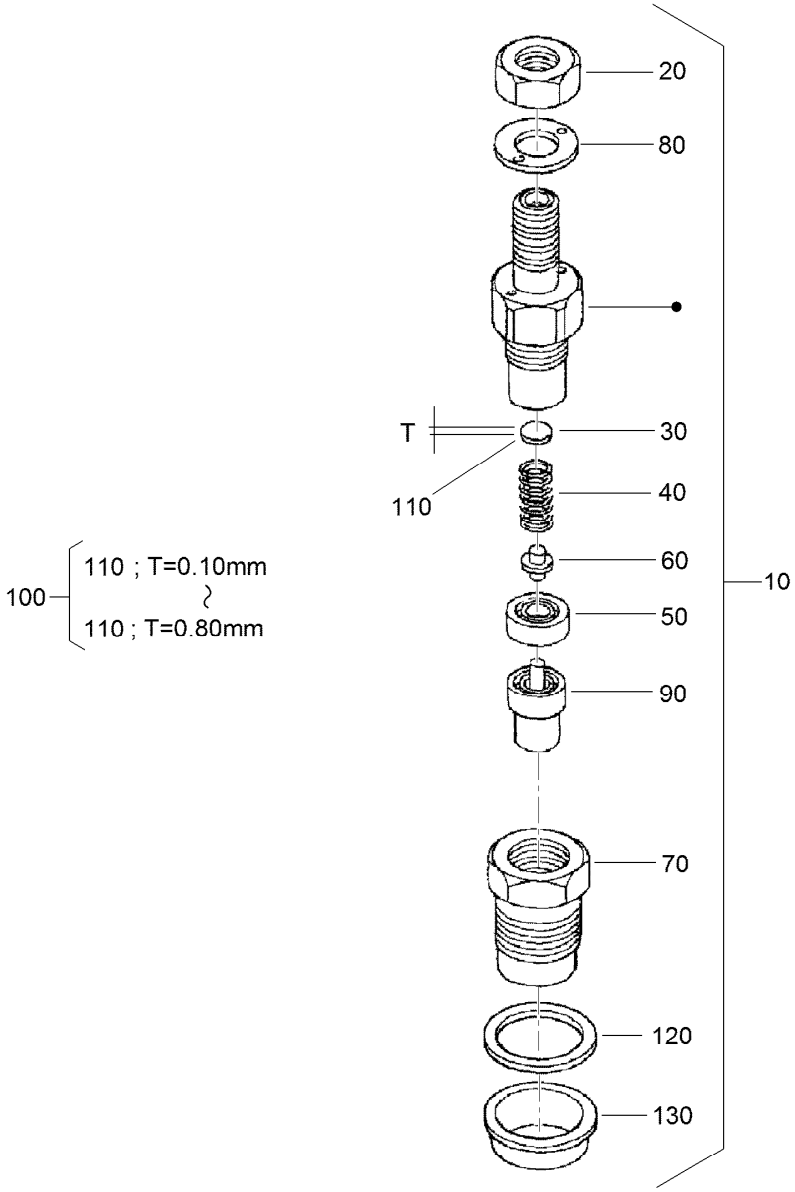

Nozzle Holder Assembly

Ref.	Part Number	Qty.	Description
10	115-3018	3	Nozzle Holder Kit
20	121-2411	3	Nut
30	99-8302	3	Washer-Adjusting
40	99-8303	3	Spring-Nozzle
50	99-8304	3	Spacer-Distance
60	99-8305	3	Rod-Push
70	99-8306	3	Nut-Nozzle
80	99-8307	3	Washer-Plain
90	115-3020	3	Piece-Nozzle
100	99-8309	3	Adjusting Washer ASM
110	99-8310	3	Washer-Adjust (0.10Mm)

Ref.	Part Number	Qty.	Description
110	99-8311	3	Washer-Adjust (0.20Mm)
110	99-8312	3	Washer-Adjust (0.30Mm)
110	99-8313	3	Washer-Adjust (0.40Mm)
110	99-8314	3	Washer-Adjust (0.50Mm)
110	99-8315	3	Washer-Adjust (0.52Mm)
110	99-8316	3	Washer-Adjust (0.54Mm)
110	99-8317	3	Washer-Adjust (0.56Mm)
110	99-8318	3	Washer-Adjust (0.58Mm)
110	99-8319	3	Washer-Adjust (0.80Mm)
120	98-7676	3	Gasket
130	98-7677	3	Seal-Heat

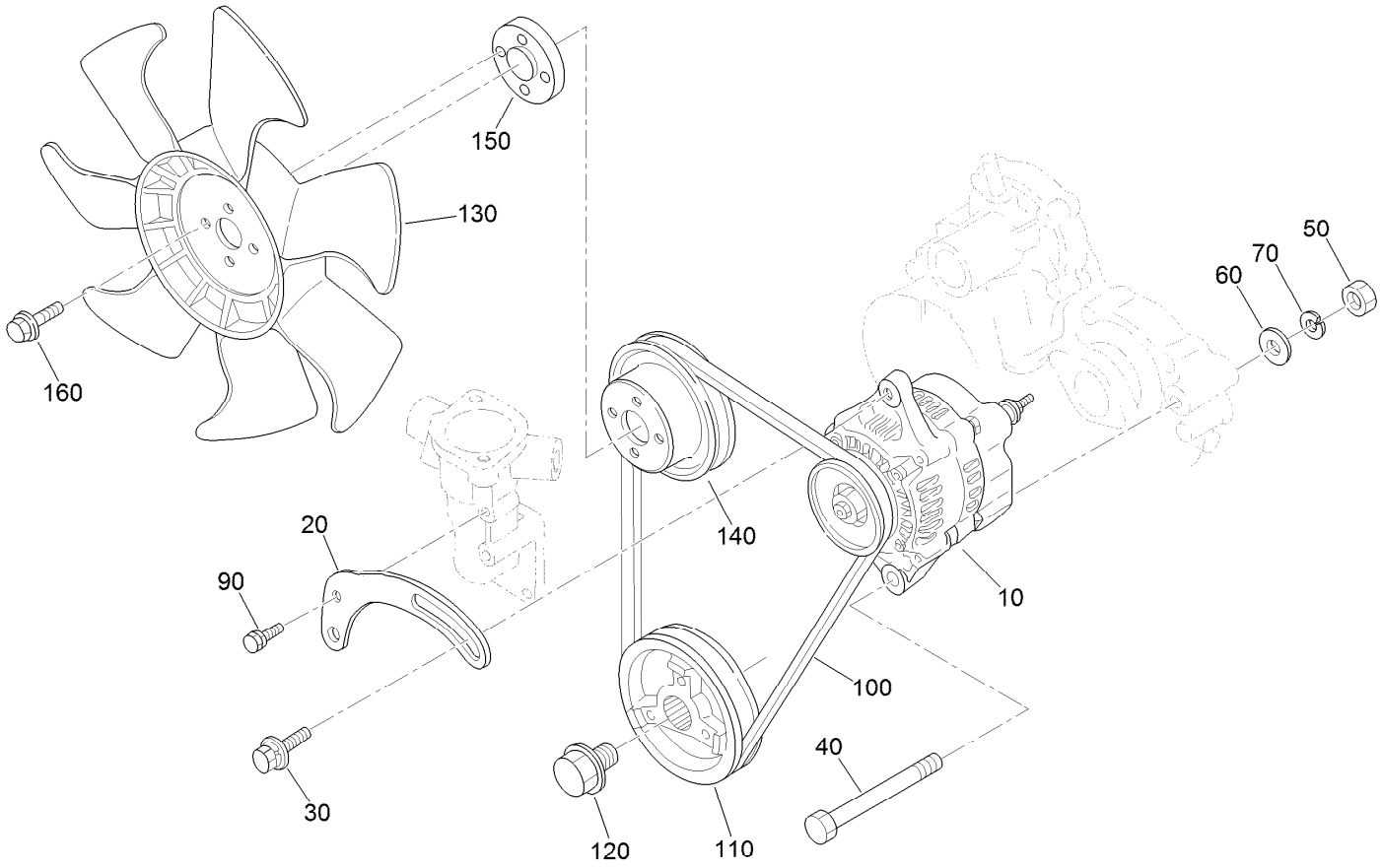

Alternator, Pulley and Fan Assembly

Ref.	Part Number	Qty.	Description
10	131-6557	1	Alternator ASM
20	112-7047	1	Stay-Dynamo
30	108-7088	1	Bolt
40	98-9360	1	Bolt
50	98-7737	1	Nut
60	98-9366	1	Washer-Plain
70	98-7738	1	Washer-Spring
90	98-7692	1	Bolt
100	98-9676	1	V-Belt
110	98-9473	1	Pulley-Drive, Fan
120	98-9585	1	Bolt
130	104-4246	1	Fan-Engine
140	110-0972	1	Pulley
150	108-2872	1	Collar-Fan
160	108-2873	4	Bolt-Flange

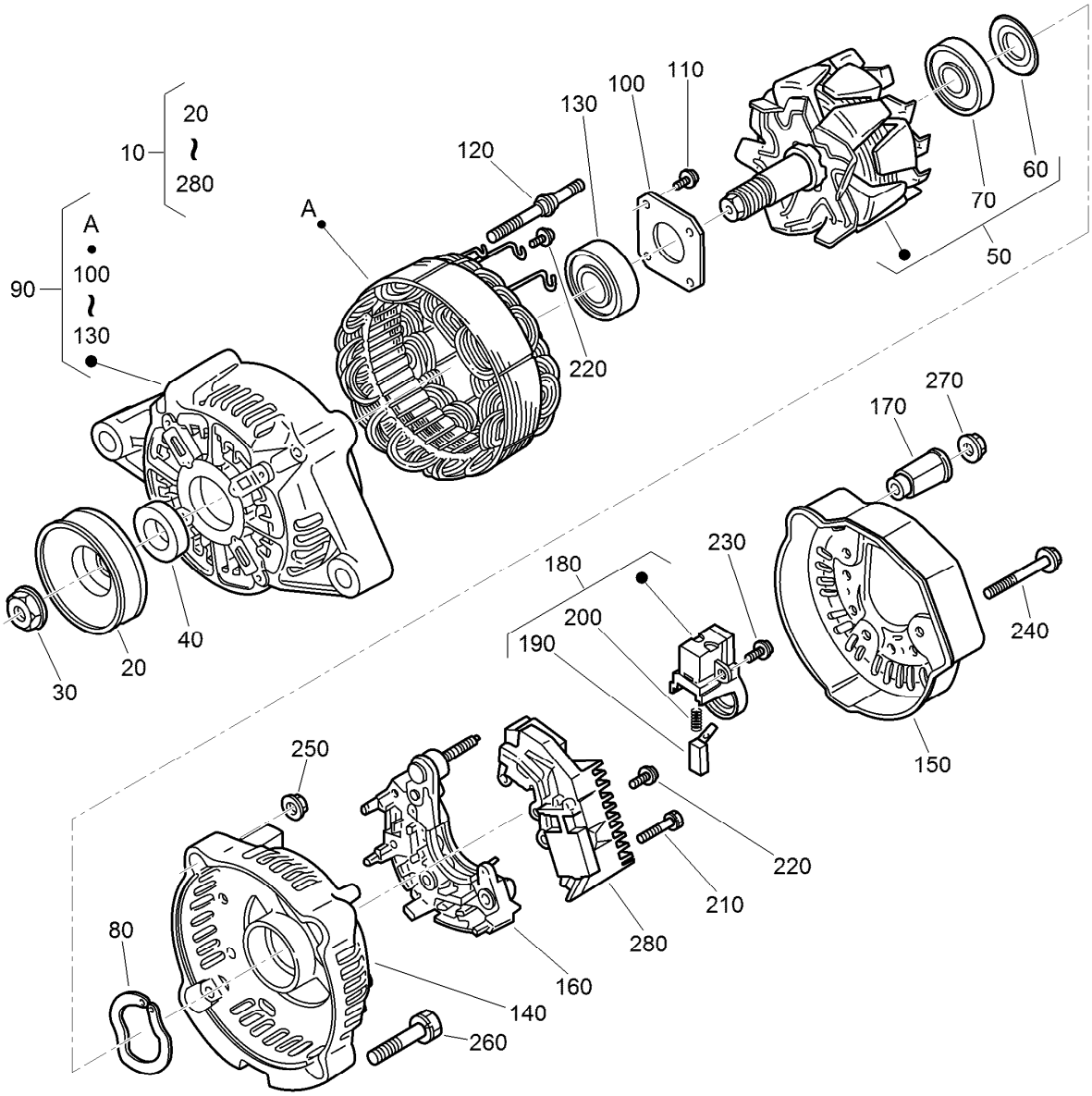

Alternator Components Assembly

Ref.	Part Number	Qty.	Description
10	131-6557	1	Alternator ASM
20	98-9453	1	Pulley-Dynamo
30	98-7708	1	Nut
40	98-7709	1	Collar
50	107-0136	1	Rotor ASM
60	98-7711	1	Cover-Bearing
70	107-0138	1	Bearing-Ball
80	98-7713	1	Washer-Thrust
90	107-0139	1	Drive End Frame ASM
100	98-7715	1	Plate-Retainer
110	98-7716	4	Screw-Head, Round
120	98-7717	2	Bolt-Through
130	133-2811	1	Bearing
140	107-9087	1	Frame-End

Ref.	Part Number	Qty.	Description
150	107-0140	1	Cover-End
160	127-1612	1	Rectifier ASM
170	98-7722	1	Bushing-Insulation
180	107-0141	1	Brush Holder ASM
190	98-7724	2	Brush
200	98-7725	2	Spring-Brush
210	98-7726	2	Screw-Head, Round
220	98-7727	6	Screw-Head, Round
230	98-7728	1	Screw-Head, Round
240	98-7729	3	Bolt
250	98-7730	2	Nut
260	98-7731	2	Bolt
270	98-7732	1	Nut
280	110-3799	1	Regulator ASM

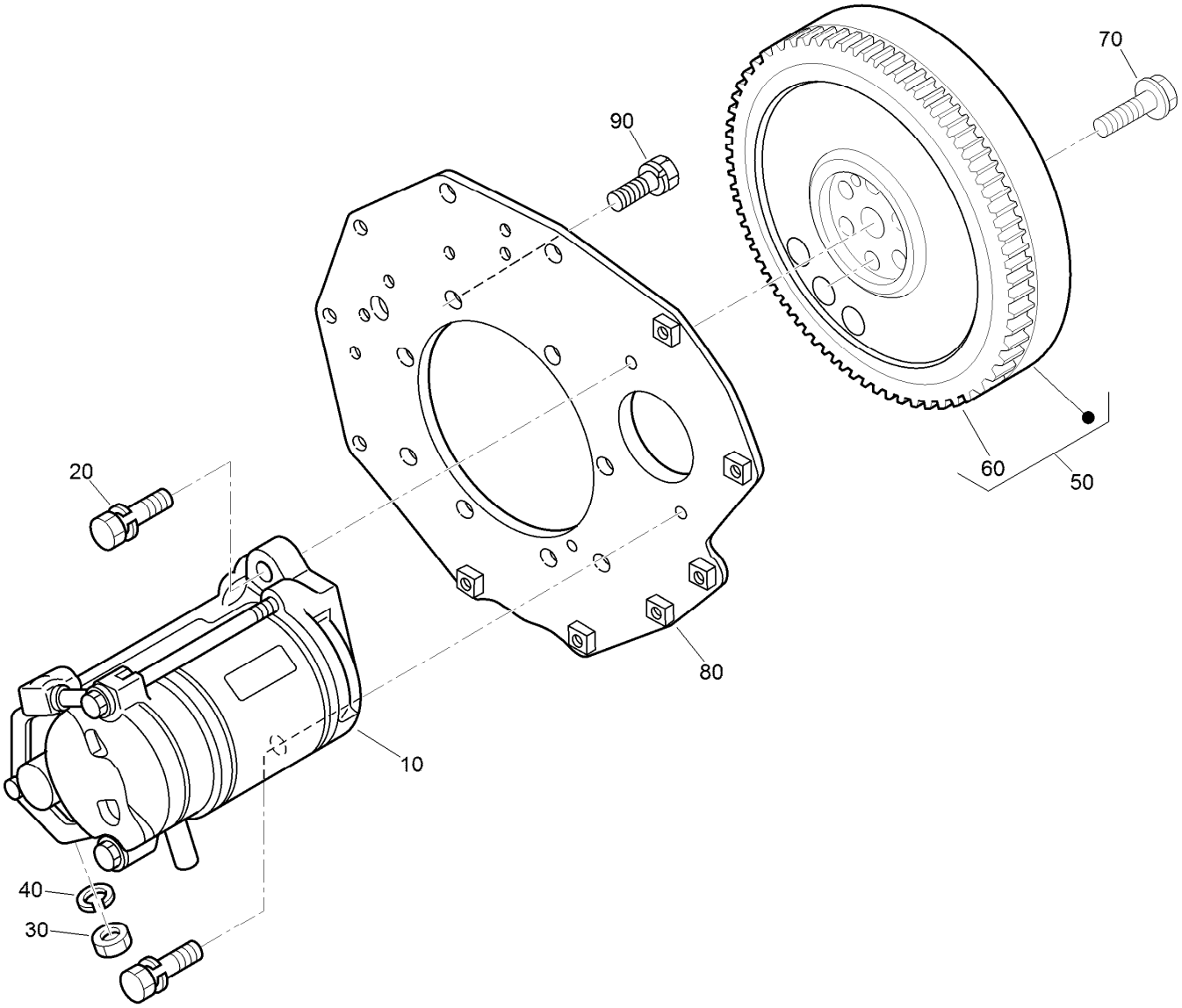

Starter and Flywheel Assembly

Ref.	*Part Number*	*Qty.*	*Description*
10	98-9705	1	Starter ASM
20	98-7697	2	Bolt
30	98-7739	1	Nut
40	105-2893	1	Washer-Spring
50	105-3784	1	Flywheel ASM
60	115-3015	1	Gear-Ring
70	98-9537	6	Bolt-Flywheel
80	98-9486	1	Plate-End, Rear
90	98-9392	8	Bolt

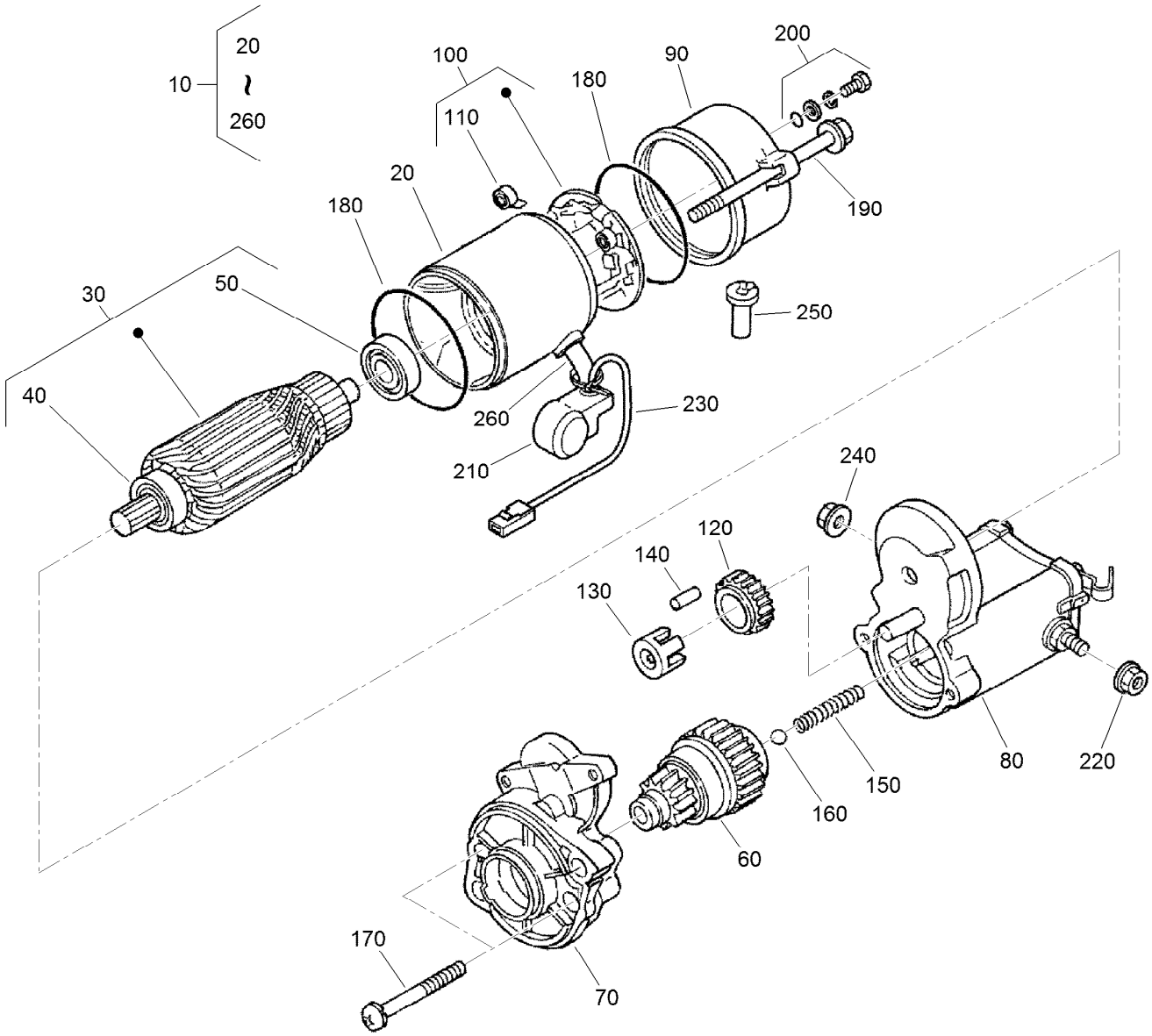

Starter Component Assembly

Ref.	Part Number	Qty.	Description
10	98-9705	1	Starter ASM
20	104-8608	1	Yoke ASM
30	98-7742	1	Armature ASM
40	98-7744	1	Bearing
50	98-7743	1	Bearing
60	99-8373	1	Clutch-Running, Over
70	99-8374	1	Frame-End, Drive
80	105-3746	1	Magnetic Switch ASM
90	98-7748	1	Frame-End
100	98-7749	1	Brush Holder ASM
110	98-7750	4	Spring-Brush
120	98-7751	1	Gear
130	98-7752	1	Retainer

Ref.	Part Number	Qty.	Description
140	98-7753	5	Roller
150	98-7754	1	Spring
160	98-7755	1	Ball
170	98-7756	2	Bolt
180	98-7757	2	O-Ring
190	100-9240	2	Bolt
200	98-7758	2	Bolt ASM
210	99-8375	1	Cover
220	99-8371	1	Nut-Hex
230	98-9711	1	Cord-Solenoid, Stop
240	99-8376	1	Nut-Hex
250	98-7759	1	Pipe-Drain
260	98-9712	1	Band-Cover

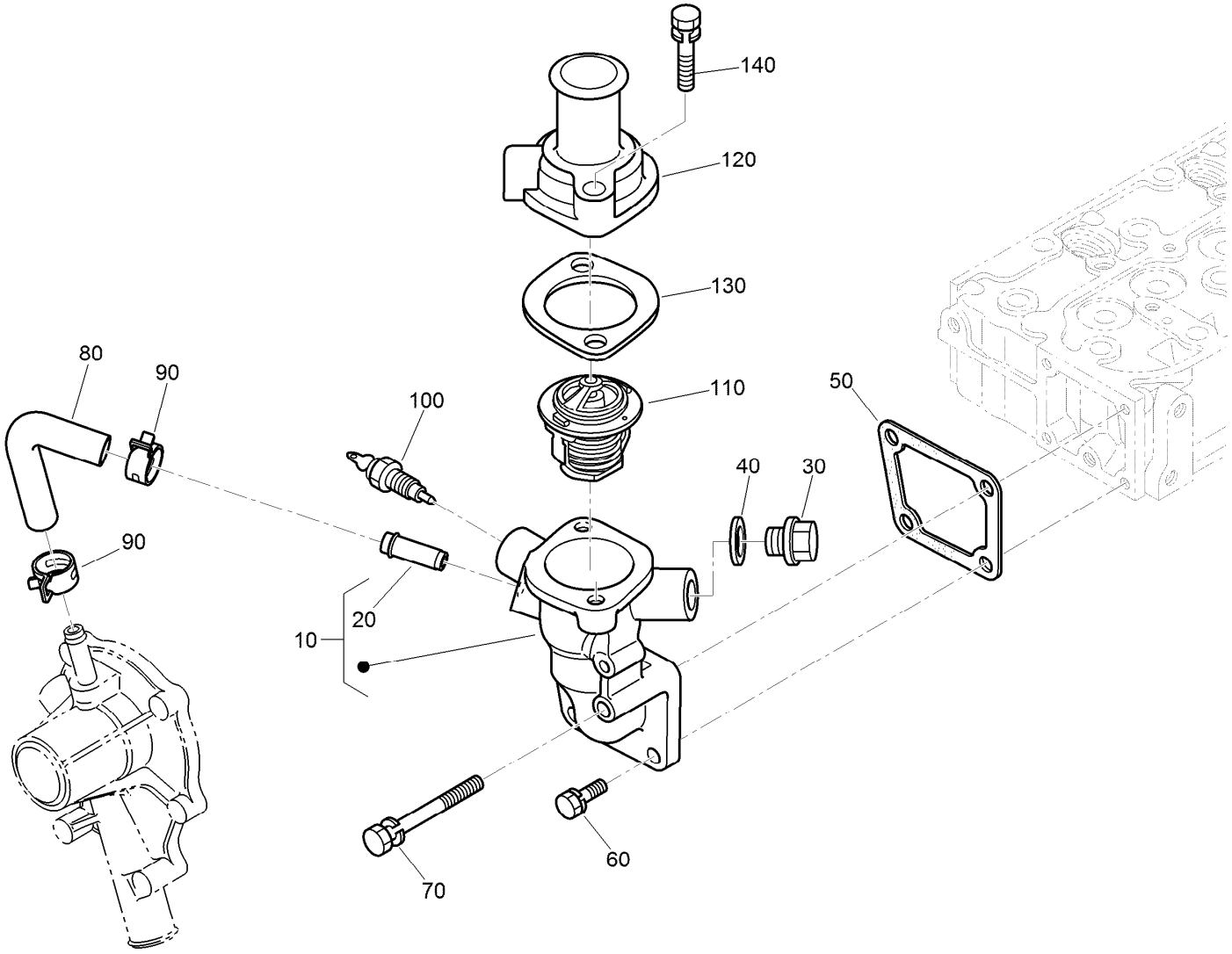

Water Flange and Thermostat Assembly

Ref.	Part Number	Qty.	Description
10	98-9713	1	Water Flange ASM
20	98-9580	1	Pipe-Return, Water
30	105-3747	1	Plug
40	99-3583	1	Gasket
50	98-9638	1	Gasket-Flange, Water
60	98-7692	3	Bolt
70	98-9356	1	Bolt
80	98-9578	1	Pipe-Return, Water
90	125-9078	2	Clamp-Hose
100	112-0183	1	Switch-Thermometer
110	98-7778	1	Thermostat ASM
120	98-9471	1	Cover-Thermostat
130	105-3748	1	Gasket-Thermostat
140	98-7777	2	Bolt

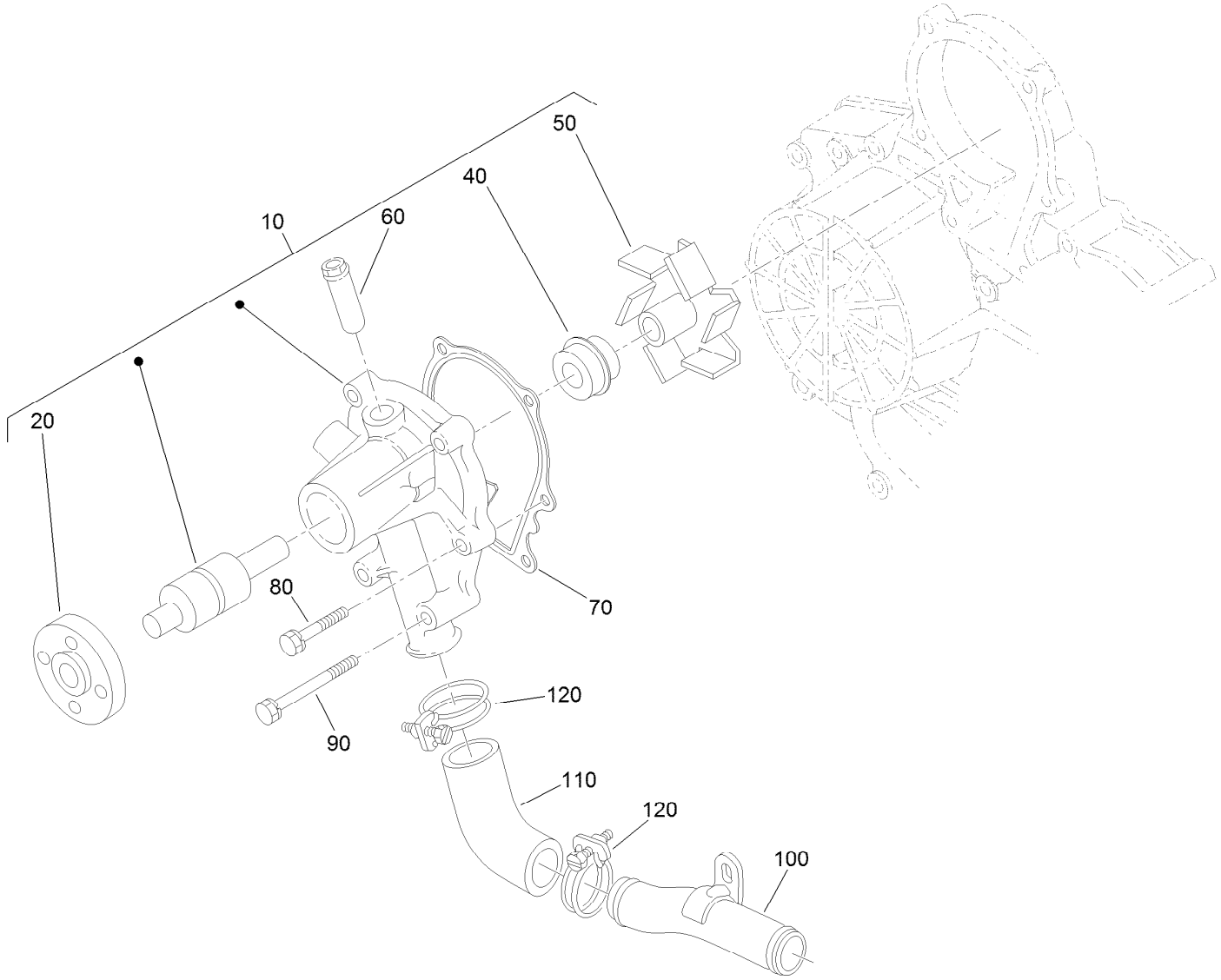

Water Pump Assembly

Ref.	Part Number	Qty.	Description
10	107-9089	1	Water Pump ASM
20	99-3516	1	Flange-Pump, Water
40	105-3750	1	Mechanical Seal ASM
50	112-7017	1	Impeller-Pump, Water
60	100-1932	1	Pipe-Return, Water
70	99-3454	1	Gasket-Pump, Water
80	98-9353	4	Bolt
90	107-9090	2	Bolt
100	98-9716	1	Pipe-Water
110	107-9091	1	Pipe-Water
120	127-0439	2	Clamp-Hose

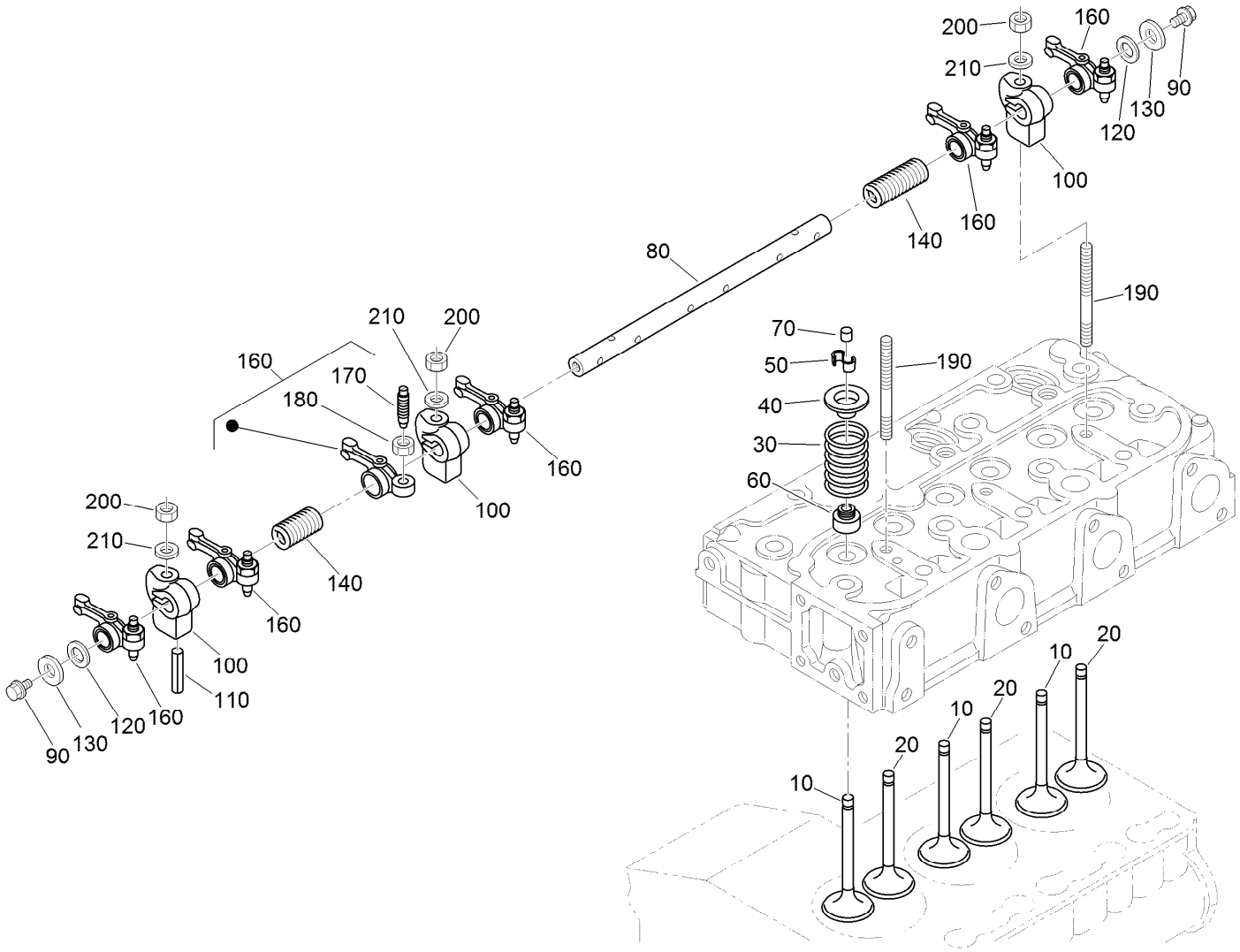

Valve and Rocker Arm Assembly

Ref.	Part Number	Qty.	Description
10	112-7018	3	Valve-Inlet
20	120-2564	3	Valve-Exhaust
30	98-9648	6	Spring-Valve
40	107-9092	6	Retainer-Spring
50	117-7572	6	Collet-Spring, Valve
60	99-8385	6	Seal-Stem, Valve
70	98-9497	6	Cap-Valve
80	130-1248	1	Shaft-Arm, Rocker
90	99-8363	2	Bolt-Flange
100	98-9505	3	Bracket-Arm, Rocker

Ref.	Part Number	Qty.	Description
110	105-3758	1	Pin-Spring
120	98-9507	2	Washer-Shaft, Rocker Arm
130	110-3832	2	Washer-Plain
140	98-9504	2	Spring-Arm, Rocker
160	112-7020	6	Rocker Arm ASM
170	98-9502	6	Screw-Adjusting
180	98-9503	6	Nut
190	98-9506	3	Stud
200	98-9393	3	Nut
210	98-9385	3	Washer-Flat

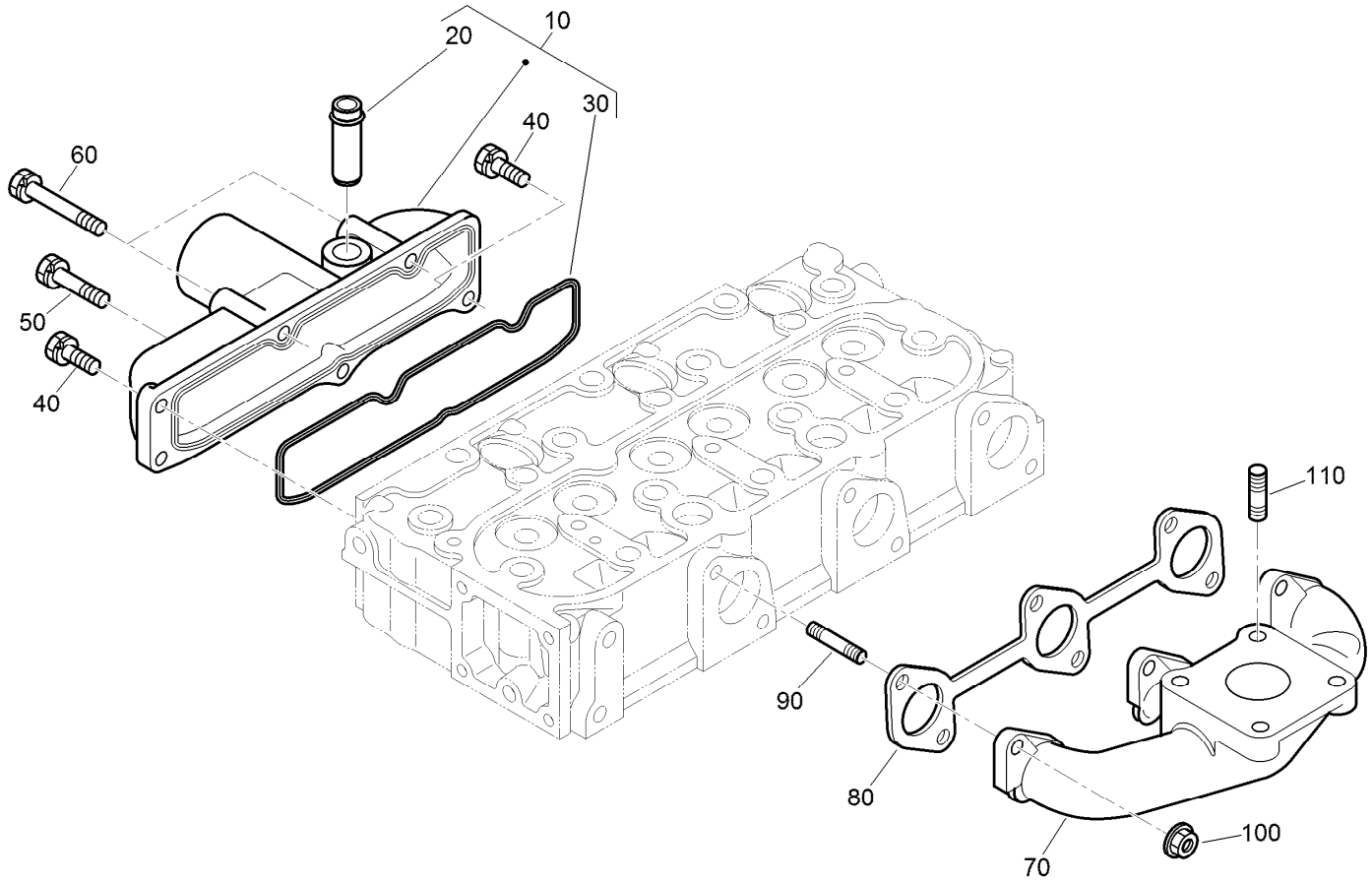

Inlet and Exhaust Manifold Assembly

Ref.	*Part Number*	*Qty.*	*Description*
10	108-6577	1	Inlet Manifold ASM
20	98-9492	1	Joint-Pipe, Breather
30	98-9609	1	Gasket-Manifold, Inlet
40	127-0403	3	Bolt-Flange
50	98-9353	1	Bolt
60	125-9063	2	Bolt-Sems
70	107-9093	1	Manifold-Exhaust
80	99-8327	1	Gasket-Manifold, Exhaust
90	98-9588	6	Stud
100	98-9665	6	Nut
110	98-7769	4	Stud

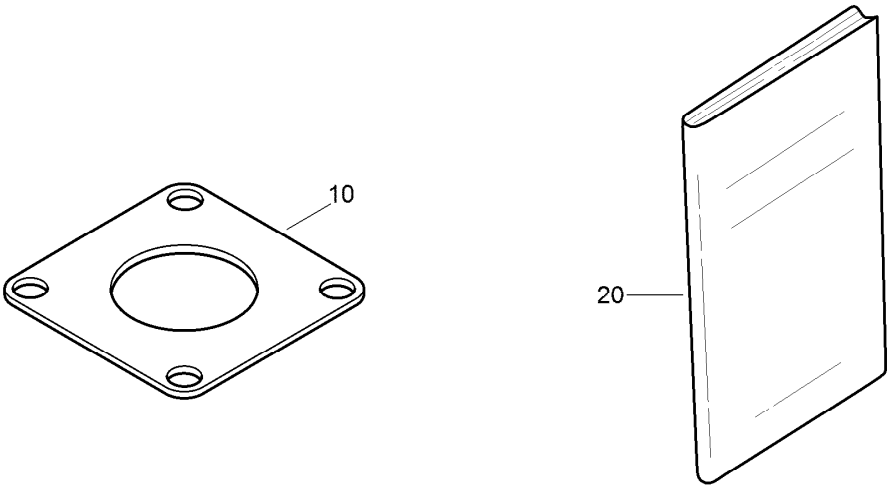

Miscellaneous Engine Parts

Ref.	*Part Number*	*Qty.*	*Description*
10	99-8343	1	Gasket-Muffler
20	130-1543	1	Manual-Operator

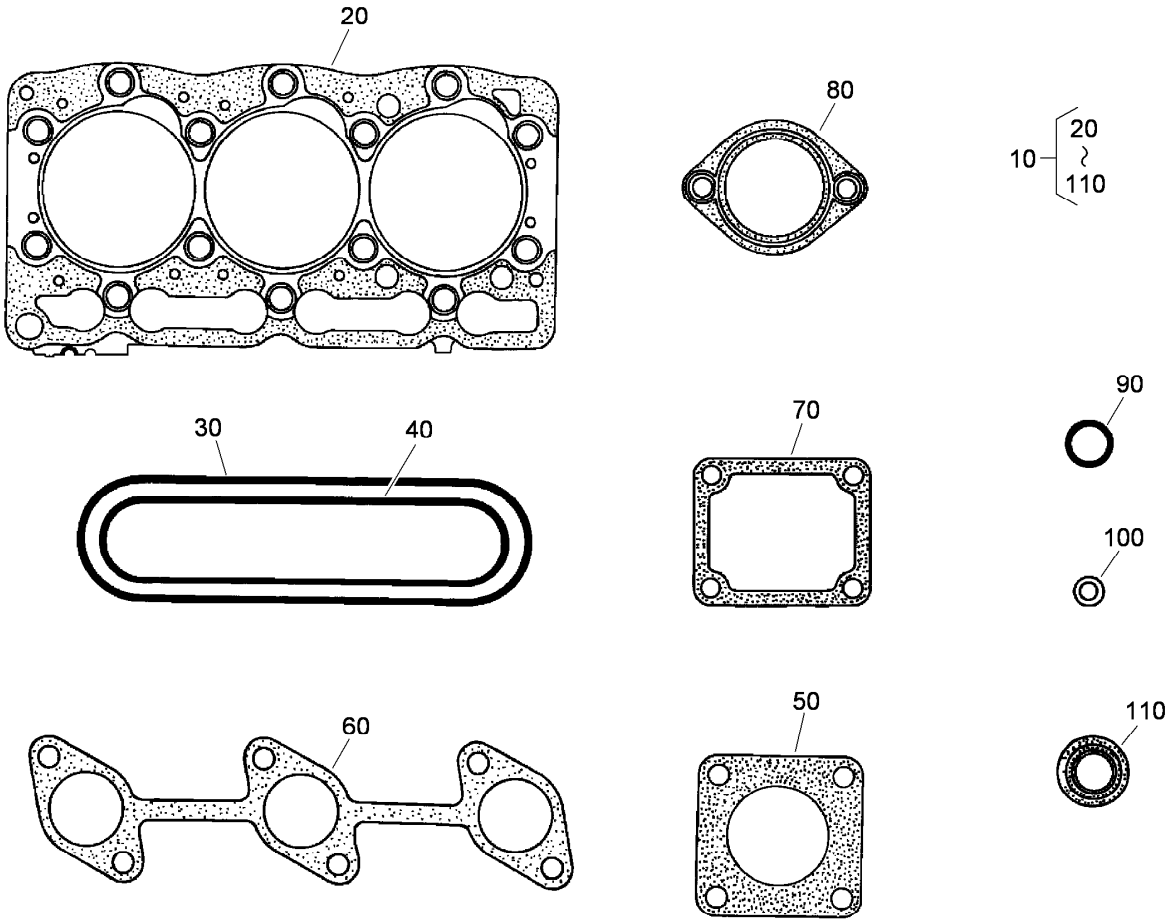

Upper Gasket Kit

Ref.	*Part Number*	*Qty.*	*Description*
10	107-7848	1	Upper Gasket Kit
20	108-6573	1	Gasket-Head, Cylinder
30	98-9615	1	Gasket-Cover, Head
40	98-9609	1	Gasket-Manifold, Inlet
50	99-8343	1	Gasket-Muffler
60	99-8327	1	Gasket-Manifold, Exhaust
70	98-9638	1	Gasket-Flange, Water
80	105-3748	1	Gasket-Thermostat
90	99-3446	2	O-Ring
100	98-9454	3	Gasket
110	99-8385	6	Seal-Stem, Valve

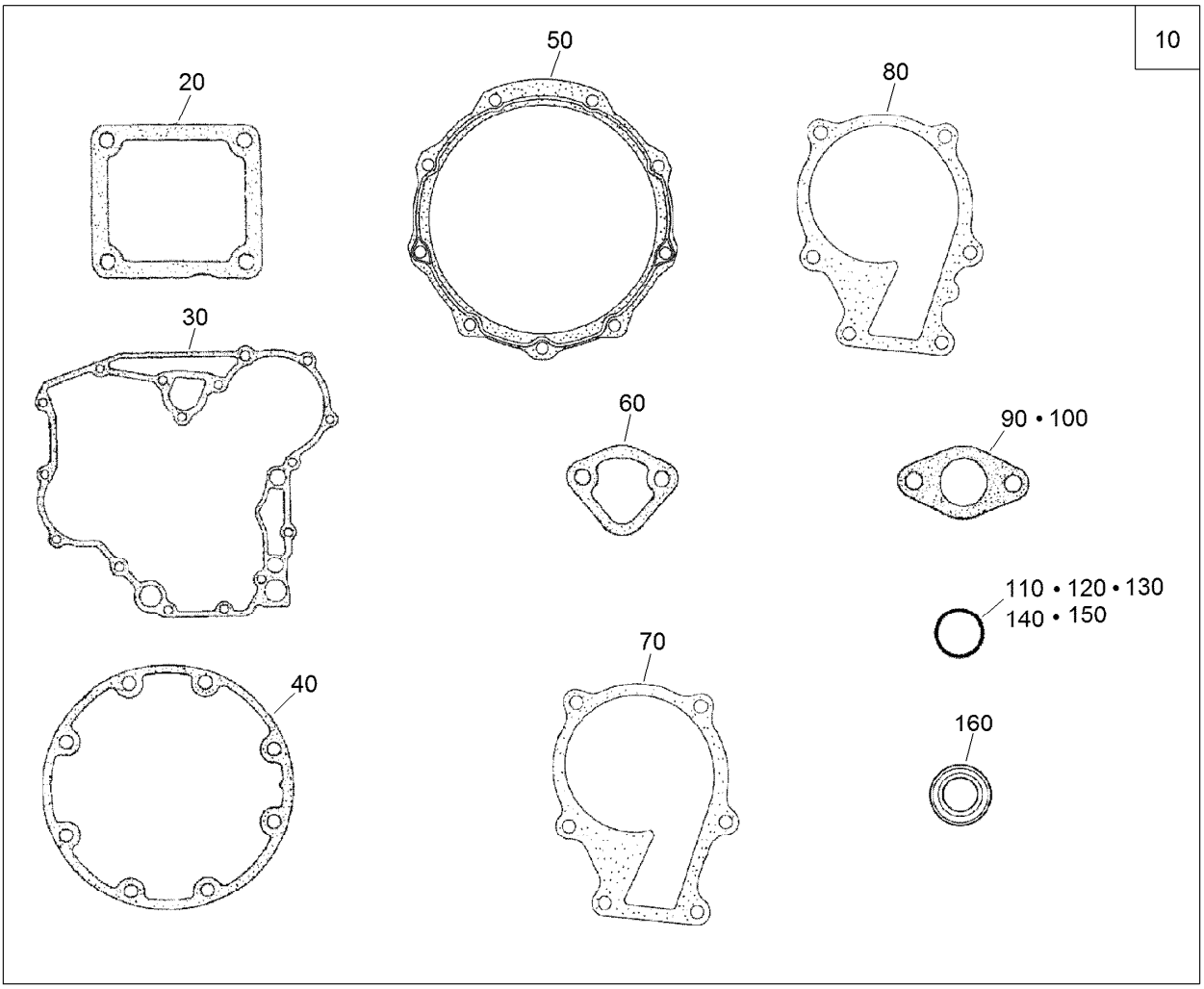

Lower Engine Gasket Kit

Ref.	Part Number	Qty.	Description
10	130-1364	1	Lower Gasket Kit
20	98-9637	1	Gasket
30	98-9633	1	Gasket-Case, Gear
40	131-6554	1	Gasket-Case, Bearing
50	112-7037	1	Gasket-Cover, Case
60	117-7562	1	Gasket-Pump, Fuel
70	98-9632	1	Gasket-Pump, Water
80	99-3454	1	Gasket-Pump, Water

Ref.	Part Number	Qty.	Description
90	98-9682	1	Gasket
100	98-9683	1	Gasket-Cover, Solenoid
110	105-3781	2	O-Ring
120	105-3777	2	O-Ring
130	105-3783	1	O-Ring
140	105-3776	1	O-Ring
150	105-3788	1	O-Ring
160	98-7601	1	Seal-Oil

Attachments and Accessories

For 30495 Groundsmaster 7200 Series Traction Unit

Product Name	Model/Part
Auxiliary Hydraulic Power Kit	30380
Tooth Rake	08751
Auxiliary Power Unit	30382
Finish Grader	08754
Steel Drag Mat	08757
Drag Mat Carrier System	08756
Coco Drag Mat	08758
42-pound Weight	114-4096
Premium Transmission/Hydraulic Tractor Fluid (55 Gallon Drum)	108-1183
Premium Transmission/Hydraulic Tractor Fluid (5 Gallon Pail)	108-1184
Green Diesel Cap	107-2172
Yellow Hydraulic Cap	107-1576
Overflow Tank Kit	117-5570
Brake Service Kit	120-0015
Jack-Stand Kit	30483
Fender Kit	117-9170
Polar Trac Cab	30474
V-Plow Mounting Kit	30378
Polar Trac Kit	30675
48in V-Plow	30750
Universal Sunshade	30349
TÜV Kit Instructions	111-5910
TÜV Kit Instructions	111-5243
TÜV Kit - Speed Decal 20kph	02980
TÜV Kit - German Vehicle Serial Plate	02983
5in Air Cleaner Safety Element	114-4057
Fuse-In Line	111-5101
CE Kit	30240
Blade-Belt Kit, 72in Side Discharge Deck	105-7272
Spark Arrestor Kit	112-1688
400-hour Filter Maintenance Kit	30052
Rear QAS	30812
60-Amp Alternator Kit, Kubota 05 Series-Powered Traction Unit	117-5540
Hitch Kit, Groundsmaster 7200/7210 Series Traction Unit with Kubota Engine	130-8717
Hitch Kit	130-8718
Wheel and Tire ASM	110-6406
Weight Mount Bracket Kit	114-4090
Weight Bracket Kit	125-2670
Premium Engine Oil 15w40 (55 Gallon Drum)	121-6394
Tire-Lug	103-6771
Premium Engine Oil 15w40 (5 Gallon Pail)	121-6395
Slow Moving Vehicle Kit	114-4050
North American Road Light Kit	30374
Recycler Kit, 60in Side Discharge Deck	30348
CE Kit, Grass Collection System	117-9249
60in Side Discharge Mower	30456

Attachments and Accessories (continued)

Baffle, Blower Housing 30658
Blade-Belt Kit 105-7270
62in Rear Discharge Completion Kit 30463
62in Guardian Recycler Completion Kit 30306
62in Rotary Mower 30457
62in CE Mower Cover Kit 30683
Blade-Belt Kit, 72in Guardian Only 105-7271
72in Rear Discharge Completion Kit 30466
72in Guardian Recycler Completion Kit 30304
72in Guardian Fine Recycler Completion Kit 30346
72in Base Deck 30353
72in Guardian and Rear Discharge CE Mower Cover Kit 30685
Leaf Mulching Kit 108-5273
Recycler Kit, 72in Side Discharge Deck 30347
Striping Kit 105-7273
72in Side Discharge Deck 30481
72in Side Discharge Mower (CE) 30354
CE Kit, 72in Side Deck With French Guards 30679
100in Rear Discharge Deck 31101
Adapter Kit for 100in Rear Discharge Deck 31104
Leaf Mulching Kit for 100in Rear Discharge Deck 31105
100in CE Mower Cover Kit 30687

TORO®

Count on it.