TORO

MODEL NO. 31210 - 900001 & UP
- 000001 & UP
- 100001 & UP

20" SNOW HOUND - Power Handle

PARTS CATALOG

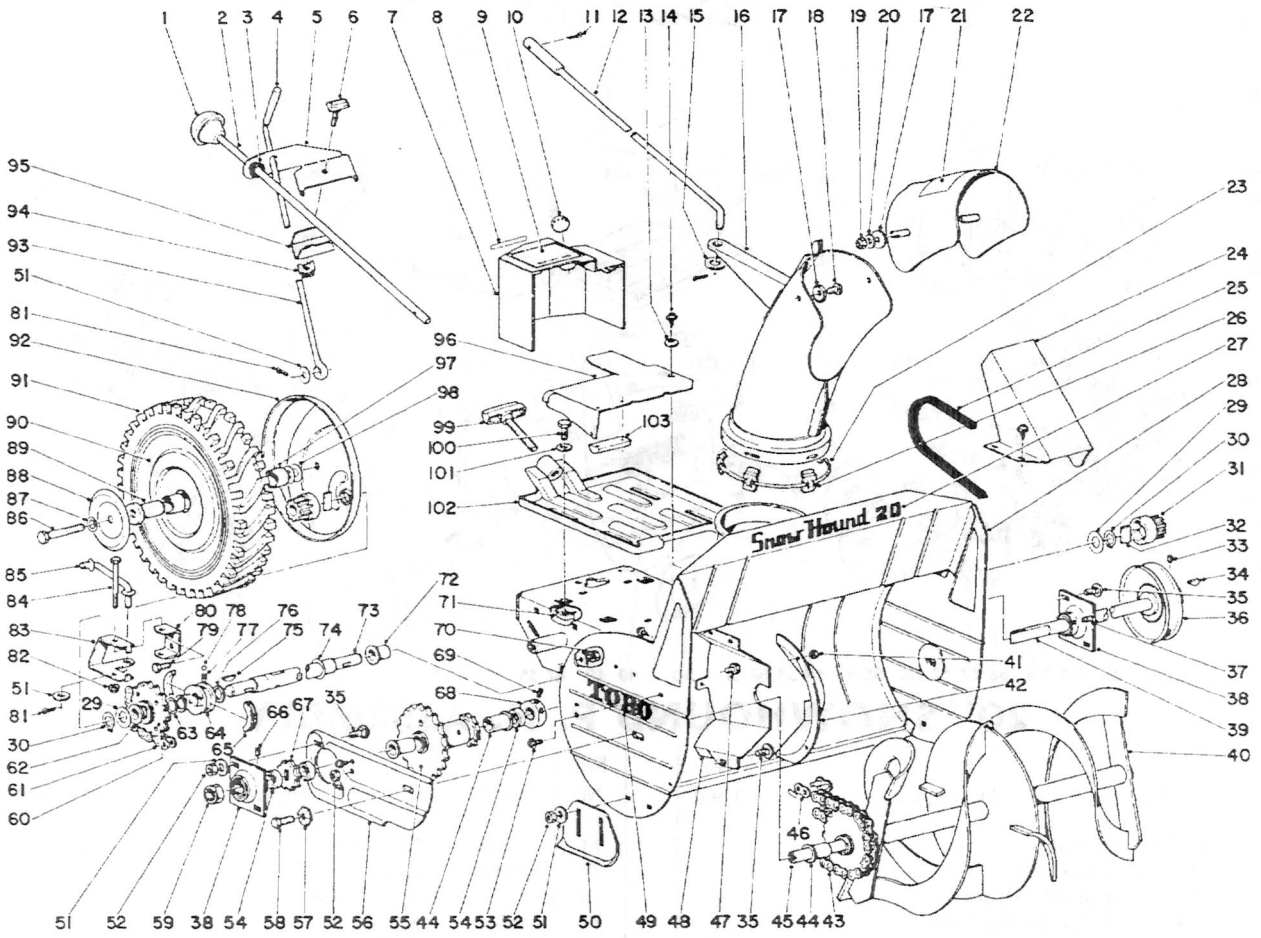

20" SNOWHOUND P. H. ASSEMBLY

Ref. No.	Part No.	Description	No. Used
1	233-11	Knob	1
2	3-6018	Control Rod Upper Chute	1
3	3-5975	Grommet	1
4	3-6055	Grip - Handle	1
5	3-6052	Bracket - Control	1
6	2-0470	Control Clamp Assy.	1
7	5-4420	Shroud - With Decal	1
8	5-4416	Decal Choke	1
9	5-4415	Decal - Start & Choke Inst.	1
10	2410-25	Plug Button	1
11	3272-7	Cotter Pin	2
12	3-7393	Rod - Chute	1
13	3290-227	Lockwasher	1
14	32104-77	Screw - Self Tapping	7
15	3256-5	Washer	1
16	3-7392	Chute	1
17	3290-249	Washer	4
18	32122-14	Screw	2
19	32146-5	Stop Nut	2
20	3256-2	Washer	2
21	3-1666	Decal	1

Ref. No.	Part No.	Description	No. Used
22	3-2596	Deflector	1
23	3-3927	Spring Garter	1
24	3-6058	Shroud - Belt	1
25	3-6044	Belt	1
26	3-3885	Clip	5
27	3-6301	Decal	1
28	3-7438	Frame Incl. Ref. #72	1
29	5-1078	Thrust Washer	2
30	32120-91	Snap Ring	2
31	1-3669	Pinion Kit	1
32	2-3620	Ratchet Dog	2
33	3246-2	Set Screw	2
34	3257-23	Key Hi-Pro	1
35	3-5861	Bolt - Carriage	8
36	3-2590	Pulley	1
37	3241-2	Set Screw	2
38	251-178	Bushing - Flange Mounted	2
39	3-7383	Shaft Drive	1
40	3-7373	Rotor Incl. Ref. #44	1
41	3296-12	Stop Nut	4
42	3-7396	Guard - Rotor Chain	1

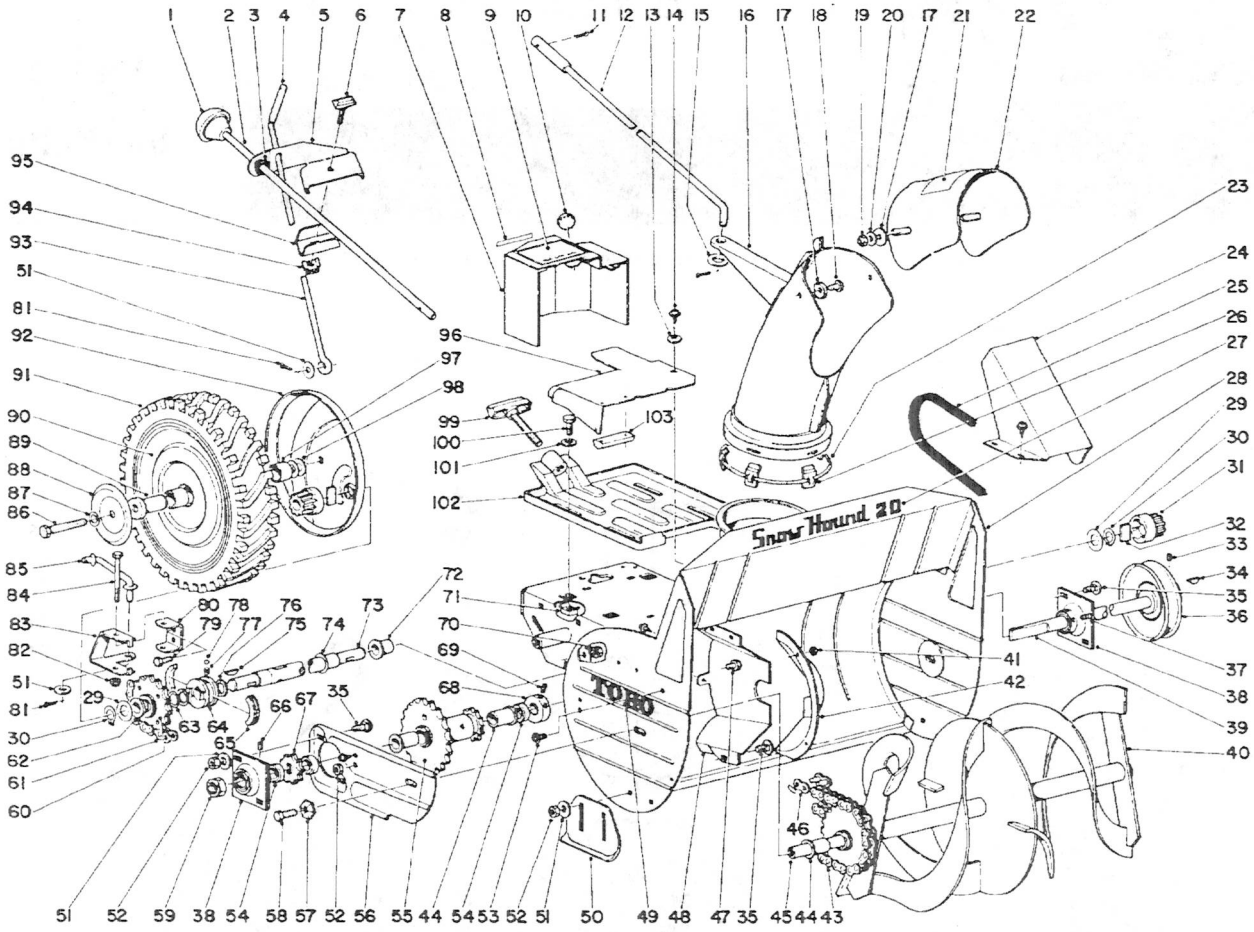

20" SNOWHOUND P. H. ASSEMBLY

Ref. No.	Part No.	Description	No. Used
43	3-6014	Chain	2
44	256-146	Bushing	4
45	3-5997	Shaft - Rotor	1
46	2710-6	Connecting Link	3
47	322-1	Capscrew	1
48	3-7397	Guard - Rotor Chain	1
49	3-1058	Decal	2
50	3-3866	Skid	2
51	3256-3	Washer	10
52	32146-5	Stop Nut	9
53	3290-144	Screw - Machine	4
54	3-7384	Spacer Countershaft	3
55	3-7378	Sprocket Incl. Ref. #44	1
56	3-7387	Support - Bearing	1
57	3290-224	Washer - Special	2
58	3211-4	Capscrew	2
59	3296-33	Stop Nut	1
60	3-9240	Drive Sprocket Incl. Ref. #62	1
61	3-6015	Chain	1
62	256-90	Bushing	1
63	3-1223	Thrust Washer	1
64	3-1631	Sliding Jaw	1
65	3-5264	Dog	2
66	3245-2	Set Screw	2
67	5-1076	Sprocket	2
68	3-5315	Collar	1
69	3246-3	Set Screw	2
70	3290-187	Locknut	2
71	3290-196	Nut & Retainer	4
72	3-4066	Bushing	2
73	3-3921	Drive Shaft	1

Ref. No.	Part No.	Description	No. Used
74	2-1640	Washer	1
75	3257-5	Key	1
76	32120-41	Snap Ring	2
77	2-4340	Spring	1
78	255-5	Ball	1
79	322-2	Capscrew	2
80	3-6424	Support - Pivot	1
81	3272-6	Cotter Pin	2
82	32146-8	Stop Nut	1
83	3-6005	Fork - Shift	1
84	321-14	Capscrew	1
85	3-6021	Link Shift	1
86	3212-11	Capscrew	2
87	3253-6	Lockwasher	2
88	2-6700	Hub Cap	2
89	3-6006	Spindle Wheel	2
90	1-3899	Wheel Incl. Ref. #97	2
91	3-5955	Tire	2
92	4-8540	Wheel Cover	2
93	3-6031	Control Rod - Traction	1
94	3290-198	Nut & Retainer	1
95	3-7395	Clamp - Control	1
96	3-7382	Guard - Chain	1
97	256-32	Bushing	4
98	5-0744	Washer	4
99	3-7454	Clamp Assy.	1
100	322-3	Capscrew	4
101	3256-23	Washer	4
102	4-2010	Adapter Plate	1
103	3-6312	Guide - Chain	1
*	2-8149	Loose Parts	1

* Not illustrated.

SPECIFICATIONS

ENGINE SNOW PROTECTION: Heater box covers carburetor to prevent snow-clogging and carburetor freeze ups.

DRIVE–ENGINE TO DRIVE SHAFT: "A" section notched V-belt on a 2.6" pitch diameter clutch pulley on power handle unit and a 3.5" pitch diameter steel drive shaft pulley. (reduction 1.34:1)

ROTOR TO SECONDARY DRIVE TUBE: 1/2" pitch x 1/4" wide #41 roller chain on a 10 tooth sprocket to a 24 tooth sprocket. (reduction 2.4:1)

ROTOR DRIVE: 1/2" pitch x 1/4" wide #41 roller chain on a 10 tooth driveshaft sprocket to a 24 tooth rotor sprocket. (reduction 2.4:1)

SECONDARY DRIVE TUBE TO WHEEL PINION DRIVE SHAFT: 1/2" pitch x 1/4" wide #41 roller chain on a 10 tooth sprocket to an 18 tooth sprocket.

PINION DRIVE SHAFT TO WHEELS: 13 tooth, 12 D.P. external dog ratchet pinion gear to an 86T, 12 D.P. internal gear, both wheels. (reduction 6.62:1)

REDUCTION, ENGINE TO WHEELS: 91.96:1

TIRES: Semi-pneumatic diagonal tread 2.25 x 10.5

GROUND CLEARANCE OF SCRAPER BLADE: 0" to 7/8" by adjusting skids.

WIDTH OF SWATH: 20"

BEARINGS: Drive shaft – flange mounted ball bearings, all others are oil impregnated sintered metal.

CHASSIS: Reinforced steel, 16 gage and 14 gage welded construction. 1/8" scraper blade.

SKIDS: 10 gage formed steel

TRACTION CONTROL: Lever operated positive engagement jaw clutch. Lever located on handle.

CHUTE CONTROL: Positive push-pull control rod located on handle. 240° total discharge direction control. Friction type adjustable chute deflector.

ROTOR: 9-3/4" diameter, 4 blade, 4 paddle, welded steel construction.

GUARDS: Belt and chain guards of formed steel construction.

DIMENSIONS:

Width:	22-1/2"
Length:	28" (not including handle)
Height:	18" (overall without upper chute and handle)

WEIGHT: Not including Power Handle Unit:
Total: 75 lbs.

Including Power Handle Unit:
Total: 116 lbs.

PRODUCT CHANGES

In an effort to make improvements available to Toro owners as quickly as possible, minor changes are incorporated into Toro's products from time to time that do not become immediately shown in the Parts Catalog. If such a change apparently has been made in your unit, which is not reflected in your manual, see your Toro distributor or his authorized Toro service dealer for information and part numbers.

Copyright 1968 By
Toro Manufacturing Corporation
Minneapolis, Minnesota 55420 U.S.A.

TORO

WE TAKE CARE

IMPORTANT ORDERING INSTRUCTIONS

Repair parts are available from your TORO dealer. To insure getting correct parts without delay, please furnish the following information:

1. Serial number of your product as shown on the name plate.
2. Part number, description and quantity of each part required.
3. Name and address where parts are to be shipped
4. Do NOT order by reference number, use part number only.

MAINTENANCE RECORD

Form No. 3310-1

Litho in U.S.A.