Form No. 3437-758 Rev A

TORO®

Count on it.

Parts Catalog

60V Cordless Power Shovel™ CE

Model No. 31803T—Serial No. 323000000 and Up

Register at www.Toro.com.
Original Instructions (EN)

CE

3437-758 A

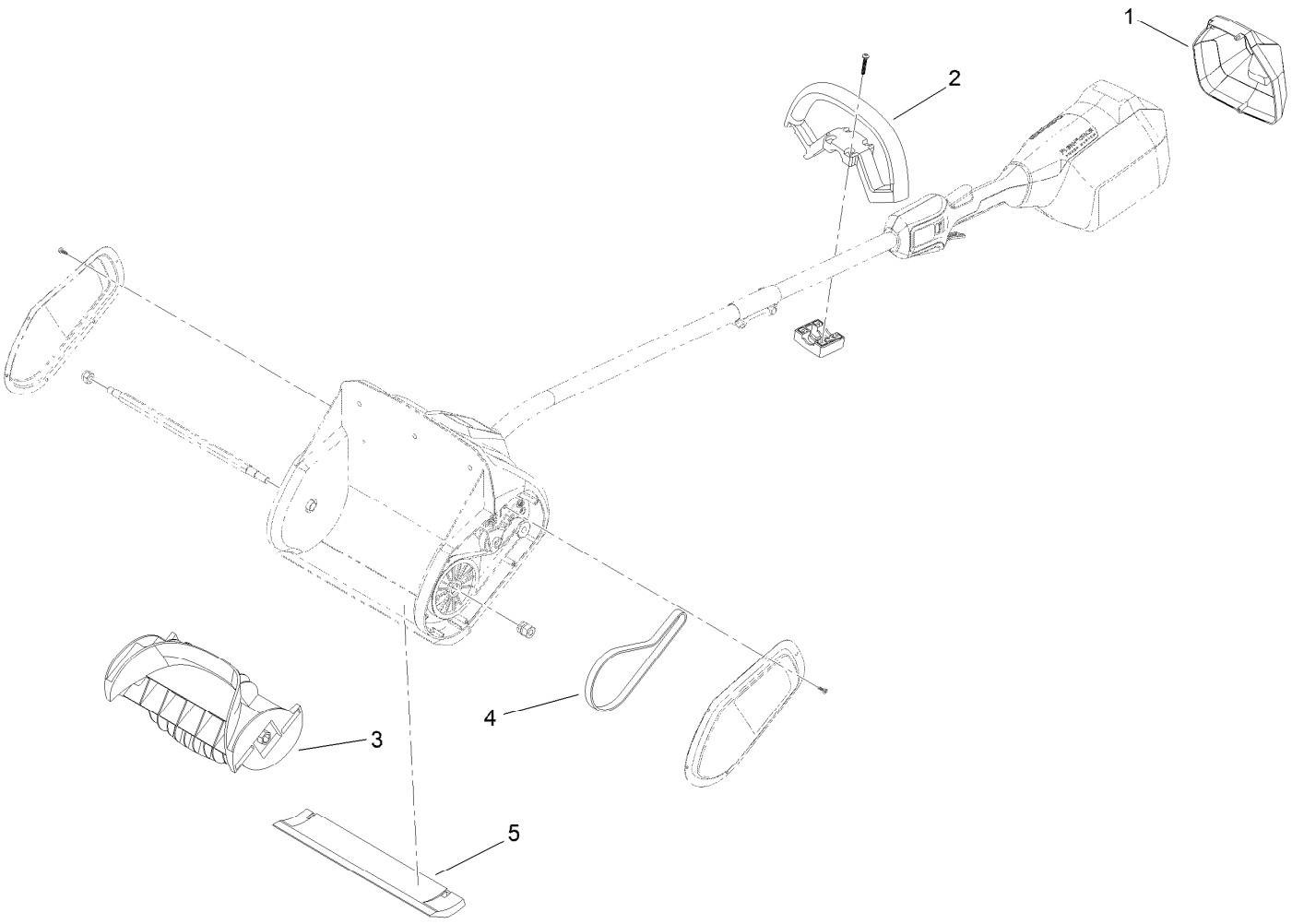

60V Cordless Power Shovel Assembly

Ref.	*Part Number*	*Qty.*	*Description*
1	137-6581	1	Cover-Battery
2	139-8255	1	Handle-Trimmer
3	137-6579	1	Auger
4	137-6578	1	Belt-Drive
5	145-0867	1	Scraper

Attachments and Accessories

For 31803T 60V Cordless Power Shovel CE

Product Name	Model/Part
60V Battery Charger 1 Amp CE	81801
60V Battery Charger 2 Amp CE	81802
60v Battery Charger 5 Amp International	81805
60V 2.0 AH Battery International	81820
60V 2.5 AH Battery CE	81825
60V 4.0 AH Battery CE	81850
60V 6.0 AH Battery CE	81860
60V 7.5 AH Battery CE	81875
60V 10.0 AH Battery LI-ION, CE	68810



Count on it.