Form No. 3324–319

Dingo® 322

Compact Utility Loader

Model No. 22305 & 22305A—200000501 & Up

Parts Catalog

Ordering Replacement Parts

To order replacement parts, please supply: the part number, the quantity, and the description of each part desired.

Understanding Reference Numbers

Each identified part in an illustration has a reference number. The reference number for a part also appears in the parts list, along with other information about the part.

This catalog uses two special reference number formats, one to indicate parts in a service assembly and another to indicate the quantity of a given part in an illustration.

Service Assembly Reference Numbers

Parts in service assemblies have reference numbers in the form **a:b.** The **a** represents the reference number of the entire service assembly and the **b** represents a sequential number unique to each part within the service assembly.

For example, a wheel assembly might be identified by reference number **6**, the tire by **6:1**, the valve by **6:2**, and the wheel by **6:3**. When you order the assembly identified by reference number 6, you receive all parts identified by reference numbers 6:1, 6:2, and 6:3. However, you may also order any part individually.

Reference numbers of this type appear in illustrations and in part lists.

Reference Numbers Indicating Quantity

In an illustration, if a reference number indicates more than one part, the reference number has the form **nX y.** The **n** represents the quantity of the part, the **X** is the multiplication symbol, and the **y** represents the reference number.

For example, in an illustration, the reference number **2X 37** means that two of the parts identified by reference number 37 are indicated.

© The TORO Company — 2000
All Rights Reserved

Contents

Description	Page
Frame And Loader Arm Assembly	3
Wheel And Motor Assembly	4
Hydraulic Motor Assembly No. 99–3052	5
Engine And Pump Assembly	6
Fuel Tank And Air Filter Assembly	7
Hydraulic Tank Assembly	8
Hydraulic Valves Assembly	9–10
Hydraulic Valve Assembly No. 99–3070	11
Hydraulic Valve Assembly No. 99–3072	12
Hydraulic Valve Assembly No. 99–3077	13
Hydraulic Valve Assembly No. 99–3073	14
Hydraulic Motors Assembly	15
Hydraulic Cylinders Assembly	16
Hydraulic Cylinder Assembly No. 100–4163	17
Decal Assembly	18
Electrical Assembly	19
Electrical Schematic	20
Hydraulic Schematic	21
Engine	22–31

Part Description Abbreviations

Part descriptions in this catalog may include the following abbreviations.

Abbreviation	Meaning
AR	as required
ASM	assembly
CARR	carriage
DEG	degrees
FH	flat head
GA	gauge
HF	hex flange
HH	hex head
HHF	hex head flange
HLH	hex lag head
HJ	hex jam
HOC	height-of-cut
HS	hex socket
HSBH	hex socket button head
HSFH	hex socket flat head
HSH	hex socket head
HWH	hex washer head
HWHTF	hex washer head thread forming
INC	incorporated
LH	left hand
NI	nylon insert
PPH	Phillips pan head
PTH	Phillips truss head
PTO	power take off
RH	right hand
SFH	slotted fillister head
SHH	slotted hex head
SQH	square head
SHWH	slotted hex washer head
SPH	slotted pan head
SRH	slotted round head
STD	standard
TAP	self tapping
TTH	Torx truss head
WH	wing head

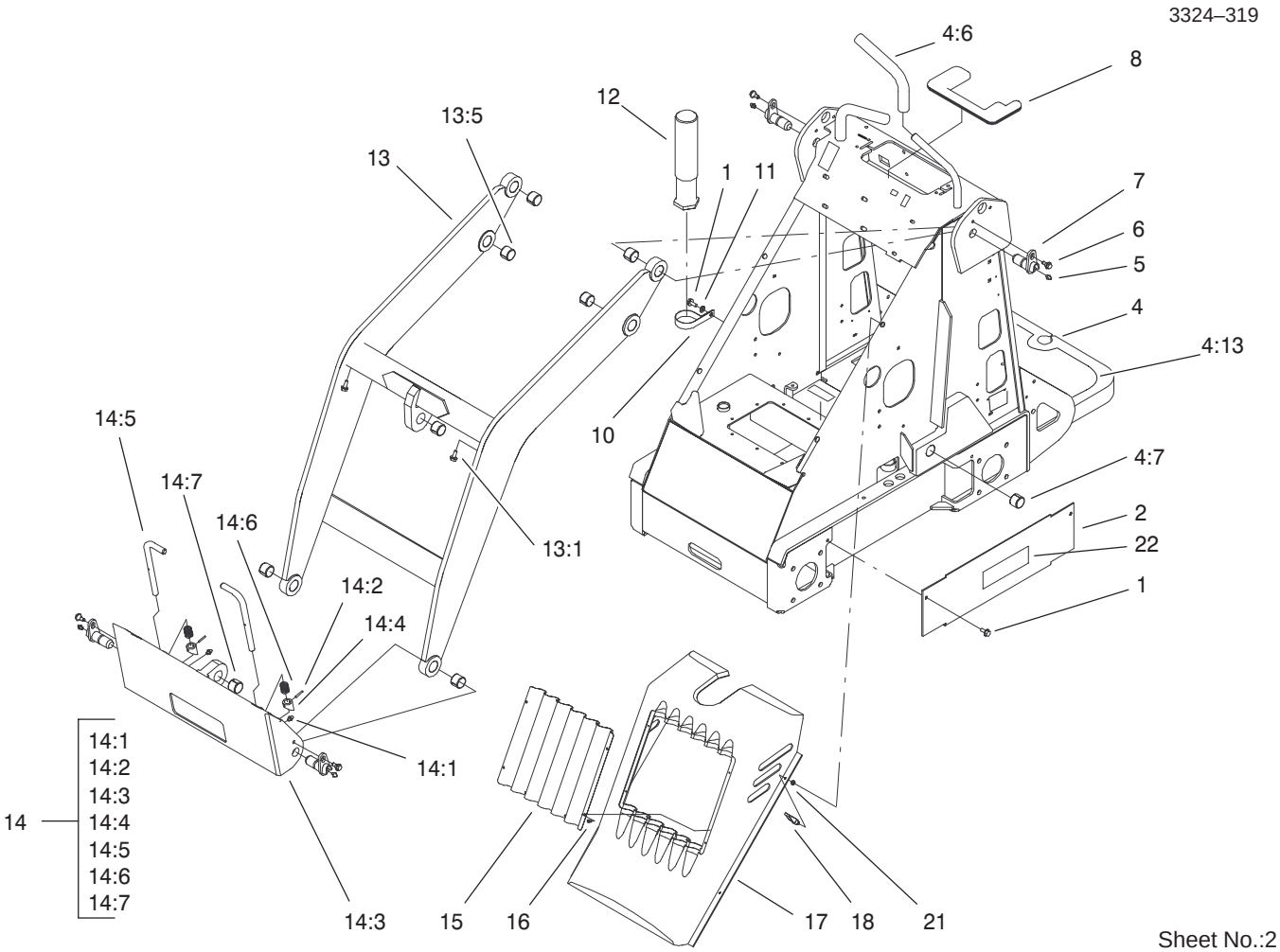

Frame And Loader Arm Assembly

Ref. No.	Part No.	Qty.	Description
1	32144–70	10	Screw–HH
2	99–3020	2	Cover – Hose
4	99–3154	1	Frame & Decal ASM
4:6	98–4845	2	Grip – Cushion
4:7	98–4871	2	Bushing – Tension
4:13	98–9947	2	Tread – Foot
5	302–5	10	Fitting–Lube
6	99–5105	10	Shoulder Screw
7	99–1414	10	Pin–Pivot
8	99–3155	1	Cover – Valve
10	2412–133	1	R–Clamp
11	3256–23	12	Washer–Flat
12	74–0720	1	Tube–Manual
13	100–8814	1	Loader & Decal ASM
13:1	32144–70	2	Screw–Taptite
13:5	98–4871	7	Bushing – Tension
14	98–4690	1	Quick Attach ASM
14:1	302–5	2	Fitting–Lube
14:2	32121–94	2	Special Pin
14:3	98–4691–03	1	Mount–Quick Attach
14:4	98–4692	2	Cam–Quick Attach
14:5	100–3373	2	Pin–Quick Attach
14:6	98–4694	2	Spring – Compression
14:7	98–4871	1	Bushing – Tension
15	99–3147	1	Grille – Screen
16	32144–111	8	Screw–Plask

Ref. No.	Part No.	Qty.	Description
17	99–3164	1	Cover – Hood
18	74–5950	4	Latch – Swell
21	99–3058	4	Washer
22	99–3068	2	Decal–4–PAW

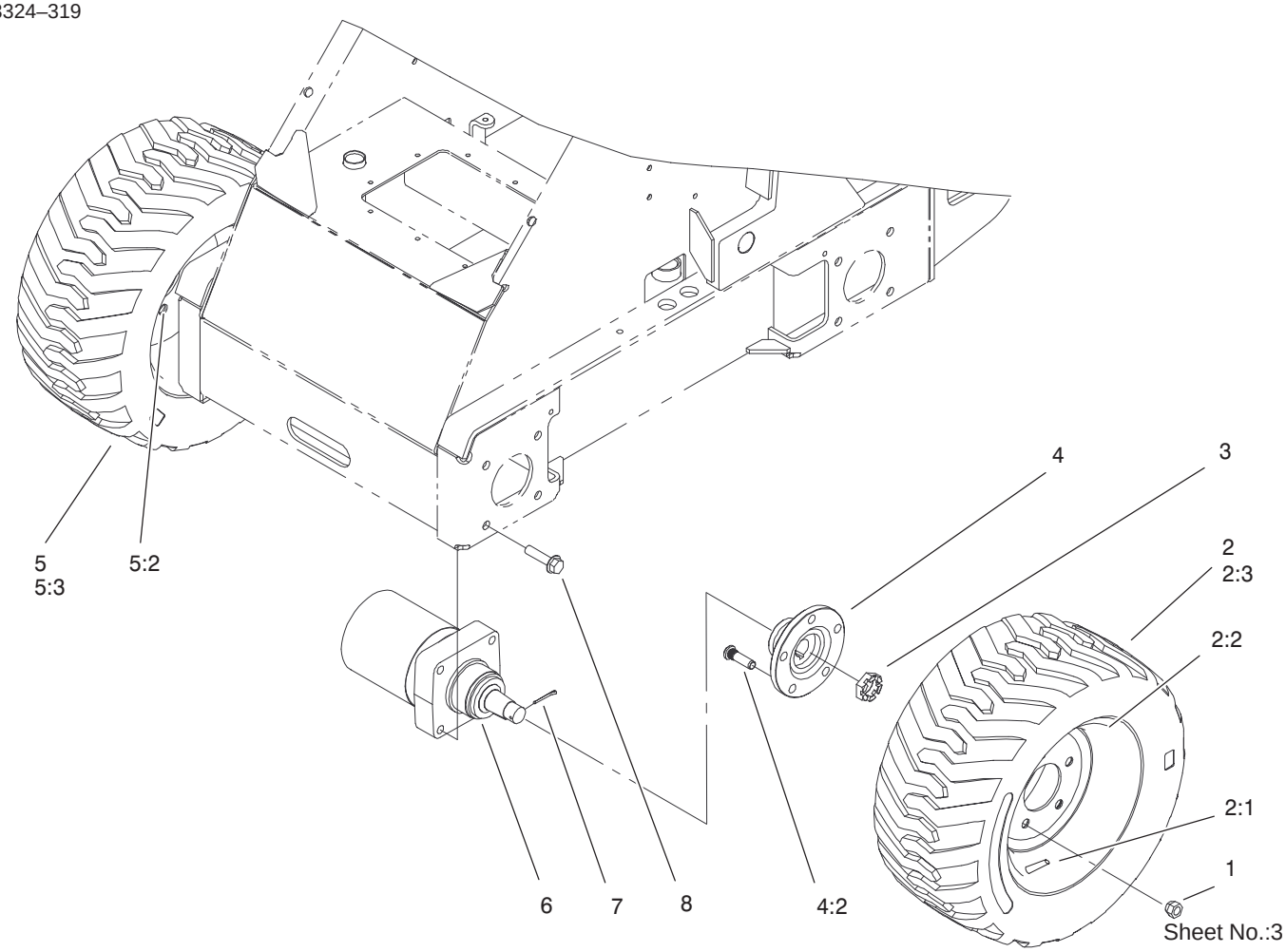

Wheel And Motor Assembly

Ref. No.	Part No.	Qty.	Description
1	242–50	20	Lug Nut
2	98–2747	2	LH Wheel & Tire ASM
2:1	232–27	1	Stem–Valve
2:2	98–2748	1	Wheel
2:3	98–2749	1	Tire
3	99–3139	4	Nut – Wheel Motor
4	99–3064	4	Hub ASM
4:2	10–6830	5	Stud–Drive Type
5	99–1447	2	RH Wheel & Tire ASM
*5:1	232–27	1	Stem–Valve
5:2	98–2748	1	Wheel
5:3	98–2749	1	Tire
6	99–3052	4	Hydraulic Motor ASM
*6:1	94–8178	1	Seal Kit–Hyd. Motor
*6:2	99–3090	1	Shaft–Coupling
*6:3	99–3091	7	Screw–HH
*6:4	3257–42	1	Key–Woodruff
7	99–3171	4	Pin – Cotter
8	3234–27	16	Screw–Flange

Ref. No.	Part No.	Qty.	Description

* Not illustrated

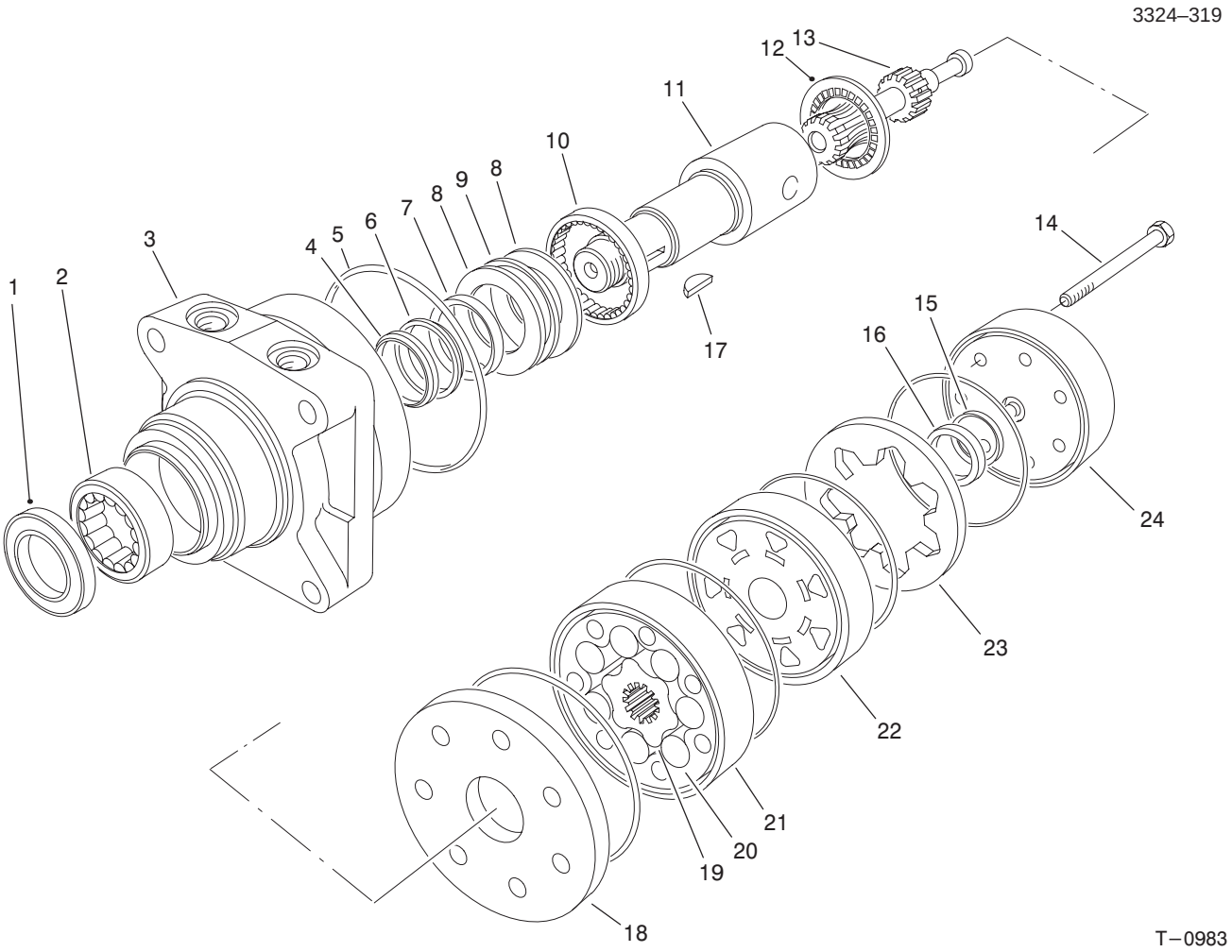

Hydraulic Motor Assembly No. 99–3052

Ref. No.	Part No.	Qty.	Description
†1		1	Ring – Seal
†2		1	Bearing
†3		1	Housing
†4		1	Washer
†5		5	Ring – Seal
†6		1	Washer – Back–Up
†7		1	Seal – Inner
†8		2	Washer – Thrust
†9		1	Bearing
†10		1	Bearing
11	99–3090	1	Shaft – Coupling
†12		1	Bearing – Thrust
†13		1	Link – Drive
14	99–3091	7	Screw – HH
†15		1	Seal – Commutator
†16		1	Commutator
†17	3257–42	1	Key – Woodruff
†18		1	Plate – Wear
†19		1	Rotor
†20		7	Vane
†21		1	Stator
†22		1	Manifold
†23		1	Ring – Commutator
†24		1	End Cover Assembly
*	94–8178	1	Seal Kit (Incl. Ref.#1, 4–7 & 15)

Ref. No.	Part No.	Qty.	Description

* Not illustrated
† Not Serviced Seperately

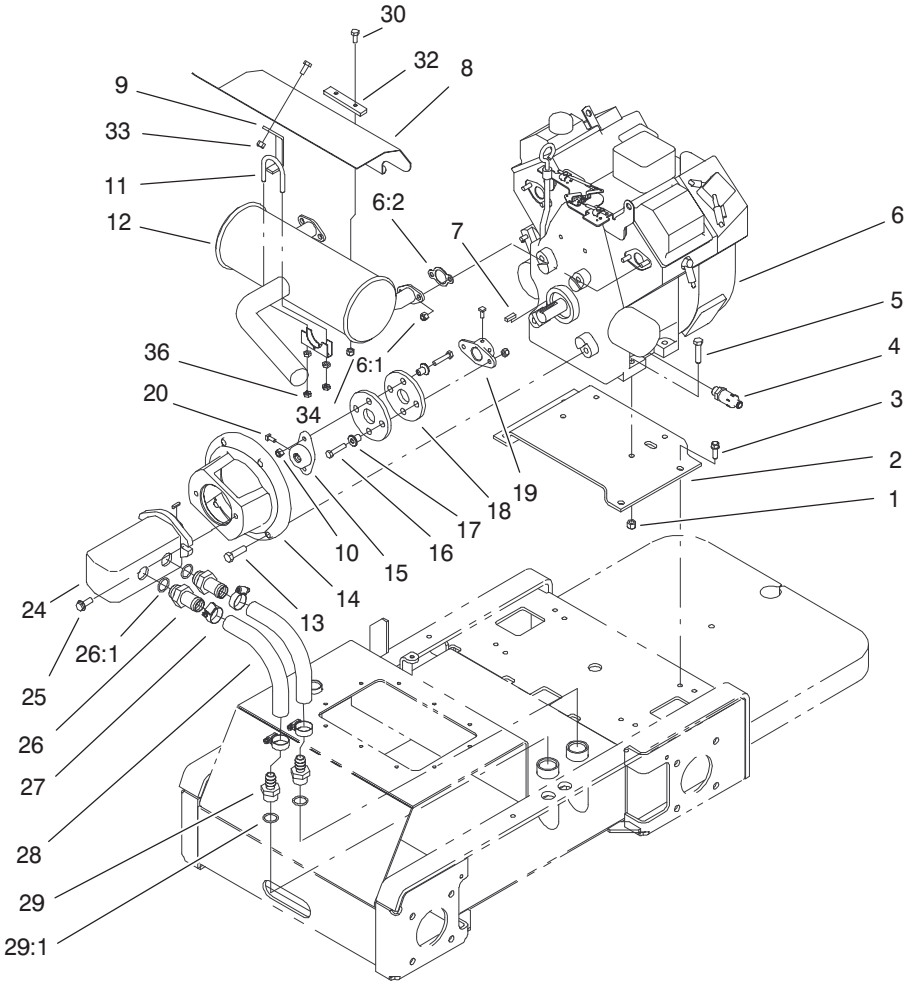

Sheet No.:4

Engine And Pump Assembly

Ref. No.	Part No.	Qty.	Description
1	3296–39	4	Nut–Lock Ni
2	98–4666–03	1	Mount – Engine
3	95–1726	4	Screw–Taptite w/Patch
4	92–6877	1	Valve – Oil Drain
5	323–9	4	Screw–HH
6		1	Engine – Kohler 22hp CH22S PS–66557
6:1	92–6780	4	Nut–HH F/W Engine
6:2	93–0350	2	Gasket–Exhaust F/W Engine
7	10–7070	1	Square Key
8	99–3115–03	1	Shield – Muffler
9	99–3138	1	Support – Shield
10	3296–29	21	Nut–Lock Ni
11	2112–9	1	Clamp
12	100–1711	1	Muffler–Kohler 22
*12:1	98–9099	1	Spark Arrestor (Optional)
13	324–6	4	Screw–HH
14	98–2751–03	1	Mount–Pump
15	98–4701	1	Hub – Pump, 5/8
16	322–7	4	Screw–HH
17	71–4411	4	Spacer
18	44–2230	2	Coupling–Rubber
19	27–1960	1	Hub–Engine

Ref. No.	Part No.	Qty.	Description
20	3241–6	4	Setscrew
24	98–4702	1	Pump – Gear, Tandem
24:1	98–4700	1	Key–Square
*24:2	99–1353	1	Seal Kit – Pump
25	66–9300	2	Screw–Flange
26	99–3017	2	Fitting
26:1	237–81	1	O–Ring
27	2412–111	4	Hose Clamp
28	99–3046	2	Hose – Hydraulic Suction
29	354–78	2	Connector–Hose
29:1	237–146	1	O Ring
30	3234–33	6	Screw–HHF
*31	98–4667	1	Hose – Drain, Oil
32	99–3116–03	1	Spacer–Bar
33	32152–1	1	Nut–Conelock
34	32152–4	2	Nut–Conelock
36	3218–1	2	Nut–Jam

* Not illustrated

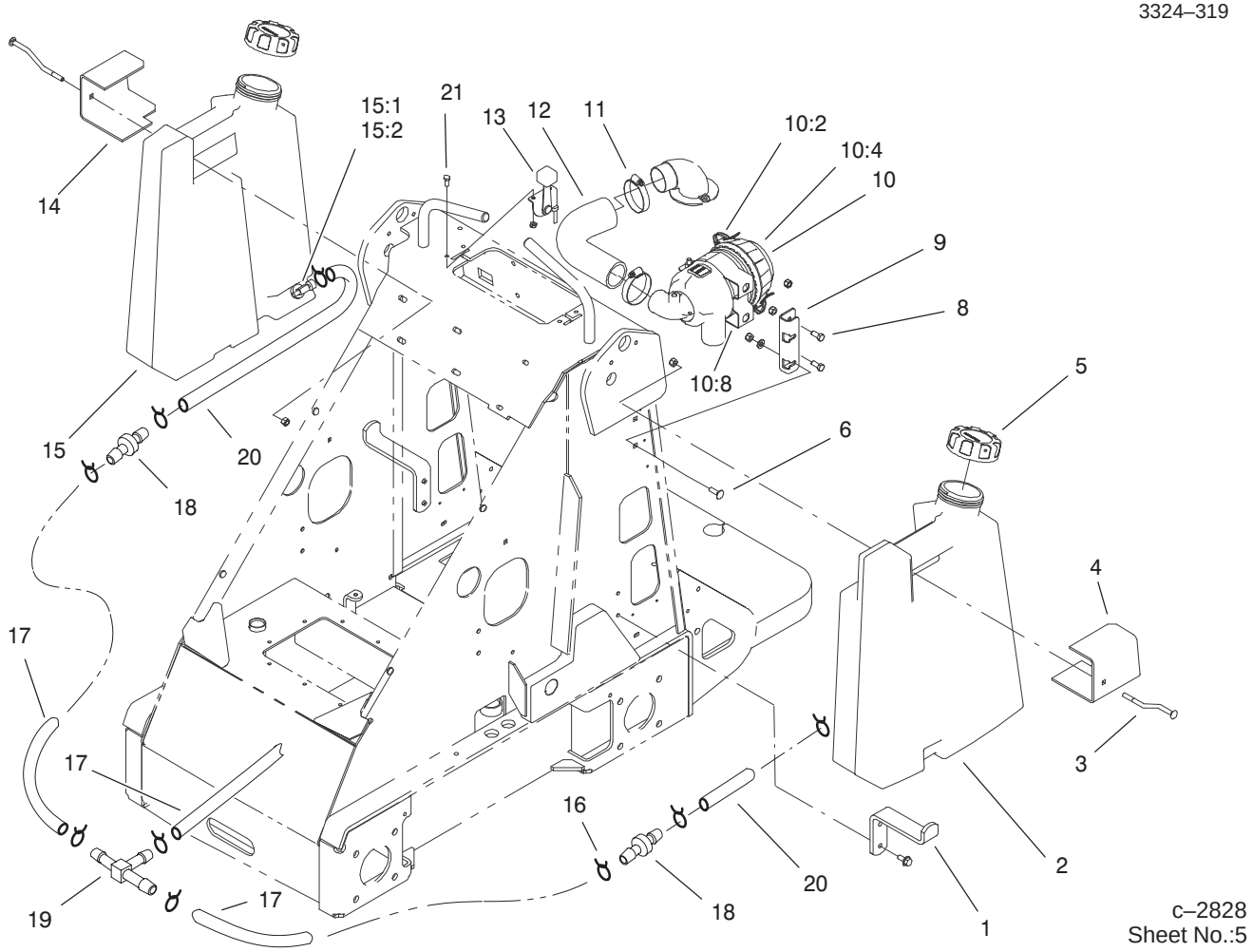

Fuel Tank And Air Filter Assembly

Ref. No.	Part No.	Qty.	Description
1	98–4656–03	2	Mount – Tank Bottom
2	99–5003	1	Fuel Tank ASM
*2:1	104047	2	Bushing
*2:2	104048	1	Valve–Fuel
*2:3	99–1420	1	Plug – Tank, Fuel
3	98–4657	2	Bolt – Mount
4	99–1444–03	1	Plate – Mount, Left
5	88–3980	2	Gas Cap Assembly
6	3230–2	2	Screw–CARR
8	322–3	5	Screw–HH
9	99–3080–03	1	Mount – Air Cleaner
10	99–3160	1	Air Cleaner ASM
*10:1	99–3173	1	Element–Filter
10:2	99–3174	2	Clip
*10:3	99–3175	1	Valve–Dust Ejector
10:4	99–3176	1	Cover
*10:7	99–3198	1	Filter–Safety
10:8	99–3197	1	Filter Bracket ASM
11	2412–42	2	Hose Clamp
12	99–3148	1	Hose – Air
13	85–9310	2	Control–Choke
14	98–4655–03	1	Plate – Mount
15	98–4654	1	Fuel Tank ASM
*15:1	104047	1	Bushing
*15:2	104048	1	Valve–Fuel
16	2412–98	10	Clamp

Ref. No.	Part No.	Qty.	Description
17	99–3185	3	Line – Fuel
18	99–5000	2	Valve – Check, Fuel
19	99–5005	1	Fitting – Tee, Barbed
20	99–5101	2	Line – Fuel
21	3234–33	4	Screw–HHF

* Not illustrated

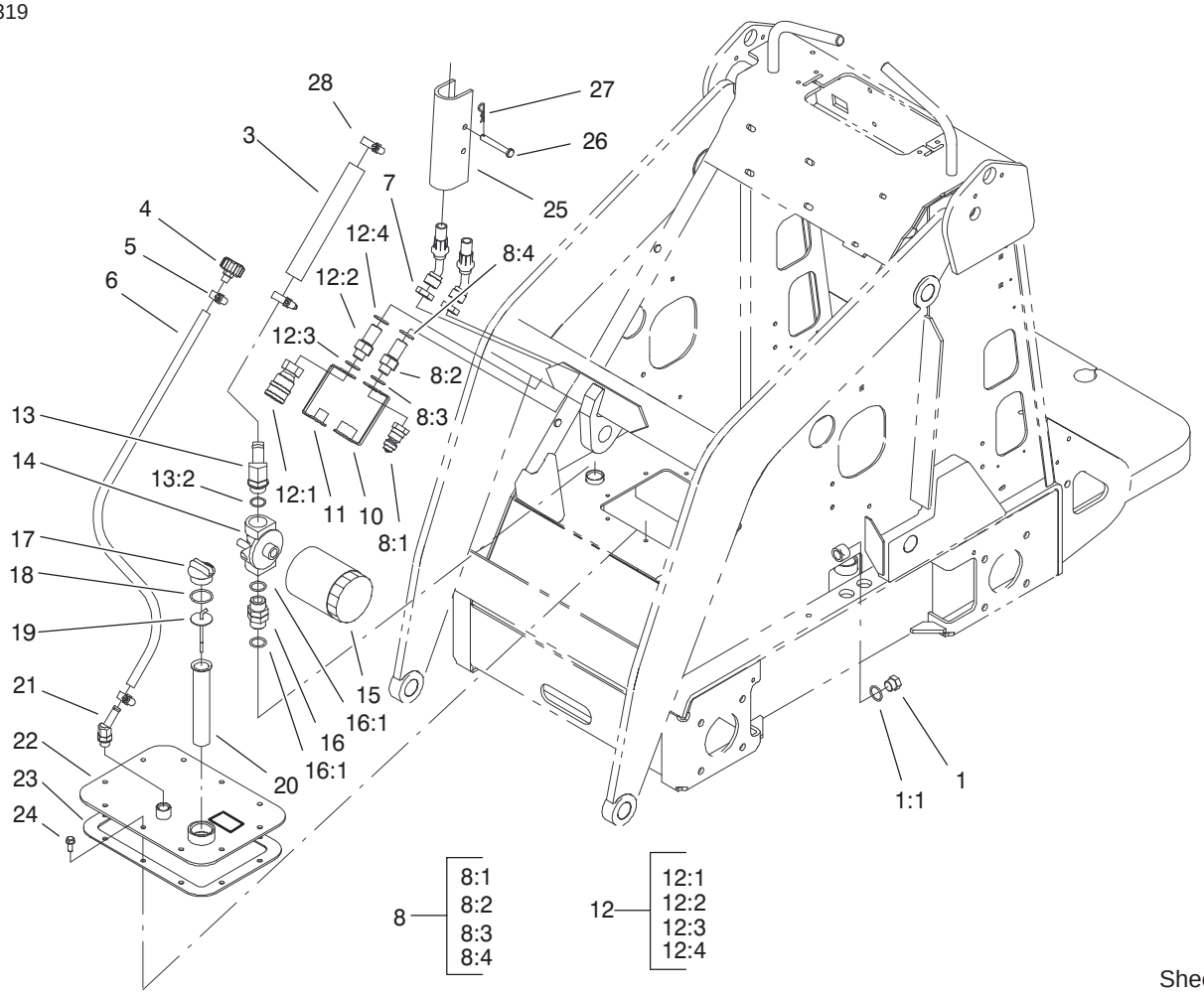

Sheet No.:6

Hydraulic Tank Assembly

Ref. No.	Part No.	Qty.	Description
1	353–988	1	Plug–Hollow Hex
1:1	237–79	1	O–Ring
3	98–2713	1	Hose–Hyd, Suction
4	68–6150	1	Breather–Air
5	2412–36	2	Clamp
6	98–2708	1	Hose – Vent
7	340–74	2	Nut–Bulkhead
8	100–4748	2	Nipple ASM–Bulkgead
8:1	100–4235	1	Nipple–Flush Face
8:2	100–4236	1	Fitting–Adapter, Bulkhead
8:3	237–65	1	O–Ring
8:4	237–80	1	O–Ring
10	100–8815	1	Cap – Dust, Nipple
11	100–8816	1	Plug – Dust, Coupler
12	100–4747	1	Coupler ASM–Bulkhead
12:1	100–4234	1	Coupler–Flush Face
12:2	100–4236	1	Fitting–Adapter, Bulkhead
12:3	237–65	1	O–Ring
12:4	237–80	1	O–Ring
13	99–3016	1	Fitting – 45 Degree
13:2	237–81	1	O–Ring
14	92–5821	1	Filter Head ASM
15	54–0110	1	Filter–Oil Transmission

Ref. No.	Part No.	Qty.	Description
16	98–9906	1	Fitting – Straight Thread
16:1	237–81	2	O–Ring
17	93–7498	1	Plug – Plastic
18	237–123	1	O–Ring
19	100–2097	1	Dipstick
20	61–2790	1	Screen Filter
21	354–126	1	Fitting–Hyd
22	100–1713–01	1	Cover
23	98–9927	1	Gasket – Cover
24	98–9940	10	Screw
25	98–4675–01	2	Lock–Cylinder
26	283–52	2	Pin–Clevis
27	3290–467	2	Hairpin Cotter
28	2412–129	2	Clamp–Hose

* Not Illustrated

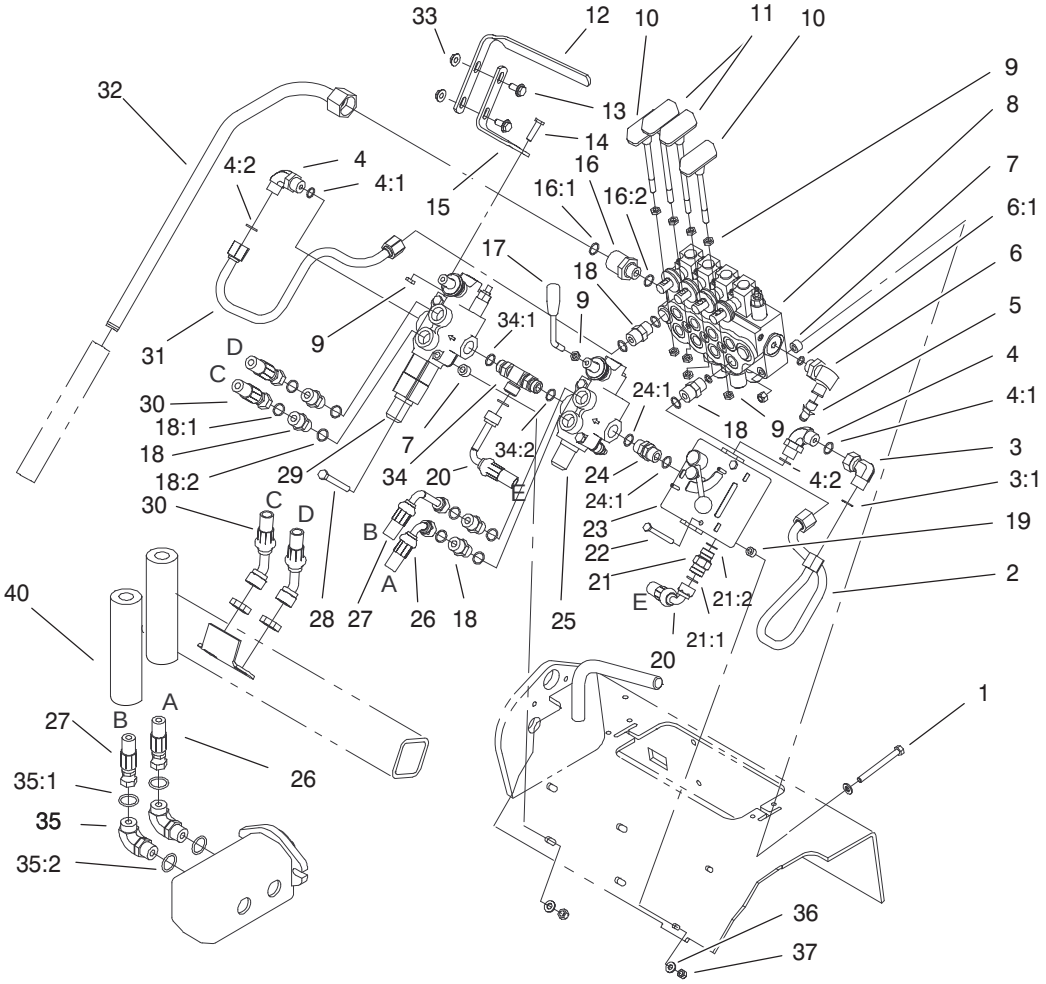

Sheet No.:7

Hydraulic Valves Assembly

Ref. No.	Part No.	Qty.	Description
1	322–20	3	Screw–HH
2	99–3030	1	Line–Hyd, Cf
3	94–6031	1	Fitting – Hyd
3:1	237–30	1	O–Ring
4	340–98	2	Adapter
4:1	237–30	1	O–Ring
4:2	237–79	1	O–Ring
5	86–5480	1	Nipple–Diagnostic
6	340–18	1	Adapter – 90°
6:1	237–79	1	O–Ring
6:2	237–22	1	O–Ring
7	98–4695	7	Tube – Spacer
8	99–3070	1	Valve–Hydraulic
*8:1	99–3074	4	Gasket
*8:2	99–3075	6	Gasket
*8:3	99–4390	1	Seal Kit
9	42–9580	10	Nut–Hex
10	98–4671	2	Cylinder Handle ASM
11	98–4670	2	Drive Handle ASM
12	98–9090	1	Grip – Control
13	3234–5	2	Screw–HHF
14	33104–030	1	Screw–HHF
15	99–1376	1	Mount – Control
16	98–9921	1	Fitting–Straight Thread
16:1	237–145	1	O–Ring
16:2	237–79	1	O–Ring

Ref. No.	Part No.	Qty.	Description
17	98–4729	1	Lever – Valve
18	340–4	6	Adapter
18:1	237–30	1	O–Ring
18:2	237–79	1	O–Ring
19	98–4799	2	Tube – Spacer
20	98–4744	1	Hose ASM
21	98–4735	1	Valve – Hyd, Check
21:1	237–30	1	O–Ring
21:2	237–79	1	O–Ring
22	321–14	2	Screw–HH
23	99–3073	1	Valve–Flow Control
*23:1	98–9097	1	Seal Kit–Valve
*23:2	98–9098	1	Kit – Handle Hardware

* Not illustrated

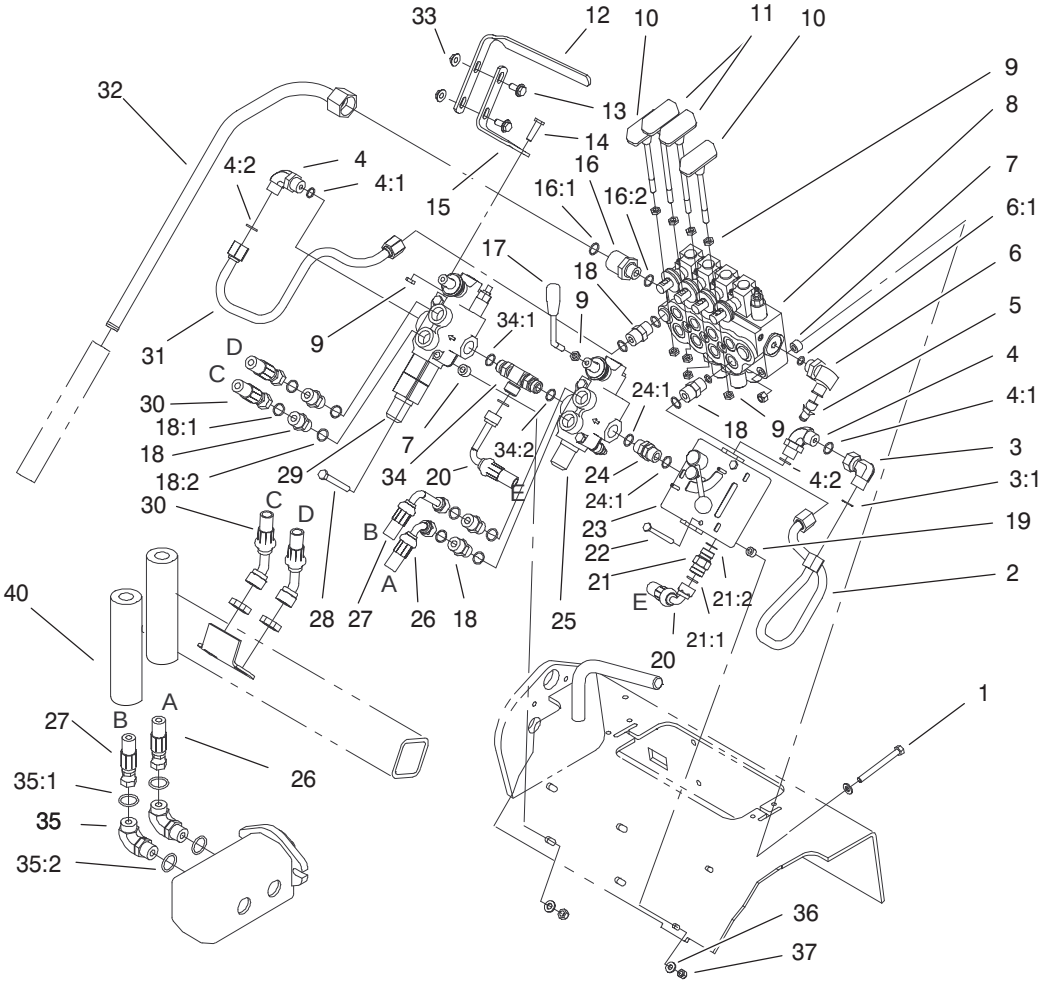

Sheet No.:7

Hydraulic Valves Assembly (Continued)

Ref. No.	Part No.	Qty.	Description
24	95–3209	1	Fitting – Straight Thread
24:1	237–79	2	O–Ring
25	99–3072	1	Valve – Hyd, Selector
*25:1	99–3074	1	Gasket
*25:2	99–3075	1	Gasket
*25:3	99–4391	1	Seal Kit
26	98–4747	1	Hose–Hyd, Pressure Hi
27	99–3008	1	Hose–Hyd, Pressure
28	322–13	4	Screw–HH
29	99–3077	1	Valve – Hyd, Aux
*29:1	99–3074	1	Gasket
*29:2	99–3075	1	Gasket
*29:3	99–4391	1	Seal Kit
30	100–8817	2	Hose – Hyd, Aux
31	98–4724	1	Line – Hydraulic, Aux
32	99–3021	1	Line – Hydraulic, Tank
33	32128–44	2	Nut
34	98–9079	1	Adapter – Tee, Adjustable
34:1	237–30	1	O–Ring
34:2	237–79	2	O–Ring
35	340–105	2	90° Elbow
35:1	237–30	1	O–Ring
35:2	237–80	1	O–Ring

Ref. No.	Part No.	Qty.	Description
36	3256–22	6	Washer–Flat
37	3296–42	8	Nut–Lock Ni
40	100–8818	2	Sleeve–Hose Guard
*99	3290–379	9	Plastic Ty–On
*99	3296–27	1	Nut–Lock Ni
*99	505–33	1	Saf–T–Lok

* Not illustrated

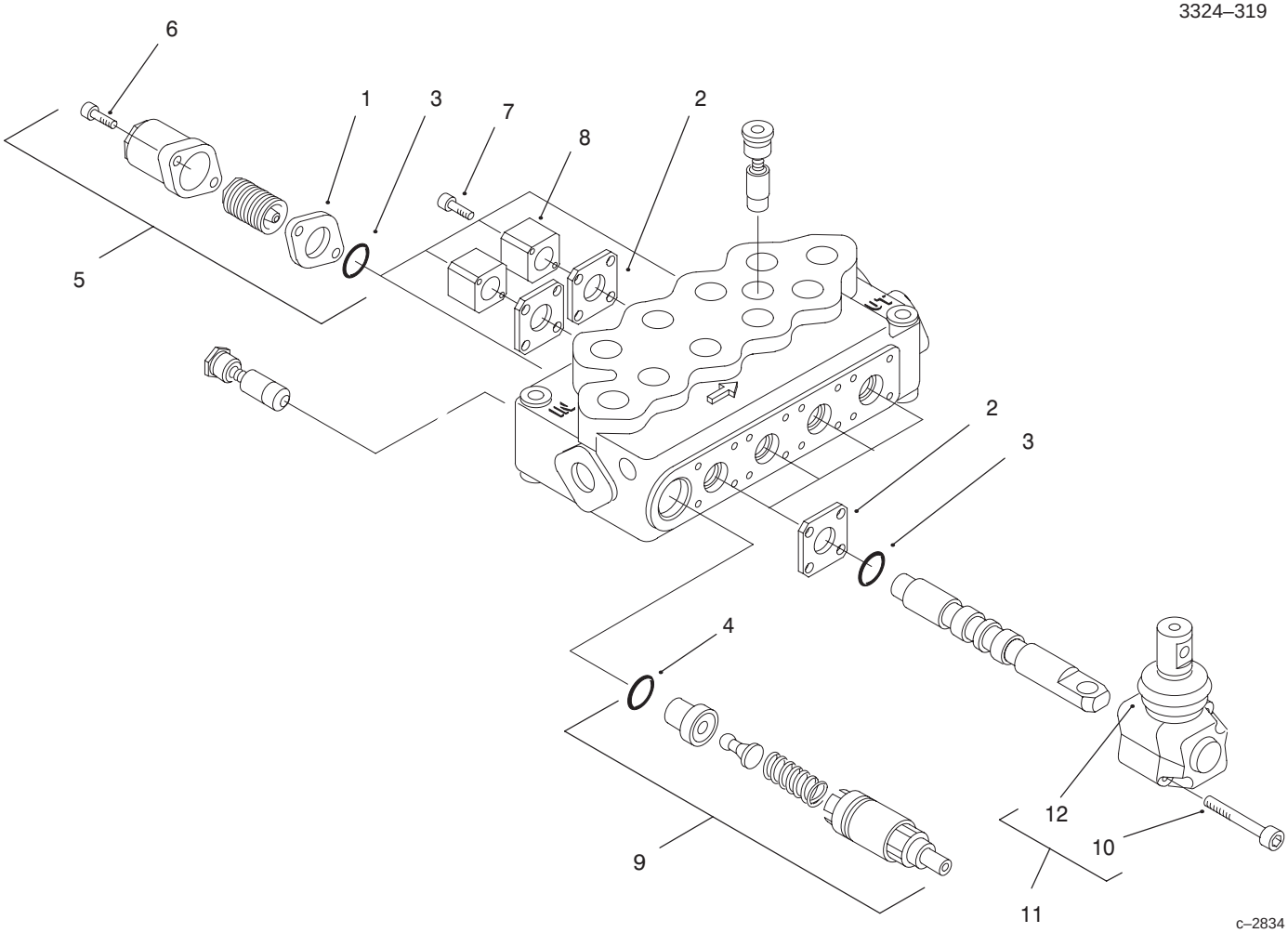

Hydraulic Valve Assembly No. 99–3070

Ref. No.	Part No.	Qty.	Description
1	99–3074	4	Gasket
2	99–3075	6	Gasket
†3		8	O–Ring
†4		1	O–Ring
5	100–8800	4	Spring ASM–Standard
5	100–8801	4	Spring ASM–High Force
6	100–8802	8	Screw–End Cap
7	100–8803	4	Screw–Body
8	100–8804	2	Block–Switch Mount
9	100–8805	1	Valve–Relief
10	100–8806	8	Screw–Operator
11	100–8807	4	Operator ASM
12	100–8829	4	Boot–Operator
*	99–4390	1	Seal Kit (Incl. Ref.# 3 & 4)

Ref. No.	Part No.	Qty.	Description

* Not illustrated

† Not Serviced Seperately

3324–319

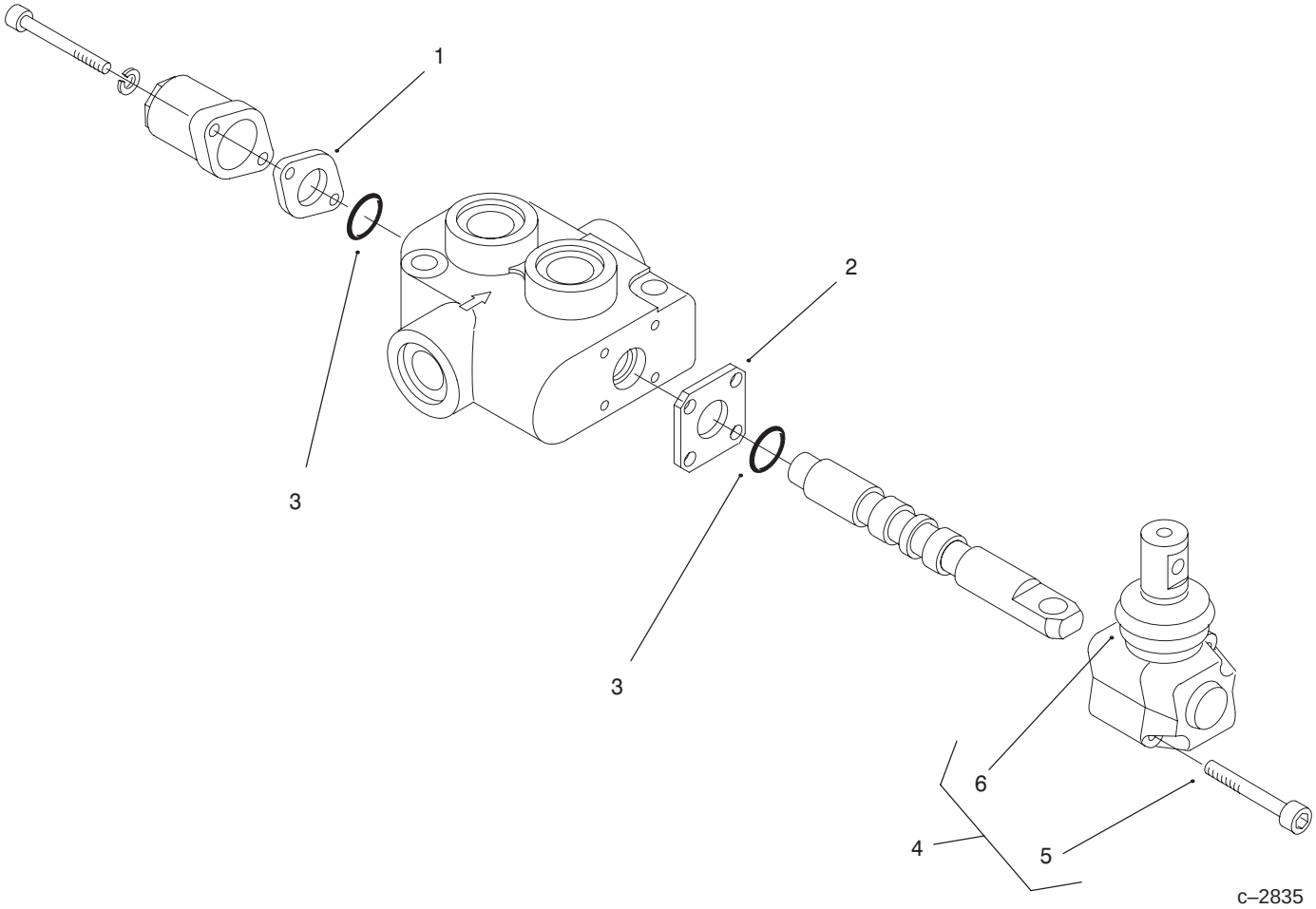

Hydraulic Valve Assembly No. 99–3072

Ref. No.	Part No.	Qty.	Description
1	99–3074	1	Gasket
2	99–3075	2	Gasket
†3		2	O–Ring
4	100–8807	1	Operator ASM
5	100–8806	2	Screw–Operator
6	100–8829	1	Boot–Operator
*	99–4391	1	Seal Kit (Incl. Ref.#3)

Ref. No.	Part No.	Qty.	Description

* Not illustrated
† Not Serviced Seperately

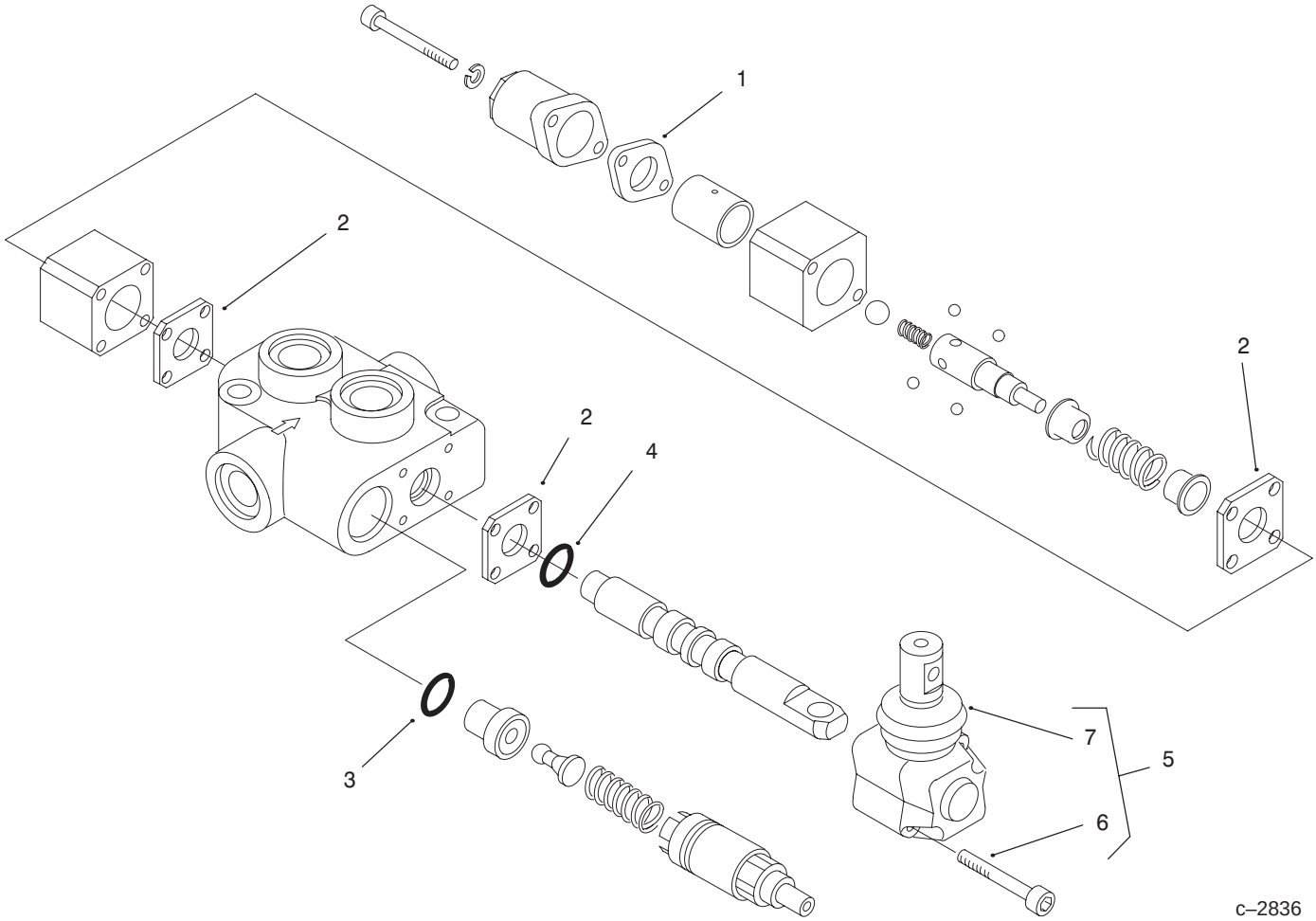

Hydraulic Valve Assembly No. 99–3077

Ref. No.	Part No.	Qty.	Description
1	99–3074	1	Gasket
2	99–3075	1	Gasket
†3		1	O–Ring
†4		2	O–Ring
5	100–8807	1	Operator ASM
6	100–8806	2	Screw–Operator
7	100–8829	1	Boot–Operator
*	99–4391	1	Seal Kit (Incl. Ref.# 3 & 4)

Ref. No.	Part No.	Qty.	Description

* Not illustrated
† Not Serviced Seperately

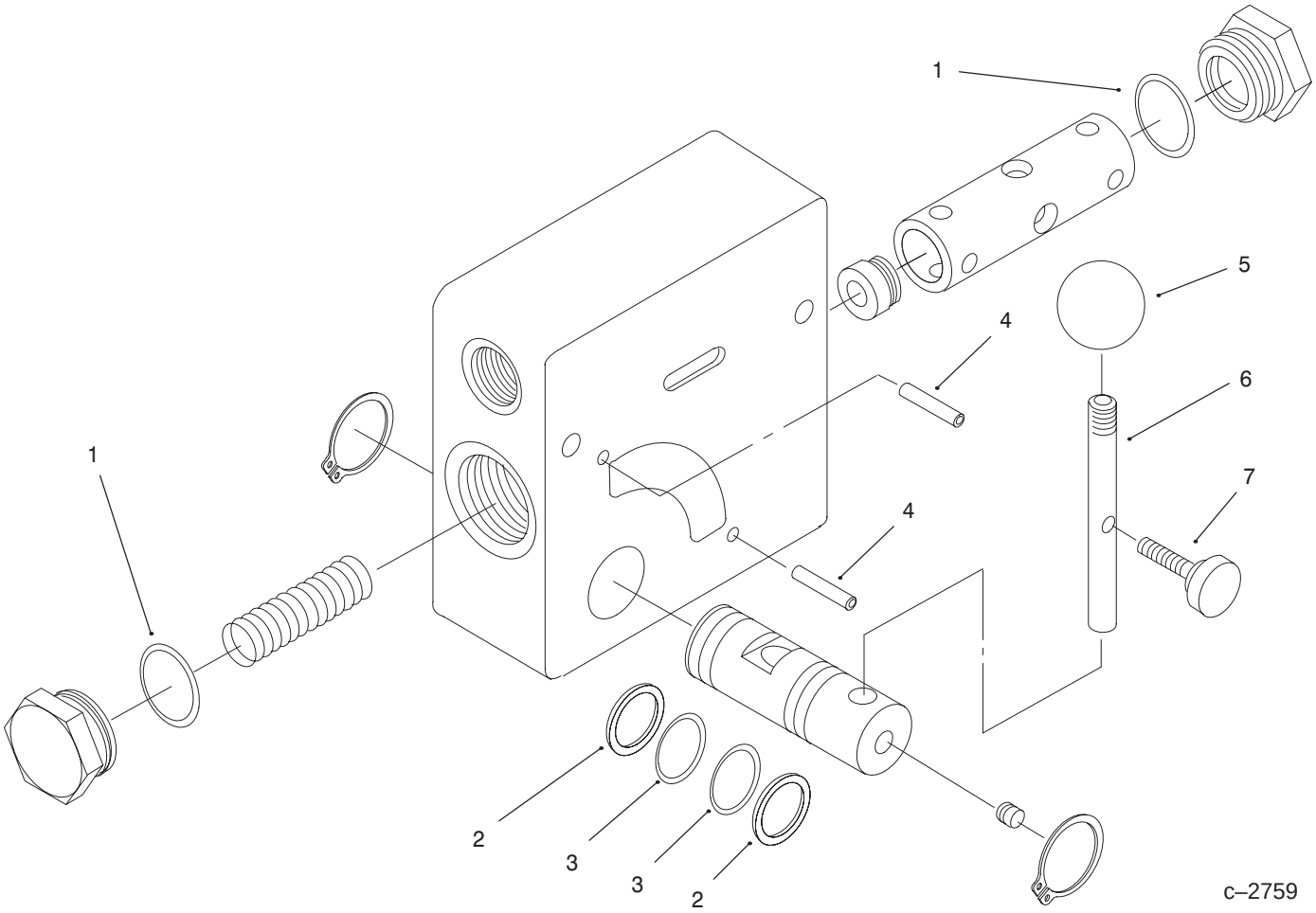

Hydraulic Valve Assembly No. 99–3073

Ref. No.	Part No.	Qty.	Description
†1		2	O–Ring
†2		2	Back–Up Washer
†3		2	O–Ring
†4		2	Roll Pin
†5		1	Handle Knob
†6		1	Handle
†7		1	Thumb Screw
*	98–9097	1	Seal Kit (Incl. Ref.# 1–3)
*	98–9098		Handle Kit (Incl. Ref.# 4– 7)

Ref. No.	Part No.	Qty.	Description

* Not illustrated
† Not Serviced Seperately

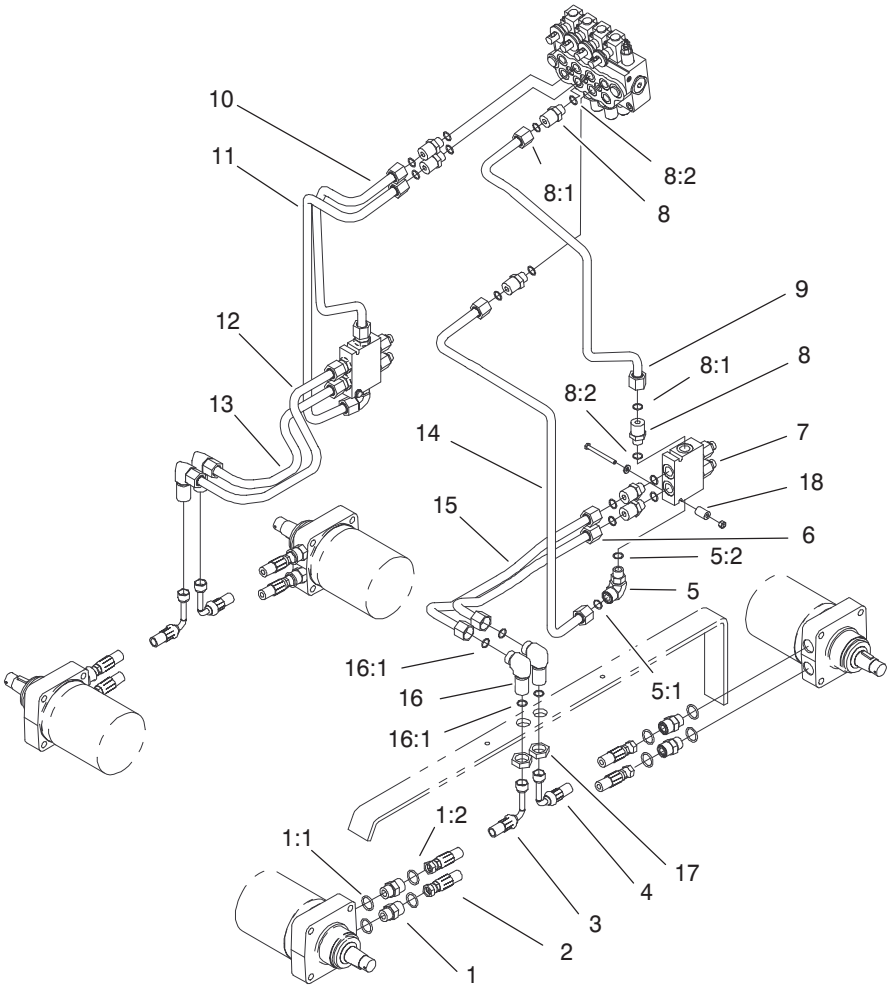

Sheet No.:8

Hydraulic Motors Assembly

Ref. No.	Part No.	Qty.	Description
1	340–7	8	Adapter
1:1	237–65	1	O–Ring
1:2	237–80	1	O–Ring
2	99–3012	2	Hose–Hyd, Motor
3	99–3010	2	Hose–Hyd, Motor Front
4	99–3011	2	Hose–Hyd, Motor Rear
5	340–153	2	Fitting – Hyd
5:1	237–79	1	O–Ring
5:2	237–151	1	O Ring
6	99–3022	1	Line–Hyd, Left A1
7	99–3040	2	Valve–Counterbalance
*7:1	98–2712	1	Seal Kit–Valve
*7:2	98–3271	2	Valve–Cartgridge
*7:3	100–8864	1	Manifold ASM
*7:4	100–8865	1	Needle Valve ASM
8	340–155	10	Fitting – Hyd
8:1	237–79	1	O–Ring
8:2	237–151	1	O–Ring
9	99–3027	1	Line–Hyd, Left B
10	99–3024	1	Line–Hyd, Right B
11	99–3029	1	Line–Hyd, Left A1
12	99–3025	1	Line–Hyd, Right B1
13	99–3028	1	Line–Hyd, Right A1
14	99–3023	1	Line–Hyd, Left A

Ref. No.	Part No.	Qty.	Description
15	99–3026	1	Line–Hyd, Left B1
16	340–72	4	Elbow–Bulkhead Union, 90°.
16:1	237–65	2	O–Ring
17	340–74	4	Locknut–Bulkhead
18	99–3057	2	Spacer–Valve

* Not illustrated

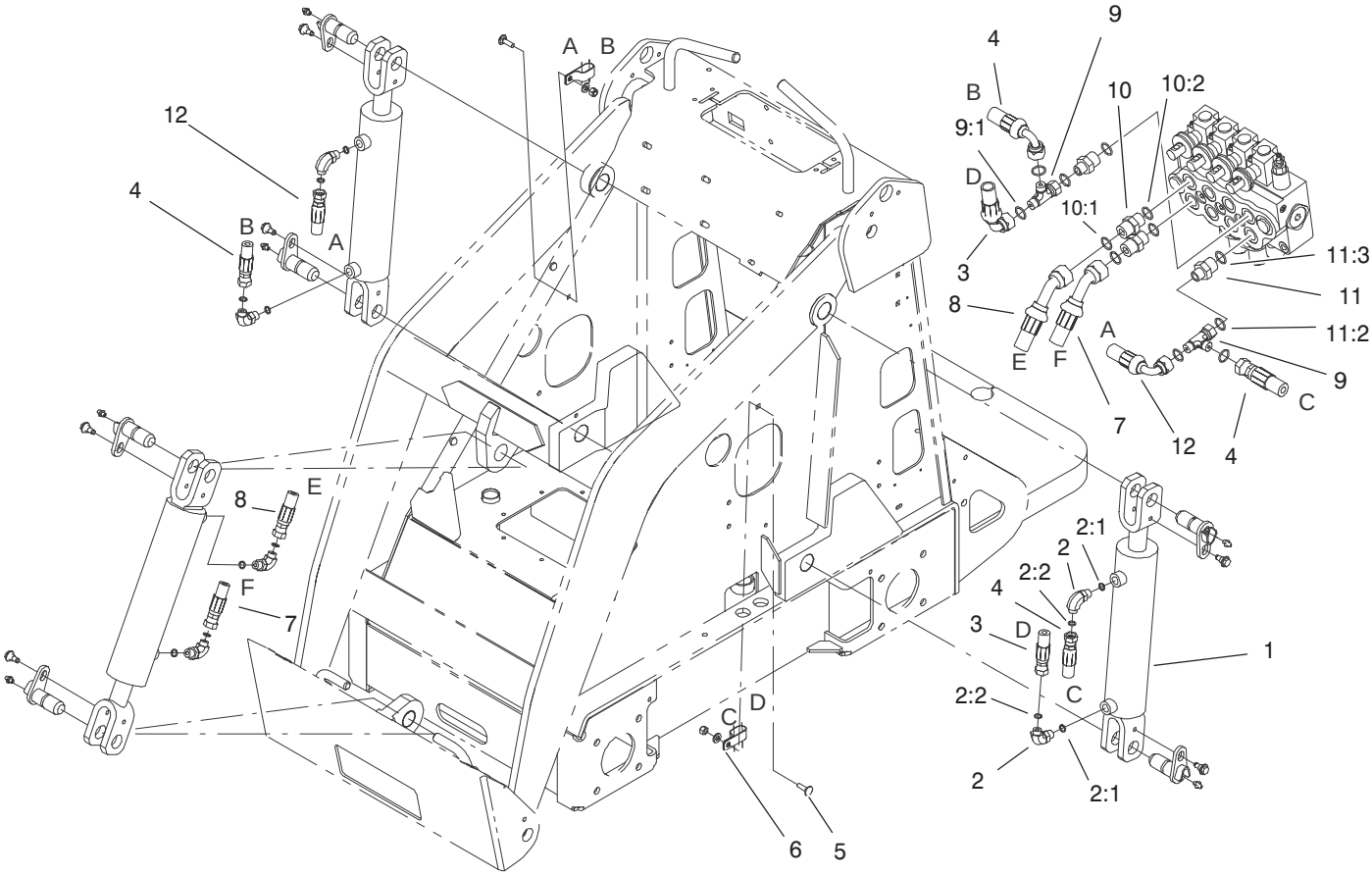

Sheet No.:9

Hydraulic Cylinders Assembly

Ref. No.	Part No.	Qty.	Description
1	100–4163	3	Cylinder – Hydraulic
*1:1	99–3065	1	Seal Kit–Hyd. Cylinder
2	340–82	6	Adapter
2:1	237–42	1	O–Ring
2:2	237–35	1	O–Ring
3	98–4748	1	Hose – Hyd, Pressure Lo
4	98–4725	2	Hose – Hyd, Loader
5	3230–2	2	Screw–CARR
6	2412–137	2	Tube Clamp
7	98–4726	1	Hose–Hyd, Center Long
8	98–4727	1	Hose–Hyd, Center Straight
9	340–151	2	Fitting
9:1	237–75	3	O–Ring
10	340–3	2	Adapter
10:1	237–22	1	O Ring
10:2	237–79	1	O–Ring
11	340–133	2	Adapter
11:2	237–78	1	O–Ring
11:3	237–35	1	O–Ring
12	99–3109	1	Hose–Hyd, Loader

Ref. No.	Part No.	Qty.	Description

* Not illustrated

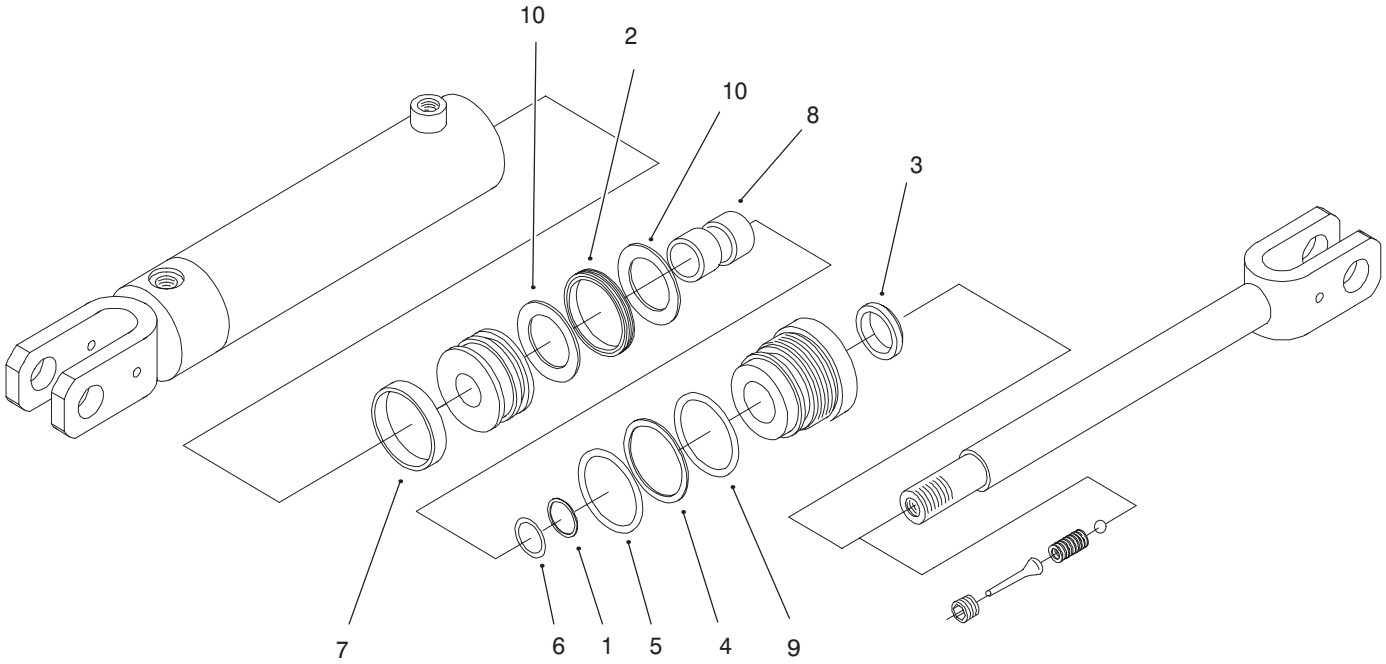

c–2824

Hydraulic Cylinder Assembly No. 100–4163

Ref. No.	Part No.	Qty.	Description
†1		1	Washer–Backup
†2		1	PSP Seal
†3		1	Rod–Wiper
†4		1	Washer–Backup
†5		1	O–Ring
†6		1	Polypak
†7		1	Wear Ring
†8		2	Wear Ring
†9		1	O–Ring
†10		2	Washer–Backup
*	99–3065	1	Seal Kit (Incl. Ref. #1–10)

Ref. No.	Part No.	Qty.	Description

* Not illustrated

† Not Serviced Seperately

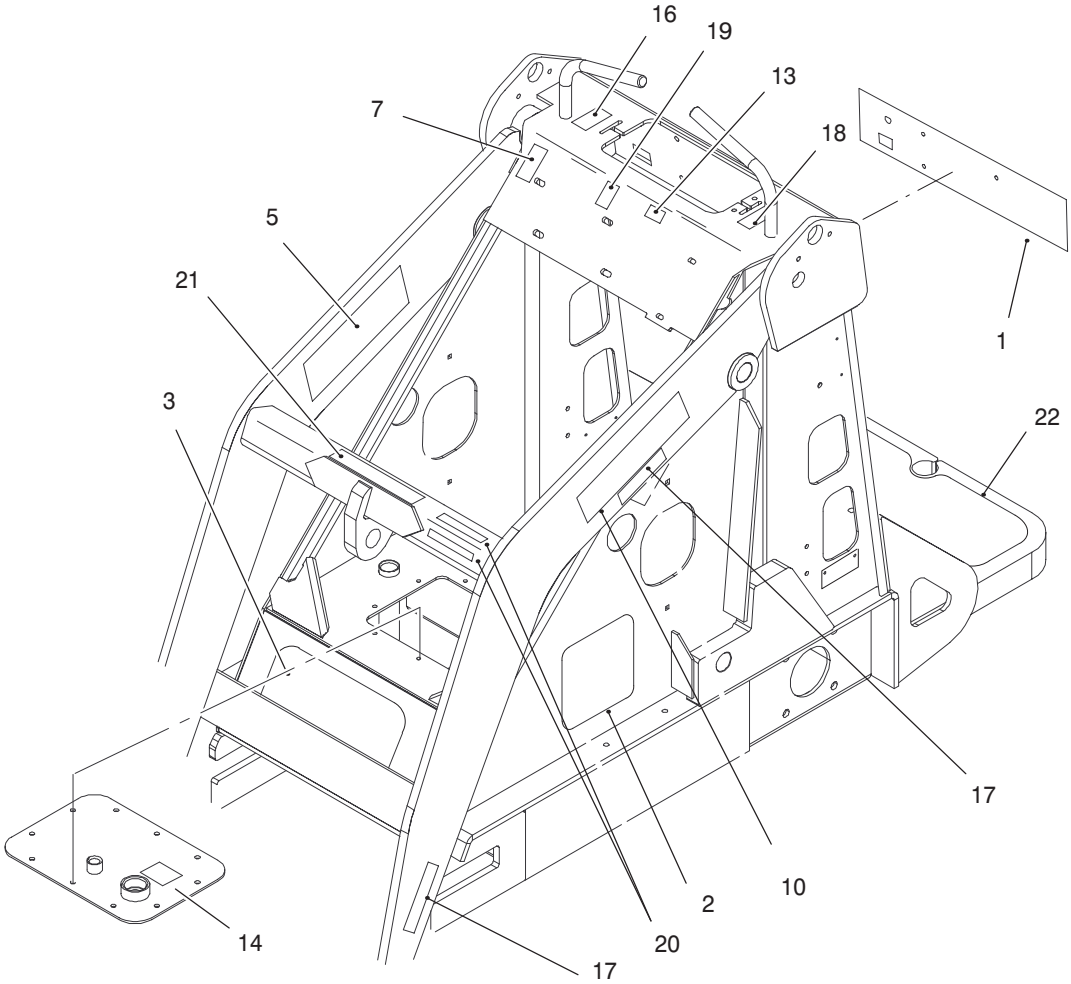

c–2829
Sheet No.:10

Decal Assembly

Ref. No.	Part No.	Qty.	Description
1	99–3157	1	Decal–Control Panel
2	100–8827	2	Decal – Side
3	100–8828	1	Decal – Front
5	98–9051	1	Decal – Danger
7	98–4677	1	Decal – Auxiliary Power
10	99–3166	2	Decal – Dingo 322
13	98–8220	1	Decal – Speed Limiter
14	85–4730	1	Decal – Hyd Oil Only
16	94–2551	1	Decal – Choke
17	100–6141	4	Decal – Pinch
18	98–8219	1	Decal – Throttle
19	98–8235	1	Decal – Selector
20	99–3088	2	Decal – No Riders
21	89–4682	1	Decal – Caution
22	98–9947	2	Tread – Foot

Ref. No.	Part No.	Qty.	Description

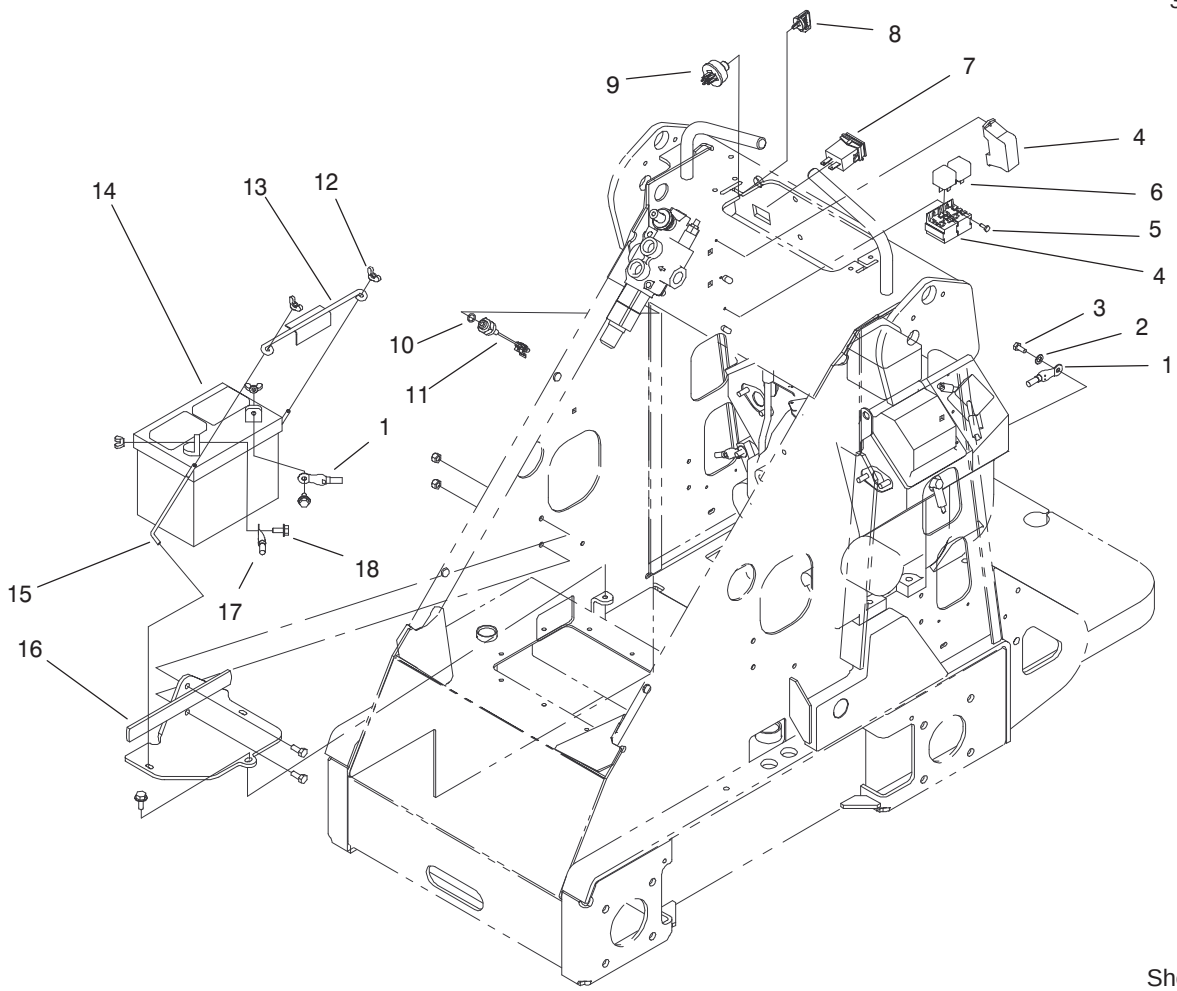

Sheet No.:11

Electrical Assembly

Ref. No.	Part No.	Qty.	Description
1	111075	1	Wire Assy
2	3255–8	1	Washer–Lock/Ext
3	33114–020	3	Screw–HH
4	99–3161	1	Harness – Electrical
5	32144–87	3	Screw–Thread Forming
6	98–7249	2	Relay–Spdt
7	94–4208	1	Hourmeter
8	63–8360	2	Key–Ignition w/Shield
9	111216	1	Assy Switch Ignition
10	237–42	3	O–Ring
11	72–4310	3	Switch
12	32103–22	4	Nut–Wing
13	113010	1	Battery Hold Down
14	94–1867	1	Battery
15	99–5027	2	Retainer – Battery
16	99–3060–03	1	Battery Mount
17	100–1712	1	Cable–Positive
18	3234–4	2	Screw–Flange
*99	32144–18	2	Screw–HH

Ref. No.	Part No.	Qty.	Description

* Not illustrated

Electrical Schematic

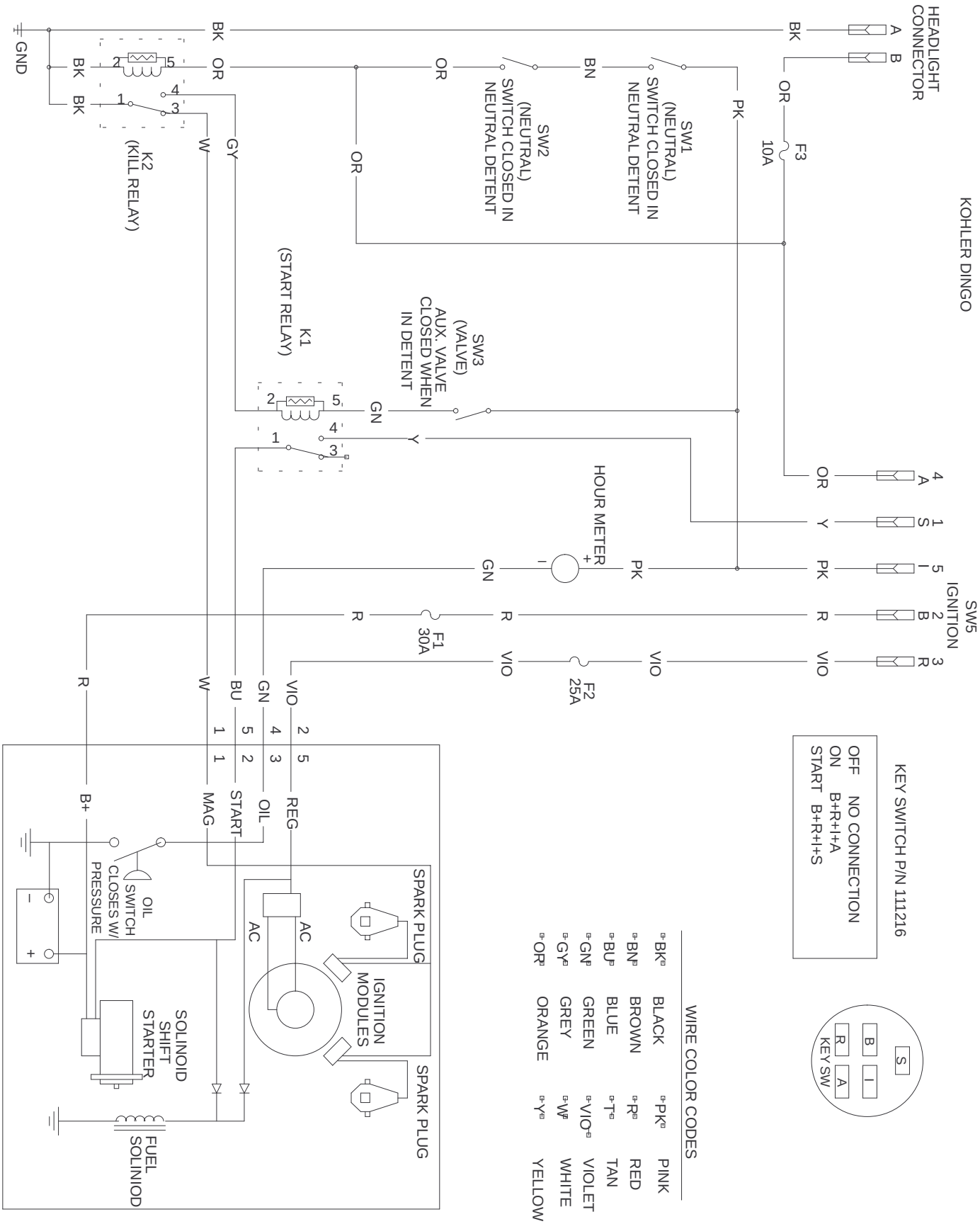

Sheet No.:11

Hydraulic Schematic

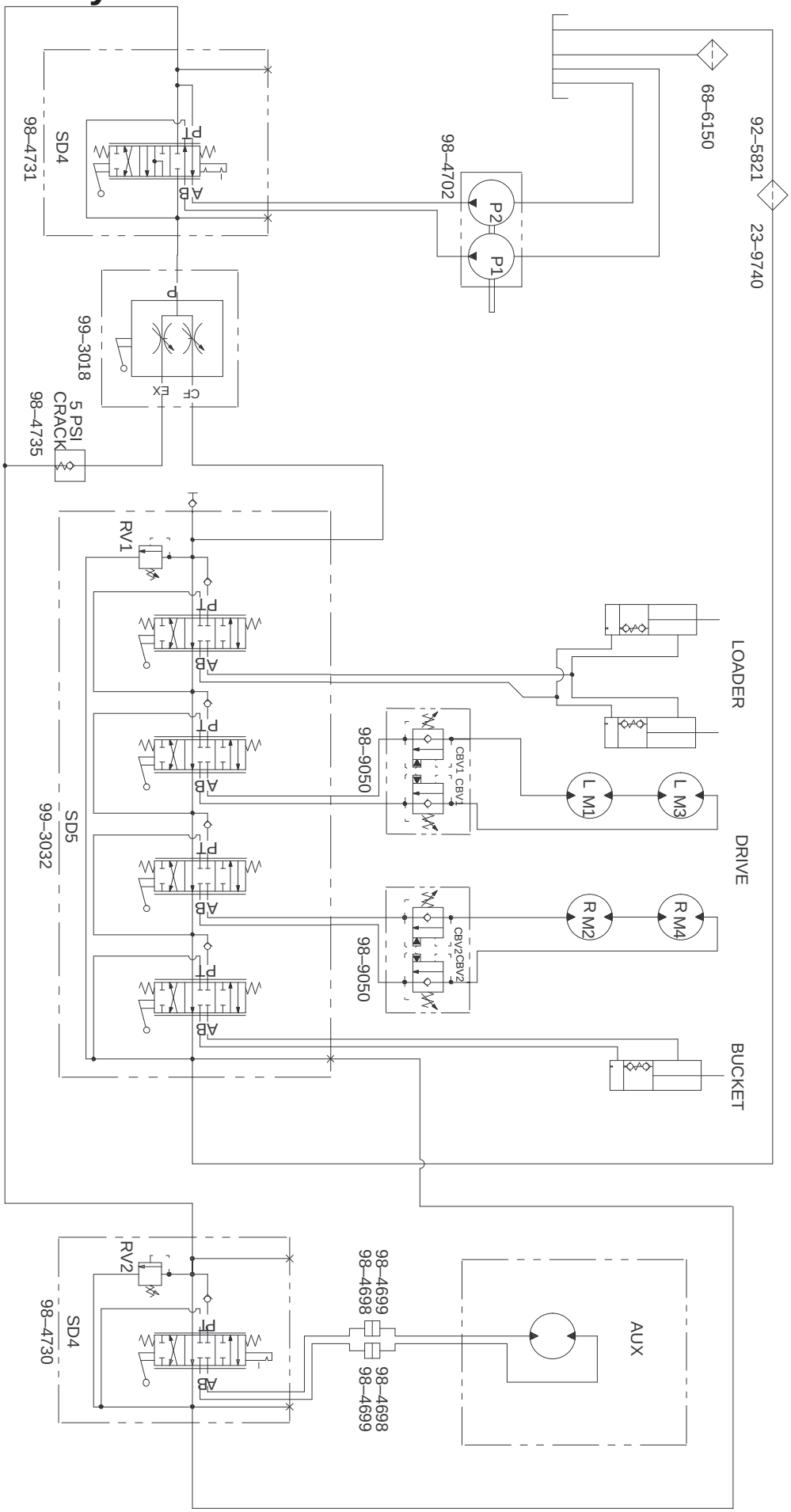

DISPLACEMENT AND PRESSURE CHART

COMPONENT	DISPLACEMENT		PRESSURE		FLOWRATE*	
COMPONENT	CU IN/REV	CU CM/REV	PSI	BARS	GPM	LPM
P1	0.55 CU IN	9 CC			8.4	31.8
P2	0.24 CU IN	4 CC			3.7	14.0
M1,M3	29.1 CU IN	476 CC				
M2,M4	29.1 CU IN	476 CC				
RV1			3000 PSI	207 BARS		
RV2			3000 PSI	207 BARS		
CBV1			1000 PSI	69 BARS		
CBV2			1000 PSI	69 BARS		

* FLOWRATE CALCULATED AT 3600 RPM AND 98% EFFICIENCY.

Sheet No.:12

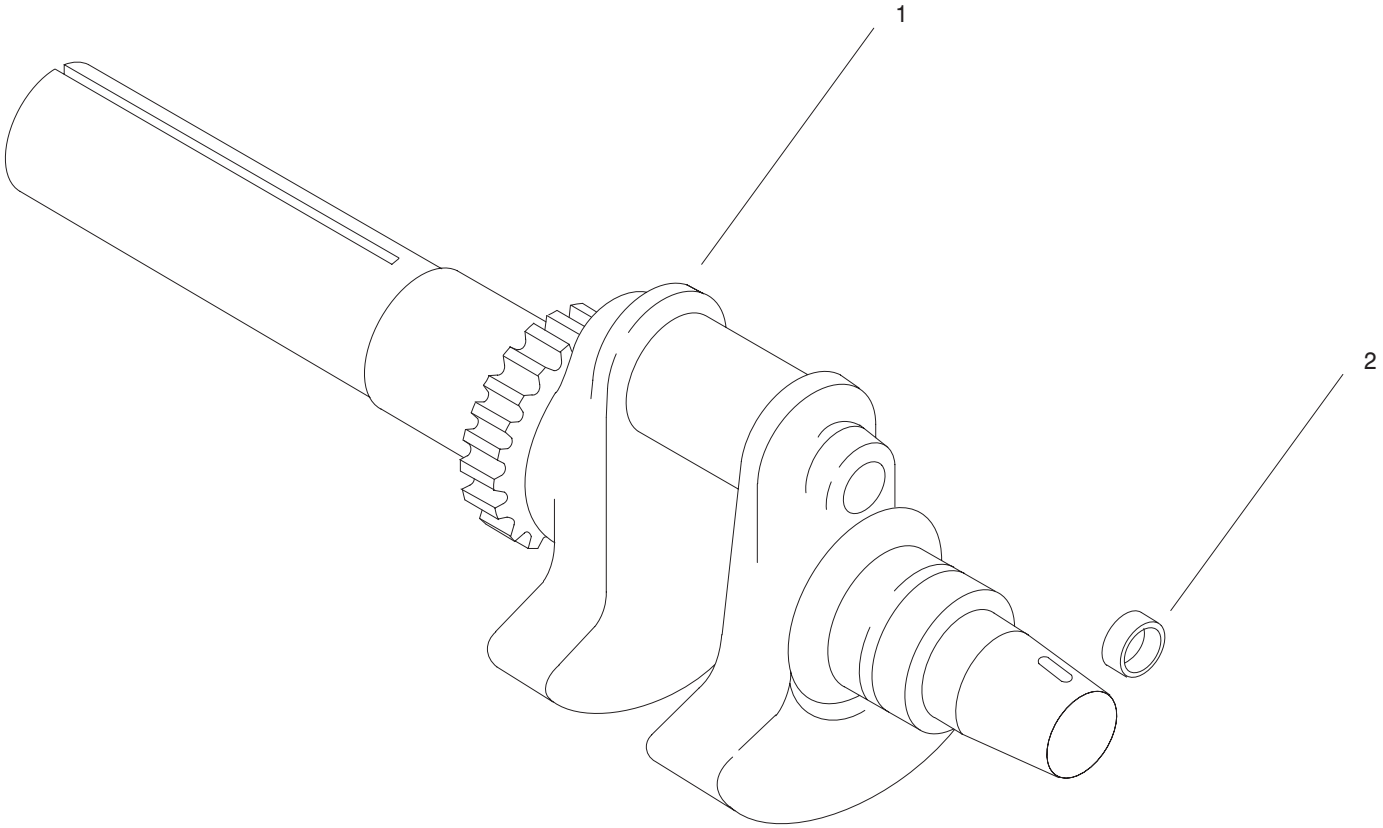

Group 1 – Crankshaft

Ref. No.	Part No.	Qty.	Description
1	24 014 90	1	Crankshaft (Includes 2)
2	52 139 09	1	Plug, cup

Ref. No.	Part No.	Qty.	Description

Obtain Parts From Kohler

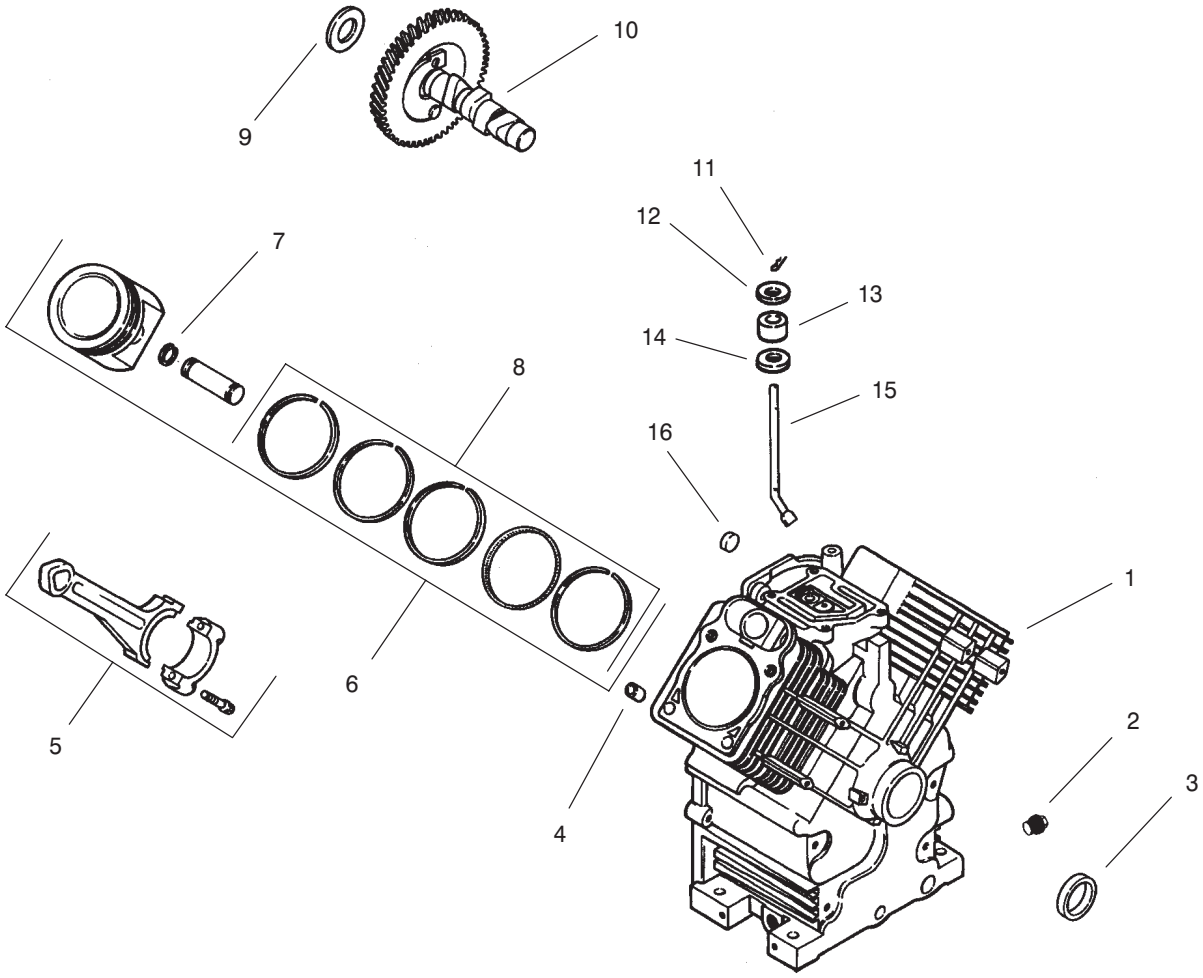

Group 2 – Crankcase

Ref. No.	Part No.	Qty.	Description
1		1	Cylinder Block (Use Miniblock 24 782 01)
2	52 139 02	2	Plug, drain
3	24 032 01	1	Seal, oil front
4	12 380 17	6	Pin, dowel locating
5	24 067 13	2	Connecting Rod (Std.)
	24 067 14	2	Connecting Rod (.25)
6	24 874 01	2	Piston w/Ring Set (Std.)
	24 874 02	2	Piston w/Ring Set (.25)
	24 874 03	2	Piston w/Ring Set (.50)
7	24 018 01	4	Retainer, piston pin
8	24 108 01	2	Ring Set (Std.)
	24 108 02	2	Ring Set (.25)
	24 108 03	2	Ring Set (.50)
9	12 422 09	A/R	Shim, camshaft – red
	12 422 13	A/R	Shim, camshaft – black
	12 422 07	A/R	Shim, camshaft – white
	12 422 08	A/R	Shim, camshaft – blue
	12 422 10	A/R	Shim, camshaft – yellow
	12 422 11	A/R	Shim, camshaft – green
	12 422 12	A/R	Shim, camshaft – gray
10	24 012 05	1	Camshaft

Ref. No.	Part No.	Qty.	Description
11	12 380 04	1	Pin, hitch
12	M–0631005	1	Washer, flat
13	12 032 01	1	Seal, governor cross shaft
14	X–25–102	1	Washer, plain
15	24 144 01	1	Shaft, governor cross
16	52 139 09	1	Plug, cup

Obtain Parts From Kohler

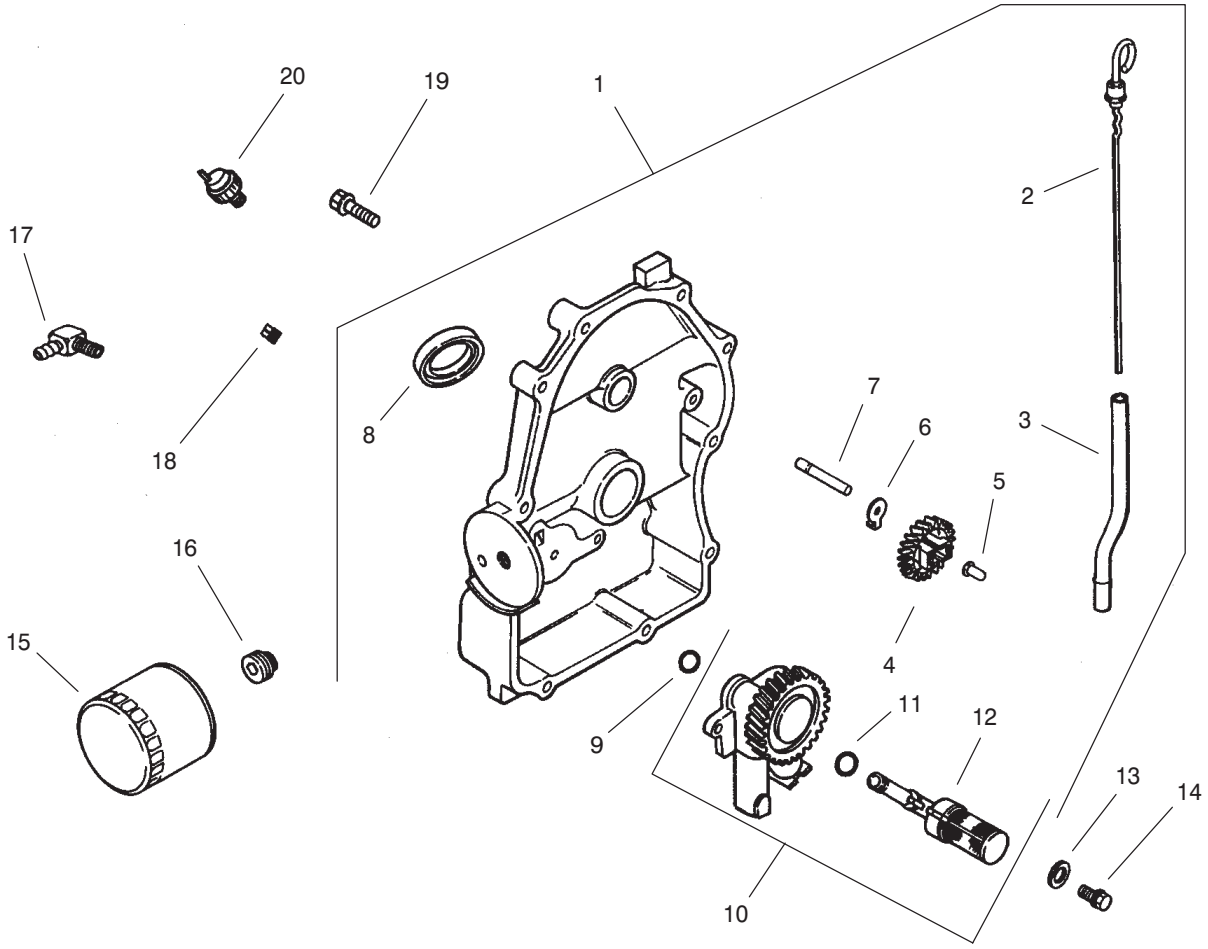

Group 3 – Oil Pan/Lubrication

Ref. No.	Part No.	Qty.	Description
1	24 009 82	1	Plate, closure assembly (Includes 2–12)
2	24 038 06	1	Dipstick
3	24 123 08	1	Tube, dipstick
4	24 043 12	1	Kit, governor gear (Includes 5)
5	12 380 01	1	Pin, governor regulating
6	52 448 02	1	Tab, locking
7	12 144 02	1	Shaft, governor gear
8	52 032 08	1	Seal, oil (PTO end)
9	24 153 08	1	O–Ring
10	24 393 10	1	Oil pump assembly (Includes 11,12)
11	24 153 01	1	O–Ring, oil pick–up
12	24 381 04	1	Pick–up, oil
13	M–0631005	2	Washer, plain 6 mm
14	M–0645025	2	Screw, hex. flange
15	52 050 02	1	Filter, oil
16	24 136 01	1	Nipple, oil filter
17	25 155 02	1	Connector
18	X–75–23	1	Plug, pipe
19	24 086 16	10	Screw, hex. flange
20	24 099 03	1	Switch, pressure

Ref. No.	Part No.	Qty.	Description

Obtain Parts From Kohler

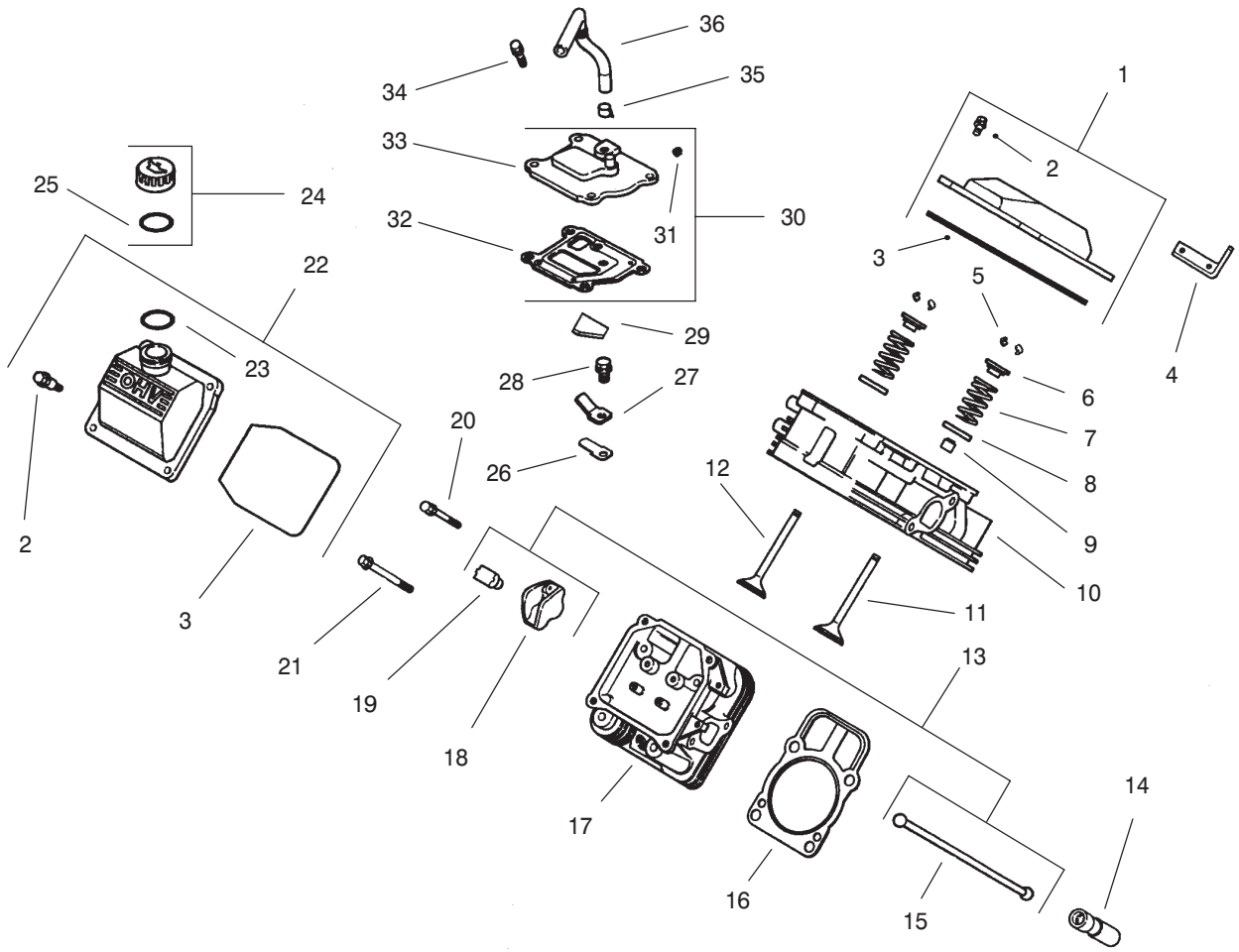

Group 4 – Head/Valve/Breather

Ref. No.	Part No.	Qty.	Description
1	24 755 74	1	Kit, valve cover – plain (Includes 2–3)
2	24 086 32	4	Screw, shoulder
3	24 153 16	1	O–Ring, valve cover
4	24 445 01	1	Strap, lifting
5	12 755 03	4	Kit, retainer
6	12 173 01	4	Cap, valve spring
7	24 089 02	4	Spring, valve
8	235011	4	Retainer, spring
9	24 032 05	2	Seal, valve stem
10	24 318 09	1	Head assembly, #1 cylinder
11	24 017 01	2	Valve, intake (Std.)
	24 017 02	2	Valve, intake (.25)
12	24 016 01	2	Valve, exhaust (Std.)
	24 016 02	2	Valve, exhaust (.25)
13	24 755 66	1	Kit, valve train (Includes 15,18,19)
14	12 351 02	4	Lifter, valve
15	24 411 05	4	Rod, push
16	24 041 08	2	Gasket, cylinder head
17	24 318 10	1	Head assembly, #2 cylinder
18	25 186 01	4	Arm, rocker
19	24 599 01	4	Pivot, rocker arm
20	M–0640034	4	Screw, hex. flange

Ref. No.	Part No.	Qty.	Description
21	12 086 16	8	Screw, hex. flange
22	24 755 75	1	Kit, valve cover – oil fill (Includes 2,3,23)
23	24 153 09	1	O–Ring
24	24 755 46	1	Kit, oil fill cap (Includes 25)
25	12 153 03	1	O–Ring, oil fill cap
26	24 402 03	1	Reed, breather
27	12 018 01	1	Retainer, breather reed
28	M–0545010	1	Screw, hex. flange
29	24 050 01	1	Filter, breather
30	24 033 01	1	Kit, breather (Includes 31–33)
31	X–75–23	1	Plug, allen head pipe
32	24 041 23	1	Gasket, breather
33	24 096 02	1	Cover, breather
34	M–0645020	4	Screw, hex. flange
35	X–426–9	1	Clamp, breather
36	24 326 06	1	Hose, breather

Obtain Parts From Kohler

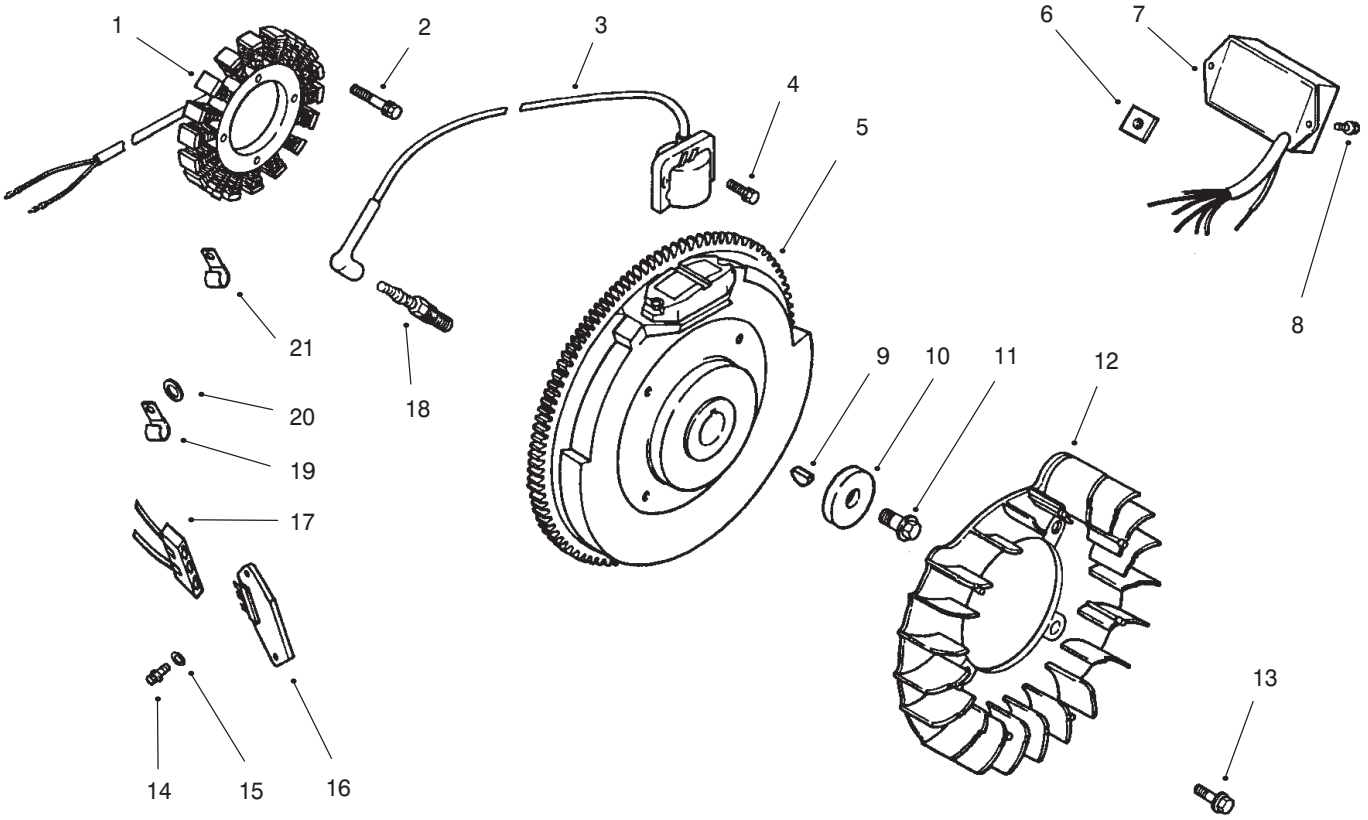

Group 5 – Ignition/Electrical

Ref. No.	Part No.	Qty.	Description
1	54 755 09	1	Kit, 15 amp stator (Incl. 24 126 71 bracket)
2	M–0548025	2	Screw, hex. cap
3	24 584 11	2	Module, ignition
4	M–0561025	4	Screw, hex. socket hd
5	24 025 02	1	Flywheel
6	24 100 02	2	Nut, plastic
7	24 584 09	1	Module, speed advance
8	24 086 41	2	Screw
9	X–42–15	1	Key
10	12 468 03	1	Washer, plain
11	12 086 14	1	Screw, hex. flange
12	24 157 03	1	Fan
13	25 086 47	4	Bolt, shoulder
14	24 086 18	2	Screw, phillips hd.
15	X–25–92	2	Washer, plain
16	25 403 03	1	Rectifier–regulator
17	236602	1	Connector
18	12 132 02	2	Spark Plug
19	47 154 01	1	Clip, cable
20	X–25–63	1	Washer, plain
21	48 154 02	1	Clip, cable
*	25 518 28	1	Lead, black, (4” – 18 gauge – insulated grip barrel eyelet terminals)
*	24 176 42	1	Harness, wiring
*	24 126 71	1	Bracket, stator wire
*	X–22–11	1	Washer, lock
*	X–25–63	1	Washer, plain

Obtain Parts From Kohler
* Not Illustrated

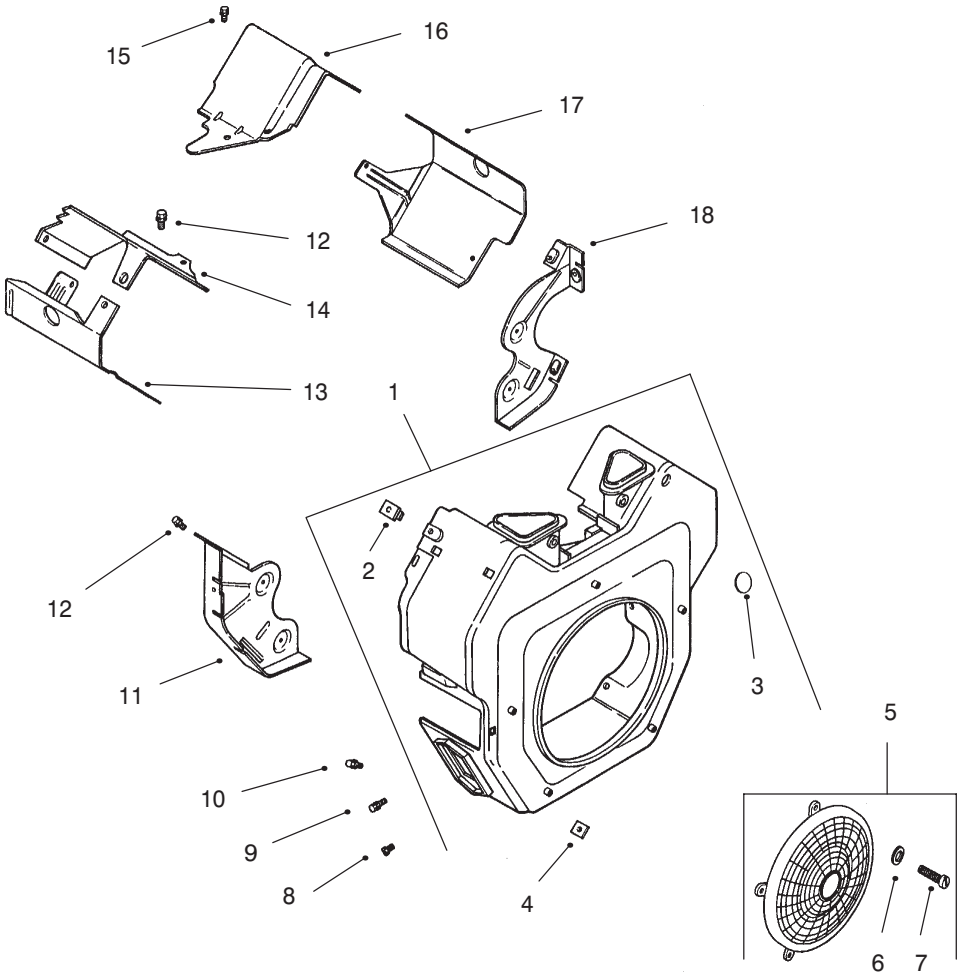

Group 6 – Blower Housing & Baffles

Ref. No.	Part No.	Qty.	Description
1	24 027 40	1	Housing, blower (Includes 2–5)
2	24 100 02	2	Nut, plastic
3	25 139 16	1	Button plug
4	24 100 01	2	Nut, plastic
5	24 755 81	1	Kit, Fixed Gurard (Includes 6&7)
6	24 468 10	5	Washer, plain
7	24 086 35	5	Screw, panhead
8	M–0551016	1	Screw, hex. flange
9	M–0545016	5	Screw, hex. flange
10	M–0545020	2	Screw, hex. flange
11	24 146 02	1	Plate, backing – #2 side
12	M–0645016	6	Screw, hex. flange
13	24 063 20	1	Baffle, cyl. barrel–#2 side
14	24 063 17	1	Baffle, valley – #2 side
15	M–0545010	2	Screw, hex. flange
16	24 063 24	1	Baffle, valley – #1 side
17	24 063 08	1	Baffle, cyl. barrel–#1 side
18	24 146 08	1	Plate, backing – #1 side
*	24 113 62	1	Decal, HP

Ref. No.	Part No.	Qty.	Description
*	25 113 21	1	Decal, Pro

Obtain Parts From Kohler
* Not Illustrated

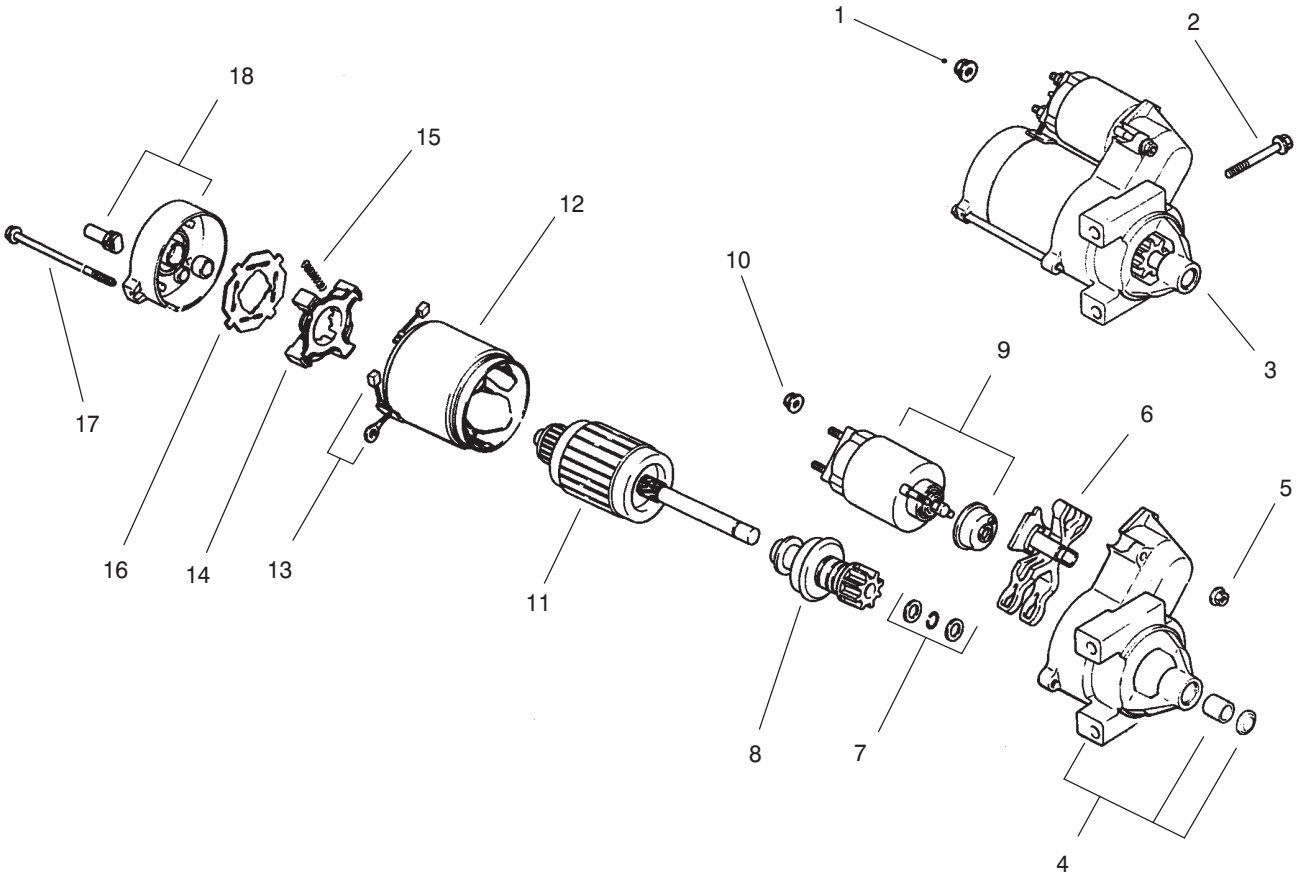

Group 7 – Starting System

Ref. No.	Part No.	Qty.	Description
1	M–0841080	1	Nut, hex flange
2	M–0839080	2	Screw, hex. flange
3	24 098 01	1	Starter, solenoid shift assembly (Incl. 4–18)
4	24 081 04	1	Drive, end cap
5	52 100 10	2	Nut, starter
6	12 090 10	1	Lever, starter drive
7	24 755 84	1	Kit, starter repair
8	12 239 01	1	Drive, pinion
9	52 435 02	1	Solenoid
10	52 100 09	1	Nut, starter
11	12 170 04	1	Armature, starter
12	12 471 01	1	Frame
13	52 221 01	1	Kit, brush & spring (Includes 15)
14	52 323 03	1	Holder, brush
15	52 089 09	4	Spring, brush
16	52 168 01	1	Insulator
17	52 211 05	2	Bolt, thru
18	24 301 01	1	Commutator, end cap

Ref. No.	Part No.	Qty.	Description

Obtain Parts From Kohler

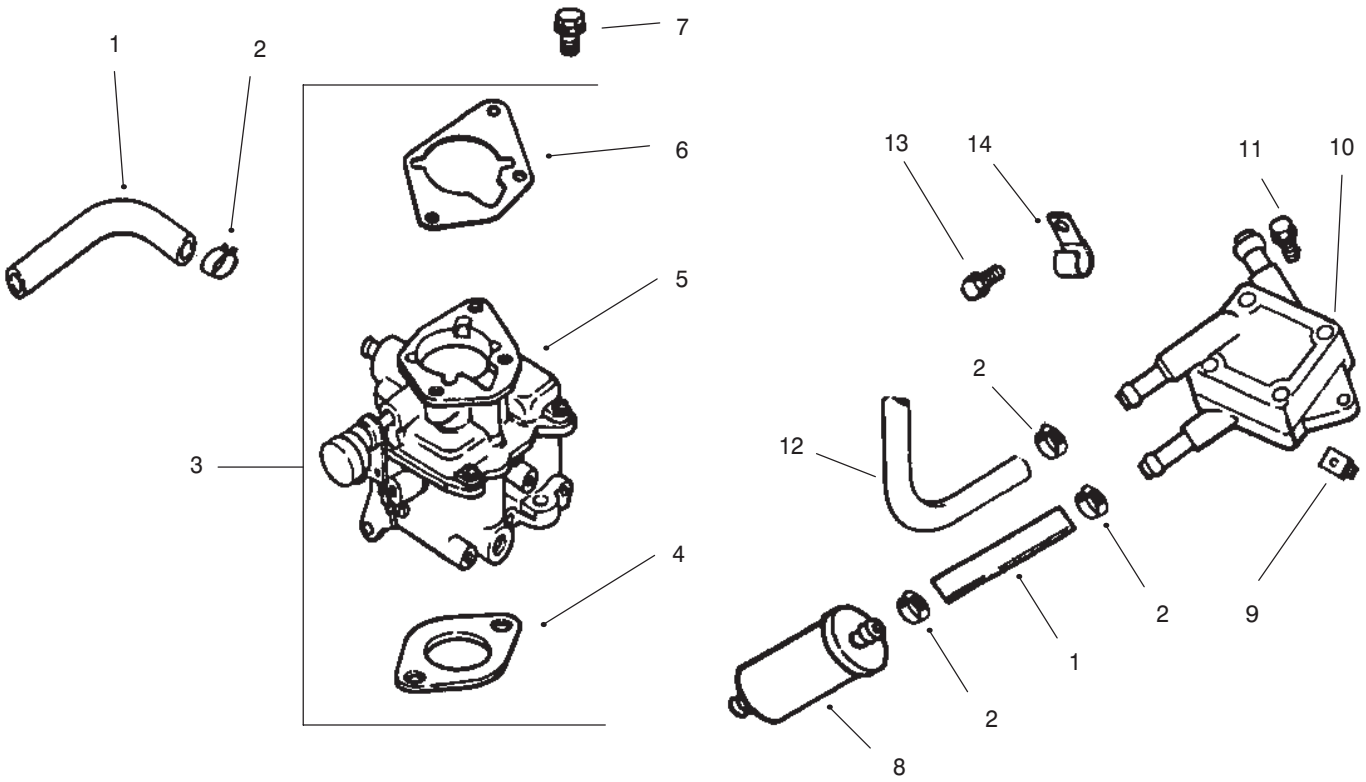

Group 8 – Fuel System

Ref. No.	Part No.	Qty.	Description
1	25 353 10	2	Line, fuel – 9”
2	X–426–9	6	Clamp, hose
3	24 853 43	1	Kit, carburetor w/gasket (Includes 4–6)
4	24 041 06	1	Gasket, air cleaner base
†5	24 053 43	1	Carburetor assembly
6	24 041 17	1	Gasket, carburetor
7	M–0651030	2	Screw, hex. flange
8	24 050 02	1	Filter, fuel
9	24 100 01	2	Nut, plastic
10	24 393 04	1	Pump, fuel – pulse
11	24 086 12	2	Screw, hex. cap
12	24 353 04	1	Line, fuel 17”
13	M–0650012	1	Screw, hex. flange
14	47 154 01	1	Clip, cable

Ref. No.	Part No.	Qty.	Description

Obtain Parts From Kohler
†For information only; Not available separately.

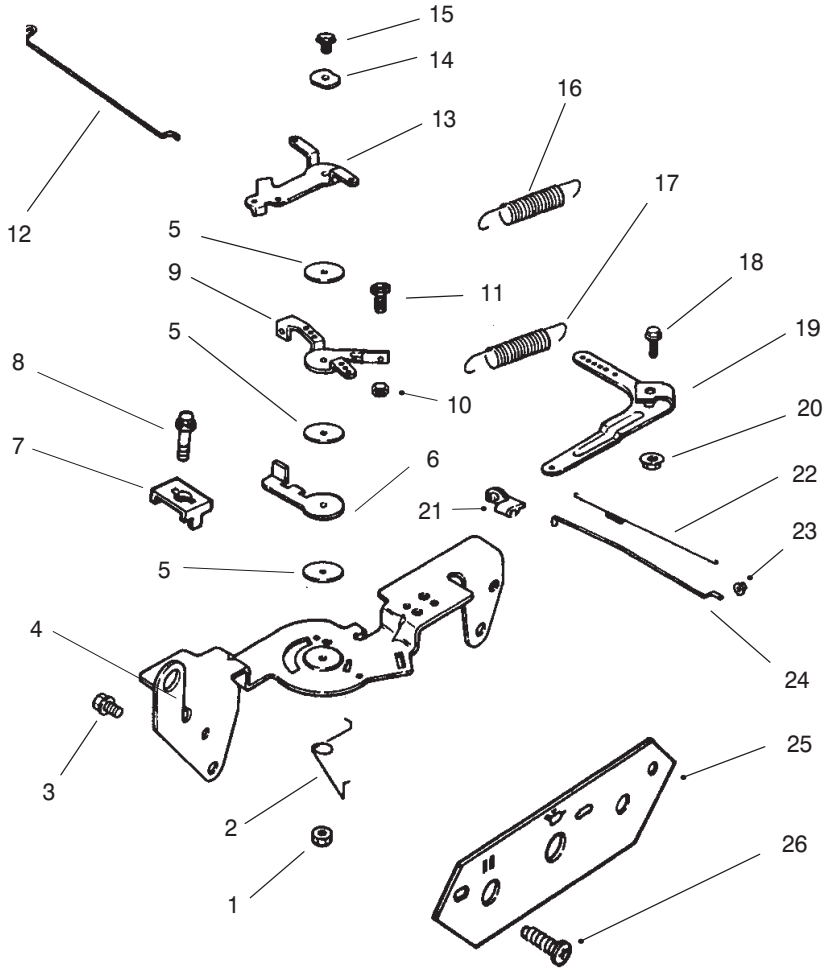

Group 9 – Engine Controls

Ref. No.	Part No.	Qty.	Description
1	M–0547050	1	Nut, hex. lock
2	24 089 03	1	Spring, choke return
3	M–0645016	4	Screw, hex. flange
4	24 126 56	1	Bracket, control
5	24 468 01	3	Washer, plain
6	24 090 07	1	Lever, throttle actuator
7	12 237 01	2	Clamp, cable
8	M–0545016	2	Screw, hex. flange
9	24 090 03	1	Lever, throttle control
10	M–0446030	1	Nut, hex
11	M–0401030	1	Screw, hex. cap
12	24 079 02	1	Linkage, choke
13	24 090 05	1	Lever, choke
14	41 468 03	1	Washer, spring
15	M–0545020	1	Screw, hex. flange
16	24 089 38	1	Spring, throttle limiter
17	24 089 15	1	Spring, governor
18	SM–0642025	1	Screw, hex. flange
19	24 090 14	1	Lever, governor
20	M–0641060	1	Nut, hex. flange
21	25 158 11	1	Bushing, linkage retaining
22	24 089 01	1	Spring, linkage
23	25 158 08	1	Bushing, linkage retaining
24	24 079 01	1	Linkage, throttle

Ref. No.	Part No.	Qty.	Description
25	24 378 01	1	Panel, control
26	24 086 06	1	Screw, phillips

Obtain Parts From Kohler

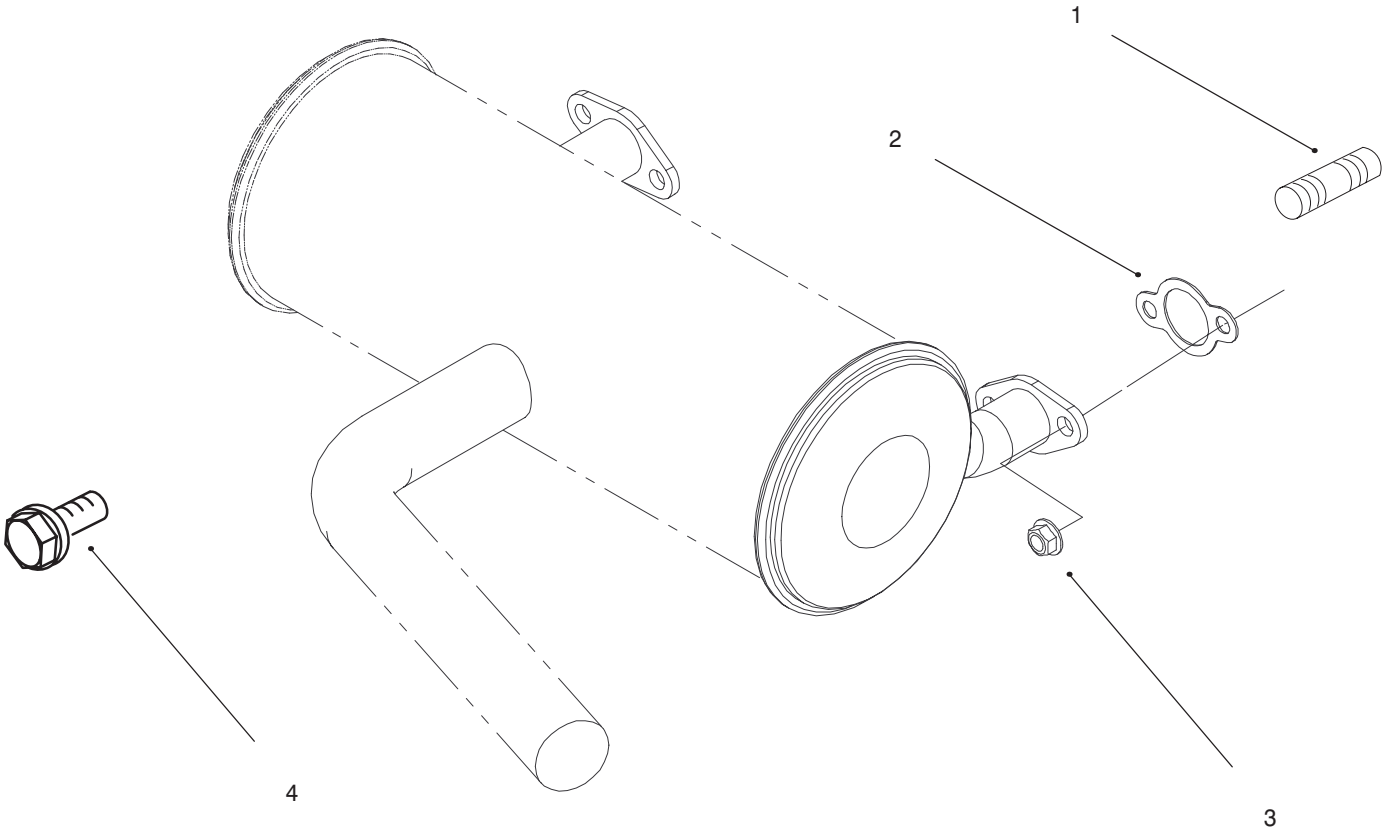

Group 11 – Exhaust

Ref. No.	Part No.	Qty.	Description
1	25 072 04	4	Stud
2	93–0350	2	Gasket, exhaust
3	M–0841080	4	Nut, hex flange
4	M–0839020	2	Screw, hex. flange
*	24 755 03	1	Gasket Set

Ref. No.	Part No.	Qty.	Description

Obtain Parts From Kohler
* Not Illustrated

TORO®