Form No. 3437-861 Rev A

TORO®

Count on it.

Operator's Manual

27-inch Verticutter

Reelmaster® 7000-D Cutting Unit

Model No. 03731—Serial No. 404000000 and Up

Register at www.Toro.com.
Original Instructions (EN)

CE

3437-861 A

This product complies with all relevant European directives. For details, please see the Declaration of Incorporation (DOI) at the back of this publication.

Model No.	
Serial No.	

Introduction

The verticutter kit is mounted on a ride-on machine and is intended to be used by professional, hired operators in commercial applications. It is primarily designed for verticutting grass on well-maintained lawns in parks, sports fields, and on commercial grounds. Using this product for purposes other than its intended use could prove dangerous to you and bystanders.

Read this information carefully to learn how to operate and maintain your product properly and to avoid injury and product damage. You are responsible for operating the product properly and safely.

Visit www.Toro.com for product safety and operation training materials, accessory information, help finding a dealer, or to register your product.

Whenever you need service, genuine Toro parts, or additional information, contact an Authorized Service Dealer or Toro Customer Service and have the model and serial numbers of your product ready. Figure 1 identifies the location of the model and serial numbers on the product. Write the numbers in the space provided.

Important: **With your mobile device, you can scan the QR code on the serial number plate (if equipped) to access warranty, parts, and other product information.**

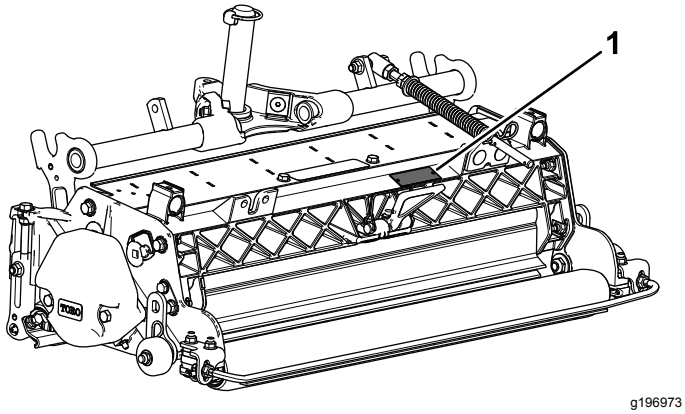

g196973

Figure 1

1. Model and serial number location

This manual identifies potential hazards and has safety messages identified by the safety-alert symbol (Figure 2), which signals a hazard that may cause serious injury or death if you do not follow the recommended precautions.



g000502

Figure 2

Safety-alert symbol

This manual uses 2 words to highlight information. **Important** calls attention to special mechanical information and **Note** emphasizes general information worthy of special attention.

Contents

Safety 3
- General Safety 3
- Cutting Unit Safety 3
- Blade Safety 3
- Safety and Instructional Decals 4

Setup 5
- 1 Inspecting the Verticutter 6
- 2 Installing the Transport Rollers 6
- 3 Installing the O-ring and the Grease Fitting 7
- 4 Installing the Turf-Compensation Spring 7
- 5 Adjusting the Verticutter 8
- 6 Mounting the Verticutter Reel 8

Product Overview 9
- Specifications 9
- Attachments/Accessories 9

Operation 9
- Training Period 9
- Adjusting the Verticutter 9
- Operating Tips 11

Maintenance 12
- Using the Kickstand When Tipping the Cutting Unit 12
- Lubricating the Verticutter 12
- Removing the Verticutter Blades from the Shaft 13
- Installing the Verticutter Blades 13
- Servicing the Roller 14

© 2020—The Toro® Company

8111 Lyndale Avenue South
Bloomington, MN 55420

Contact us at www.Toro.com.
Printed in the USA

All Rights Reserved

Safety

This machine has been designed in accordance with EN ISO 5395 and ANSI B71.4–2017.

General Safety

This product is capable of amputating hands and feet. Always follow all safety instructions to avoid serious personal injury.

- Read and understand the contents of this *Operator's Manual* before starting the machine.
- Use your full attention while operating the machine. Do not engage in any activity that causes distractions; otherwise, injury or property damage may occur.
- Remove all debris or other objects that might be picked up and thrown by the blades of the cutting unit. Keep all bystanders away from the working area.
- Do not put your hands or feet near moving components of the machine.
- Do not operate the machine without all guards and other safety protective devices in place and functioning properly on the machine.
- Keep clear of any discharge opening.
- Keep bystanders and children out of the operating area. Never allow children to operate the machine.
- Before you leave the operator's position, do the following:
  - Park the machine on a level surface.
  - Lower the cutting unit(s).
  - Disengage the drives.
  - Engage the parking brake (if equipped).
  - Shut off the engine and remove the key.
  - Wait for all movement to stop.
  - If the verticutter blades strike a solid object or the unit vibrates abnormally, stop and shut off the engine. Check the verticutter for damaged parts. Repair any damage before starting and operating the verticutter.
  - Ensure that the verticutters are in safe operating condition by keeping all hardware tight.

Improperly using or maintaining this machine can result in injury. To reduce the potential for injury, comply with these safety instructions and always pay attention to the safety-alert symbol ⚠, which means Caution, Warning, or Danger—personal safety instruction. Failure to comply with these instructions may result in personal injury or death.

Cutting Unit Safety

- The cutting unit is only a complete machine when installed on a traction unit. Read the traction unit *Operator's Manual* carefully for complete instructions on the safe use of the machine.
- Stop the machine, remove the key (if equipped), and wait for all movement to stop before inspecting the attachment after striking an object or if there is an abnormal vibration in the machine. Make all necessary repairs before resuming operation.
- Keep all parts in good working condition and all hardware tightened. Replace all worn or damaged decals.
- Use only accessories, attachments, and replacement parts approved by Toro.

Blade Safety

A worn or damaged blade can break, and a piece of the blade could be thrown toward you or bystanders, resulting in serious personal injury or death.

- Inspect the blade periodically for wear or damage.
- Use care when checking the blades. Wrap the blades or wear gloves, and use caution when servicing the blades. Only replace or sharpen the blades; never straighten or weld them.
- On multi-bladed machines, take care as rotating 1 blade can cause other blades to rotate.

Safety and Instructional Decals

Safety decals and instructions are easily visible to the operator and are located near any area of potential danger. Replace any decal that is damaged or missing.

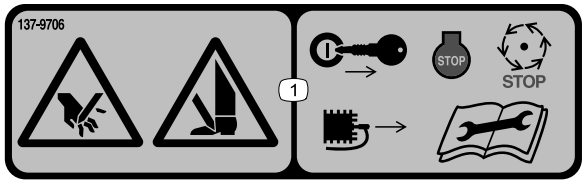

decal137-9706

137-9706

1. Cutting hazard of the hand or foot—shut off the engine, remove the key or disconnect the spark plug, wait for all moving parts to stop, and read the *Operator's Manual* before performing maintenance.

Setup

Loose Parts

Use the chart below to verify that all parts have been shipped.

Procedure	Description	Qty.	Use
1	Verticutter	1	Inspect the verticutter.
2	Transport roller assembly Cotter pin	2 2	Install the transport rollers.
3	O-ring Grease fitting	1 1	Install the O-ring and the grease fitting.
4	Turf-compensation assembly Long bolt Carriage bolt Flange locknut Flange nut	1 1 2 3 1	Install the turf-compensation spring assembly.
5	No parts required	–	Adjust the verticutter.
6	No parts required	–	Mount the verticutter reel.

Media and Additional Parts

Description	Qty.	Use
Operator's Manual Parts Catalog (not included)—refer to the included postcard for information on obtaining the Parts Catalog	1 –	Review the material and save it in an appropriate place.

Note: Determine the left and right sides of the machine from the normal operating position.

1

Inspecting the Verticutter

Parts needed for this procedure:

1	Verticutter

Procedure

After the verticutter is removed from the box, inspect the following:

1. Check each end of the reel for grease. Grease should be visibly evident in the reel bearings and in the internal splines of the reel shaft.
2. Ensure that all hardware is securely tightened.
3. Make sure that the carrier frame suspension operates freely and does not bind when moved back and forth.

2

Installing the Transport Rollers

Parts needed for this procedure:

2	Transport roller assembly
2	Cotter pin

Procedure

Secure a transport roller bracket to each side plate pin with a cotter pin (Figure 3).

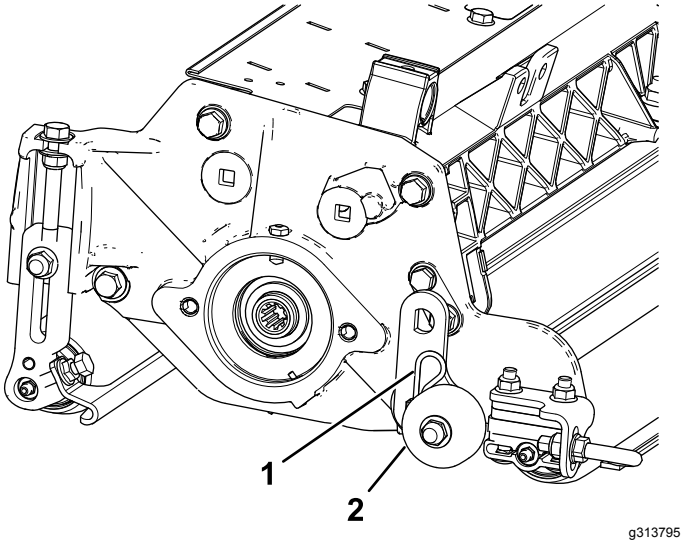

Figure 3

1. Cotter pin
2. Transport roller assembly

Note: The roller should be positioned to the rear of the verticutter.

3

Installing the O-ring and the Grease Fitting

Parts needed for this procedure:

1	O-ring
1	Grease fitting

Procedure

The grease fitting must be installed on the reel motor side of the verticutter. Use the following diagram to determine the position of each reel motor (Figure 4).

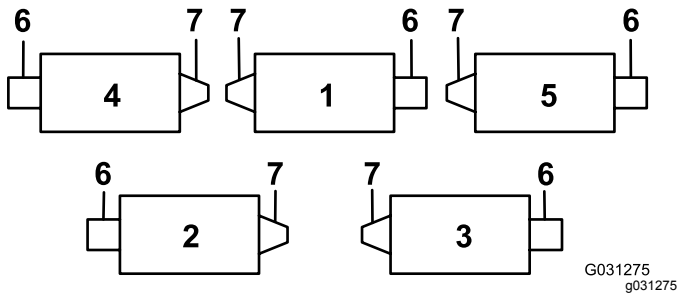

Figure 4

1. Verticutter 1
2. Verticutter 2
3. Verticutter 3
4. Verticutter 4
5. Verticutter 5
6. Reel motor
7. Weight

1. Remove and discard the setscrew on the reel-motor side plate (Figure 5).

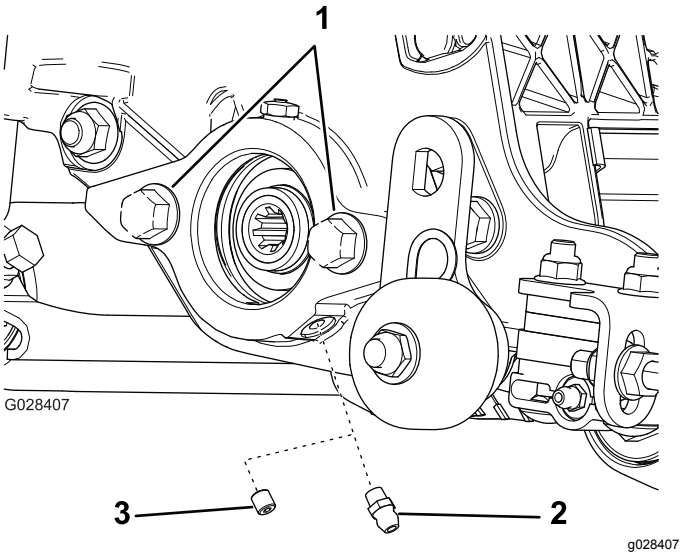

Figure 5

1. Bolts
2. Straight grease fitting (install)
3. Setscrew (remove and discard)

2. Install the straight grease fitting (Figure 5).
3. For verticutter 2 and verticutter 4 locations (Figure 4), move the end weight to the opposite side of the cutting unit.
4. If there are no bolts on the reel-motor side plate, install them (Figure 5).
5. Install the O-ring on the reel motor (Figure 6).

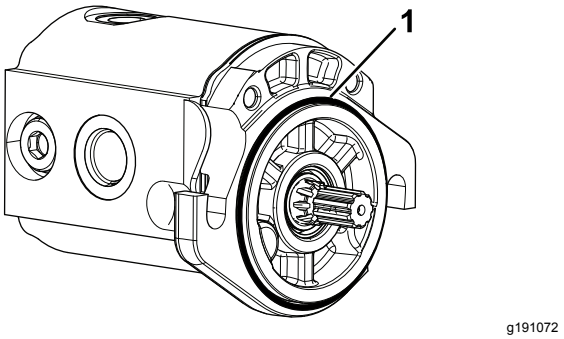

Figure 6

1. O-ring

4

Installing the Turf-Compensation Spring

Parts needed for this procedure:

1	Turf-compensation assembly
1	Long bolt
2	Carriage bolt
3	Flange locknut
1	Flange nut

Procedure

Install the turf compensation spring assembly on the same side as the reel motor (Figure 4 and Figure 7).

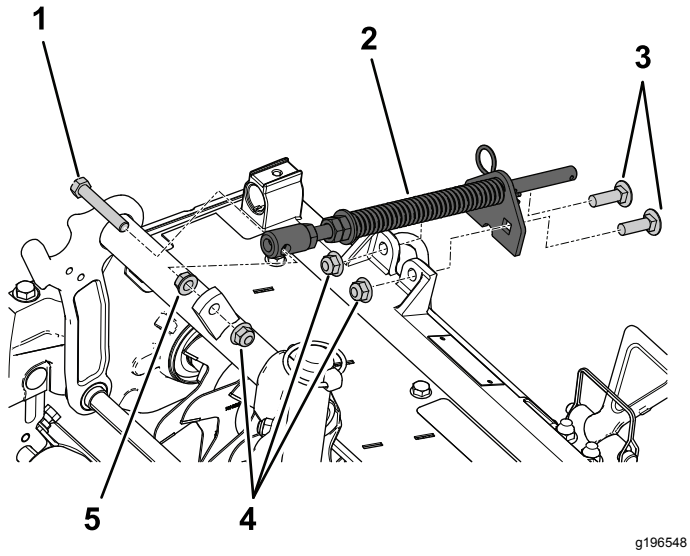

Figure 7

1. Long bolt
2. Compensation spring assembly
3. Carriage bolts
4. Flange locknuts
5. Flange nut

5

Adjusting the Verticutter

No Parts Required

Procedure

Refer to Adjusting the Verticutter (page 9).

6

Mounting the Verticutter Reel

No Parts Required

Procedure

Important: **When lowering the verticutter reels, care must be taken to prevent damage to the reel blades due to contact with a concrete floor or a paved surface. Lower the transport rollers before lowering the verticutters to a concrete floor or a paved surface.**

Verticutter reels are mounted to the traction unit the same way reel cutting units are. Refer to the traction unit *Operator's Manual* for mounting instructions.

Install the reel motor and grease the side plate until excess grease oozes out of the relief valve; refer to Lubricating the Verticutter (page 12).

Product Overview

Specifications

Net weight	64 kg (140 lb)

Attachments/Accessories

A selection of Toro approved attachments and accessories is available for use with the machine to enhance and expand its capabilities. Contact your Authorized Service Dealer or authorized Toro distributor or go to www.Toro.com for a list of all approved attachments and accessories.

To ensure optimum performance and continued safety certification of the machine, use only genuine Toro replacement parts and accessories. Replacement parts and accessories made by other manufacturers could be dangerous, and such use could void the product warranty.

Operation

Training Period

Before operating the verticutter reels, evaluate the performance of the reel at the desired setting. Operate in a clear, unused area to determine whether the desired results will be achieved. Make adjustments as necessary.

Adjusting the Verticutter

Adjusting the Blade Depth

Note: The maximum recommended blade penetration depth is 6 mm (1/4 inch).

1. Place the verticutter reel on a level surface.
2. Place 2 gauge bars, which have the desired depth of blade penetration below the ground, under the front and rear rollers of the verticutter reel (on each end of the reel) (Figure 8).

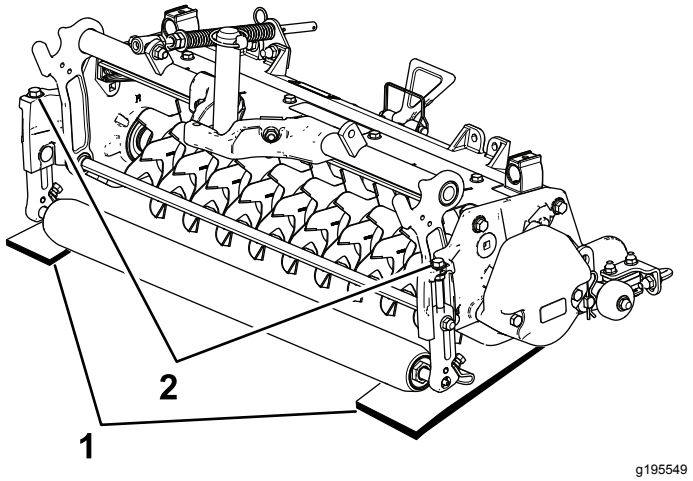

Figure 8

1. Gauge bars
2. Adjusting bolts

Note: The verticutter blades must not touch the gauge bars.

3. Turn the adjusting bolt on each height-of-cut bracket (Figure 8) so that the verticutter blades come in contact with the level surface on both ends.

Note: As the verticutter blades wear, the diameter of the reel will decrease and the depth setting will change. Check the depth setting periodically to ensure that the desired setting is achieved.

Adjusting the Rear Grass Shield

Note: When operating in turf conditions where there is excessive debris or thatch, open the rear discharge shield to help allow the debris to discharge from the reel.

1. Loosen the bolts on the pivot of the grass shield (Figure 9).

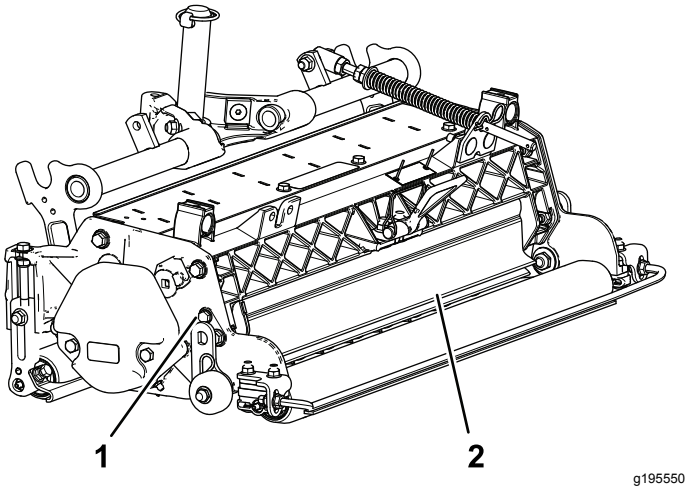

Figure 9

1. Pivot bolt
2. Rear grass shield

2. Rotate the grass shield to the desired setting, and tighten the bolts (Figure 9).

⚠ CAUTION

Thrown debris could cause personal injury.

Do not open the rear shield so that it is higher than level to ground.

Adjusting the Roller Scrapers

1. Loosen the flange nuts that secure the roller scrapers (Figure 10).

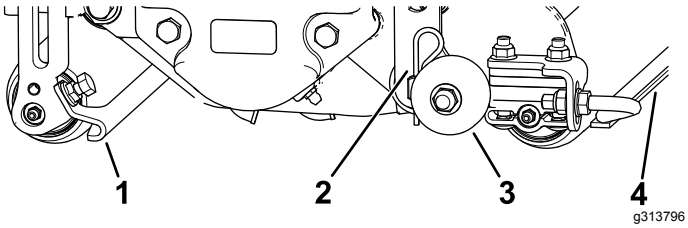

Figure 10

1. Front roller scraper
2. Cotter pin
3. Transport roller
4. Rear roller scraper

2. Move the scraper rods in or out to attain 0.0 to 0.75 mm (0.0 to 0.03 inch) clearance between the scraper and the roller.
3. Ensure that the scraper rod is parallel to the roller and to the level surface.
4. Tighten the flange nuts to lock the adjustment.

Adjusting the Transport Rollers

Before the verticutters are lowered to the shop floor or removed from the traction unit, lower the transport rollers (Figure 10) to protect the blades from hard surface contact.

1. Remove the cotter pin that secures the transport roller bracket to the side plate pin.
2. Position the transport roller as follows:
   - Lower the roller bracket before the verticutter is lowered to the shop floor.
   - Raise the roller bracket after the verticutter is raised to the operating position.
3. Secure the transport roller bracket to the side plate pin with the cotter pin.
4. Repeat the procedure on the opposite end of the verticutter.

Adjusting the Cutting-Unit Steering

Increasing the Steering for the Rear Cutting Units

Increase the steering on the rear cutting units by removing the 2 pivot spacers, hex socket screws, and flange locknuts (Figure 11) from the carrier frames of the rear cutting units (cutting units 2 and 3); refer to Figure 12.

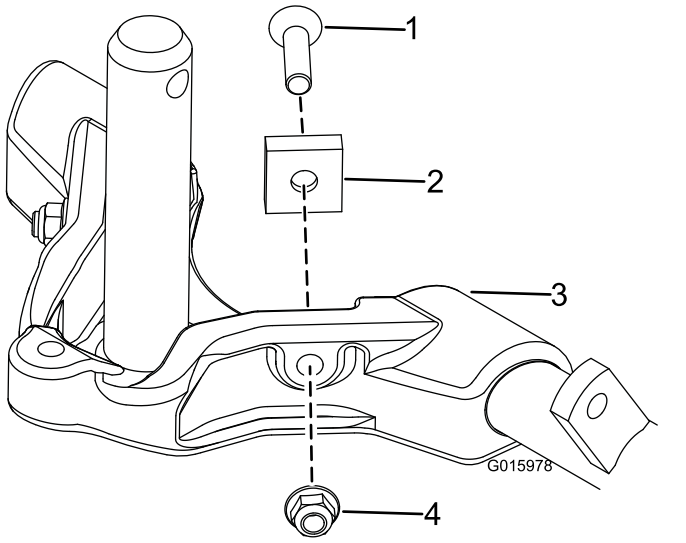

Figure 11

1. Hex socket screw
2. Pivot spacer
3. Carrier frame
4. Flange locknut

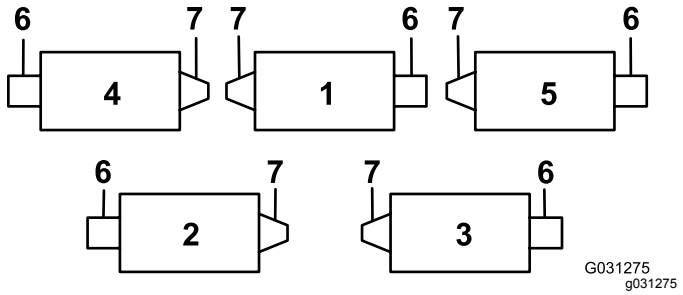

Figure 12

1. Cutting unit 1
2. Cutting unit 2
3. Cutting unit 3
4. Cutting unit 4
5. Cutting unit 5
6. Reel motor
7. Weight

Locking the Steering

To lock (fix) the steering on the cutting units, secure the pivot yoke to the carrier frame with the snapper pin (Figure 13).

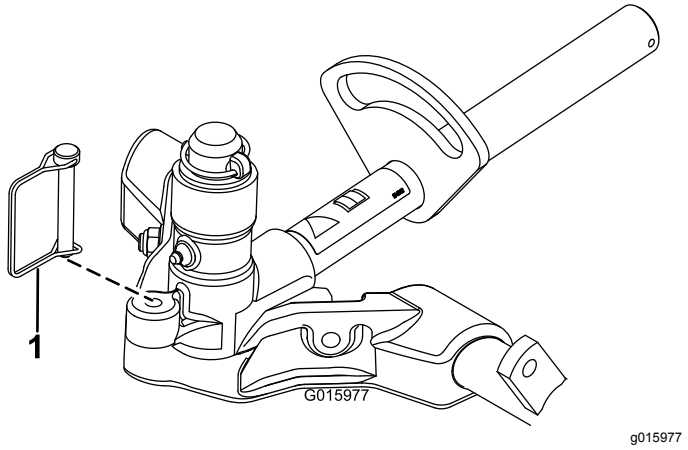

Figure 13

1. Snapper pin

Note: Fixed steering is recommended when cutting side hills.

Adjusting the Turf-Compensation Settings

The turf-compensation spring transfers the weight from the front to the rear roller. This helps to reduce a wave pattern in the turf, also known as marcelling or bobbing.

Important: **Make the spring adjustments with the cutting unit mounted to the traction unit, pointing straight ahead and lowered to the shop floor.**

1. Make sure that the hairpin cotter is installed in the rear hole in the spring rod (Figure 14).

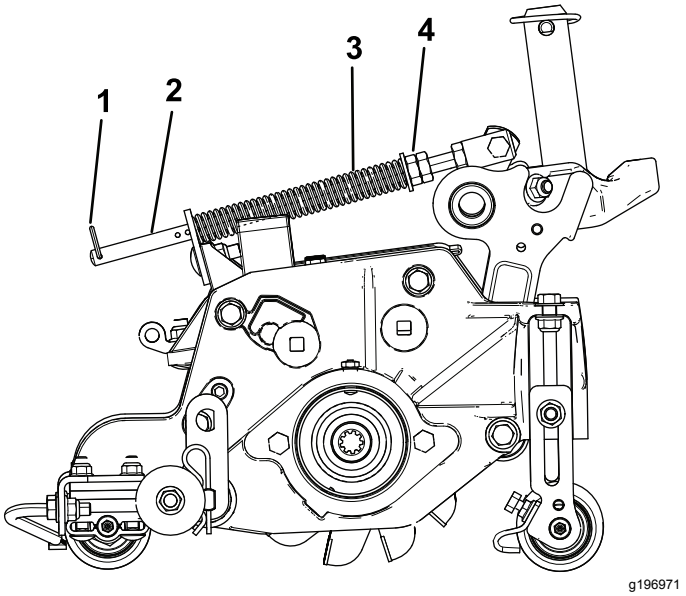

Figure 14

1. Hairpin cotter
2. Spring rod
3. Turf-compensation spring
4. Hex nuts

2. Tighten the hex nuts on the front end of the spring rod until the compressed length of the spring is 15.9 cm (6.25 inches) (Figure 14).

   Note: When operating the machine on rough terrain, decrease the spring length by 1.3 cm (1/2 inch).

   Note: Reset the turf compensation setting if the HOC setting or the aggressiveness-of-cut setting changes.

Operating Tips

1. Operate the traction unit at full throttle, full reel speed (setting 9) and at desired traction speed.
2. The maximum recommended setting is 6 mm (1/4 inch) deep blade penetration.
3. Power requirements to operate the verticutter reels will vary with turf and soil conditions. Travel speed may need to be reduced in some conditions.
4. When operating in turf conditions where much debris is encountered, or unusually heavy thatch, open the front and rear discharge shields to help allow the debris to discharge from the reel.

⚠ CAUTION

Thrown debris could cause personal injury.

Do not open the rear shield so that it is higher than level to the ground.

Maintenance

Using the Kickstand When Tipping the Cutting Unit

Note: Whenever the verticutter has to be tipped to expose the verticutter blades, use the kickstand (supplied with traction unit) (Figure 15).

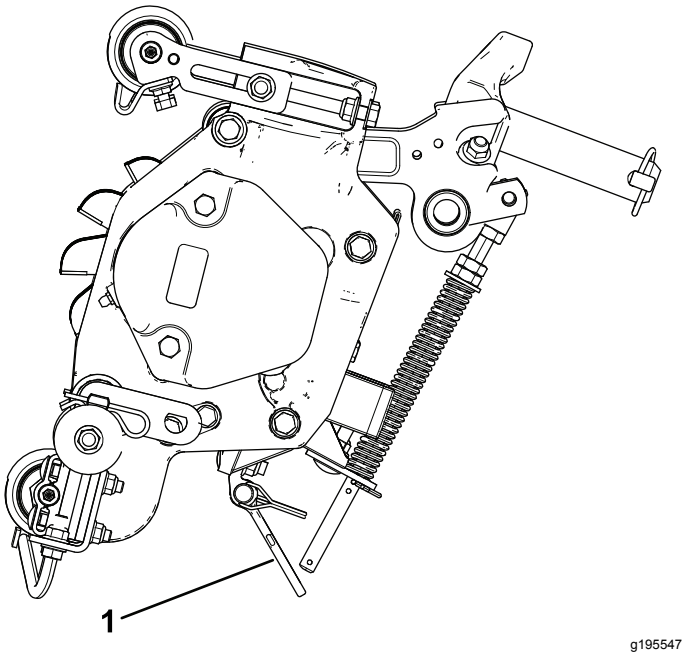

Figure 15

1. Kickstand

Lubricating the Verticutter

Each verticutter has 5 grease fittings (Figure 16) that must be lubricated weekly with No. 2 lithium grease.

The lubrication points are the front roller (2), the rear roller (2), and the reel motor splines (1).

Important: **Lubricating the cutting units immediately after washing helps purge water out of the bearings and increases bearing life.**

1. Wipe each grease fitting with a clean rag.
2. Apply grease until you see clean grease coming out of the roller seals and the bearing relief valve (Figure 16).

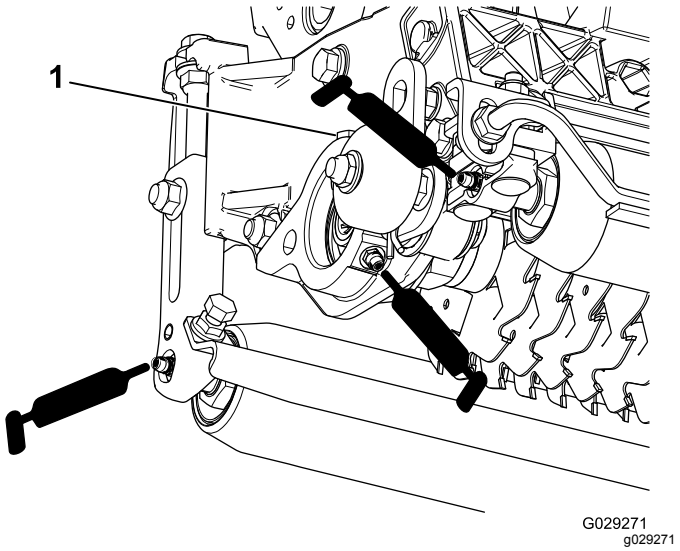

Figure 16

1. Relief valve

3. Wipe any excess grease away.

Removing the Verticutter Blades from the Shaft

1. Secure the end of the verticutter shaft, which has only one washer and nut, in a vise.
2. On other end of shaft, rotate the nut counter-clockwise and remove the nut.

⚠ CAUTION

The blades are extremely sharp and may have burrs that will cut your hands.

Use caution when removing the blades from the shaft.

3. Remove the small spacer, the washer, the blades and the large spacers. Clean and lubricate the square shaft with a light coating of grease to simplify the assembly (Figure 17).

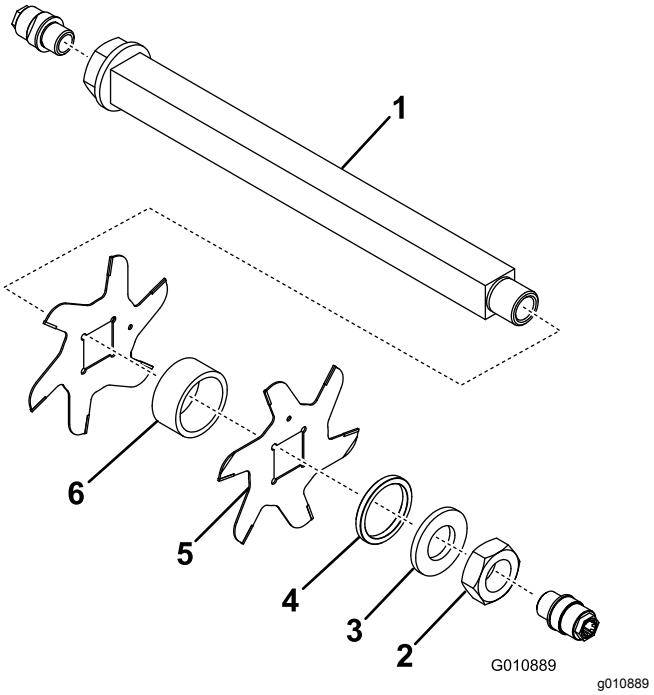

Figure 17

1. Shaft
2. Nut
3. Washer
4. Small spacer
5. Blade (19)
6. Large spacer (18)

Important: **Do not invert the verticutter reel blades. The order of disassembly is extremely important. Do not invert the verticutter reel blades when disassembling or reverse the order when assembling them. Note the verticutter blades index hole. The index hole is provided for assembly in order to obtain the proper helix for the verticutter reel.**

Installing the Verticutter Blades

1. Assemble a reel blade (Figure 18).
2. Assemble a large spacer.
3. Do not invert the reel blades when assembling them onto the reel shaft.

   Note: If the blades are inverted, the blades that are in use (rounded) will mix with the sharp ends of the previously unused blades; this will cause unsatisfactory verticutter performance.
4. Install the next blade clockwise so that the index reference hole (Figure 18) is not aligned with the first blade hole by one flat of the shaft.

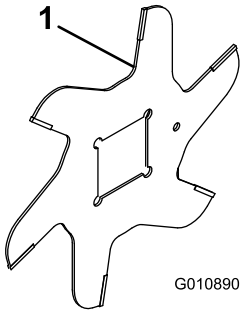

Figure 18

1. Index reference hole

5. Continue to install spacers and blades in this manner until the full complement of blades has been installed.

   Note: When properly assembled, the blades will be staggered in such a manner as to appear like a helix.
6. Install the small spacer to the shaft.
7. Apply Blue Loctite 242 to the nut. Install the nut onto the shaft (machined side of the nut toward the spacer) and tighten it to 109 to 135 N·m (80 to 100 ft-lb).

Servicing the Roller

The Roller Rebuild Kit (Part No. 114-5430) and the Roller Rebuild Tool Kit (Part No. 115-0803) (Figure 19) are available for servicing the roller. The Roller Rebuild Kit includes all the bearings, bearing nuts, inner seals, and outer seals to rebuild a roller. The Roller Rebuild Tool Kit includes all the tools and the installation instructions required to rebuild a roller with the roller rebuild kit. Refer to your parts catalog or contact your authorized Toro distributor for assistance.

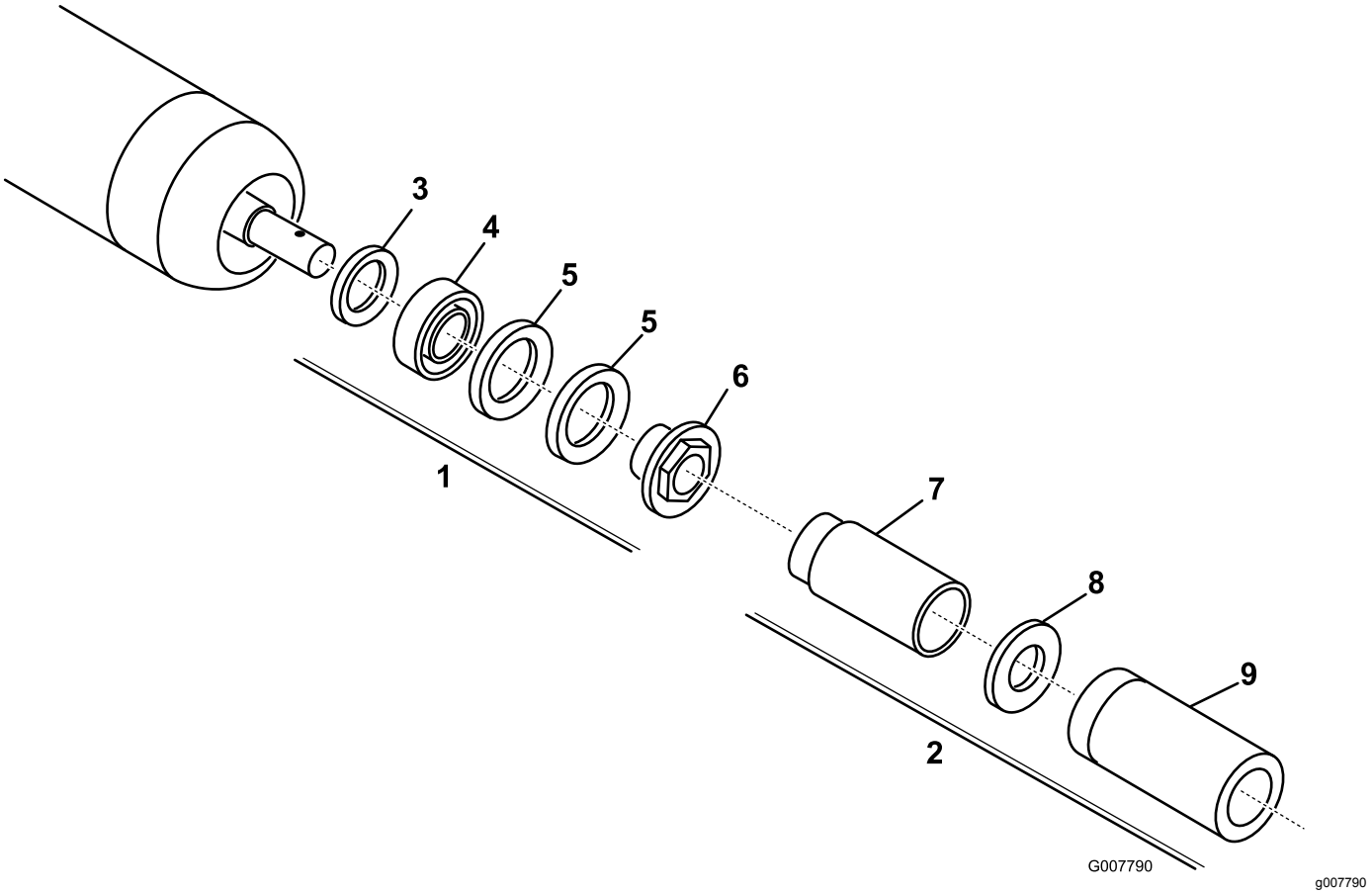

Figure 19

1. Roller Rebuild Kit (Part No. 114-5430)
2. Roller Rebuild Tool kit (Part No. 115-0803)
3. Inner seal
4. Bearing
5. Outer seal
6. Bearing nut
7. Inner seal tool
8. Washer
9. Bearing/outer-seal tool

Notes:

Notes:

Notes:

Declaration of Incorporation

The Toro Company, 8111 Lyndale Ave. South, Bloomington, MN, USA declares that the following unit(s) conform(s) to the directives listed, when installed in accordance with the accompanying instructions onto certain Toro models as indicated on the relevant Declarations of Conformity.

Model No.	Serial No.	Product Description	Invoice Description	General Description	Directive
03731	404000000 and Up	27-inch Verticutter, Reelmaster 7000-D Cutting Unit	RM7000 27IN VERTICUTTER CU	Verticutter	2006/42/EC

Relevant technical documentation has been compiled as required per Part B of Annex VII of 2006/42/EC.

We will undertake to transmit, in response to requests by national authorities, relevant information on this partly completed machinery. The method of transmission shall be electronic transmittal.

This machinery shall not be put into service until incorporated into approved Toro models as indicated on the associated Declaration of Conformity and in accordance with all instructions, whereby it can be declared in conformity with all relevant Directives.

Certified:



John Heckel
Sr. Engineering Manager
8111 Lyndale Ave. South
Bloomington, MN 55420, USA
January 15, 2020

Authorized Representative:

Marcel Dutrieux
Manager European Product Integrity
Toro Europe NV
Nijverheidsstraat 5
2260 Oevel
Belgium

EEA/UK Privacy Notice

Toro's Use of Your Personal Information

The Toro Company ("Toro") respects your privacy. When you purchase our products, we may collect certain personal information about you, either directly from you or through your local Toro company or dealer. Toro uses this information to fulfil contractual obligations - such as to register your warranty, process your warranty claim or to contact you in the event of a product recall - and for legitimate business purposes - such as to gauge customer satisfaction, improve our products or provide you with product information which may be of interest. Toro may share your information with our subsidiaries, affiliates, dealers or other business partners in connection these activities. We may also disclose personal information when required by law or in connection with the sale, purchase or merger of a business. We will never sell your personal information to any other company for marketing purposes.

Retention of your Personal Information

Toro will keep your personal information as long as it is relevant for the above purposes and in accordance with legal requirements. For more information about applicable retention periods please contact legal@toro.com.

Toro's Commitment to Security

Your personal information may be processed in the US or another country which may have less strict data protection laws than your country of residence. Whenever we transfer your information outside of your country of residence, we will take legally required steps to ensure that appropriate safeguards are in place to protect your information and to make sure it is treated securely.

Access and Correction

You may have the right to correct or review your personal data, or object to or restrict the processing of your data. To do so, please contact us by email at legal@toro.com. If you have concerns about the way in which Toro has handled your information, we encourage you to raise this directly with us. Please note that European residents have the right to complain to your Data Protection Authority.

The Toro Warranty

Two-Year or 1,500 Hours Limited Warranty

Conditions and Products Covered

The Toro Company and its affiliate, Toro Warranty Company, pursuant to an agreement between them, jointly warrant your Toro Commercial product ("Product") to be free from defects in materials or workmanship for 2 years or 1,500 operational hours*, whichever occurs first. This warranty is applicable to all products with the exception of Aerators (refer to separate warranty statements for these products). Where a warrantable condition exists, we will repair the Product at no cost to you including diagnostics, labor, parts, and transportation. This warranty begins on the date the Product is delivered to the original retail purchaser.
* Product equipped with an hour meter.

Instructions for Obtaining Warranty Service

You are responsible for notifying the Commercial Products Distributor or Authorized Commercial Products Dealer from whom you purchased the Product as soon as you believe a warrantable condition exists. If you need help locating a Commercial Products Distributor or Authorized Dealer, or if you have questions regarding your warranty rights or responsibilities, you may contact us at:

Toro Commercial Products Service Department
Toro Warranty Company
8111 Lyndale Avenue South
Bloomington, MN 55420-1196

952–888–8801 or 800–952–2740
E-mail: commercial.warranty@toro.com

Owner Responsibilities

As the product owner, you are responsible for required maintenance and adjustments stated in your *Operator's Manual*. Repairs for product issues caused by failure to perform required maintenance and adjustments are not covered under this warranty.

Items and Conditions Not Covered

Not all product failures or malfunctions that occur during the warranty period are defects in materials or workmanship. This warranty does not cover the following:

- Product failures which result from the use of non-Toro replacement parts, or from installation and use of add-on, or modified non-Toro branded accessories and products.
- Product failures which result from failure to perform recommended maintenance and/or adjustments.
- Product failures which result from operating the Product in an abusive, negligent, or reckless manner.
- Parts consumed through use that are not defective. Examples of parts which are consumed, or used up, during normal Product operation include, but are not limited to, brake pads and linings, clutch linings, blades, reels, rollers and bearings (sealed or greasable), bed knives, spark plugs, castor wheels and bearings, tires, filters, belts, and certain sprayer components such as diaphragms, nozzles, and check valves.
- Failures caused by outside influence, including, but not limited to, weather, storage practices, contamination, use of unapproved fuels, coolants, lubricants, additives, fertilizers, water, or chemicals.
- Failure or performance issues due to the use of fuels (e.g. gasoline, diesel, or biodiesel) that do not conform to their respective industry standards.
- Normal noise, vibration, wear and tear, and deterioration. Normal "wear and tear" includes, but is not limited to, damage to seats due to wear or abrasion, worn painted surfaces, scratched decals or windows.

Parts

Parts scheduled for replacement as required maintenance are warranted for the period of time up to the scheduled replacement time for that part. Parts replaced under this warranty are covered for the duration of the original product warranty and become the property of Toro. Toro will make the final decision whether to repair any existing part or assembly or replace it. Toro may use remanufactured parts for warranty repairs.

Deep Cycle and Lithium-Ion Battery Warranty

Deep cycle and Lithium-Ion batteries have a specified total number of kilowatt-hours they can deliver during their lifetime. Operating, recharging, and maintenance techniques can extend or reduce total battery life. As the batteries in this product are consumed, the amount of useful work between charging intervals will slowly decrease until the battery is completely worn out. Replacement of worn out batteries, due to normal consumption, is the responsibility of the product owner. Note: (Lithium-Ion battery only): Pro-rated after 2 years. Refer to the battery warranty for additional information.

Lifetime Crankshaft Warranty (ProStripe 02657 Model Only)

The Prostripe which is fitted with a genuine Toro Friction Disc and Crank-Safe Blade Brake Clutch (integrated Blade Brake Clutch (BBC) + Friction Disc assembly) as original equipment and used by the original purchaser in accordance with recommended operating and maintenance procedures, are covered by a Lifetime Warranty against engine crankshaft bending. Machines fitted with friction washers, Blade Brake Clutch (BBC) units and other such devices are not covered by the Lifetime Crankshaft Warranty.

Maintenance is at Owner's Expense

Engine tune-up, lubrication, cleaning and polishing, replacement of filters, coolant, and completing recommended maintenance are some of the normal services Toro products require that are at the owner's expense.

General Conditions

Repair by an Authorized Toro Distributor or Dealer is your sole remedy under this warranty.

Neither The Toro Company nor Toro Warranty Company is liable for indirect, incidental or consequential damages in connection with the use of the Toro Products covered by this warranty, including any cost or expense of providing substitute equipment or service during reasonable periods of malfunction or non-use pending completion of repairs under this warranty. Except for the Emissions warranty referenced below, if applicable, there is no other express warranty. All implied warranties of merchantability and fitness for use are limited to the duration of this express warranty.

Some states do not allow exclusions of incidental or consequential damages, or limitations on how long an implied warranty lasts, so the above exclusions and limitations may not apply to you. This warranty gives you specific legal rights, and you may also have other rights which vary from state to state.

Note Regarding Emissions Warranty

The Emissions Control System on your Product may be covered by a separate warranty meeting requirements established by the U.S. Environmental Protection Agency (EPA) and/or the California Air Resources Board (CARB). The hour limitations set forth above do not apply to the Emissions Control System Warranty. Refer to the Engine Emission Control Warranty Statement supplied with your product or contained in the engine manufacturer's documentation.

Countries Other than the United States or Canada

Customers who have purchased Toro products exported from the United States or Canada should contact their Toro Distributor (Dealer) to obtain guarantee policies for your country, province, or state. If for any reason you are dissatisfied with your Distributor's service or have difficulty obtaining guarantee information, contact your Authorized Toro Service Center.