Form No. 3437-895 Rev A

Slope Sensor Kit

Model No. 02945

Model No. 02946

Model No. 02947

Model No. 02949

Model No. 02950

Installation Instructions

Refer to the following table for the appropriate kit, traction unit, and traction-unit serial number combination:

Kit Model Number	Traction Unit Model Number	Serial Number
02945	02750 (T4240)	405398421 and above
	30654 (CT2240)	405623665 and above
	31654 (CT2240)	All serial numbers
	30657 (LT3340—cab equipped)	405006390 and above
02946	30657 (LT3340)	405006390 and above
	30659 (LT-F3000)	404879018 and above
02947	30659 (LT-F3000—cab equipped)	404879018 and above
02949	02750 (T4240—cab equipped)	405398421 and above
02950	31050TE (PLH800)	320000155 and above

Safety

Safety and Instructional Decals

Safety decals and instructions are easily visible to the operator and are located near any area of potential danger. Replace any decal that is damaged or missing.

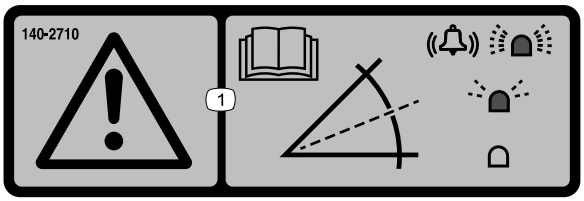

decal140-2710

140-2710

1. 1. Warning—read the *Operator's Manual*; a fast flashing light and alarm sounding indicates a steep slope; a slow flashing light indicates a moderate slope; no light indicates normal operating conditions.

© 2020—The Toro® Company
8111 Lyndale Avenue South
Bloomington, MN 55420

Register at www.Toro.com.

CE

Original Instructions (EN)
Printed in the USA
All Rights Reserved

3437-895 A

Installation

1

Preparing the Machine

No Parts Required

Procedure

1. Park the machine on a level surface.
2. Engage the parking brake.
3. Lower the cutting unit(s).
4. Shut off the machine and remove the key.

2

Installing the Kit

Parts needed for this procedure:

1	Slope sensor
1	Slope-sensor mount (LTF/LT/CT only)
1	Slope-sensor mount (T4240 only)
2	Bolt (M6 x 35 mm)
2	Bolt (M6 x 25 mm—LTF/LT/CT only)
4	Flange nut (M6)
2	Bolt (M10—T4240 only)
2	Flange nut (M10—T4240 only)
1	LED indicator
1	Alarm
1	Wire harness
6	Cable tie
1	Slope sensor decal

Installing the Kit

T4240 Machines

1. Release the operator platform; refer to your machine *Operator's Manual*.
2. Use 2 bolts (M6 x 35 mm) and 2 flange nuts (M6) to secure the slope sensor to the slope-sensor mount.

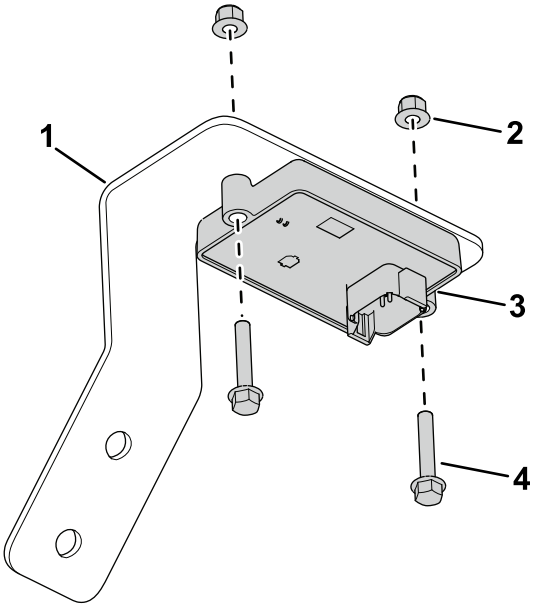

g304899

Figure 1

1. Slope sensor mount
2. Flange nut (M6)
3. Slope sensor
4. Bolt (M6 x 35 mm)

3. Use 2 bolts (M6 x 25 mm) and 2 flange nuts (M6) to secure the slope sensor mount to the chassis (Figure 3).

   Note: Figure 2 shows the location of the chassis with the operator's platform in the secured position. The chassis mounting position is under the operator's platform.

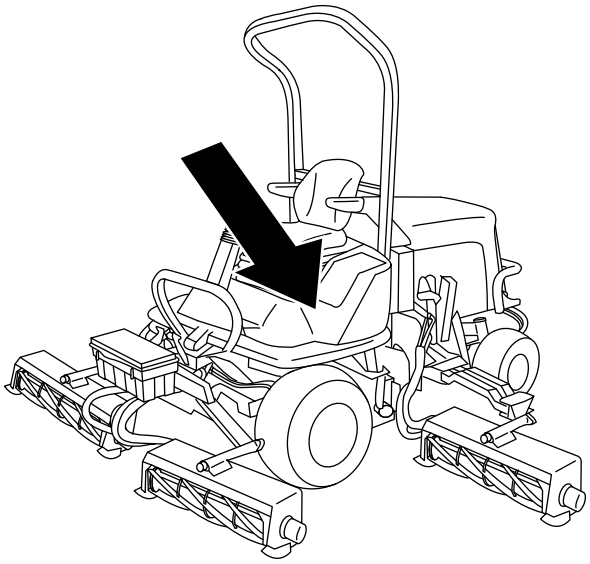

g307378

Figure 2

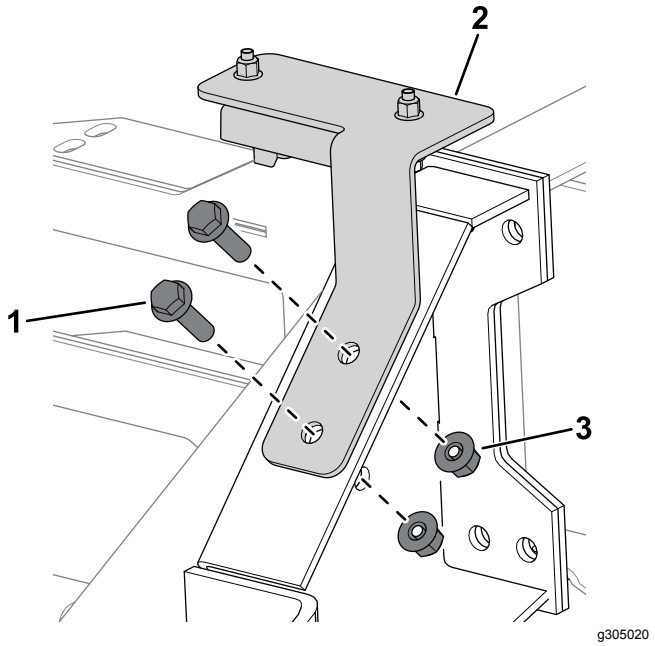

Figure 3

1. Bolt (M10)
2. Slope sensor mount
3. Flange nut (M10)

4. Install the wire harness connector labeled P02 to the slope sensor (Figure 4).

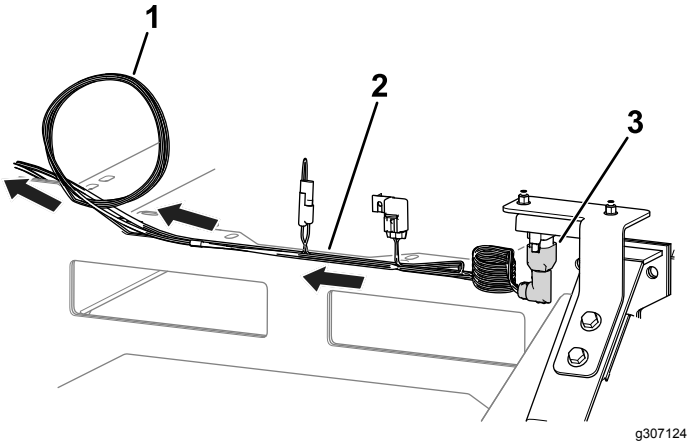

Figure 4

1. Coil the wire harness in this location.
2. Wire harness
3. Wire harness connector (P02)

5. Route the wire harness towards the control panel (Figure 4) and ensure that it is secured and away from moving parts or pinch points.
6. Coil any additional amount of wire harness to the left of the control panel (Figure 4).
7. Remove the plug and install the LED light in the control panel as shown in Figure 5.

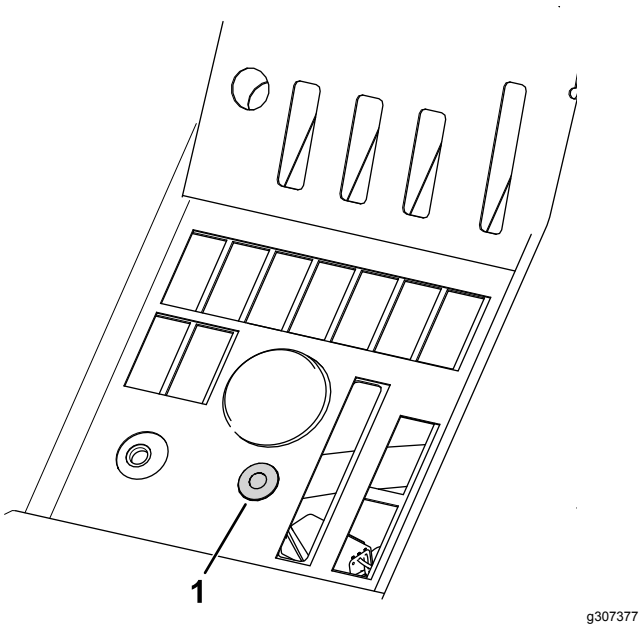

Figure 5

1. LED light

8. Connect the remaining wire-harness connectors as follows:
   - Wire harness connector labeled P01: Connect to one of the 6-pin sealed connectors located on the main harness below the control panel.
   - Wire harness connector labeled P08: Connect to the LED light.
   - Wire harness connector labeled P09: Connect to the alarm and position the alarm under the control panel.

     Note: Ensure that the alarm does not obstruct any controls.
9. Secure the operator's platform; refer to your machine *Operator's Manual*.
10. Install the slope-sensor decal adjacent to the machine-stability decal on the operator's platform (Figure 6).

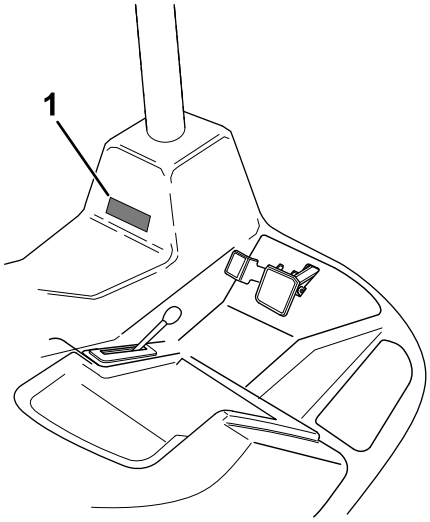

g308240

Figure 6

1. Slope-sensor decal

Installing the Kit

CT2240, LT3340, and LTF Machines

1. Remove the 6 screws securing the control panel to the control pod (Figure 7).

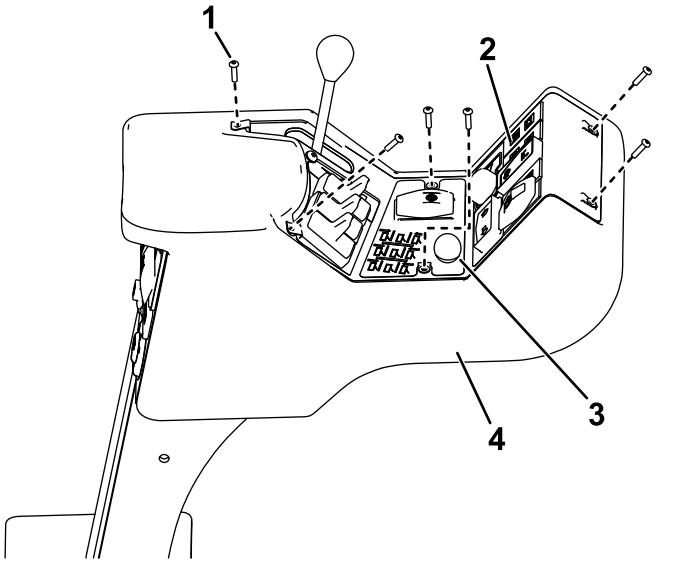

g304897

Figure 7

1. Screw
2. Control panel
3. Plug
4. Control pod

2. Carefully lift off the panel, ensuring that the connectors to the existing switches are not disturbed.
3. Remove the plug (Figure 7) from the console.
4. Insert the LED light into the console.
5. Install the wire harness as shown in Figure 8.
6. Connect the LED light to the wire-harness connector labeled P08 (Figure 8).

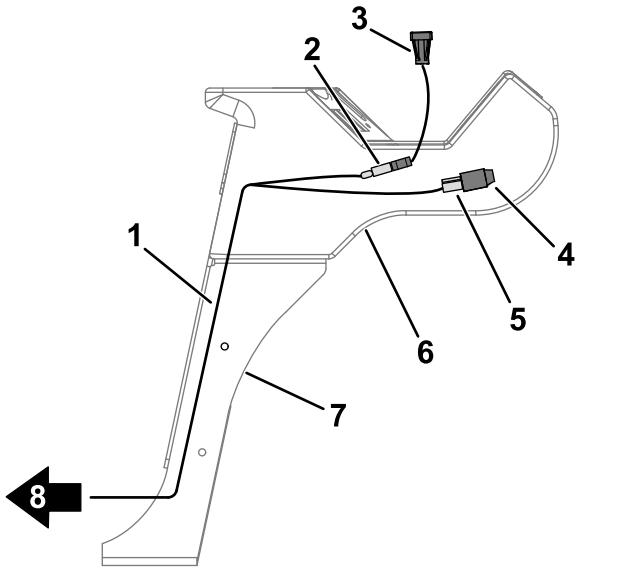

g304404

Figure 8

1. Wire harness
2. Connector—P08
3. LED light
4. Alarm
5. Connector—P09
6. Control pod
7. Control arm
8. Route the wire harness toward the roll bar.

7. Connect the alarm to the wire-harness connector labeled P09 (Figure 8).
8. Route the remaining end of the wire harness down the control arm (Figure 8).
9. Use the previously-removed screws to secure the control panel to the control pod.
10. Raise the hood.
11. Route the wire harness along the machine chassis and up to the electrical panel.
12. Use 2 bolts (M6 x 35 mm) and 2 flange nuts (M6) to secure the slope sensor to the slope-sensor mount (Figure 9).

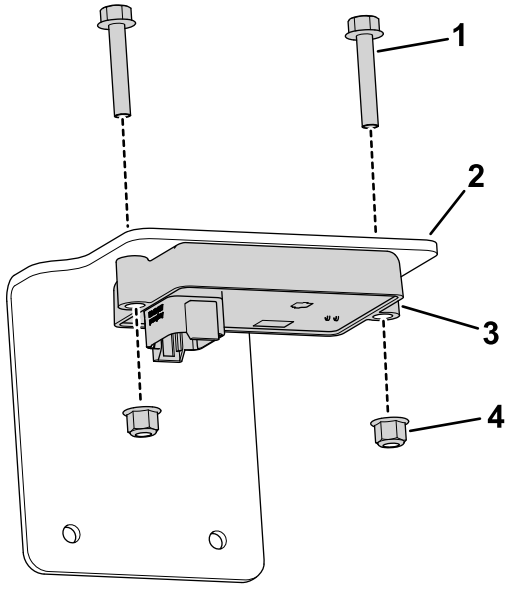

Figure 9

1. Bolt (M6 x 35 mm)
2. Slope sensor mount
3. Slope sensor
4. Flange nut (M6)

13. Connect the wire-harness connector labeled P02 to the slope sensor.
14. Use 2 bolts (M6 x 25 mm) and 2 flange nuts (M6) to secure the slope sensor mount to the electrical panel (Figure 10).

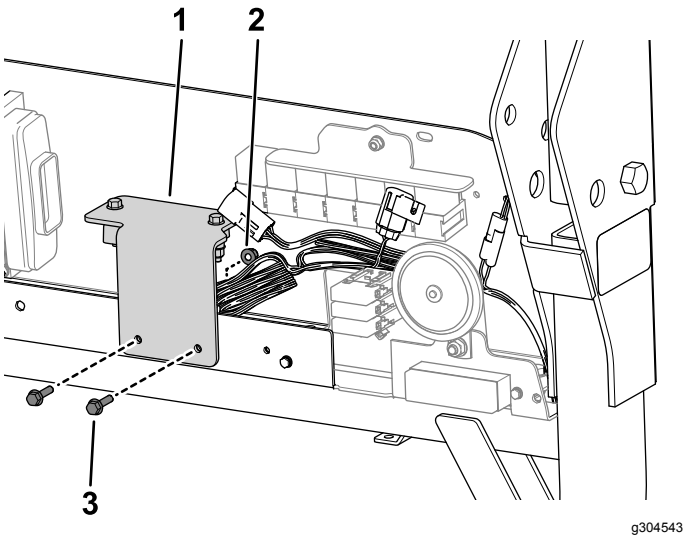

Figure 10

1. Slope sensor mount
2. Flange nut (M6)
3. Bolt (M6 x 25 mm)

15. Connect the kit-wire-harness connector labeled P01 to one of the 6-pin sealed connectors located below the relays on the electrical panel.
16. Use cable ties to secure the wire harness away from moving parts or pinch points.
17. Install the slope-sensor decal adjacent to the machine-stability decal on the storage-pod lid (Figure 11).

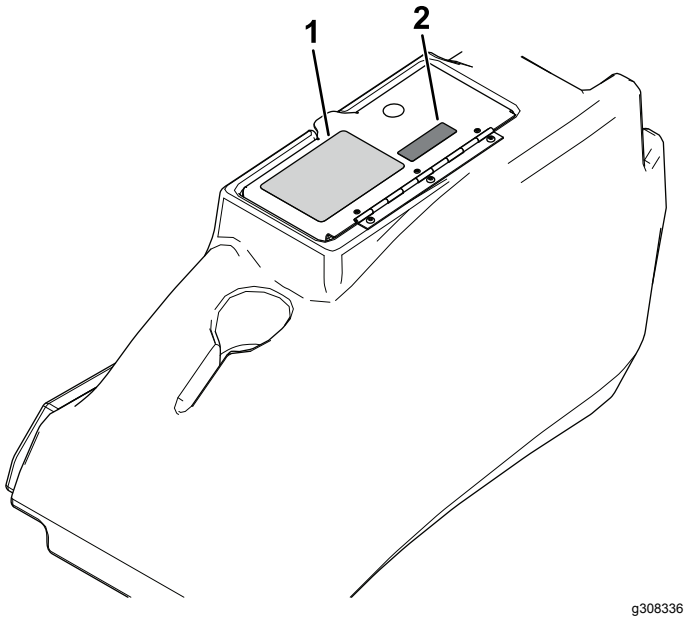

Figure 11

1. Machine-stability decal
2. Slope-sensor decal

Installing the Kit

PLH800 Machines

1. Remove the battery cover; refer to the electrical system maintenance section of your *Operator's Manual*.
2. Use 2 bolts (M6 x 35 mm) and 2 flange nuts (M6) to secure the slope sensor on the mounting plate in front of the battery (Figure 12).

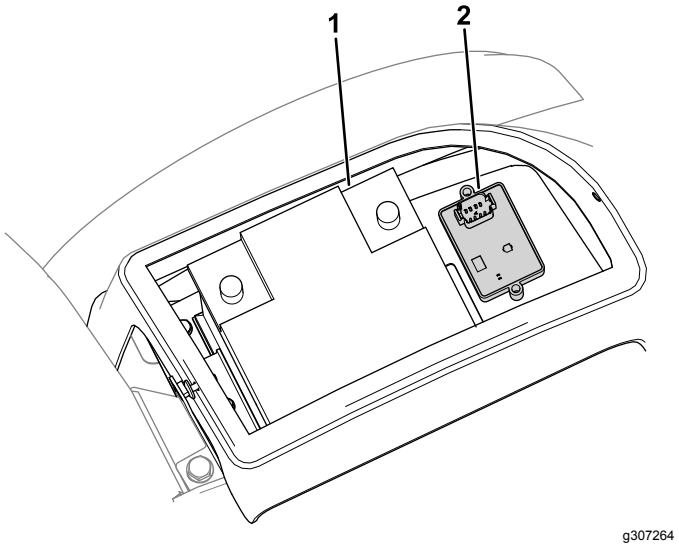

Figure 12

1. Battery
2. Slope sensor

3. Remove the steering wheel, dashboard, and front panel (Figure 13).

   Note: Carefully lift off the dashboard, ensuring that the connectors to the existing switches are not disturbed.

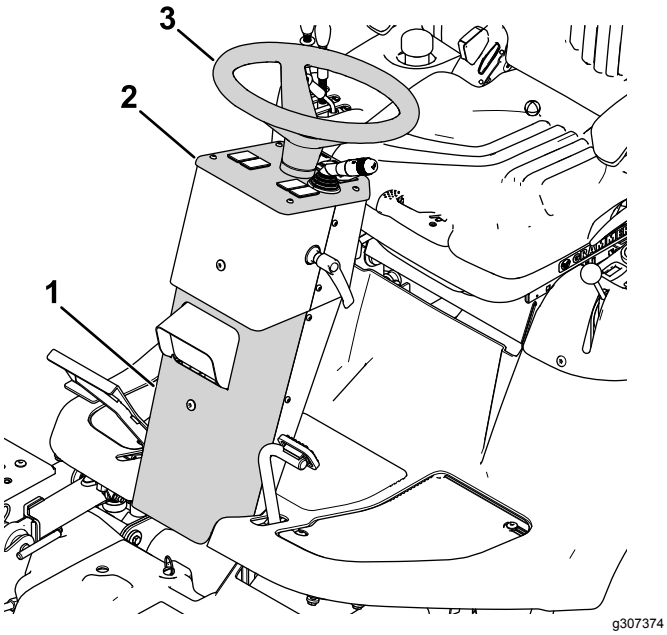

Figure 13

1. Front panel
2. Dashboard
3. Steering wheel

4. Remove the plug and install the LED light and the slope-sensor decal to the dashboard (Figure 14).

   If a hole for the LED light is not present, drill a 19-mm hole in the location shown in Figure 15..

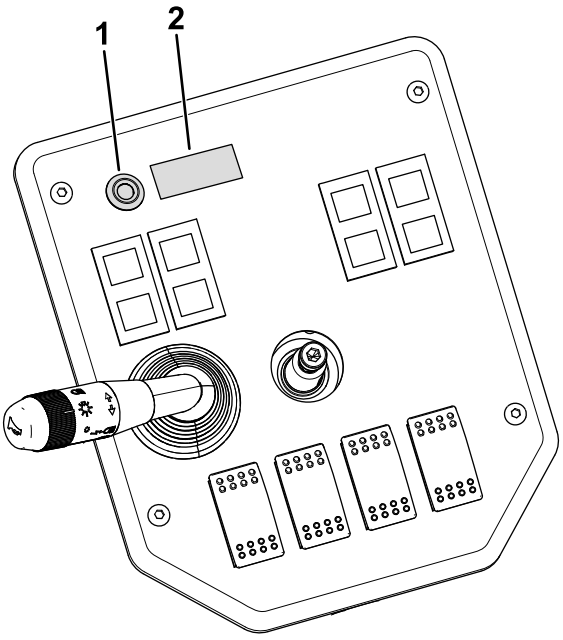

Figure 14

1. LED light
2. Slope sensor decal

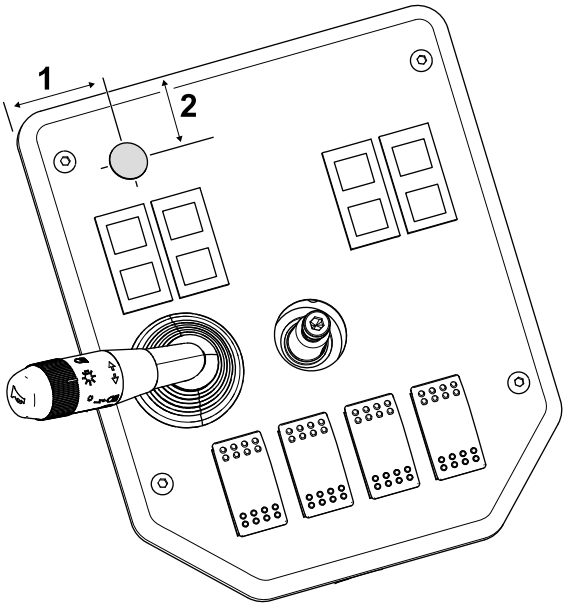

Figure 15

1. 40 mm
2. 25 mm

5. Remove the plug and install the alarm on the steering-column rear panel (Figure 16).

   If a hole for the alarm is not present, drill a 30-mm hole in the location shown in Figure 17.

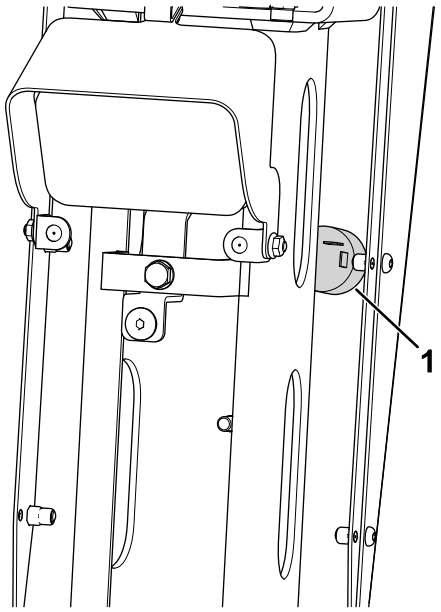

Figure 16

1. Alarm

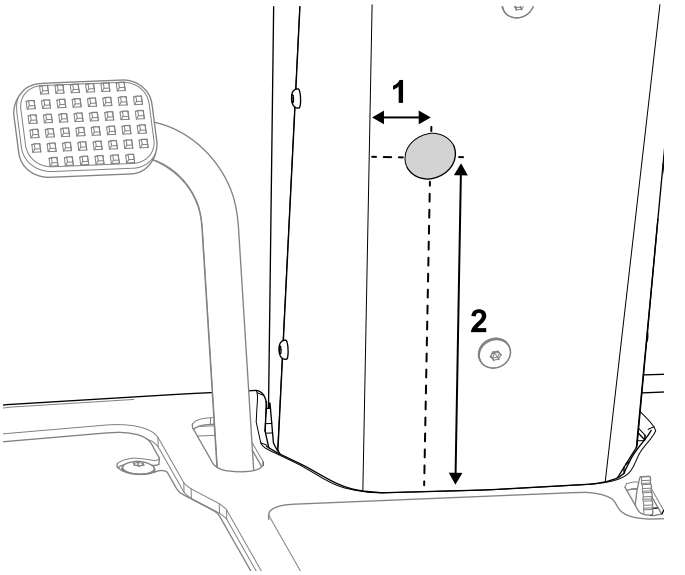

Figure 17

1. 30 mm
2. 210 mm

6. Connect the wire harness as follows:
   - Wire harness connector labeled P01: Connect to one of the 6-pin sealed connectors located on the main harness next to the grass chute on the right side of the machine.
   - Wire harness connector labeled P02: Connect to the slope sensor.
7. Route the wire harness under the platform with the machine wire harness and into the steering column (Figure 18).

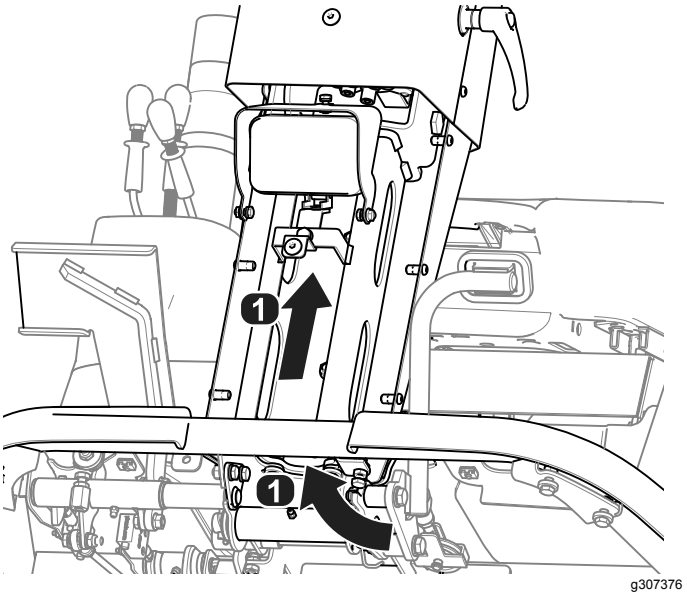

Figure 18

1. Wire-harness-routing direction

8. Connect the remaining wire-harness connectors as follows:
   - Wire harness connector labeled P08: Connect to the LED light.
   - Wire harness connector labeled P09: Connect to the alarm.
9. Use a cable tie to coil together any additional amount of wire harness in front of the battery (Figure 19).

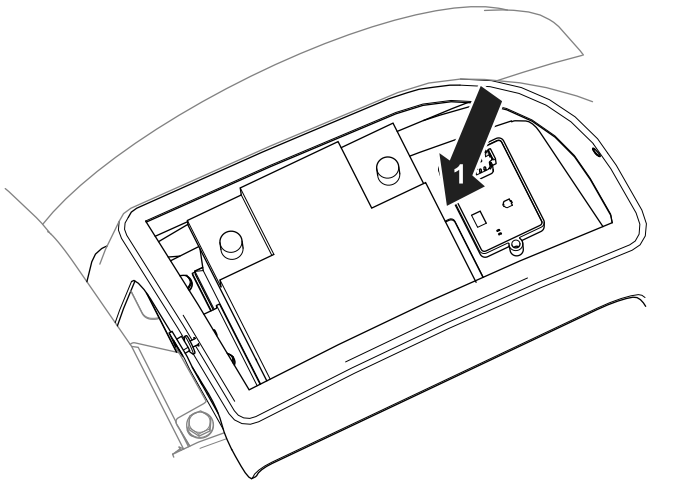

Figure 19

1. Coil the wire harness here.

10. Use cable ties to secure the wire harness away from moving parts and pinch points.
11. Install the battery cover and the dashboard, steering wheel, and front cover.

3

Calibrating the Sensor

No Parts Required

Procedure

1. While the machine is on a flat surface, remove the plug from calibration connectors (labeled P05 and P06).
2. Plug the connectors together.
3. Turn the ignition key to the ON position, but do not start the engine.

   Note: The LED light blinks as the sensor calibrates.
4. When the light no longer blinks, turn the ignition key to the OFF position.
5. Disconnect the calibration connectors and install the plug onto the connectors.

Operation

Using the Slope Sensor

When you start the machine, the LED light illuminates for 5 seconds to indicate that the sensor is functioning properly.

The light and alarm indicates the severity of the slope:

- No light—normal operating conditions
- Slow, flashing light—moderate slope
- Fast, flashing light and audible alarm—steep slope; proceed to a more shallow slope.

⚠ WARNING

Slopes are a major factor related to loss-of-control and tip-over accidents, which can result in severe injury or death.

Use extreme caution when operating the machine on a slope.