Form No. 3437-948 Rev A

TORO®

Count on it.

Parts Catalog

TRX-300

Trencher

Model No. 22984—Serial No. 405600000 and Up

Register at www.Toro.com.
Original Instructions (EN)

CE

3437-948 A

Ordering Replacement Parts

To order replacement parts, please supply the part number, the quantity, and the description of each part desired.

Understanding Reference Numbers

Each identified part in an illustration has a reference number. The reference number for a part also appears in the parts list, along with other information about the part.

This catalog uses two special reference number formats, one to indicate parts in a service assembly and another to indicate the quantity of a given part in an illustration.

Service Assembly Reference Numbers

Parts in service assemblies have reference numbers in the form a:b. The a represents the reference number of the entire service assembly and the b represents a sequential number unique to each part within the service assembly.

For example, a wheel assembly might be identified by reference number 6, the tire by 6:1, the valve by 6:2, and the wheel by 6:3. When you order the assembly identified by reference number 6, you receive all parts identified by reference numbers 6:1,6:2, and 6:3. However, you may also order any part individually. Reference numbers of this type appear in illustration and in parts lists.

Reference Numbers Indicating Quantity

In an illustration, if a reference number indicates more than one part, the reference number has the form nX y. The n represents the quantity of the part, the X is the multiplication symbol, and the y represents the reference number.

For example, in an illustration, the reference number 2X 37 means that two of the parts identified by reference number 37 are indicated.

Contents

Frame Assembly 4
Control Tower and Fuel Tank Assembly 6
Track Assembly 8
Brake Linkage Assembly 10
Engine and Muffler Assembly 12
Hydraulic Assembly 14
Valve Assembly No. 137-7646 16
Valve Inlet Section Assembly No. 139-1337 18
Valve Inlet Section Assembly No. 139-1338 20
Series Valve Section Assembly No. 139-1339 22
Parallel Valve Section Assembly No. 139-1344 24
Series Valve Section Assembly No. 139-1345 26
Parallel Valve Section Assembly No. 139-1346 28
Outlet Section Assembly No. 139-1347 30
Oil Cooler Assembly 32
Trencher Head and Lift Assembly 34
Hydraulic Cylinder Assembly No. 137-3827 36
Handle Control Assembly 38
Electrical Assembly 40
Wire Harness Assembly No. 137-7624 42
Attachments and Accessories 44

© 2020—The Toro® Company
8111 Lyndale Avenue South
Bloomington, MN 55420

Contact us at www.Toro.com.
Printed in the USA.
All Rights Reserved

Frame Assembly

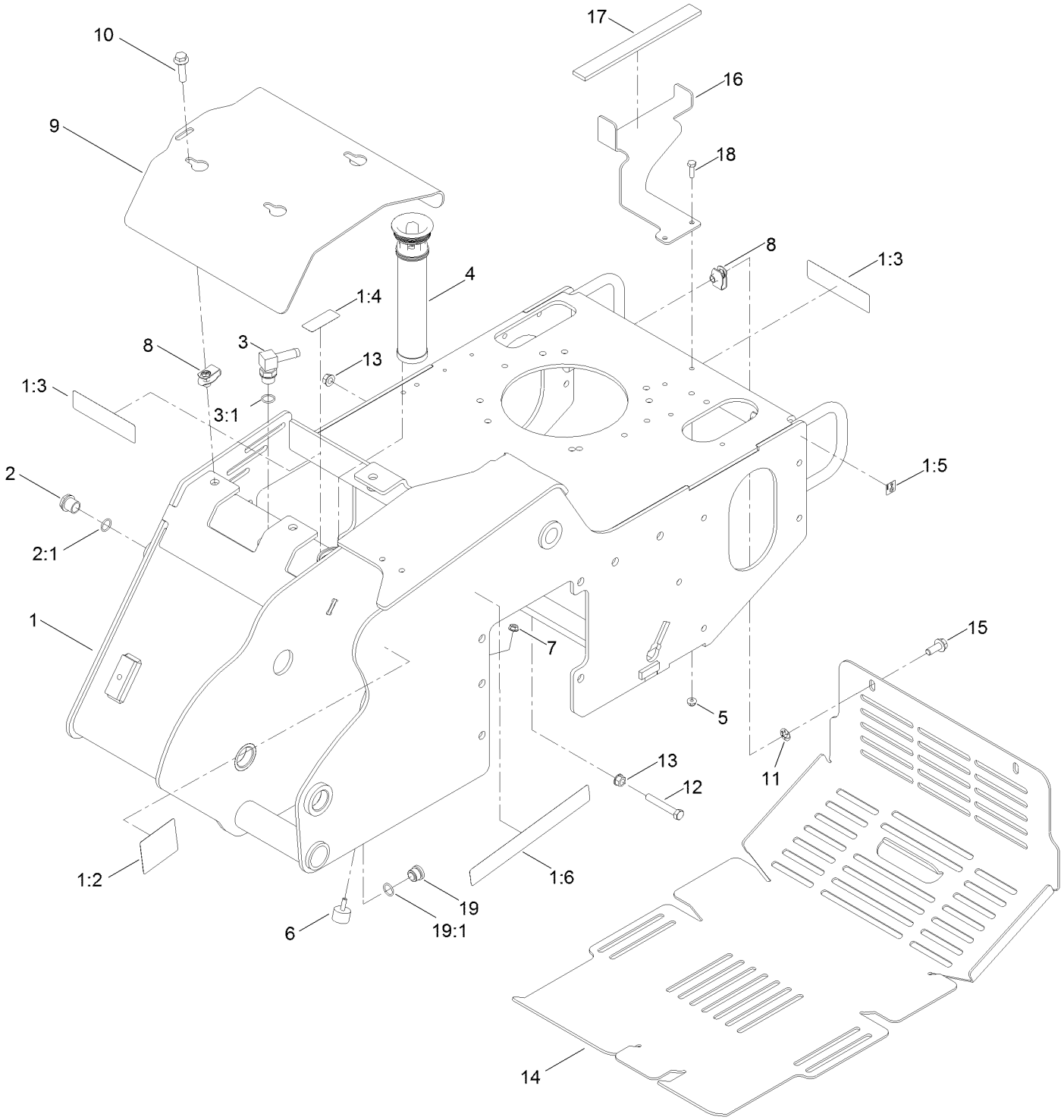

Frame Assembly (continued)

Ref.	Part Number	Qty.	Description
1	137-7628	1	Main Frame ASM
1:2	100-4650	1	Decal-Warning
1:3	93-7814	2	Decal-Danger
1:4	93-6686	1	Decal-Oil, HYD
1:5	93-9084	2	Decal-Point, Lift
1:6	138-7103	1	Decal-Intellitrench
2	114-3075	1	Sight Glass ASM
2:1	237-79	1	O-Ring
3	354-120	1	Fitting-Elbow, 90
3:1	237-79	1	O-Ring
4	114-3039	1	Filter-Tank, In
5	104-7201	2	Nut-HF
6	1-523420	1	Bumper
7	32128-33	1	Nut-HF
8	140-1146	5	Nut-Clip, U
9	137-7623-03	1	Plate-Cover, Front
10	33105-040	5	Screw-HHF
11	140-1144	5	Nut-Push
12	323-12	1	Screw-HH
13	32128-40	2	Nut-Flange
14	119-5106-01	1	Cover-Rear
15	108-1531	2	Screw-HHF
16	119-5091-01	1	Bracket-Tank
17	117-6417	1	Pad-Foam
18	321-5	2	Screw-HH
19	133-7659	1	Plug ASM
19:1	237-79	1	O-Ring

Control Tower and Fuel Tank Assembly

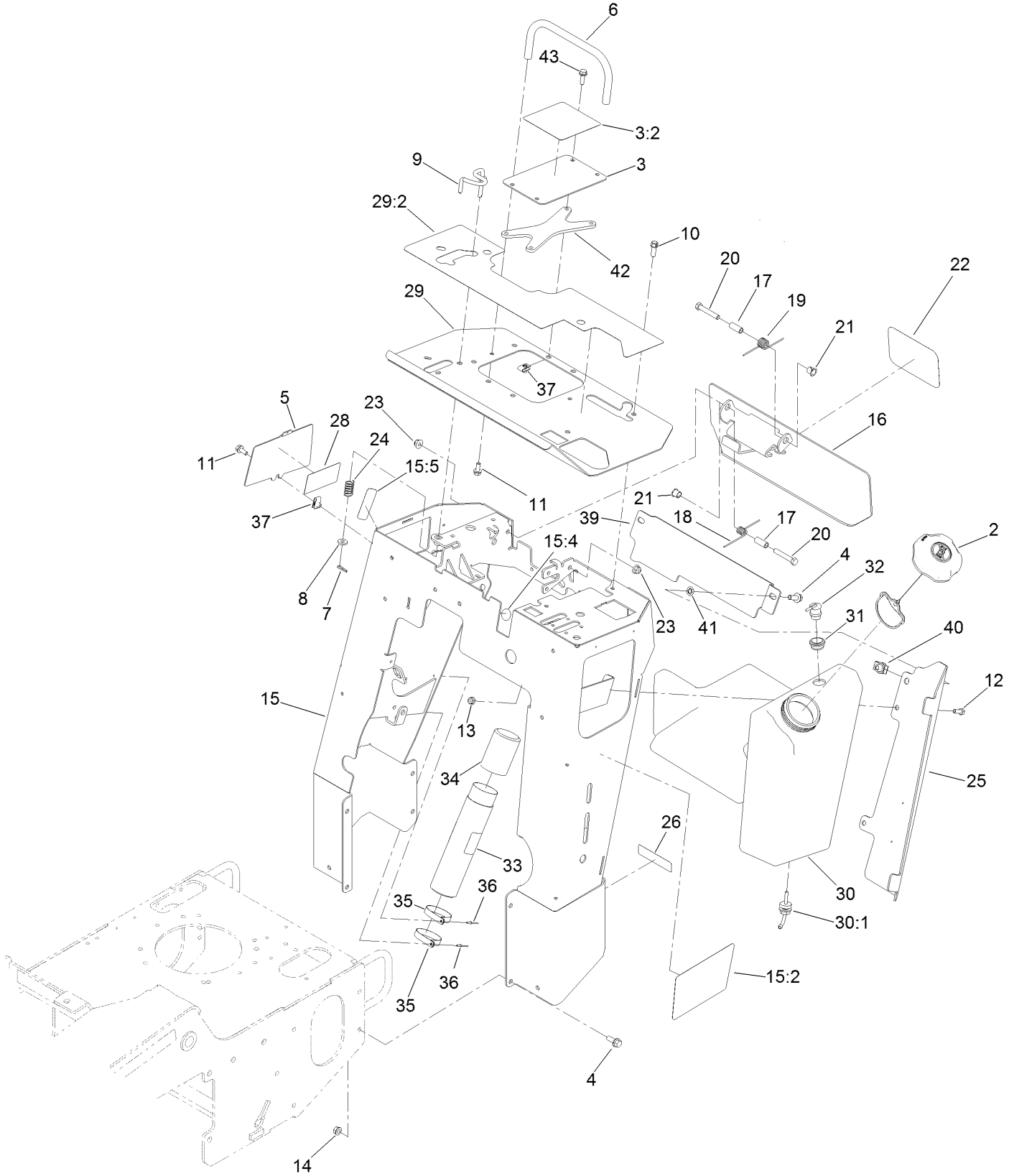

Control Tower and Fuel Tank Assembly (continued)

Ref.	Part Number	Qty.	Description
2	137-4119	1	Cap-Fuel, Ratcheting
3	137-3795	1	Cover-Handle, Traction
3:2	138-7107	1	Decal-Traction
4	3234-11	10	Screw-HHF
5	137-7654-01	1	Plate-Cover, Access
6	137-7641	1	Bar-Reference
7	3290-307	1	Pin-Cotter
8	88-7200	1	Washer-Flat
9	114-8727	1	Rod-Interlock
10	95-1726	4	Screw-Taptite
11	3234-5	3	Screw-HHF
12	322-4	2	Screw-HH
13	104-8300	2	Nut-HF, NI
14	32128-40	8	Nut-Flange
15	137-3794	1	Control Tower ASM
15:2	137-3839	1	Decal-Side, LH
15:4	107-8495	1	Decal-Brake, Parking
15:5	139-1271	1	Decal-Brake, Parking
16	137-7652-03	1	Plate-Reverse
17	114-1337	2	Spacer-Spring
18	98-8425	1	Spring-Torsion, LH
19	137-7695	1	Spring-Torsion
20	323-11	2	Screw-HH
21	256-257	2	Bushing-Nyliner
22	105-1217	1	Decal
23	104-8301	2	Nut-HF, NI
24	85-6750	1	Spring-Control
25	119-5086-01	1	Bracket-Cover, Tank
26	133-8062	1	Decal-Arrestor, Spark
28	138-7154	1	Decal-Fuse
29	137-3799	1	Cover-Control
29:2	138-7106	1	Decal-Panel, Control
30	120-7359	1	Tank-Fuel
30:1	103-2605	1	Fitting-Fuel, Bulkhead
31	114-0284	1	Grommet
32	119-3547	1	Valve-Vent, Fuel
33	104-7050	1	Tube-Manual
34	104-7048	1	Cap-Housing
35	2412-120	2	Clamp-R
36	3269-17	2	Rivet-Pop
37	94-2413	5	Nut-U
39	139-1259-03	1	Guard-Tower
40	105-4886	2	Nut-Tinnerman
41	107-3154	2	Nut-Push
42	139-1288-03	1	Spacer-Cover
43	3234-17	4	Screw-HHF

Track Assembly

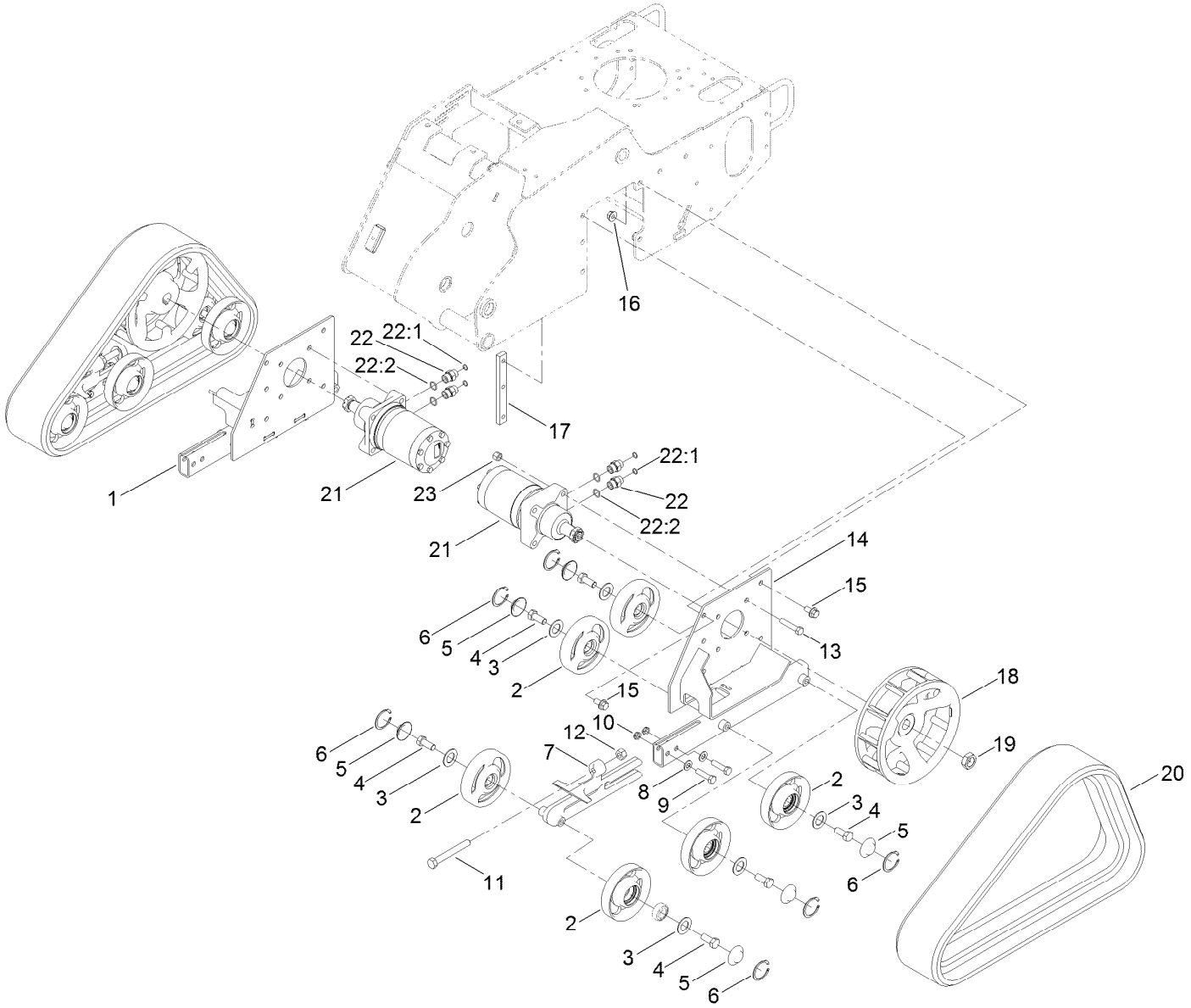

Track Assembly (continued)

Ref.	Part Number	Qty.	Description
1	114-2993-03	1	Frame-Track, RH
2	138-3139	12	Tensioner Wheel ASM
3	106-7585	12	Gasket-Bogie
4	327-4	12	Screw-HH
5	106-7557	12	Cap-Wheel, Bearing
6	106-7595	12	Ring-Snap, Internal
7	114-3077-03	2	Tensioner-Track
8	3256-26	4	Washer-Flat
9	325-8	4	Screw-HH
10	3296-45	4	Nut-Hex
11	112-4874	2	Screw-HH, TAP
12	3217-11	2	Nut-Hex
13	325-10	8	Screw-HH
14	114-2992-03	1	Frame-Track, LH
15	3234-6	10	Screw-HHF
16	32128-49	4	Nut-HHF
17	114-3091	2	Bar-Thread
18	117-6426-03	2	Wheel-Drive
19	106-8159	2	Nut-Lock
20	112-4816	2	Track-Rubber
21	137-3866	2	Wheel Motor ASM
22	340-6	4	Fitting-Straight
22:1	237-30	1	O-Ring
22:2	237-80	1	O-Ring
23	3296-23	8	Nut-Lock, NI

Brake Linkage Assembly

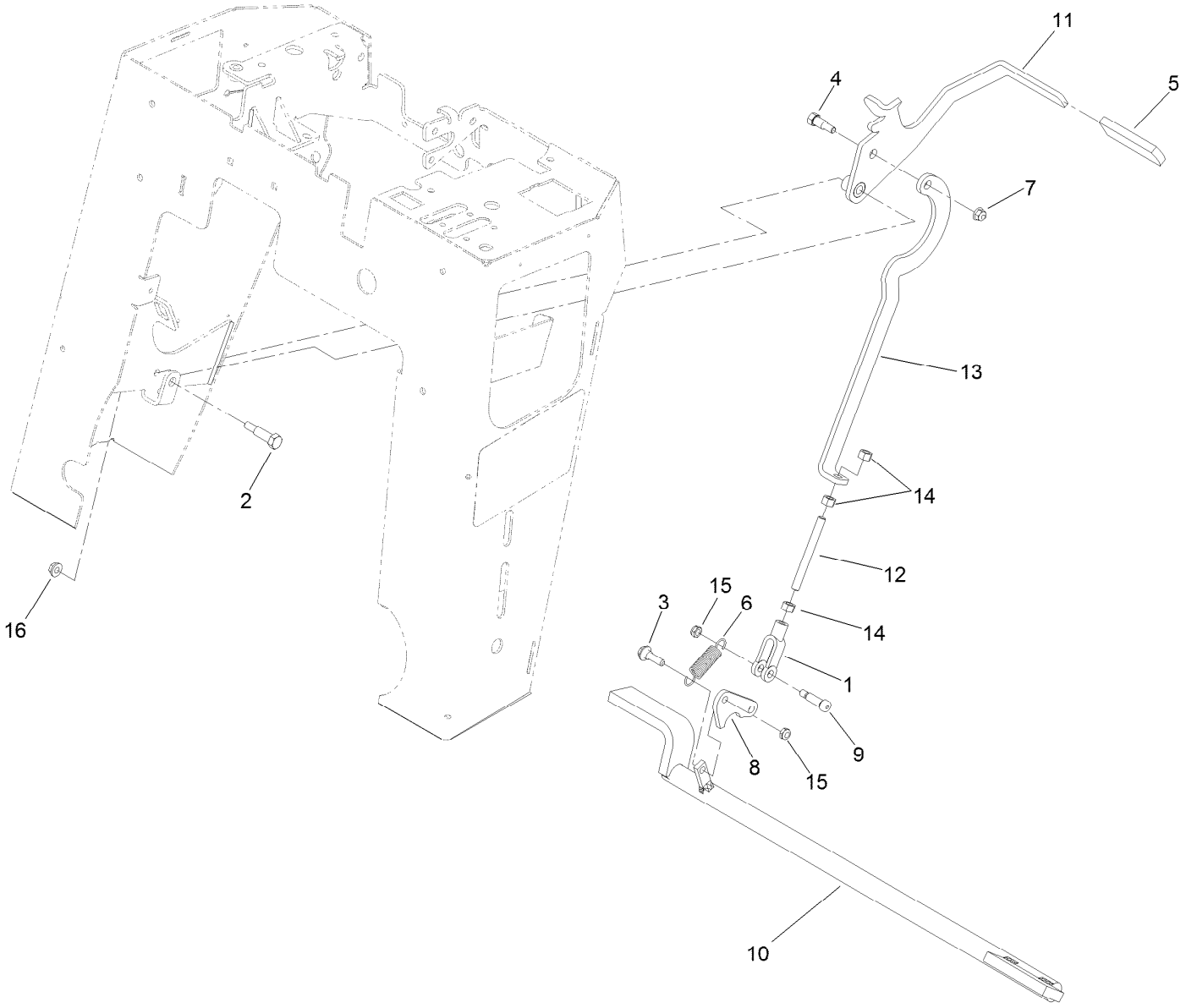

Brake Linkage Assembly (continued)

Ref.	Part Number	Qty.	Description
1	1-633131	1	Yoke-Linkage, Brake
2	7-0030	1	Screw-Shoulder, HH
3	27-7211	1	Screw-Shoulder
4	28-0540	1	Bolt-Shoulder
5	62-9130	1	Grip-Handle
6	67-1450	1	Spring-Idler
7	104-8300	1	Nut-HF, NI
8	114-2975	1	Link-Mounting
9	114-8629	1	Bolt-Shoulder
10	121-6240-03	1	Bar-Brake
11	121-6242-03	1	Handle-Brake
12	121-6243	1	Rod-Threaded
13	121-6245-03	1	Plate-Brake
14	3219-3	3	Nut-Hex
15	3296-47	2	Nut-Lock, NI
16	32128-20	1	Nut-HF

Engine and Muffler Assembly

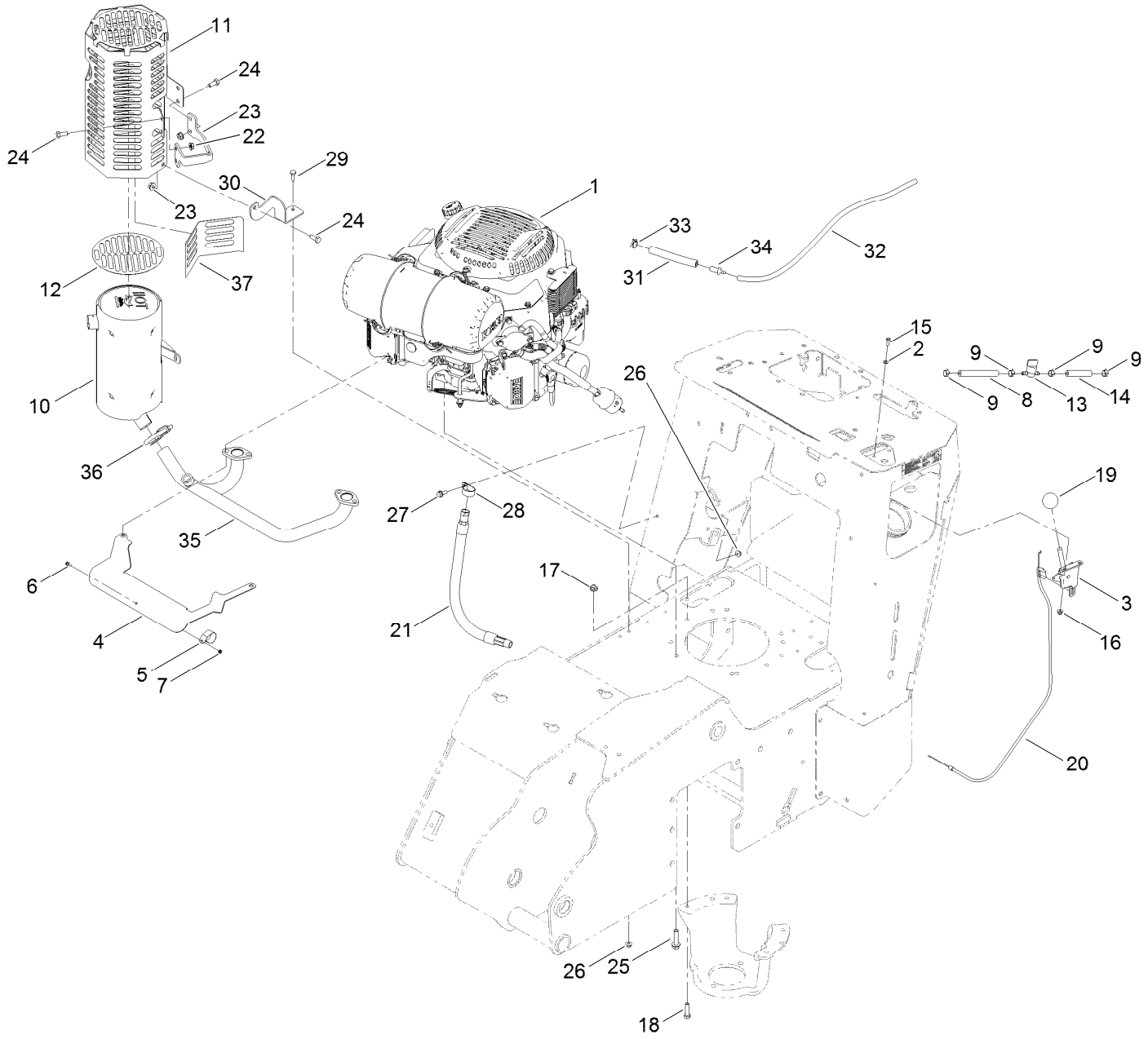

Engine and Muffler Assembly (continued)

Ref.	Part Number	Qty.	Description
1	138-3130	1	Engine-Kohler, Ps-Ecv749-3068 ▲
2	3256-21	2	Washer-Flat
3	110-5547	1	Lever-Control
4	137-7691	1	Shield-Heat
5	115-6488	1	Clamp
6	115-6494	1	Screw-Pan
7	115-6495	1	Nut-Hex
8	109-0295	1	Hose-Fuel
9	2412-98	4	Clamp-Hose
10	138-7138	1	Muffler-Kohler
11	139-1310-03	1	Guard-Muffler
12	131-0604	1	Guard-Foil
13	1-603770	1	Valve-Fuel
14	109-0304	1	Hose-Fuel
15	3290-134	2	Screw
16	120-4578	2	Nut-HF
17	32128-20	3	Nut-HF
18	322-6	3	Screw-HH
19	233-42	1	Knob

Ref.	Part Number	Qty.	Description
20	115-1211	1	Cable-Control
21	116-5316	1	Oil Drain Hose ASM
21:2	353-508	1	Plug-HH ■ ●
21:2:1	237-42	1	O-Ring ●
22	138-3101-03	1	Bracket-Muffler
23	32128-26	5	Nut-Flange
24	322-3	5	Screw-HH
25	32144-102	4	Screw-HWH
26	104-7201	3	Nut-HF
27	3234-4	1	Screw-HHF
28	2412-106	1	Clamp-R
29	321-4	2	Screw-HH
30	139-1335-03	1	Bracket-Guard, Muffler
31	138-3150	1	Hose-Vent
32	138-3151	1	Hose-Vent
33	103-1988	1	Clamp-Hose
34	116-4630	1	Fitting-Orifice, Straight
35	138-7139	1	Manifold-Kohler
36	2112-11	1	Clamp-Muffler
37	139-1322	1	Guard-Foil

● Not illustrated
▲ Obtain parts from www.kohlerplus.com

■ Torque to 24-26 ft-lb

Hydraulic Assembly

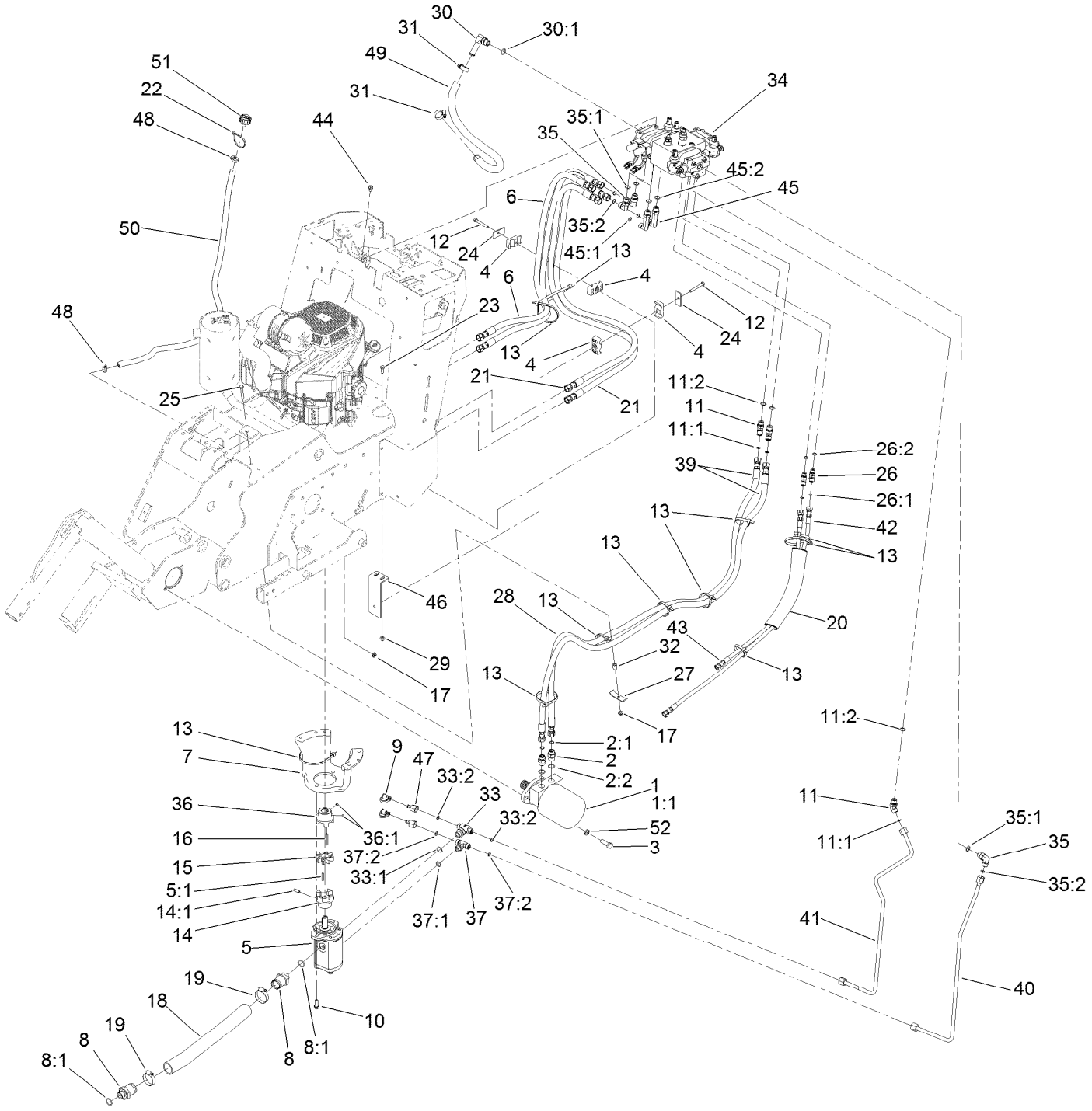

Hydraulic Assembly (continued)

Ref.	Part Number	Qty.	Description
1	117-6306	1	Hydraulic Motor ASM
1:1	115-4061	1	Seal Kit
2	340-6	2	Fitting-Straight
2:1	237-30	1	O-Ring
2:2	237-80	1	O-Ring
3	325-6	2	Screw-HH
4	94-8105	6	Clamp-Tube
5	137-7630	1	Pump-HYD
5:1	27-8590	1	Key-Square
6	137-7682	2	Hydraulic Hose ASM
7	137-7634-03	1	Mount-Pump
8	138-7126	2	Fitting-STR
8:1	237-81	1	O-Ring
9	354-79	2	Cap-Dust
10	324-4	2	Screw-HH
11	340-101	3	Fitting-HYD, 45 DEG
11:1	237-30	1	O-Ring
11:2	237-79	1	O-Ring
12	322-11	3	Screw-HH
13	3334-945	11	Tie-Cable
14	114-2933	1	Coupler-Flex
14:1	100-7594	1	Screw-Set
15	93-8827	1	Coupler-Spider
16	608006	1	Key-Square
17	32128-20	4	Nut-HF
18	138-7128	1	Hose-Suction, HYD
19	2412-130	2	Clamp-Hose
20	115-4064	1	Sleeve-Protective
21	137-7680	2	Hydraulic Hose ASM
22	3290-379	1	Tie-Cable
23	322-4	2	Screw-HH
24	69-9761	3	Plate-Cover
25	322-10	1	Screw-HH
26	340-87	2	Fitting-Elbow, 45 DEG
26:1	237-22	1	O-Ring
26:2	237-42	1	O-Ring
27	100-4860	1	Bracket-Clamp
28	99-5648	2	Sleeve-Protective
29	104-8300	2	Nut-HF, NI
30	87-8170	1	Fitting-90
30:1	237-80	1	O-Ring
31	2412-129	2	Clamp-Hose
32	93-5023	1	Spacer
33	130-8775	1	Fitting-HYD
33:1	237-80	1	O-Ring
33:2	237-30	2	O-Ring
34	137-7646	1	Valve ASM
35	340-98	3	Fitting-Elbow, 90 DEG
35:1	237-79	1	O-Ring
35:2	237-30	1	O-Ring
36	138-7100	1	Hub-Flex (1.125" Shaft)
36:1	100-7594	2	Screw-Set
37	340-157	1	Fitting-HYD, Tee
37:1	237-79	1	O-Ring
37:2	237-30	2	O-Ring
39	137-3730	2	Hydraulic Hose ASM
40	137-7698	1	HYD Tube ASM
41	137-3724	1	HYD Tube ASM
42	137-3731	1	Hydraulic Hose ASM
43	137-3732	1	Hose-HYD
44	68-9410	3	Screw-HHF
45	99-6160	2	Fitting-Elbow, 90 Long
45:1	237-30	1	O-Ring
45:2	237-79	1	O-Ring
46	137-3736-03	1	Bracket-Support, Hose
47	100-5616	2	Fitting
48	2412-36	2	Clamp-Hose
49	137-3733	1	Hose-Cooler
50	114-3042	1	Hose-Breather
51	68-6150	1	Breather
52	3253-7	2	Washer-Lock

Valve Assembly No. 137-7646

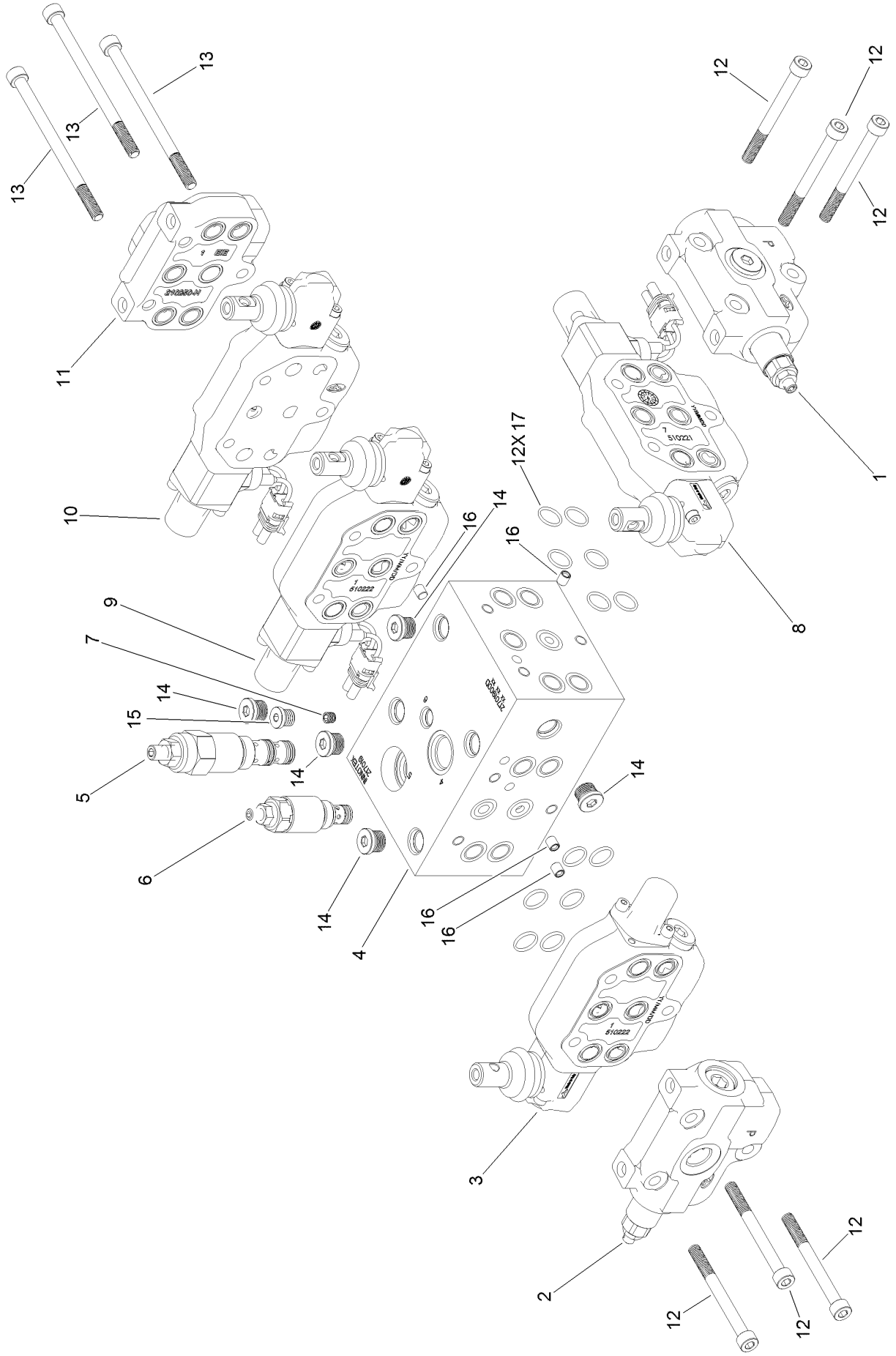

Valve Assembly No. 137-7646 (continued)

Ref.	Part Number	Qty.	Description
1	139-1337	1	Section-Inlet
2	139-1338	1	Section-Inlet
3	139-1339	1	Section-Valve, Series
4	139-1340	1	Block-Manifold
5	139-1341	1	Valve-Directional, Unloading
6	139-1342	1	Valve-Relief
7	139-1343	1	Plug-Orifice
8	139-1344	1	Section-Valve, Parallel
9	139-1345	1	Section-Valve, Series
10	139-1346	1	Section-Valve, Parallel
11	139-1347	1	Section-Outlet
12	139-1348	6	Screw-HSH
13	139-1349	3	Screw-HSH
14	131-3807	5	Plug
15	131-3806	1	Plug
16	140-1100	4	Plug-Expansion
17	140-1101	12	O-Ring

Valve Inlet Section Assembly No. 139-1337

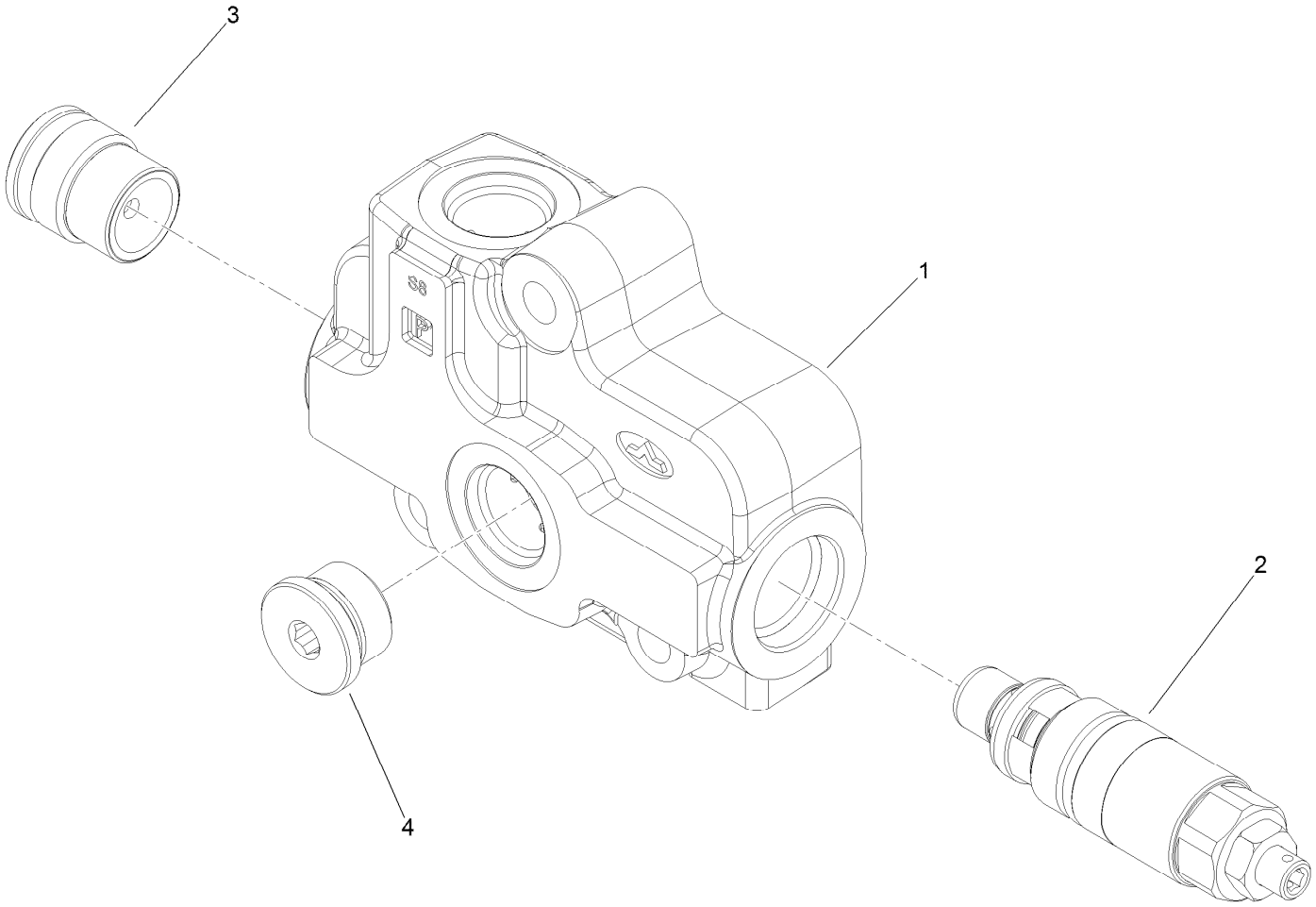

Valve Inlet Section Assembly No. 139-1337 (continued)

Ref.	Part Number	Qty.	Description
1	140-1102	1	Inlet
2	132-6039	1	Valve-Relief
3	140-1103	1	Plug
4	140-1104	1	Plug

Valve Inlet Section Assembly No. 139-1338

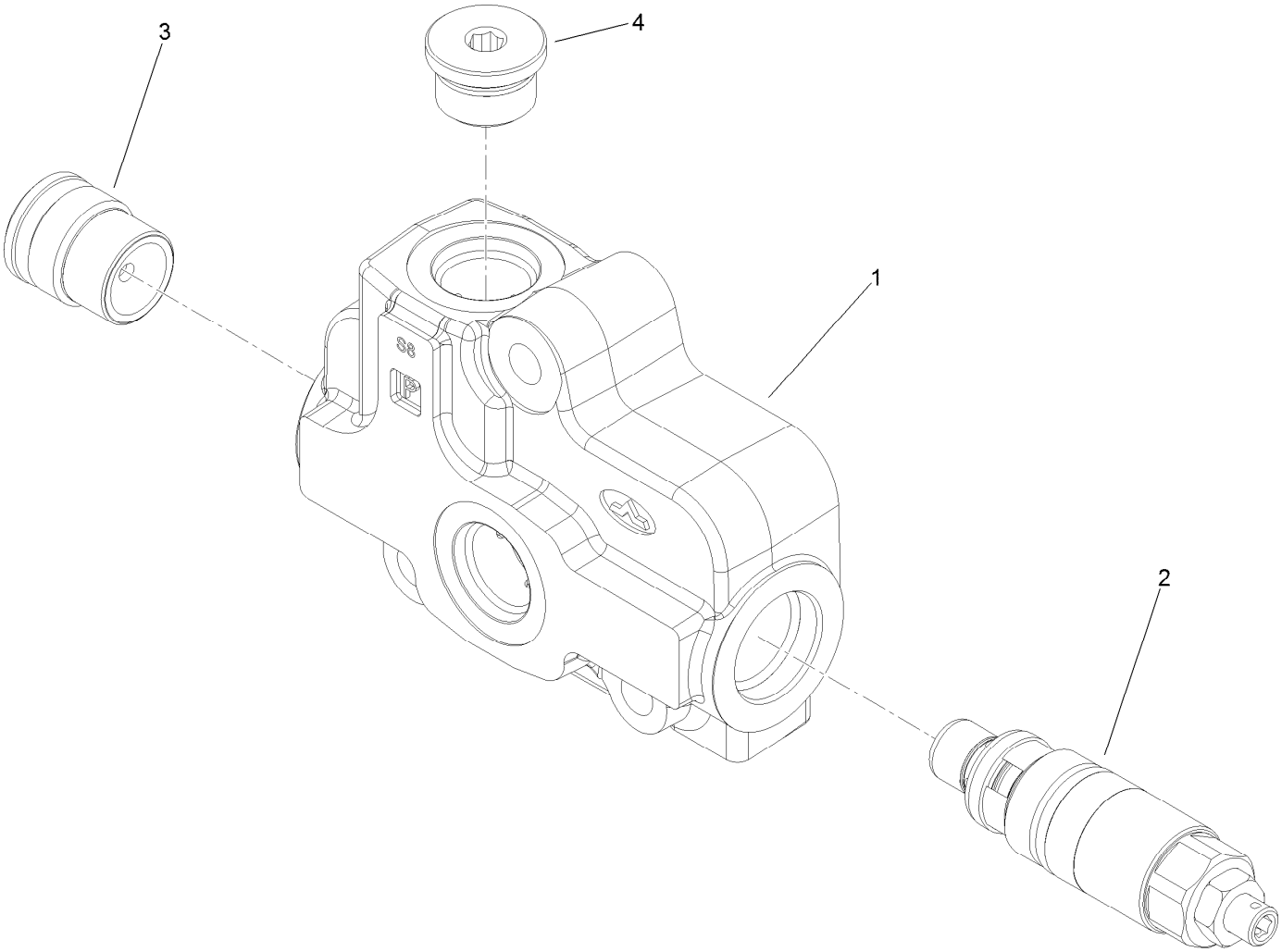

Valve Inlet Section Assembly No. 139-1338 (continued)

Ref.	Part Number	Qty.	Description
1	140-1102	1	Inlet
2	132-6039	1	Valve-Relief
3	140-1103	1	Plug
4	140-1104	1	Plug

Series Valve Section Assembly No. 139-1339

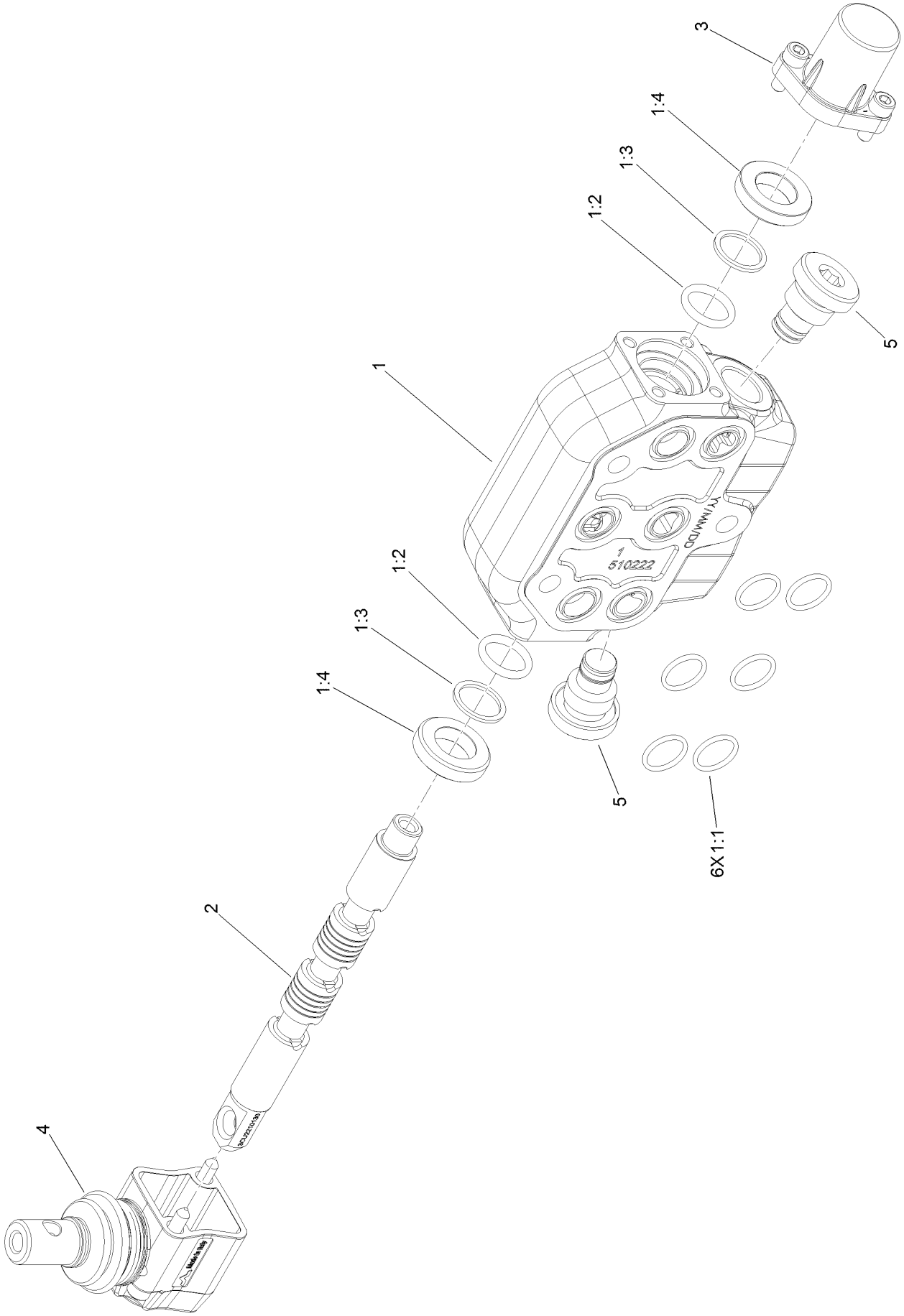

Series Valve Section Assembly No. 139-1339 (continued)

Ref.	Part Number	Qty.	Description
1	140-1109	1	Section-Working
1:1	140-1114	6	O-Ring
1:2	106-7719	2	Seal-Valve
1:3	140-1116	2	Seal-Valve
1:4	140-1117	2	Seal-Valve
2	140-1105	1	Valve-Spool
3	140-1110	1	Kit-Control
4	140-1107	1	Lever-Valve
5	140-1108	2	Plug

Parallel Valve Section Assembly No. 139-1344

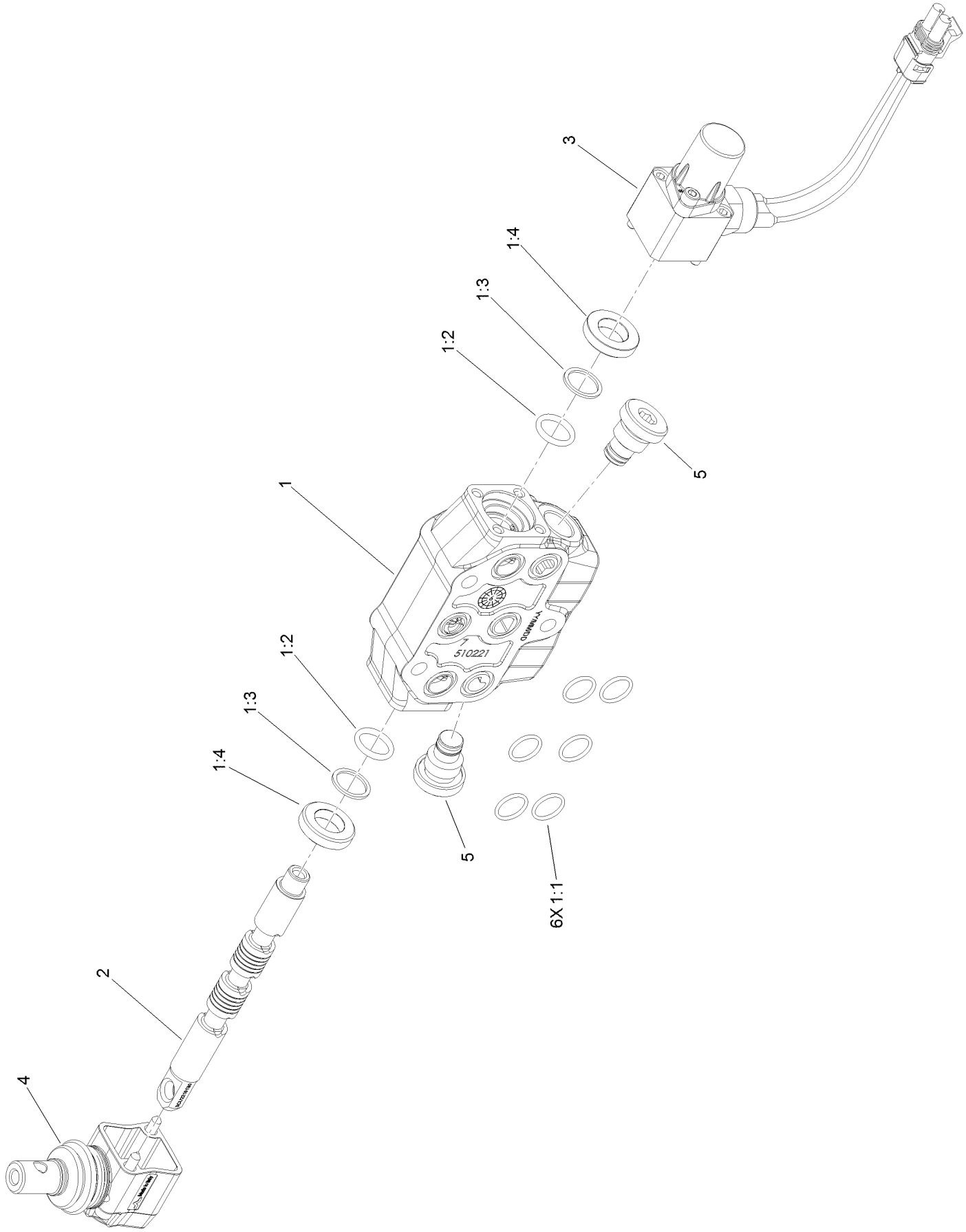

Parallel Valve Section Assembly No. 139-1344 (continued)

Ref.	Part Number	Qty.	Description
1	140-1115	1	Section-Working
1:1	140-1114	6	O-Ring
1:2	106-7719	2	Seal-Valve
1:3	140-1116	2	Seal-Valve
1:4	140-1117	2	Seal-Valve
2	140-1105	1	Valve-Spool
3	140-1106	1	Kit-Control
4	140-1107	1	Lever-Valve
5	140-1108	2	Plug

Series Valve Section Assembly No. 139-1345

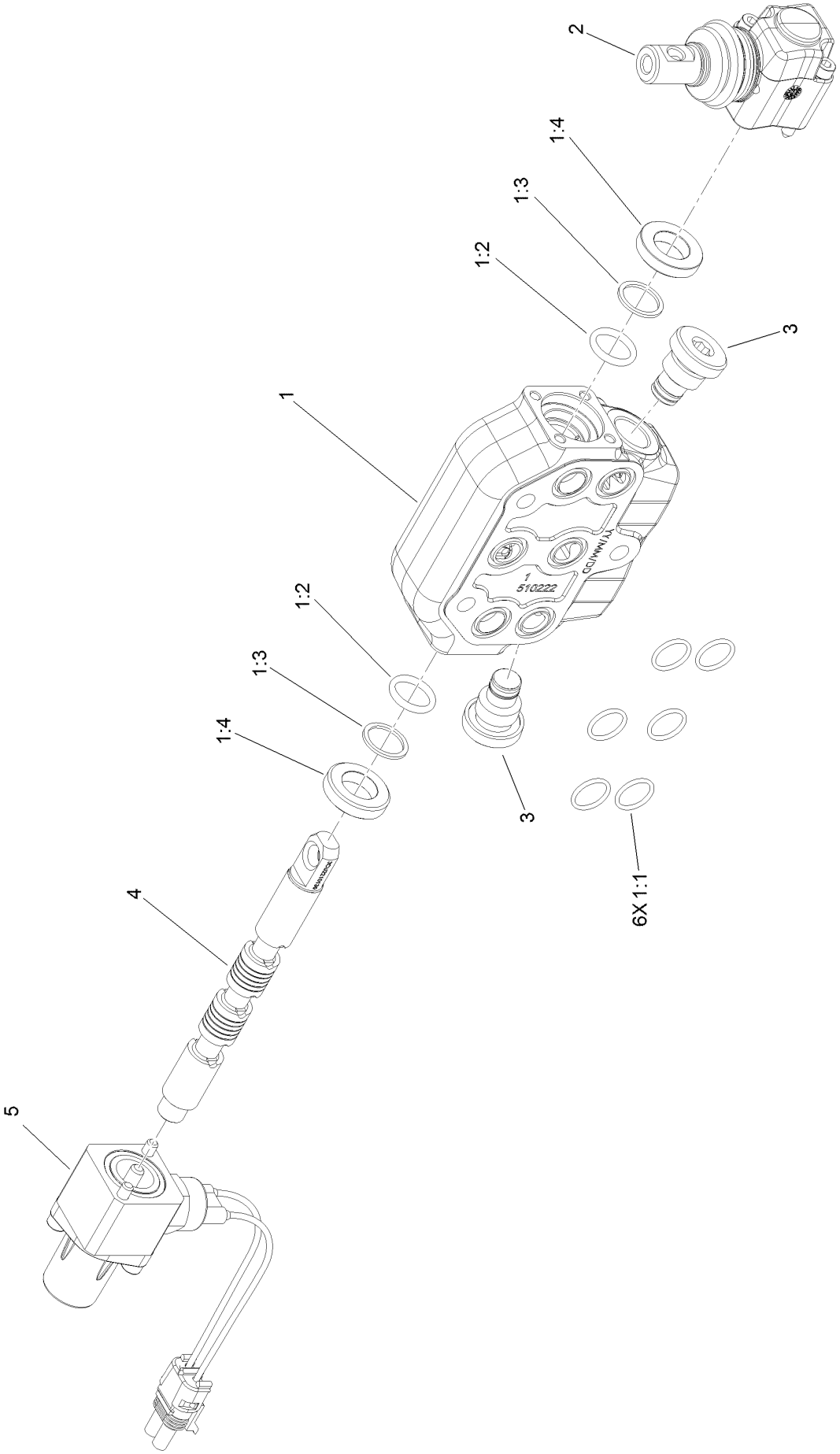

Series Valve Section Assembly No. 139-1345 (continued)

Ref.	Part Number	Qty.	Description
1	140-1118	1	Section-Working
1:1	140-1114	6	O-Ring
1:2	106-7719	2	Seal-Valve
1:3	140-1116	2	Seal-Valve
1:4	140-1117	2	Seal-Valve
2	140-1107	1	Lever-Valve
3	140-1108	2	Plug
4	140-1105	1	Valve-Spool
5	140-1106	1	Kit-Control

Parallel Valve Section Assembly No. 139-1346

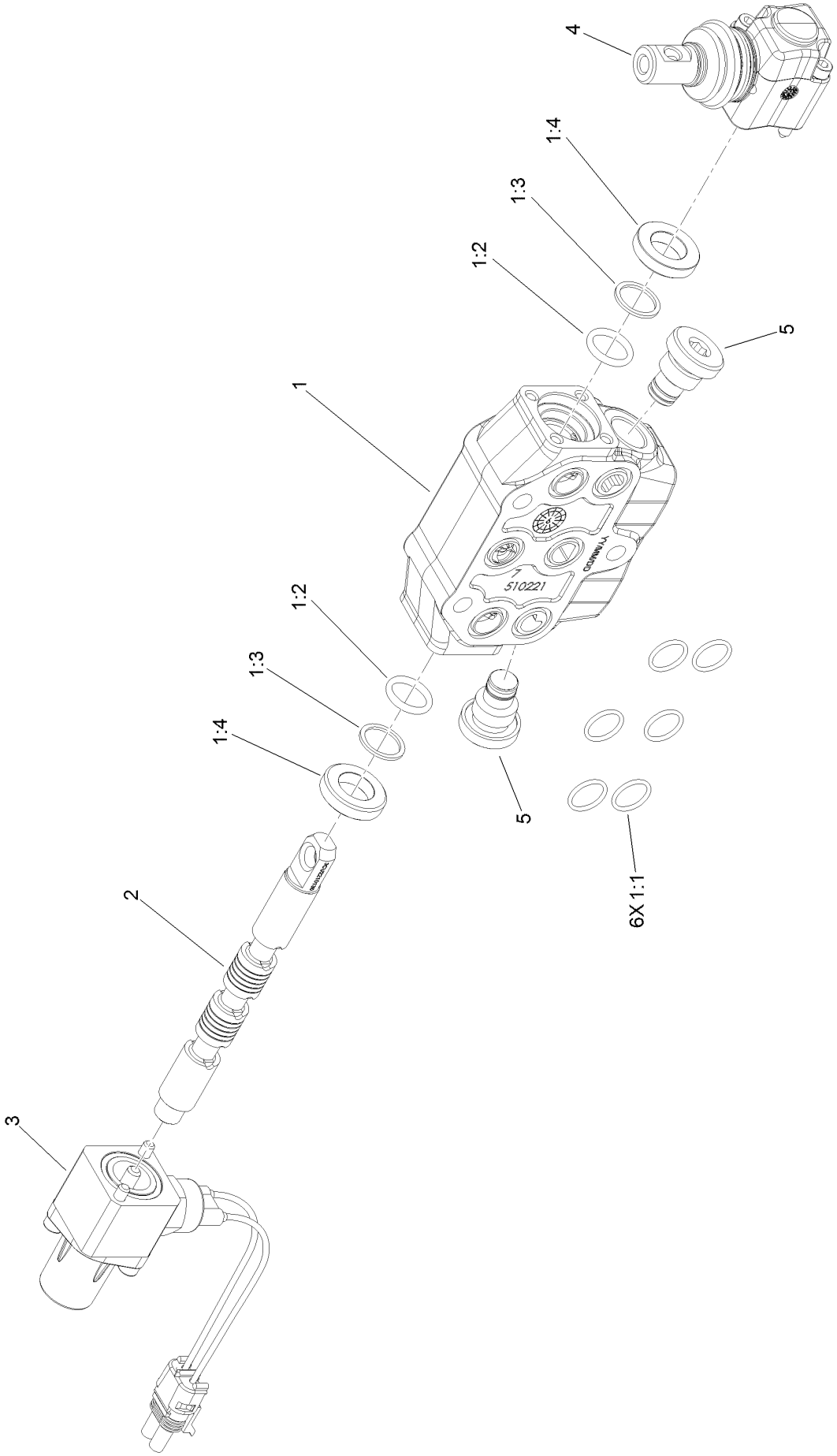

Parallel Valve Section Assembly No. 139-1346 (continued)

Ref.	Part Number	Qty.	Description
1	140-1115	1	Section-Working
1:1	140-1114	6	O-Ring
1:2	106-7719	2	Seal-Valve
1:3	140-1116	2	Seal-Valve
1:4	140-1117	2	Seal-Valve
2	140-1105	1	Valve-Spool
3	140-1106	1	Kit-Control
4	140-1107	1	Lever-Valve
5	140-1108	2	Plug

Outlet Section Assembly No. 139-1347

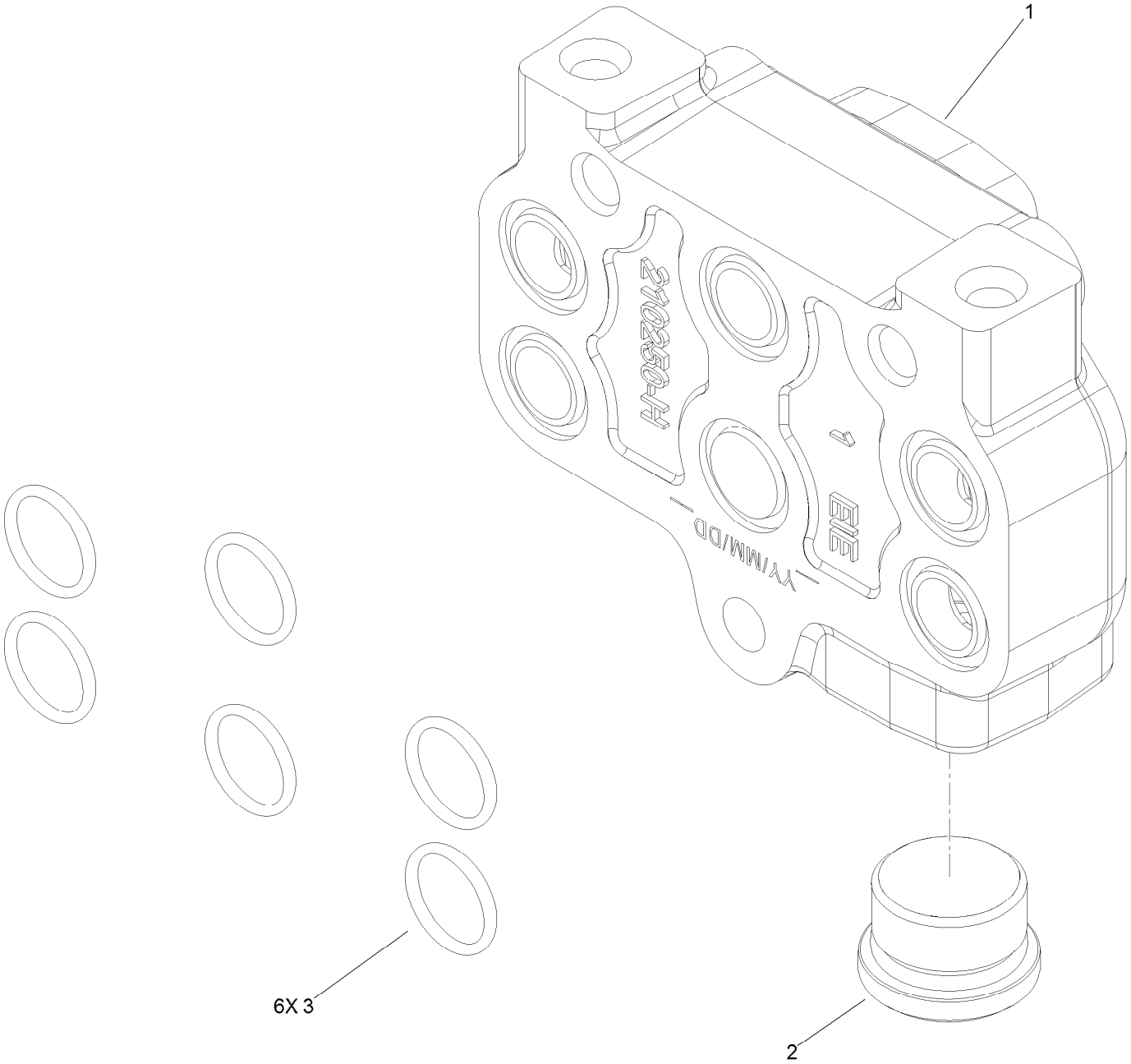

Outlet Section Assembly No. 139-1347 (continued)

Ref.	Part Number	Qty.	Description
1	140-1112	1	Cover-Outlet
2	140-1111	1	Plug
3	140-1114	6	O-Ring

Oil Cooler Assembly

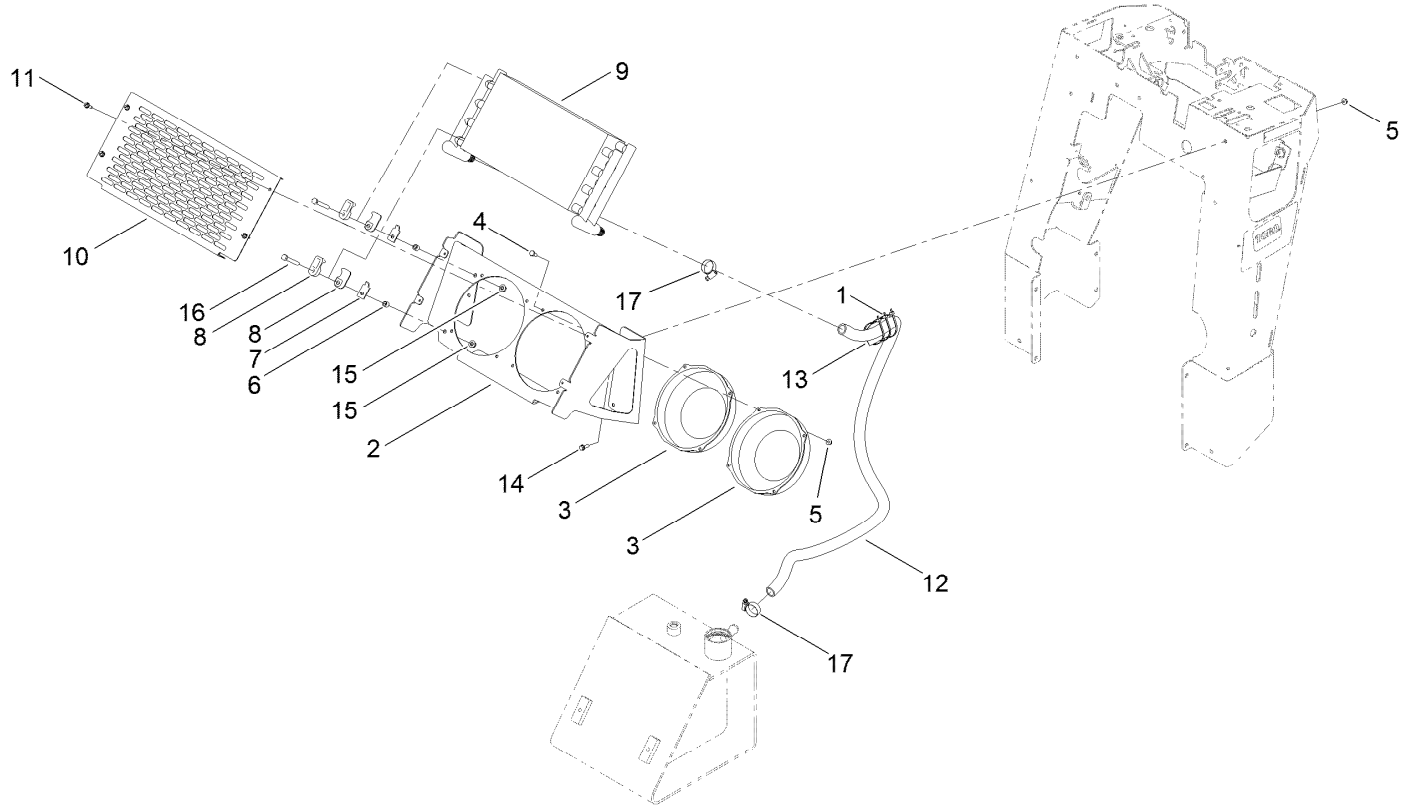

Oil Cooler Assembly (continued)

Ref.	Part Number	Qty.	Description
1	3290-379	3	Tie-Cable
2	115-9240-01	1	Mount-Cooler
3	120-7390	2	Fan
4	321-3	8	Screw-HH
5	104-7201	12	Nut-HF
6	105-5723	4	Spacer-Tube
7	131-0642	4	Plate-Support, Clamp
8	131-0733	8	Clamp
9	117-6320	1	Cooler-Oil
10	119-4633-01	1	Cover-Cooler
11	32104-95	4	Screw-HWH
12	138-3131	1	Hose-Return
13	AU112950	1	Protector-Hose
14	115-5103	4	Screw-HHF
15	104-8300	4	Nut-HF, NI
16	322-11	4	Screw-HH
17	2412-129	2	Clamp-Hose

Trencher Head and Lift Assembly

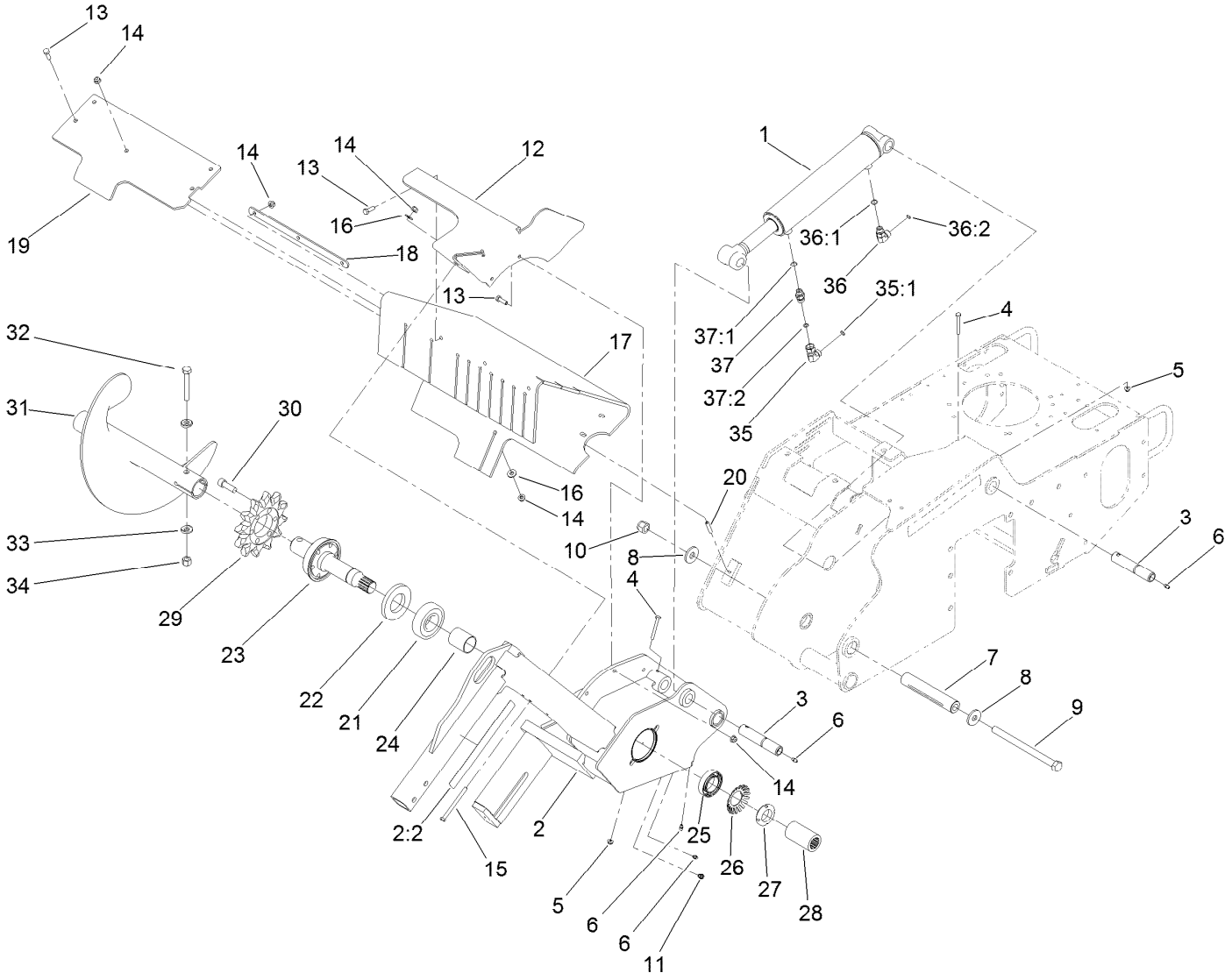

Trencher Head and Lift Assembly (continued)

Ref.	Part Number	Qty.	Description
1	137-3827	1	Hydraulic Cylinder ASM
2	117-6423	1	Trencher Head ASM
2:2	99-9952	2	Decal-Danger
3	120-7352	2	Pin-Pivot
4	321-18	2	Screw-HH
5	104-7201	2	Nut-HF
6	302-5	4	Fitting-Grease
7	121-4571	1	Spacer-Pivot
8	104-9216	2	Washer-Hardened
9	117-6327	1	Bolt-HH
10	3296-53	1	Nut-Lock, NI
11	302-34	1	Fitting-Lube
12	115-1279-03	1	Bracket-Shield
13	322-5	8	Screw-HH
14	104-8300	11	Nut-HF, NI
15	322-23	1	Screw-HH
16	3256-3	4	Washer-Flat
17	117-6317	1	Shield-Dirt
18	115-4001-03	1	Plate-Strap, Shield
19	117-6316-03	1	Clamp-Bar
20	115-4049	2	Screw-HSH
21	106-8871	1	Bearing-Ball

Ref.	Part Number	Qty.	Description
22	114-2955	1	Seal-Grease
23	117-6308	1	Shaft-Trencher
24	112-4979	1	Spacer
25	111199	1	Bearing-Ball
26	114-2956	1	Lockwasher-Bearing
27	88-1450	1	Locknut-Bearing
28	117-6315	1	Collar-Splined
29	104-1964	1	Sprocket-Trencher
30	3274-4	6	Screw-HSH
31	137-3737-03	1	Auger-Trencher
32	325-13	1	Screw-HH
33	117-3479	2	Washer-Saddle
34	3296-23	1	Nut-Lock, NI
35	340-159	1	Elbow-90
35:1	237-22	2	O-Ring
36	340-77	1	Fitting-Elbow, 90 DEG
36:1	237-22	1	O-Ring
36:2	237-42	1	O-Ring
37	115-4081	1	Valve-Check
37:1	237-42	1	O-Ring
37:2	237-22	1	O-Ring

Hydraulic Cylinder Assembly No. 137-3827

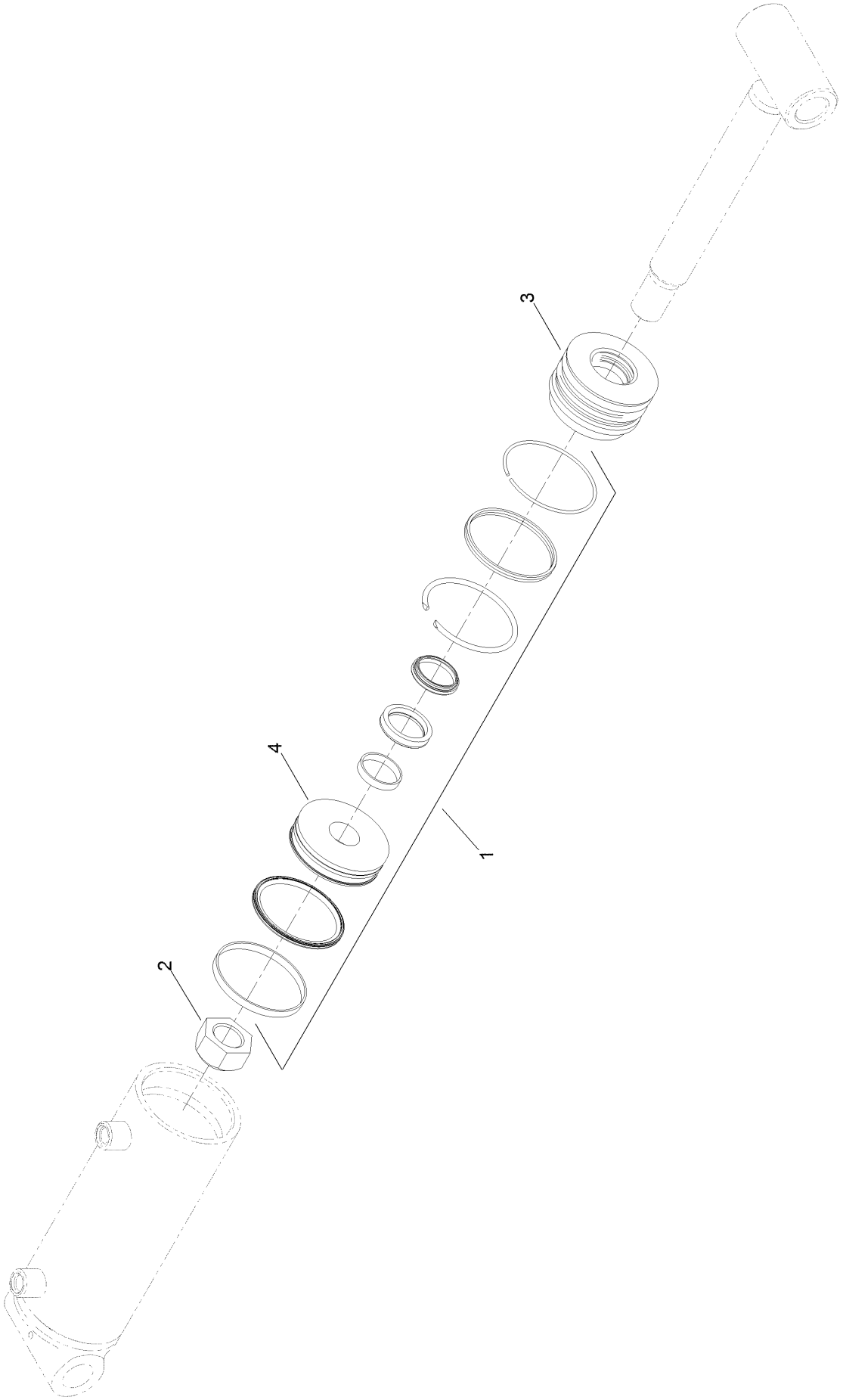

Hydraulic Cylinder Assembly No. 137-3827 (continued)

Ref.	Part Number	Qty.	Description
1	138-7140	1	Seal Kit
2	138-7141	1	Nut-Hex
3	138-7142	1	Head-Cylinder
4	138-7143	1	Piston

Handle Control Assembly

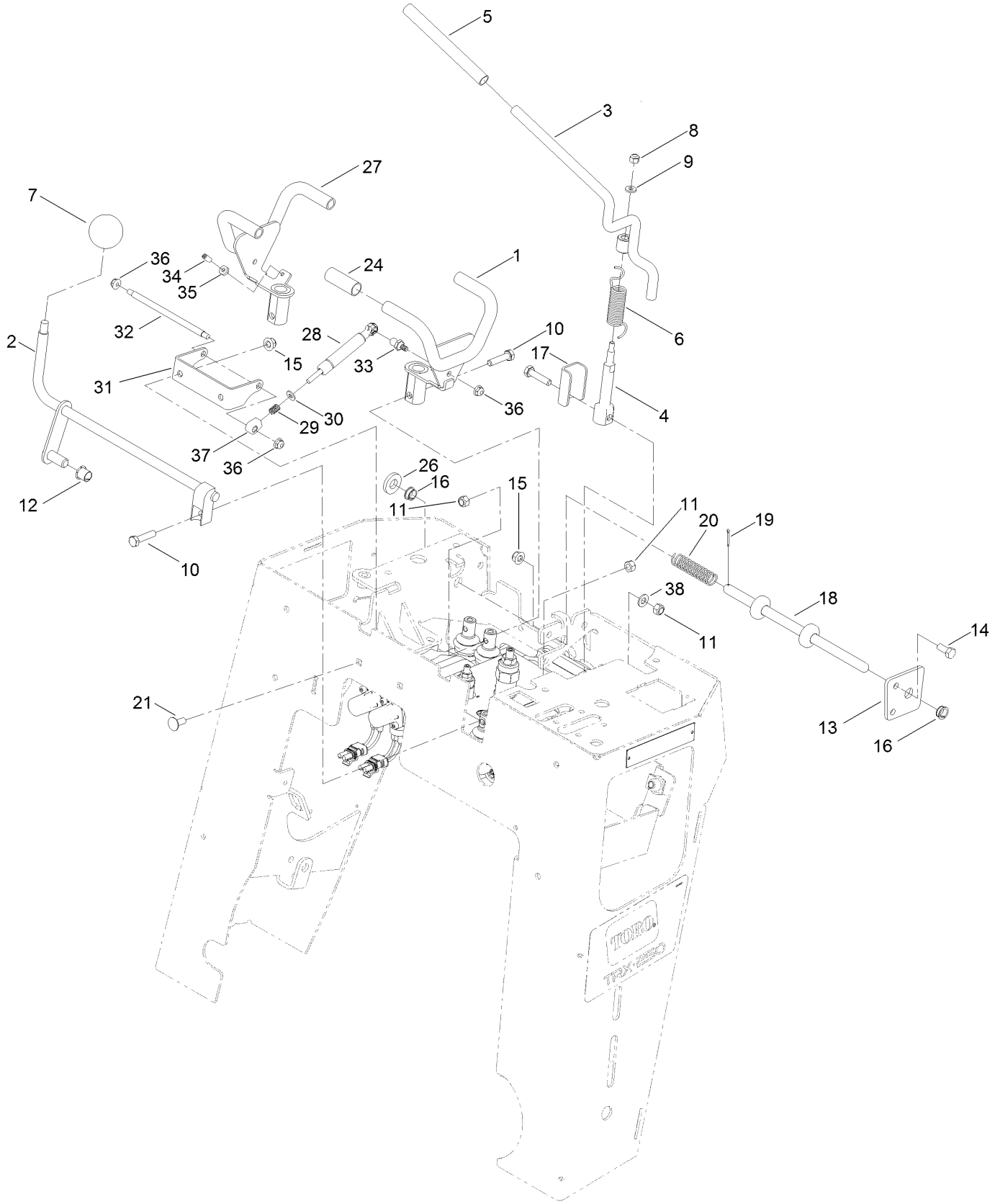

Handle Control Assembly (continued)

Ref.	Part Number	Qty.	Description
1	139-1303-03	1	Handle-Traction, LH
2	139-1306	1	Lever-Lift
3	137-7651	1	Lever-Auxiliary
4	137-7649	1	Lever-Drive, Chain
5	138-3168	1	Grip
6	112-2738	1	Spring-Torsion
7	233-21	1	Knob
8	3296-42	1	Nut-Lock, NI
9	3256-16	1	Washer-Flat
10	33114-035	4	Screw-HH
11	33024-00	4	Nut-Lock, NI
12	256-257	1	Bushing-Nyliner
13	138-3123-03	1	Plate-Bushing
14	322-3	2	Screw-HH
15	104-8300	4	Nut-HF, NI
16	116-1393	2	Bushing
17	138-3124	1	Bracket-Lever
18	138-3127	1	Rod-Lockout
19	3272-4	1	Pin-Cotter
20	95-4256	1	Spring-Compression
21	3230-23	2	Screw-CARR
24	139-1307	4	Grip
26	107-3395	1	Washer-Hardened
27	139-1305-03	1	Handle-Traction, RH
28	139-1314	2	Damper
29	139-1321	2	Spring-Compression
30	139-1323	2	Washer-Spcl
31	139-1299-03	1	Bracket-Damper
32	139-1316	1	Rod-Damper
33	139-1315	2	Stud-Ball
34	3245-3	2	Screw-Set, Hs
35	3218-1	2	Nut-Jam
36	104-7201	4	Nut-HF
37	140-1122	2	Fitting-Clevis
38	3256-23	1	Washer-Plain

Electrical Assembly

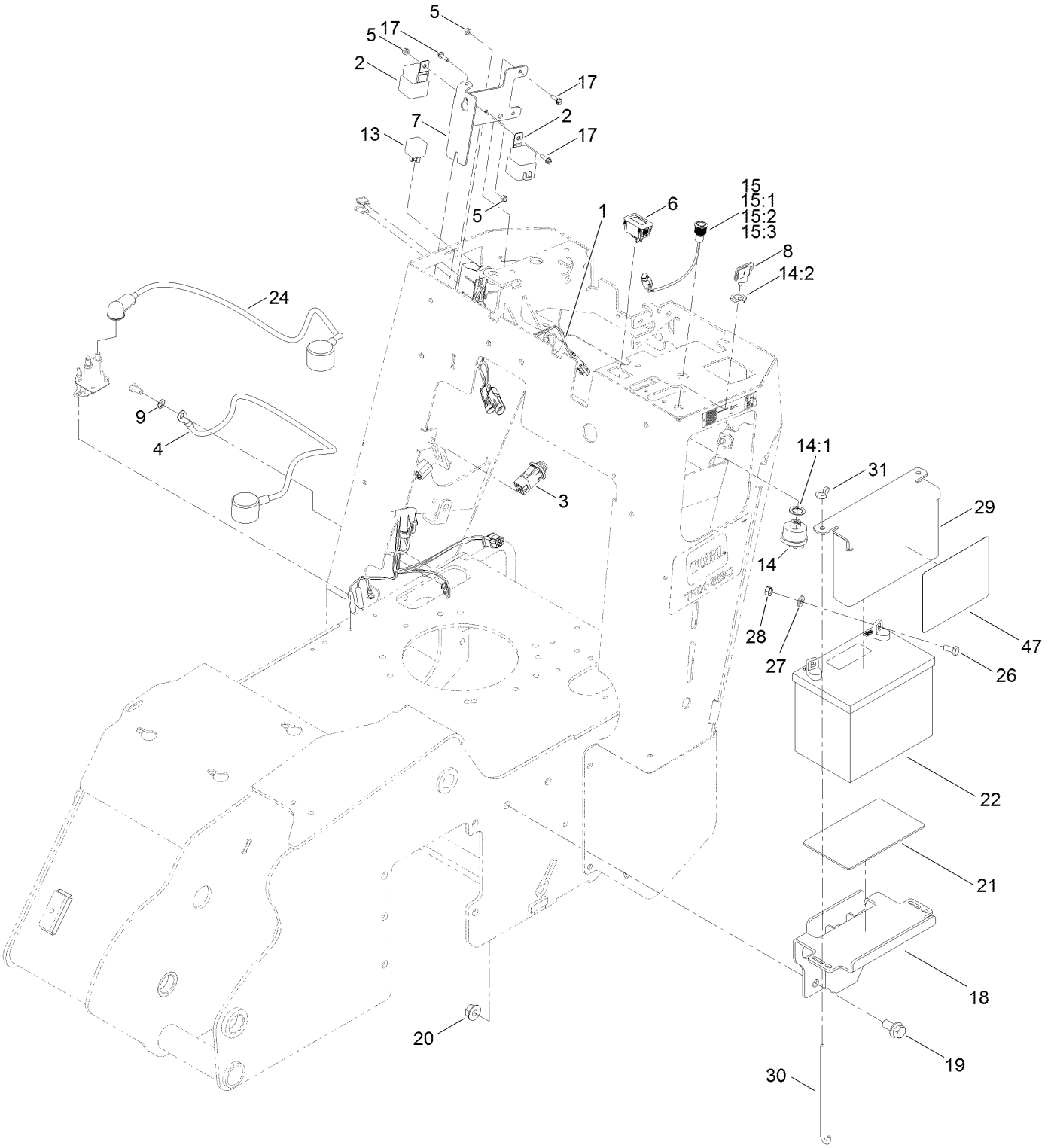

Electrical Assembly (continued)

Ref.	Part Number	Qty.	Description
1	137-7624	1	Harness-Wire
2	99-7430	2	Relay-Mini
3	100-1268	1	Switch-Plunger
4	138-3133	1	Cable-Battery, Negative
5	3296-2	4	Nut-Lock, NI
6	120-2244	1	Hourmeter
7	138-3104-03	1	Bracket-Electrical
8	63-8360	1	Key-Ignition
9	3255-7	1	Washer-Lock/EXT
13	98-7249	1	Relay
14	88-9830	1	Key Switch ASM
14:1	3254-5	1	Washer-Lock
14:2	218-461	1	Nut-HH
15	122-0630	1	Red LED Indicator Lamp ASM
15:1	122-0634	1	Gasket-LED
15:2	122-0633	1	Washer-Locking
15:3	122-0632	1	Nut-Fixing
17	32105-13	4	Screw-HWH
18	138-3114-03	1	Tray-Battery
19	3234-6	2	Screw-HHF
20	32128-49	2	Nut-HHF
21	62-4300	1	Pad-Skid, Anti
22	104-8162	1	Battery
24	138-3134	1	Cable-Battery, Positive
26	322-3	2	Screw-HH
27	3256-2	2	Washer-Flat
28	32149-1	2	Nut-Keps
29	115-6621-03	1	Plate-Hold Down, Battery
30	1-633651	2	Bolt-Holddown
31	32103-22	2	Nut-Wing
47	138-7155	1	Decal-Service

Wire Harness Assembly No. 137-7624

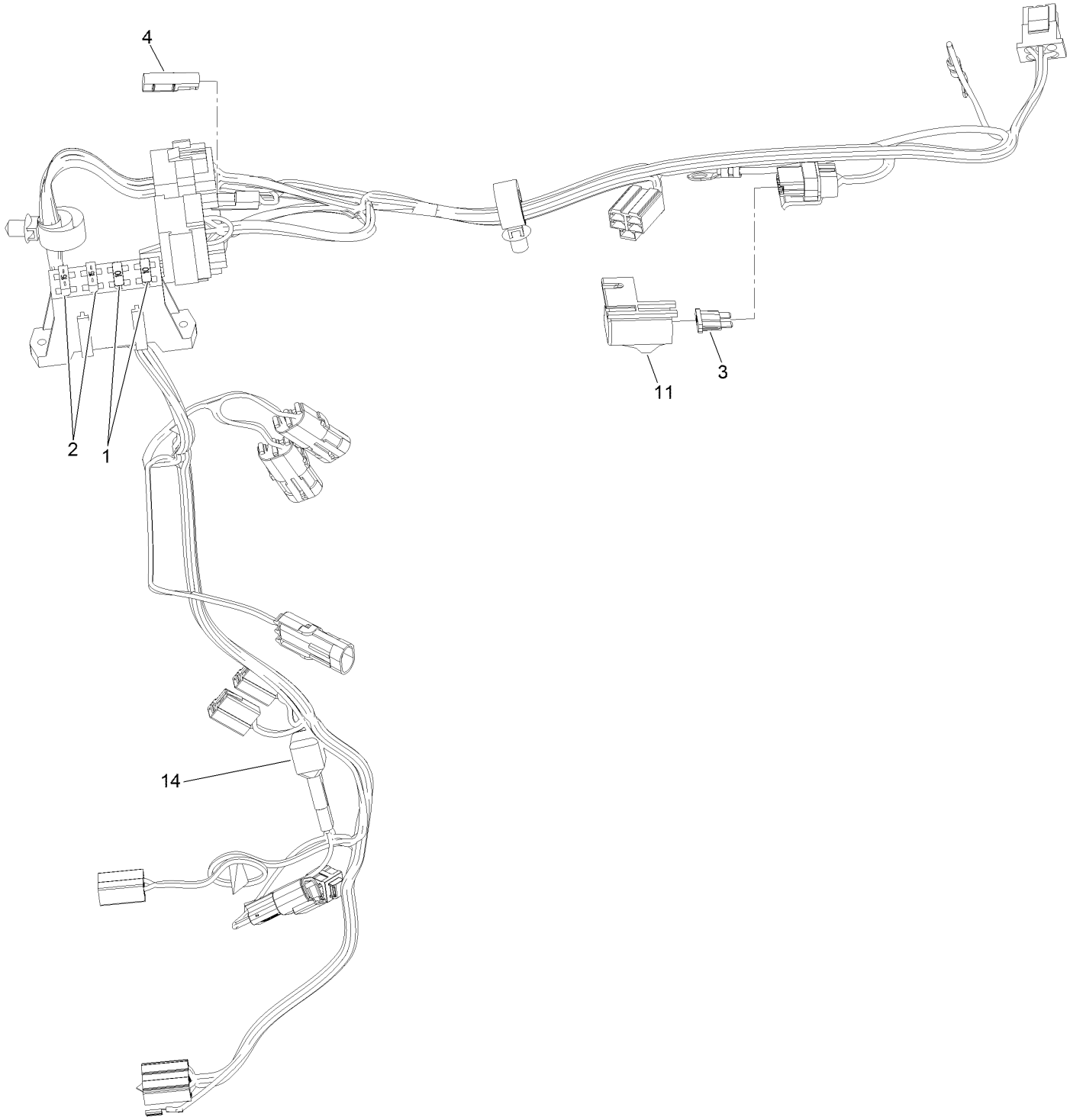

Wire Harness Assembly No. 137-7624 (continued)

Ref.	Part Number	Qty.	Description
1	218-578	2	Fuse-Blade, 10 Amp
2	109355	2	Fuse-Blade, 15 Amp
3	109103	1	Fuse-Blade, 30 Amp
4	116-0053	1	Cap-Plug
11	32180-019	1	Cover-Fuse, Single
14	121-8891	1	Resistor (1.6K Ohm)

Attachments and Accessories

For 22984 TRX-300 Trencher

Product Name	Model/Part
Crumber Kit	22477
24in Trencher Boom	22975
36in Trencher Boom	22976
48in Trencher Boom	22977
24in X 4in Soil Chain	22480
24in X 6in Soil Chain	22483
36in X 4in Soil Chain	22486
36in X 6in Soil Chain	22490
24in X 4in Combination Chain	22481
24in X 6in Combination Chain	22484
36in X 4in Combination Chain	22487
36in X 6in Combination Chain	22491
24in X 4in Rock Tooth Chain	22482
24in X 6in Rock Tooth Chain	22485
36in X 4in Rock Tooth Chain	22488
36in X 6in Rock Tooth Chain	22489
48in x 4in Soil Chain	22492
48in x 4in Combination Chain	22493
48in x 6in Soil Chain	22494
48in x 6in Combination Chain	22495
24in X 4in Bullet Chain	22496
24in X 6in Bullet Chain	22497
36in X 4in Bullet Chain	22498
36in X 6in Bullet Chain	22499
Bore Drive Attachment	22978
Backfill Blade	22980
8in Chain Conversion Kit for 36in Soil Chain	117-3480
Spark Arrestor Screen	94-8157

Notes:

Notes:

Notes:

TORO®

Count on it.