FORM NO. 3324–324

TORO®

PART NO. 100–4505

INSTALLATION INSTRUCTIONS

CENTER PLATE KIT

For 2WD Workman

⚠ CAUTION

Before servicing or making adjustments to the machine, stop engine and remove key from the switch.

1. Clean transaxle thoroughly to prevent any dirt or other contaminants from entering during removal (Fig. 1).

2. Remove transaxle from Workman. Refer to Workman Service Manual for transaxle removal and installation instructions.

3. Remove sealing cap and inspect snap ring. If snap ring is broken, make sure no pieces have or will fall into transaxle when center plate is removed.

4. Drain and clean transaxle and screen if snap ring is broken.

5. Remove center plate from transaxle.

6. Remove and discard old snap ring and shims.

7. Remove input shaft oil seal and press in new one.

8. Install new center plate, shim with tab and other appropriate shims from shim set to produce end play of .000–.0039 inch (00–.10mm) when snap ring is installed.

Note: Shim with tab (0.63" thick) should be positioned against bearing.

Note: Thickest shim, from shim set, should be positioned against snap ring.

To measure end play

Block one rear wheel while allowing other wheel to rotate freely. With shims and snap ring installed, rotate tire back and forth to use–up all back lash. One direction will pull shaft and bearing away from snap ring. Rotate tire in this direction and use a feeler gauge to measure the space between the snap ring and the shim set. Be sure shim set is held against bearing during measurement.

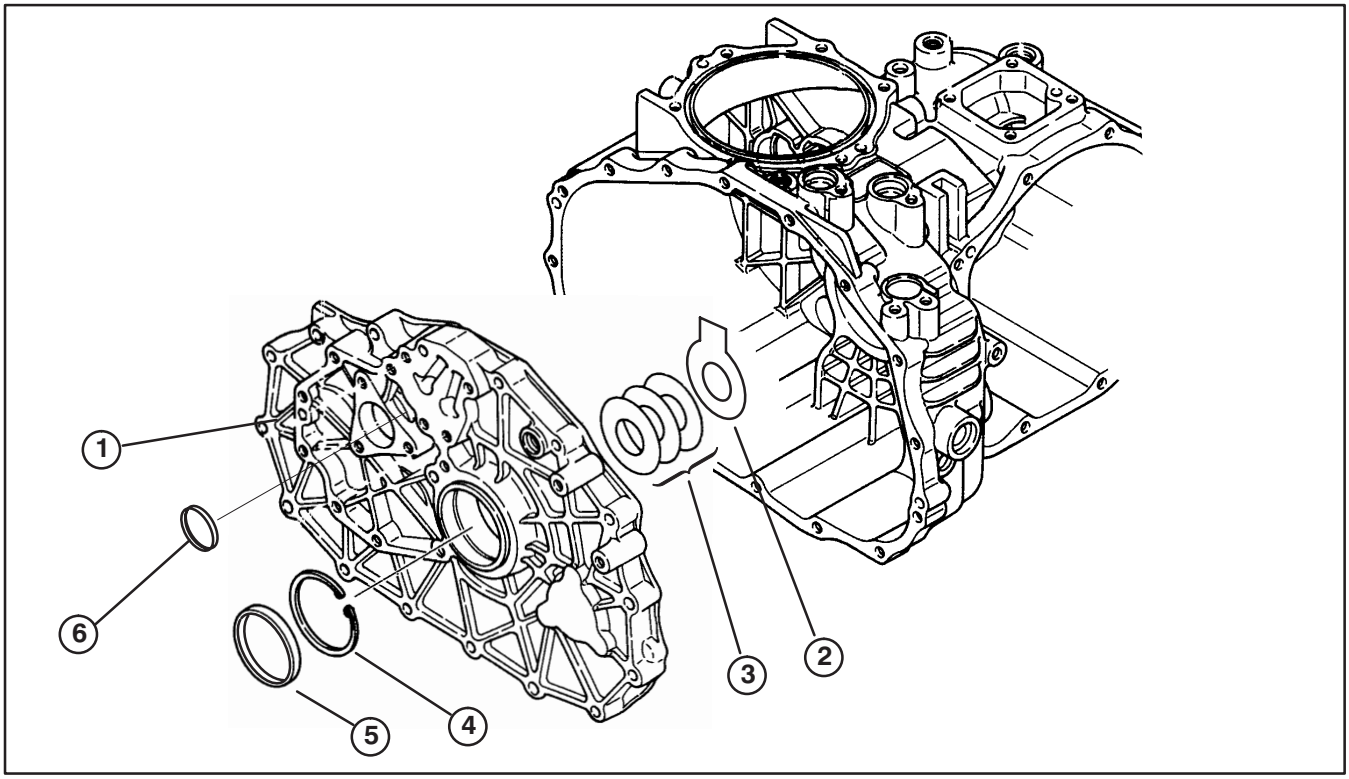

Figure 1

1. Center Plate
2. Shim with Tab
3. Shim Set
4. Snap Ring
5. Sealing Cap
6. Oil seal

© The TORO Company – 1999