Form No. 3438-332 Rev A

TORO®

Count on it.

Operator's Manual

TX 427 Compact Tool Carrier

Model No. 22321—Serial No. 404684850 and Up
Model No. 22321G—Serial No. 405700000 and Up
Model No. 22322—Serial No. 405700000 and Up
Model No. 22342HD—Serial No. 405700000 and Up

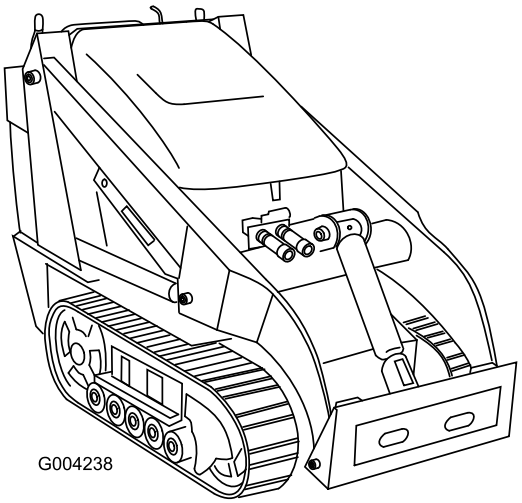

Register at www.Toro.com.
Original Instructions (EN)

CE

3438-332 A

This product complies with all relevant European directives; for details, please see the separate product specific Declaration of Conformity (DOC) sheet.

It is a violation of California Public Resource Code Section 4442 or 4443 to use or operate the engine on any forest-covered, brush-covered, or grass-covered land unless the engine is equipped with a spark arrester, as defined in Section 4442, maintained in effective working order or the engine is constructed, equipped, and maintained for the prevention of fire.

The enclosed engine owner's manual is supplied for information regarding the US Environmental Protection Agency (EPA) and the California Emission Control Regulation of emission systems, maintenance, and warranty. Replacements may be ordered through the engine manufacturer.

⚠ WARNING

CALIFORNIA
Proposition 65 Warning

The engine exhaust from this product contains chemicals known to the State of California to cause cancer, birth defects, or other reproductive harm.

Battery posts, terminals, and related accessories contain lead and lead compounds, chemicals known to the State of California to cause cancer and reproductive harm. Wash hands after handling.

Use of this product may cause exposure to chemicals known to the State of California to cause cancer, birth defects, or other reproductive harm.

Introduction

This machine is a compact tool carrier intended for use in various earth and materials moving activities for landscaping and construction work. It is designed to operate a wide variety of attachments each of which perform a specialized function. Using this product for purposes other than its intended use could prove dangerous to you and bystanders.

Read this information carefully to learn how to operate and maintain your product properly and to avoid injury and product damage. You are responsible for operating the product properly and safely.

Visit www.Toro.com for product safety and operation training materials, accessory information, help finding a dealer, or to register your product.

Whenever you need service, genuine Toro parts, or additional information, contact an Authorized Service Dealer or Toro Customer Service and have the model and serial numbers of your product ready. Figure 1 identifies the location of the model and serial numbers on the product. Write the numbers in the space provided.

Important: **With your mobile device, you can scan the QR code on the serial number decal (if equipped) to access warranty, parts, and other product information.**

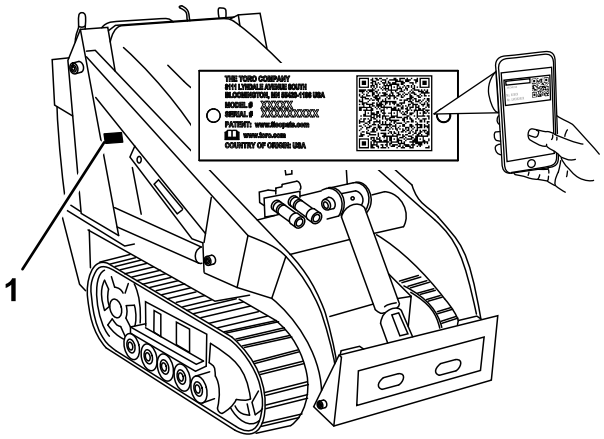

g242614

Figure 1

1. Model and serial number location

Model No. _____

Serial No. _____

This manual identifies potential hazards and has safety messages identified by the safety-alert symbol (Figure 2), which signals a hazard that may cause serious injury or death if you do not follow the recommended precautions.

g000502

Figure 2

1. Safety-alert symbol

This manual uses 2 words to highlight information. **Important** calls attention to special mechanical information and **Note** emphasizes general information worthy of special attention.

© 2020—The Toro® Company
8111 Lyndale Avenue South
Bloomington, MN 55420

Contact us at www.Toro.com.
Printed in the USA
All Rights Reserved

Contents

Safety 4
General Safety 4
Safety and Instructional Decals 5
Product Overview 9
Controls 9
Specifications 13
Attachments/Accessories 13
Before Operation 14
Before Operation Safety 14
Adding Fuel 14
Performing Daily Maintenance 15
During Operation 15
During Operation Safety 15
Starting the Engine 17
Driving the Machine 17
Shutting Off the Engine 17
Using Attachments 17
After Operation 19
After Operation Safety 19
Moving a Non-Functioning Machine 19
Hauling the Machine 20
Lifting the Machine 21
Maintenance 22
Maintenance Safety 22
Recommended Maintenance Schedule(s) 22
Pre-Maintenance Procedures 24
Using the Cylinder Lock 24
Accessing Internal Components 24
Lubrication 27
Greasing the Machine 27
Engine Maintenance 28
Engine Safety 28
Servicing the Air Cleaner 28
Servicing the Carbon Canister 29
Servicing the Engine Oil 29
Servicing the Spark Plug(s) 31
Fuel System Maintenance 32
Changing the Fuel Filter 32
Draining the Fuel Tank 33
Electrical System Maintenance 33
Electrical System Safety 33
Servicing the Battery 33
Drive System Maintenance 35
Servicing the Tracks 35
Brake Maintenance 39
Testing the Parking Brake 39
Belt Maintenance 39
Inspecting and Replacing the Drive Belt 39
Controls System Maintenance 41
Adjusting the Controls 41
Hydraulic System Maintenance 43
Hydraulic System Safety 43
Relieving Hydraulic Pressure 43
Hydraulic-Fluid Specifications 43
Checking the Hydraulic-Fluid Level 44
Replacing the Hydraulic Filter 44
Changing the Hydraulic Fluid 44
Cleaning 46
Removing Debris 46
Cleaning the Chassis 46
Storage 48
Storage Safety 48
Storage 48
Troubleshooting 49

Safety

General Safety

⚠ DANGER

There may be buried utility lines in the work area. Digging into them may cause a shock or an explosion.

Have the property or work area marked for buried lines and do not dig in marked areas. Contact your local marking service or utility company to have the property marked (for example, in the US, call 811 or in Australia, call 1100 for the nationwide marking service).

Always follow all safety instructions to avoid serious injury or death.

- Do not carry a load with the arms raised; always carry loads close to the ground.
- Slopes are a major factor related to loss-of-control and tip-over accidents, which can result in severe injury or death. Operating the machine on any slope or uneven terrain requires extra caution.
- Operate the machine up and down slopes with the heavy end of the machine uphill and the load close to the ground. Weight distribution changes with attachments. An empty bucket makes the rear of the machine the heavy end, and a full bucket makes the front of the machine the heavy end. Most other attachments make the front of the machine the heavy end.
- Have the property or work area marked for buried lines and other objects, and do not dig in marked areas.
- Read and understand the content of this *Operator's Manual* before starting the engine.
- Use your full attention while operating the machine. Do not engage in any activity that causes distractions; otherwise, injury or property damage may occur.
- Never allow children or untrained people to operate the machine.
- Keep your hands and feet away from the moving components and attachments.
- Do not operate the machine without the guards and other safety protective devices in place and working on the machine.
- Keep bystanders and children out of the operating area.
- Stop the machine, shut off the engine, and remove the key before servicing, fueling, or unclogging the machine.

Improperly using or maintaining this machine can result in injury. To reduce the potential for injury, comply with these safety instructions and always pay attention to the safety-alert symbol ⚠, which means Caution, Warning, or Danger—personal safety instruction. Failure to comply with these instructions may result in personal injury or death.

Safety and Instructional Decals

Safety decals and instructions are easily visible to the operator and are located near any area of potential danger. Replace any decal that is damaged or missing.

Battery Symbols

Some or all of these symbols are on your battery.

1. Explosion hazard
2. No fire, open flame, or smoking
3. Caustic liquid/chemical burn hazard
4. Wear eye protection.
5. Read the *Operator's Manual*.
6. Keep bystanders away from the battery.
7. Wear eye protection; explosive gases can cause blindness and other injuries.
8. Battery acid can cause blindness or severe burns.
9. Flush eyes immediately with water and get medical help fast.
10. Contains lead; do not discard

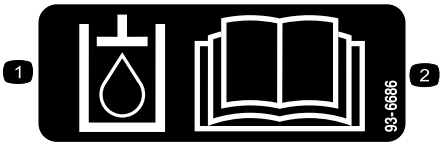

decal93-6686

93-6686

1. Hydraulic fluid
2. Read the *Operator's Manual*.

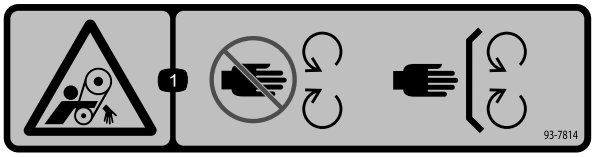

decal93-7814

93-7814

1. Entanglement hazard, belt—stay away from moving parts; keep all guards and shields in place.

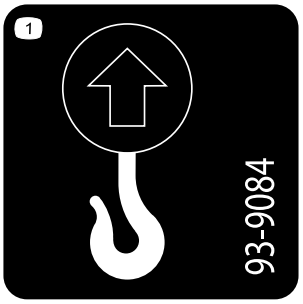

decal93-9084

93-9084

1. Lift point/Tie-down point

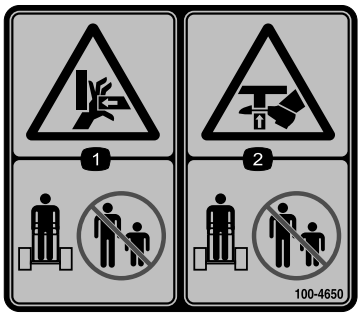

decal100-4650

100-4650

1. Crushing hazard of hand—keep bystanders away.
2. Crushing hazard of foot—keep bystanders away.

decal100-8821

100-8821

1. Crushing hazard from above; cutting hazard of hand—stay away from the front of the traction unit when the loader arms are raised.

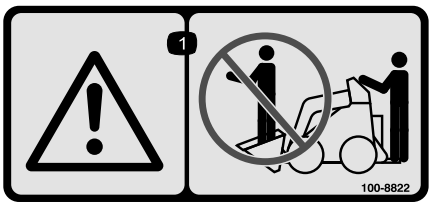

decal100-8822

100-8822

1. Warning—do not carry passengers.

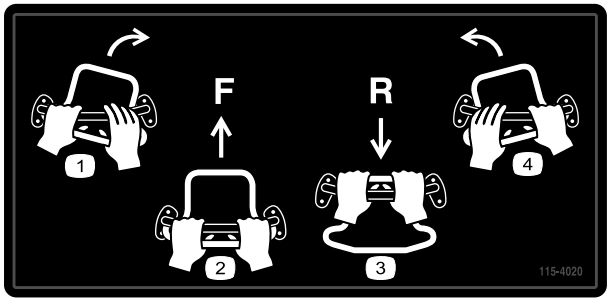

decal115-4020

115-4020

1. Turn right
2. Forward
3. Reverse
4. Turn left

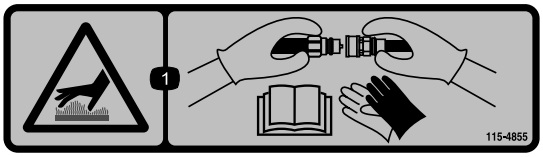

decal115-4855

115-4855

1. Hot surface/burn hazard—wear protective gloves when handling the hydraulic couplers and read the *Operator's Manual* for information on handling hydraulic components.

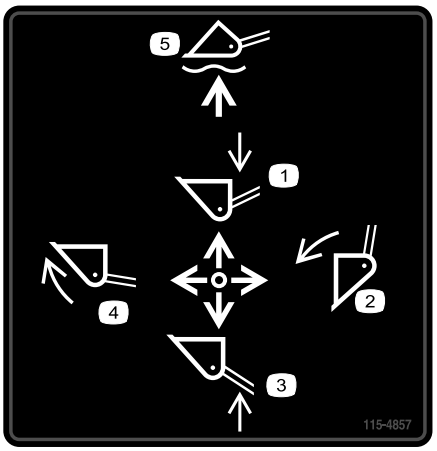

decal115-4857

115-4857

1. Lower the loader arms.
2. Dump the bucket.
3. Raise the loader arms.
4. Curl the bucket.
5. Float the bucket on the ground.

---

decal115-4858

115-4858

1. Crushing hazard of hands or feet—install the cylinder lock.

---

decal115-4859

115-4859

1. Disengaged
2. Parking brake
3. Engaged

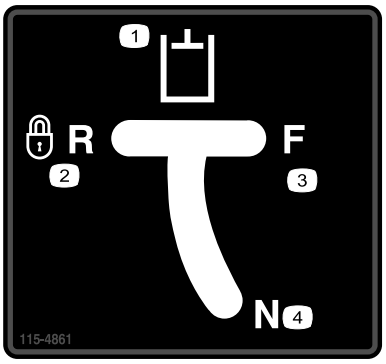

decal115-4861

115-4861

1. Auxiliary hydraulics
2. Locked reverse (detent)
3. Forward
4. Neutral (off)

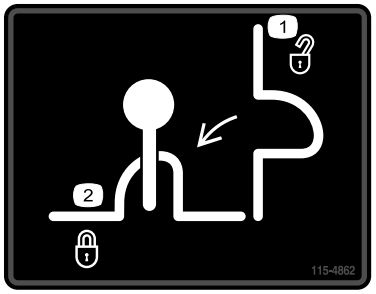

decal115-4862

115-4862

1. Loader-valve lock—unlocked
2. Loader-valve lock—locked

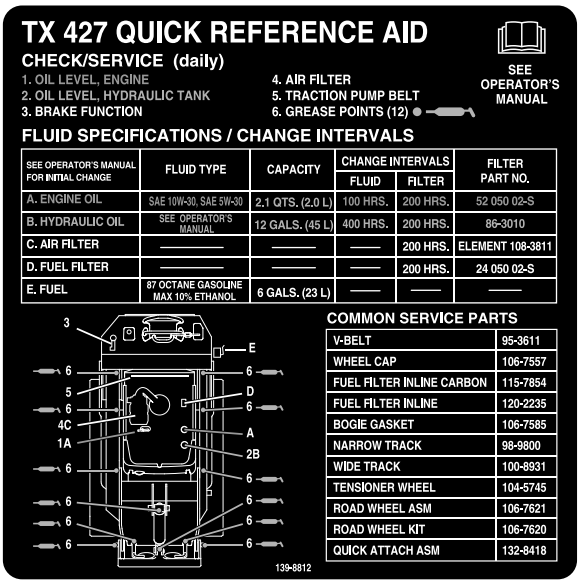

decal139-8812

139-8812

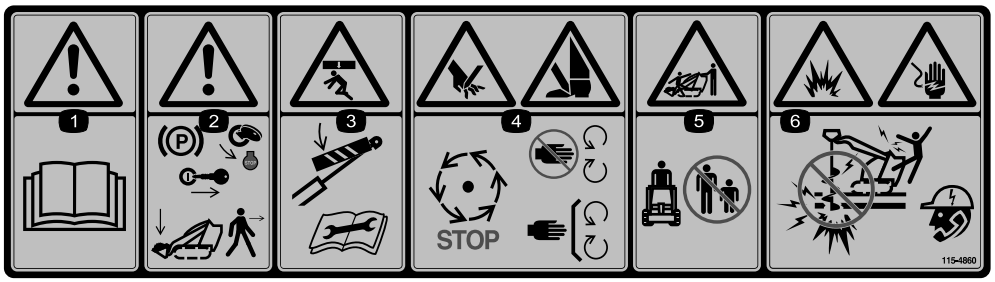

decal115-4860

115-4860

1. Warning—read the *Operator's Manual*.
2. Warning—lower the loader arms, engage the parking brake, shut off the engine, and remove the key before leaving the machine.
3. Crushing hazard from above—install the cylinder lock and read the *Operator's Manual* before performing maintenance.
4. Cutting hazard of hands or feet—wait for all moving parts to stop; stay away from moving parts; keep all guards and shields in place.
5. Crushing/dismemberment hazard of bystanders—keep bystanders away.
6. Explosion hazard; electrical shock hazard—do not operate if power lines may be present; call your local utility company.

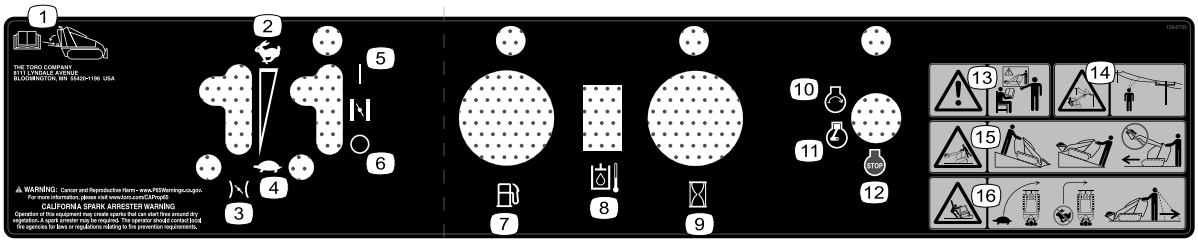

decal138-0799

138-0799

1. Read the *Operator's Manual* stored in your machine.
2. Fast
3. Throttle
4. Slow
5. Choke—on
6. Choke—off
7. Fuel
8. Hydraulic fluid temperature
9. Hour meter
10. Engine—start
11. Engine—run
12. Engine—shut off
13. Warning—do not operate this machine unless you are trained.
14. Electrical shock hazard, overhead power lines—watch for overhead power lines.
15. Tipping hazard—move the traction unit with the heavy end uphill; carry loads low; do not drive the machine with the load raised.
16. Tipping hazard—drive slowly when turning; do not turn sharply while traveling fast; look behind and down when moving in reverse.

Product Overview

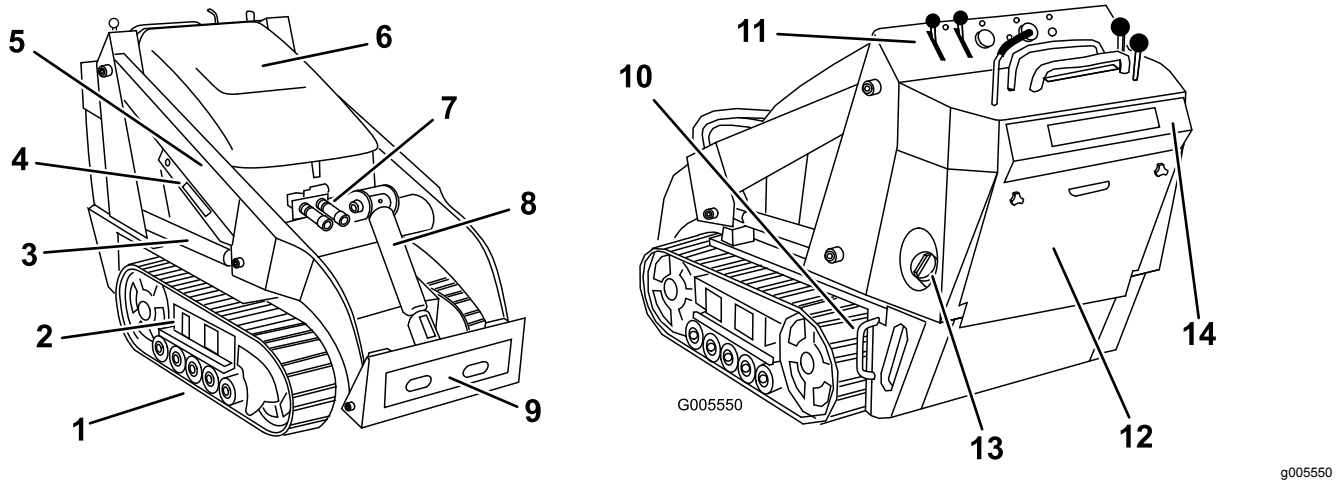

Figure 3

1. Track
2. Track-adjustment chamber
3. Lift cylinder
4. Cylinder lock
5. Loader arms
6. Hood
7. Auxiliary hydraulic couplers
8. Tilt cylinder
9. Mount plate
10. Tie-down/lift loop
11. Control panel
12. Rear-access cover
13. Fuel tank
14. Reverse-safety plate

Controls

Become familiar with all the controls (Figure 4) before you start the engine and operate the traction unit.

Control Panel

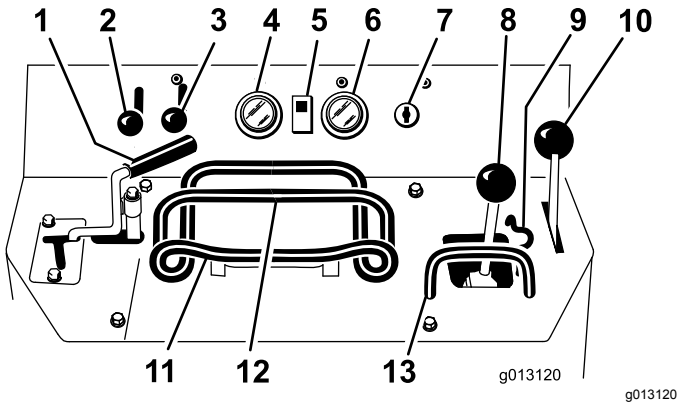

Figure 4

1. Auxiliary hydraulics lever
2. Throttle lever
3. Choke lever
4. Fuel gauge
5. Hydraulic-fluid-temperature light
6. Hour meter/tachometer
7. Key switch
8. Loader-arm/attachment-tilt lever
9. Loader-valve lock
10. Parking-brake lever
11. Traction control
12. Reference bar
13. Loader-control-reference bar

Key Switch

The key switch, used to start and shut off the engine, has 3 positions: OFF, RUN, and START. Refer to Starting the Engine (page 17).

Throttle Lever

Move the control forward to increase the engine speed and rearward to decrease speed.

Choke Lever

Before starting a cold engine, move the choke lever forward. After the engine starts, regulate the choke to keep the engine running smoothly. As soon as possible, move the choke lever all the way rearward.

Note: A warm engine requires little or no choking.

Reference Bar

When driving the traction unit, use the reference bar as a handle and a leverage point for controlling the traction control and the auxiliary-hydraulics lever. To ensure smooth, controlled operation, do not take both hands off the reference bar while operating the machine.

Traction Control

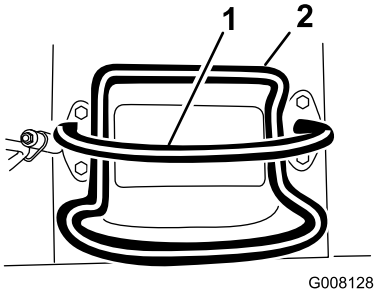

g008128

Figure 5

1. Reference bar
2. Traction control

- To move forward, move the traction control forward (Figure 6).

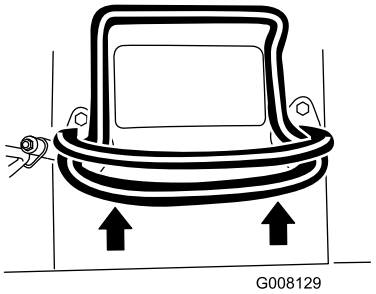

g008129

Figure 6

- To move rearward, move the traction control rearward (Figure 7).

  Important: **When reversing, look behind you for obstructions and keep your hands on the reference bar.**

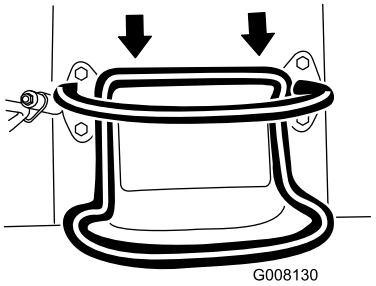

g008130

Figure 7

- To turn right, rotate the traction control clockwise (Figure 8).

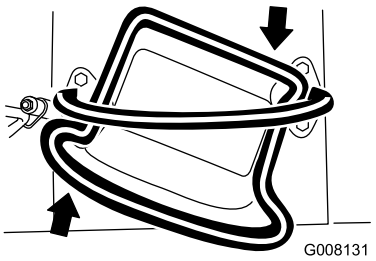

g008131

Figure 8

- To turn left, rotate the traction control counterclockwise (Figure 9).

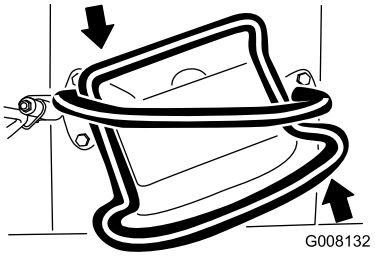

g008132

Figure 9

- To stop the machine, release the traction control (Figure 5).

Note: The farther you move the traction control in any direction, the faster the machine moves in that direction.

Loader Arm/Attachment-Tilt Lever

- To tilt the attachment forward, slowly move the lever to the right (Figure 10).
- To tilt the attachment rearward, slowly move the lever to the left (Figure 10).
- To lower the loader arms, slowly move the lever forward (Figure 10).
- To raise the loader arms, slowly move the lever rearward (Figure 10).
- To lower the loader arms to a detent (float) position, push the lever fully forward (Figure 10).

  Note: This allows attachments such as the leveler and the hydraulic blade to follow the contours of the ground (i.e., float) when grading.

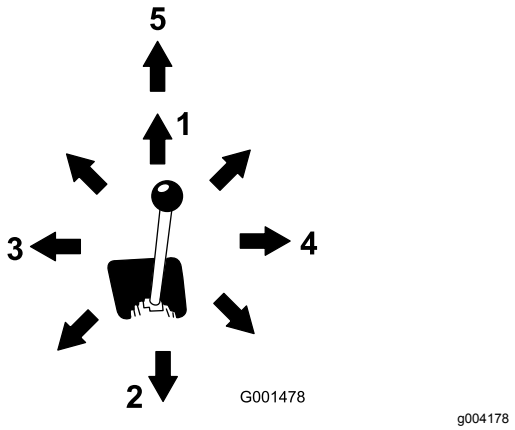

Figure 10

1. Detent (float) position
2. Lower the loader arms.
3. Raise the loader arms.
4. Tilt the attachment rearward.
5. Tilt the attachment forward.

By moving the lever to an intermediate position (e.g., forward and left), you can move the loader arms and tilt the attachment at the same time.

Loader-Valve Lock

The loader-valve lock secures the loader arm/attachment-tilt lever so that you cannot push it forward. This helps to ensure that no one accidentally lowers the loader arms during maintenance. Secure the loader valve with the lock, in addition to the cylinder locks, any time you need to shut off the machine with the loader arms raised. Refer to Using the Cylinder Lock (page 24).

To set the lock, lift up on it so that it clears the hole in the control panel and swing it to the left, in front of the loader-arm lever, pushing it down into the locked position (Figure 11).

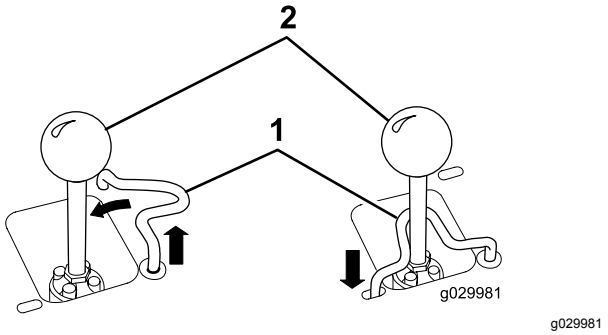

Figure 11

1. Loader arm/attachment-tilt lever
2. Loader-valve lock

Loader-Control-Reference Bar

The loader-control-reference bar helps stabilize your hand while operating the loader arm/attachment-tilt lever (Figure 4).

Auxiliary-Hydraulics Lever

- To operate a hydraulic attachment in the forward direction, rotate the auxiliary-hydraulics lever rearward and pull it down to the reference bar (Figure 12, number 1).
- To operate a hydraulic attachment in the reverse direction, rotate the auxiliary-hydraulics lever rearward, then move it left into the upper slot (Figure 12, number 2).

Note: If you release the lever while in the FORWARD position, the lever automatically returns to the NEUTRAL position (Figure 12, number 3). If it is in the REVERSE position, it remains there until you pull it out of the slot.

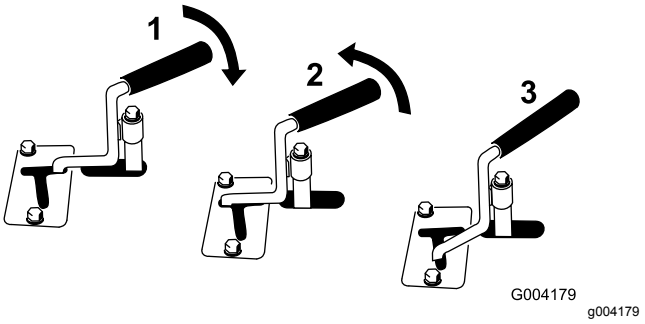

Figure 12

1. Forward-flow hydraulics
2. Reverse-flow hydraulics
3. Neutral

Hour Meter/Tachometer

When the engine is off, the hour meter/tachometer displays the number of hours of operation logged on the machine. When the engine is running, it displays the speed of the engine in revolutions per minute (rpm).

After 50 hours and then every 100 hours thereafter (i.e., 150, 250, 350, etc.) the screen displays CHG OIL to remind you to change the engine oil.

After every 100 hours, the screen displays SVC to remind you to perform the other maintenance procedures based on a 100-, 200-, or 400-hour schedule.

Note: These reminders appear 3 hours prior to the service interval time and flash at regular intervals for 6 hours.

Parking-Brake Lever

- To engage the parking brake, push the lever forward and to the left and then pull it rearward (Figure 13).

  Note: The traction unit may roll slightly before the brakes engage in the drive sprocket.

- To release the brake, push the lever forward and then right, into the notch (Figure 13).

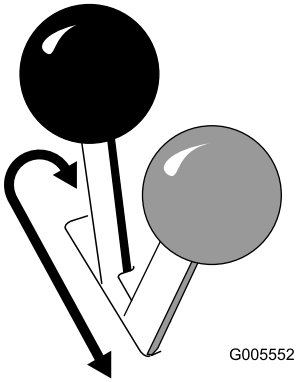

g005552

Figure 13

Fuel Gauge

This gauge measures the amount of fuel in the fuel tank(s).

Hydraulic-Fluid Temperature Light

If the hydraulic fluid gets too hot, this light illuminates and an audible alarm sounds. If this happens, shut off the engine and allow the traction unit to cool.

Specifications

Note: Specifications and design are subject to change without notice.

Model 22321, 22321G, 22342HD	
Width	86 cm (34 inches)
Length	180 cm (71 inches)
Height	117 cm (46 inches)
Weight	853 kg (1,880 lb)
Operating capacity with standard bucket	227 kg (500 lb)
Tipping capacity with standard bucket	671 kg (1,480 lb)
Wheelbase	79 cm (31 inches)
Dump height (with standard bucket)	119 cm (47 inches)
Reach—fully raised (with standard bucket)	55 cm (22 inches)
Height to hinge pin (with standard bucket in highest position)	168 cm (66 inches)

Model 22322	
Width	104 cm (41 inches)
Length	180 cm (71 inches)
Height	117 cm (46 inches)
Weight	941 kg (2,075 lb)
Operating capacity with standard bucket	227 kg (500 lb)
Tipping capacity with standard bucket	647 kg (1,427 lb)
Wheelbase	79 cm (31 inches)
Dump height (with standard bucket)	119 cm (47 inches)
Reach—fully raised (with standard bucket)	55 cm (22 inches)
Height to hinge pin (with standard bucket in highest position)	168 cm (66 inches)

Attachments/Accessories

A selection of Toro approved attachments and accessories is available for use with the machine to enhance and expand its capabilities. Contact your Authorized Service Dealer or authorized Toro distributor or go to www.Toro.com for a list of all approved attachments and accessories.

To ensure optimum performance and continued safety certification of the machine, use only genuine Toro replacement parts and accessories. Replacement parts and accessories made by other manufacturers could be dangerous, and such use could void the product warranty.

Operation

Before Operation

Note: Determine the left and right sides of the machine from the normal operating position.

Before Operation Safety

General Safety

- Never allow children or untrained people to operate or service the machine. Local regulations may restrict the age or require certified training of the operator. The owner is responsible for training all operators and mechanics.
- Become familiar with the safe operation of the equipment, operator controls, and safety decals.
- Always engage the parking brake (if equipped), shut off the engine, remove the key, wait for all moving parts to stop, and allow the machine to cool before adjusting, servicing, cleaning, or storing the machine.
- Know how to stop the machine and shut off the engine quickly.
- Check that the operator's presence controls, safety switches, and shields are attached and functioning properly. Do not operate the machine unless they are functioning properly.
- Locate the pinch-point areas marked on the machine and attachments; keep your hands and feet away from these areas.
- Before operating the machine with an attachment, ensure that the attachment is properly installed and that it is a genuine Toro attachment. Read all the attachment manuals.
- Evaluate the terrain to determine what accessories and attachments you need to properly and safely perform the job.
- Have the property or work area marked for buried lines and other objects, and do not dig in marked areas; note the location of unmarked objects and structures, such as underground storage tanks, wells, and septic systems.
- Inspect the area where you will use the equipment and remove all debris.
- Ensure that the area is clear of bystanders before operating the machine. Stop the machine if anyone enters the area.

Fuel Safety

- Use extreme care when handling fuel. It is flammable and its vapors are explosive.
- Extinguish all cigarettes, cigars, pipes, and other sources of ignition.
- Use only an approved fuel container.
- Do not remove the fuel cap or fill the fuel tank while the engine is running or hot.
- Do not add or drain fuel in an enclosed space.
- Do not store the machine or fuel container where there is an open flame, spark, or pilot light, such as on a water heater or other appliance.
- If you spill fuel, do not attempt to start the engine; avoid creating any source of ignition until the fuel vapors have dissipated.
- Do not fill containers inside a vehicle or on a truck or trailer bed with a plastic liner. Always place containers on the ground, away from your vehicle before filling.
- Remove the equipment from the truck or trailer and refuel it while it is on the ground. If this is not possible, then refuel from a portable container rather than a fuel-dispenser nozzle.
- Keep the fuel-dispenser nozzle in contact with the rim of the fuel tank or container opening at all times until fueling is complete. Do not use a nozzle lock-open device.

Adding Fuel

Recommended Fuel

- For best results, use only clean, fresh (less than 30 days old), unleaded gasoline with an octane rating of 87 or higher ((R+M)/2 rating method).
- **Ethanol**: Gasoline with up to 10% ethanol (gasohol) or 15% MTBE (methyl tertiary butyl ether) by volume is acceptable. Ethanol and MTBE are not the same. Gasoline with 15% ethanol (E15) by volume is not approved for use. **Never use gasoline that contains more than 10% ethanol by volume**, such as E15 (contains 15% ethanol), E20 (contains 20% ethanol), or E85 (contains up to 85% ethanol). Using unapproved gasoline may cause performance problems and/or engine damage which may not be covered under warranty.
- **Do not** use gasoline containing methanol.
- **Do not** store fuel either in the fuel tank or fuel containers over the winter unless you use a fuel stabilizer.
- **Do not** add oil to gasoline.

Using Stabilizer/Conditioner

Use fuel stabilizer/conditioner in the machine to keep the fuel fresh longer when used as directed by the fuel-stabilizer manufacturer.

Important: **Do not use fuel additives containing methanol or ethanol.**

Add the amount of fuel stabilizer/conditioner to fresh fuel as directed by the fuel-stabilizer manufacturer.

Filling the Fuel Tank

1. Park the machine on a level surface, engage the parking brake (if equipped), and lower the boom.
2. Shut off the engine, remove the key, and allow the engine to cool.
3. Clean around the fuel-tank cap and remove it (Figure 14).

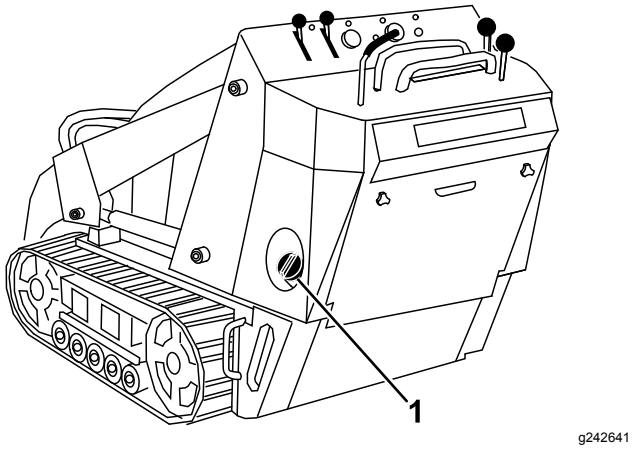

Figure 14

1. Fuel-tank cap

4. Add fuel to the tank until the level is 6 to 13 mm (1/4 to 1/2 inch) below the bottom of the filler neck.

   Important: **This space in the tank allows fuel to expand. Do not fill the fuel tank completely full.**

5. Install the fuel-tank cap securely, turning it until it clicks.
6. Wipe up any spilled fuel.

Performing Daily Maintenance

Before starting the machine each day, perform the Each Use/Daily procedures listed in the Maintenance (page 22).

Important: **Check the hydraulic-fluid level before starting the engine for the first time; refer to Checking the Hydraulic-Fluid Level (page 44).**

During Operation

During Operation Safety

General Safety

- Do not carry a load with the arms raised. Always carry loads close to the ground.
- Do not exceed the rated operating capacity, as the machine may become unstable, which may result in loss of control.
- Use only Toro-approved attachments and accessories. Attachments can change the stability and the operating characteristics of the machine.
- For machines with a platform:
  - Lower the loader arms before stepping off the platform.
  - Do not try to stabilize the machine by putting your foot on the ground. If you lose control of the machine, step off the platform and away from the machine.
  - Do not place your feet under the platform.
  - Do not move the machine unless you are standing with both feet on the platform and your hands are holding onto the reference bars.
- Use your full attention while operating the machine. Do not engage in any activity that causes distractions; otherwise, injury or property damage may occur.
- Look behind and down before backing up to ensure that the path is clear.
- Never jerk the controls; use a steady motion.
- The owner/user can prevent and is responsible for accidents that may cause personal injury or property damage.
- Wear appropriate clothing including gloves, eye protection, long pants, substantial slip-resistant footwear, and hearing protection. Tie back long hair and do not wear loose clothing or loose jewelry.
- Do not operate the machine when you are tired, ill, or under the influence of alcohol or drugs.

- Never carry passengers and keep pets and bystanders away from the machine.
- Operate the machine only in good light, keeping away from holes and hidden hazards.
- Ensure that all the drives are in neutral and engage the parking brake (if equipped) before starting the engine. Start the engine only from the operator's position.
- Use care when approaching blind corners, shrubs, trees, or other objects that may obscure vision.
- Slow down and use caution when making turns and crossing roads and sidewalks. Watch for traffic.
- Stop the attachment when you are not working.
- Stop the machine, shut off the engine, remove the key, and inspect the machine if you strike an object. Make any necessary repairs before resuming operation.
- Never run an engine in an enclosed area.
- Never leave a running machine unattended.
- Before leaving the operating position, do the following:
  - Park the machine on a level surface.
  - Lower the loader arms and disengage the auxiliary hydraulics.
  - Engage the parking brake (if equipped).
  - Shut off the engine and remove the key.
- Do not operate the machine when there is the risk of lightning.
- Operate the machine only in areas where there is sufficient clearance for you to safely maneuver. Be aware of obstacles in close proximity to you. Failure to maintain adequate distance from trees, walls, and other barriers may result in injury as the machine backs up during operation if you are not attentive to the surroundings.
- Check for overhead clearance (i.e., electrical wires, branches, and doorways) before driving under any objects and do not contact them.
- Do not overfill the attachment and always keep the load level when raising the loader arms. Items in the attachment could fall and cause injury.

Slope Safety

- **Operate the machine up and down slopes with the heavy end of the machine uphill.** Weight distribution changes with attachments. An empty bucket makes the rear of the machine the heavy end, and a full bucket makes the front of the machine the heavy end. Most other attachments make the front of machine the heavy end.
- Raising the loader arms on a slope affects the stability of the machine. Keep the loader arms in the lowered position when on slopes.
- Slopes are a major factor related to loss of control and tip-over accidents, which can result in severe injury or death. Operating the machine on any slope or uneven terrain requires extra caution.
- Establish your own procedures and rules for operating on slopes. These procedures must include surveying the site to determine which slopes are safe for machine operation. Always use common sense and good judgment when performing this survey.
- Slow down and use extra care on hillsides. Ground conditions can affect the stability of the machine.
- Avoid starting or stopping on a slope. If the machine loses traction, proceed slowly, straight down the slope.
- Avoid turning on slopes. If you must turn, turn slowly and keep the heavy end of the machine uphill.
- Keep all movements on slopes slow and gradual. Do not make sudden changes in speed or direction.
- If you feel uneasy operating the machine on a slope, do not do it.
- Watch for holes, ruts, or bumps, as uneven terrain could overturn the machine. Tall grass can hide obstacles.
- Use caution when operating on wet surfaces. Reduced traction could cause sliding.
- Evaluate the area to ensure that the ground is stable enough to support the machine.
- Use caution when operating the machine near the following:
  - Drop-offs
  - Ditches
  - Embankments
  - Bodies of water

  The machine could suddenly roll over if a track goes over the edge or the edge caves in. Maintain a safe distance between the machine and any hazard.
- Do not remove or add attachments on a slope.
- Do not park the machine on a hillside or slope.

Starting the Engine

1. Stand on the platform (if equipped on your machine).
2. Ensure that the auxiliary hydraulics lever is in the NEUTRAL position.
3. Move the choke lever fully forward if you are starting a cold engine.

   Note: A warm or hot engine may not require choking.
4. Move the throttle lever midway between the SLOW and FAST positions.
5. Insert the key into the key switch and turn it to the START position. When the engines starts, release the key.

   Important: **Do not engage the starter for more than 10 seconds at a time. If the engine fails to start, wait 30 seconds for the starter to cool down between attempts. Failure to follow these instructions could burn out the starter motor.**
6. After the engine starts, gradually move the choke lever back to the OFF position. If the engine stalls or hesitates, move the choke forward again until the engine warms up.
7. Move the throttle lever to the desired setting.

   Important: **Running the engine at high speeds when the hydraulic system is cold (i.e., when the air temperature is at or below freezing) could damage the hydraulic system. When starting the engine in cold conditions, allow it to run in the middle throttle position for 2 to 5 minutes before moving the throttle to the FAST position.**

   Note: If the outdoor temperature is below freezing, store the machine in a garage to keep it warmer and to aid in starting.

Driving the Machine

Use the traction control to move the machine. The farther you move the traction control in any direction, the faster the machine moves in that direction. Release the traction control to stop the machine.

The throttle control regulates the engine speed as measured in rpm (revolutions per minute). Place the throttle lever in the FAST position for best performance. You can, however, use the throttle position to operate at slower speeds.

Shutting Off the Engine

1. Park the machine on a level surface, engage the parking brake (if equipped), and lower the loader arms.
2. Ensure that the auxiliary hydraulics lever is in the NEUTRAL position.
3. Move the throttle lever 3/4 of the way to the FAST position.

   Note: If you set the throttle lower than halfway to the FAST position, the engine may continue to run for 1 second after turning the key to the OFF position, preventing a loud after-fire bang.
4. If the engine has been working hard or is hot, let it idle for a minute before turning the key switch to the OFF position.

   Note: This helps to cool the engine before you shut it off. In an emergency, you can shut off the engine immediately.
5. Turn the key switch to the OFF position and remove the key.

⚠ CAUTION

Children or bystanders may be injured if they move or attempt to operate the machine while it is unattended.

Always remove the key and engage the parking brake when leaving the machine unattended.

Using Attachments

Installing an Attachment

Important: **Use only Toro-approved attachments. Attachments can change the stability and the operating characteristics of the machine. The warranty of the machine may be voided if you use the machine with unapproved attachments.**

Important: **Before installing the attachment, ensure that the mount plates are free of any dirt or debris and that the pins rotate freely. If the pins do not rotate freely, grease them.**

1. Position the attachment on a level surface with enough space behind it to accommodate the machine.
2. Start the engine.
3. Tilt the attachment mount plate forward.
4. Position the mount plate into the upper lip of the attachment receiver plate (Figure 15).

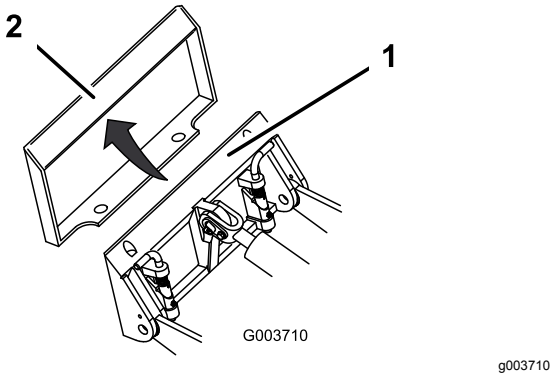

Figure 15

1. Mount plate
2. Receiver plate

5. Raise the loader arms while tilting back the mount plate at the same time.

   Important: **Raise the attachment enough to clear the ground and tilt the mount plate all the way back.**

6. Shut off the engine and remove the key.
7. Engage the quick-attach pins, ensuring that they are fully seated in the mount plate (Figure 16).

   Important: **If the pins do not rotate to the engaged position, the mount plate is not fully aligned with the holes in the attachment receiver plate. Check the receiver plate and clean it if necessary.**

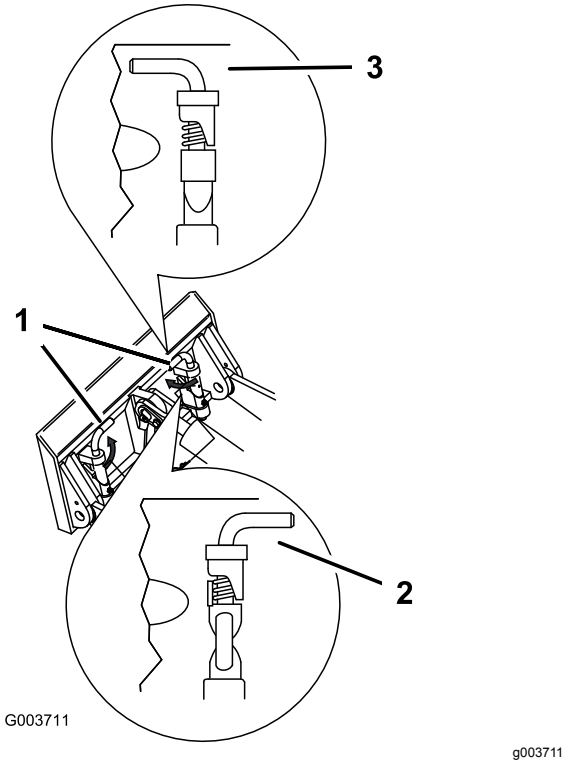

Figure 16

1. Quick-attach pins (engaged position)
2. Disengaged position
3. Engaged position

⚠ WARNING

If you do not fully seat the quick-attach pins through the attachment mount plate, the attachment could fall off the machine, crushing you or bystanders.

Ensure that the quick-attach pins are fully seated in the attachment mount plate.

Connecting the Hydraulic Hoses

⚠ WARNING

Hydraulic fluid escaping under pressure can penetrate skin and cause injury. Fluid injected into the skin must be surgically removed within a few hours by a doctor familiar with this form of injury; otherwise, gangrene may result.

- **Ensure that all hydraulic-fluid hoses and lines are in good condition and all hydraulic connections and fittings are tight before applying pressure to the hydraulic system.**
- **Keep your body and hands away from pinhole leaks or nozzles that eject high-pressure hydraulic fluid.**
- **Use cardboard or paper to find hydraulic leaks; never use your hands.**

⚠ CAUTION

Hydraulic couplers, hydraulic lines/valves, and hydraulic fluid may be hot. If you contact hot components, you may be burned.

- **Wear gloves when operating the hydraulic couplers.**
- **Allow the machine to cool before touching hydraulic components.**
- **Do not touch hydraulic fluid spills.**

If the attachment requires hydraulics for operation, connect the hydraulic hoses as follows:

1. Shut off the engine and remove the key.
2. Move the auxiliary-hydraulics lever forward, backward, and back to the NEUTRAL position to relieve pressure at the hydraulic couplers.
3. Remove the protective covers from the hydraulic connectors on the machine.
4. Ensure that all foreign matter is cleaned from the hydraulic connectors.
5. Push the attachment male connector into the female connector on the machine.

   Note: When you connect the attachment male connector first, you relieve any pressure built up in the attachment.
6. Push the attachment female connector onto the male connector on the machine.
7. Confirm that the connection is secure by pulling on the hoses.

Removing an Attachment

1. Park the machine on a level surface.
2. Lower the attachment to the ground.
3. Shut off the engine and remove the key.
4. Disengage the quick-attach pins by turning them to the outside.
5. If the attachment uses hydraulics, move the auxiliary-hydraulics lever forward, backward, and back to the NEUTRAL position to relieve pressure at the hydraulic couplers.
6. If the attachment uses hydraulics, slide the collars back on the hydraulic couplers and disconnect them.

   Important: **Connect the attachment hoses together to prevent hydraulic system contamination during storage.**
7. Install the protective covers onto the hydraulic couplers on the machine.
8. Start the engine, tilt the mount plate forward, and back the machine away from the attachment.

After Operation

After Operation Safety

General Safety

- Shut off the engine, remove the key, wait for all movement to stop, and allow the machine to cool before adjusting, cleaning, storing, or servicing it.
- Clean debris from the attachments, drives, mufflers, and engine to help prevent fires. Clean up oil or fuel spills.
- Keep all parts in good working condition and all hardware tightened.
- Do not touch parts that may be hot from operation. Allow them to cool before attempting to maintain, adjust, or service the machine.
- Use care when loading or unloading the machine into a trailer or truck.

Moving a Non-Functioning Machine

Important: **Do not tow or pull the machine without first opening the tow valves, or you will damage the hydraulic system.**

1. Shut off the engine and remove the key.
2. Open the rear-access cover.

3. Using a wrench, turn the tow valves on the hydraulic pumps twice counter-clockwise (Figure 17).

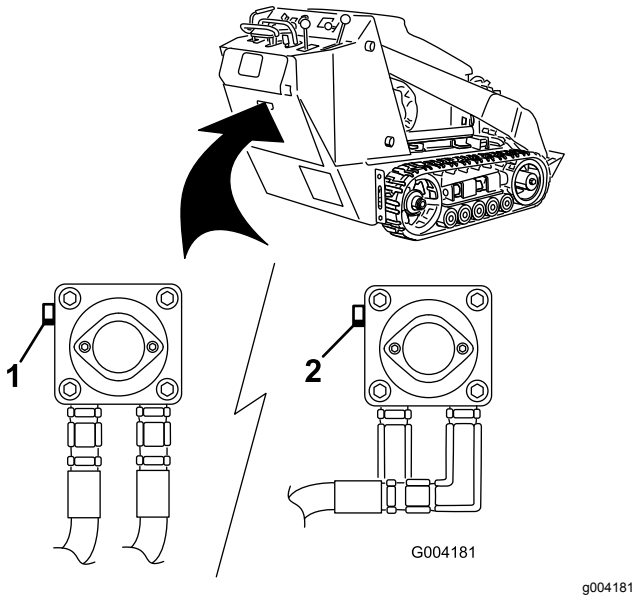

Figure 17

1. Left tow valve (right track)
2. Right tow valve (left track)

4. Tow the machine as required.
5. After repairing the machine, close the tow valves before operating it.

Hauling the Machine

Use a heavy-duty trailer or truck to haul the machine. Use a full-width ramp. Ensure that the trailer or truck has all the necessary brakes, lighting, and marking as required by law. Please carefully read all the safety instructions. Knowing this information could help you or bystanders avoid injury. Refer to your local ordinances for trailer and tie-down requirements.

⚠ WARNING

Driving on the street or roadway without turn signals, lights, reflective markings, or a slow-moving-vehicle emblem is dangerous and can lead to accidents causing personal injury.

Do not drive the machine on a public street or roadway.

Selecting a Trailer

⚠ WARNING

Loading a machine onto a trailer or truck increases the possibility of tip-over and could cause serious injury or death (Figure 18).

- **Use only full-width ramps.**
- **Ensure that the length of ramp is at least 4 times as long as the height of the trailer or truck bed to the ground. This ensures that ramp angle does not exceed 15 degrees on flat ground.**

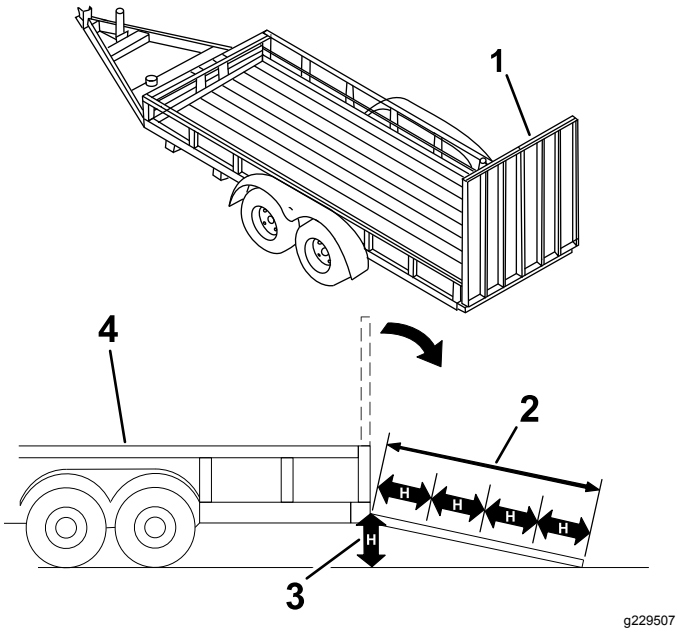

Figure 18

1. Full-width ramp(s) in stowed position
2. Ramp is at least 4 times as long as the height of the trailer or truck bed to the ground
3. H=height of the trailer or truck bed to the ground
4. Trailer

Loading the Machine

⚠ WARNING

Loading a machine onto a trailer or truck increases the possibility of tip-over and could cause serious injury or death.

- **Use extreme caution when operating a machine on a ramp.**
- **Load and unload the machine with the heavy end up the ramp.**
- **Avoid sudden acceleration or deceleration while driving the machine on a ramp as this could cause a loss of control or a tip-over situation.**

1. If using a trailer, connect it to the towing vehicle and connect the safety chains.
2. If applicable, connect the trailer brakes.
3. Lower the ramp(s).
4. Lower the loader arms.
5. Load the machine onto the trailer with the heavy end up the ramp, carrying loads low (Figure 19).
   - If the machine has a **full** load-bearing attachment (e.g., bucket) or a non-load-bearing attachment (e.g., trencher), drive the machine forward up the ramp.
   - If the machine has an **empty** load-bearing attachment or no attachment, back the machine up the ramp.

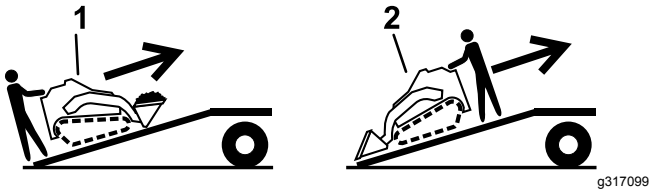

Figure 19

1. Machine with full attachment or non-load-bearing attachment—drive the machine forward up the ramp(s).
2. Machine with empty or no attachment—back the machine up the ramp(s).

6. Lower the loader arms all the way down.
7. Engage the parking brake (if equipped), shut off the engine, and remove the key.
8. Use the metal tie-down loops on the machine to securely fasten the machine to the trailer or truck with straps, chains, cable, or ropes (Figure 20). Refer to local regulations for tie-down requirements.

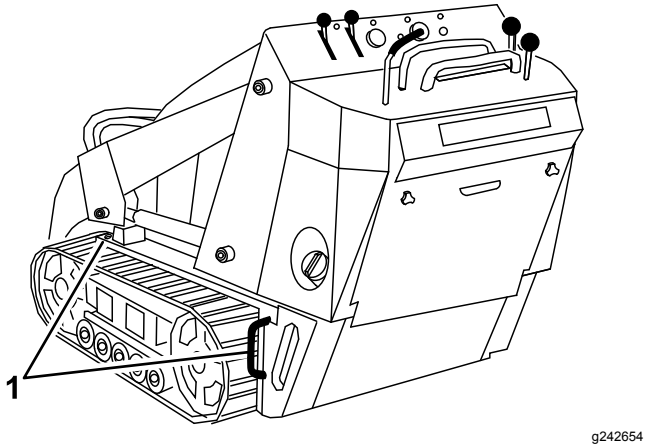

Figure 20

1. Tie-down loops

Unloading the Machine

1. Lower the ramp(s).
2. Unload the machine from the trailer with the heavy end up the ramp, carrying loads low (Figure 21).
   - If the machine has a **full** load-bearing attachment (e.g., bucket) or a non-load-bearing attachment (e.g., trencher), back it down the ramp.
   - If the machine has an **empty** load-bearing attachment or no attachment, drive it forward down the ramp.

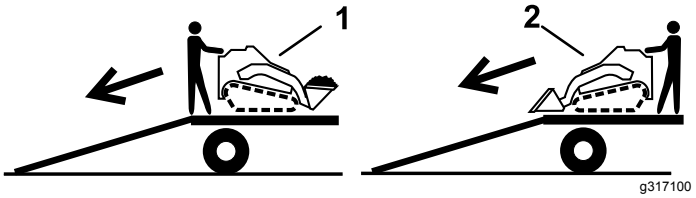

Figure 21

1. Machine with full attachment or non-load-bearing attachment—back the machine down the ramp(s).
2. Machine with empty or no attachment—drive the machine forward down the ramp(s).

Lifting the Machine

You can lift the machine using the tie-down/lift loops as lift points; refer to Figure 20.

Maintenance

Note: Determine the left and right sides of the machine from the normal operating position.

Important: **If you must tilt the machine more than 25°, clamp off the vent hose on the top of the fuel tank(s) to prevent fuel from fouling the carbon canister.**

Maintenance Safety

⚠ CAUTION

If you leave the key in the switch, someone could accidently start the engine and seriously injure you or other bystanders.

Remove the key from the switch before you perform any maintenance.

- Park the machine on a level surface, disengage the auxiliary hydraulics, lower the attachment, engage the parking brake (if equipped), shut off the engine, and remove the key. Wait for all movement to stop and allow the machine to cool before adjusting, cleaning, storing, or repairing it.
- Clean up oil or fuel spills.
- Do not allow untrained personnel to service the machine.
- Use jack stands to support the components when required.
- Carefully release pressure from components with stored energy; refer to Relieving Hydraulic Pressure (page 43).
- Disconnect the battery before making any repairs; refer to Servicing the Battery (page 33).
- Keep your hands and feet away from the moving parts. If possible, do not make adjustments with the engine running.
- Keep all parts in good working condition and all hardware tightened. Replace all worn or damaged decals.
- Do not tamper with the safety devices.
- Use only Toro-approved attachments. Attachments can change the stability and the operating characteristics of the machine. You may void the warranty if you use the machine with unapproved attachments.
- Use only genuine Toro replacement parts.
- If any maintenance or repair requires the loader arms to be in the raised position, secure the arms in the raised position with the hydraulic-cylinder lock(s).

Recommended Maintenance Schedule(s)

Maintenance Service Interval	Maintenance Procedure
After the first 8 hours	• Replace the hydraulic filter.
After the first 50 hours	• Change the engine oil and filter. • Check and adjust the track tension.
Before each use or daily	• Grease the machine. (Grease immediately after every washing.) • Check the air-filter-service indicator. • Check the engine-oil level. • Clean the tracks. • Check the tracks for excessive wear (If the tracks are worn, replace them). • Test the parking brake. • Remove debris from the machine. • Check for loose fasteners.
Every 25 hours	• Remove the air-cleaner cover, clean out debris, and check the air-filter-service indicator. • Inspect the drive belt for wear or damage. • Check the hydraulic-fluid level.

Maintenance Service Interval	Maintenance Procedure
Every 100 hours	• Change the engine oil. (Service more frequently if conditions are extremely dusty or sandy.) • Check and adjust the track tension. • Check the hydraulic lines for leaks, loose fittings, kinked lines, loose mounting supports, wear, weather, and chemical deterioration. • Check for dirt buildup in the chassis.
Every 200 hours	• Replace the carbon-canister air filter (Service more frequently if conditions are extremely dusty or sandy). • Replace the carbon-canister purge-line filter (Service more frequently when using the vibratory-plow attachment). • Change the oil filter. (Service more frequently if conditions are extremely dusty or sandy.) • Check the spark plug(s). • Change the fuel filter. • Replace the drive belt. • Replace the hydraulic filter.
Every 250 hours	• Check and grease the road wheels.
Every 400 hours	• Change the hydraulic fluid.
Every 500 hours	• Replace the spark plug.
Every 1,500 hours	• Replace all moving hydraulic hoses.
Yearly or before storage	• Check and adjust the track tension. • Touch up chipped paint.

Important: **Refer to your engine owner's manual for additional maintenance procedures.**

Note: After 50 hours and then every 100 hours thereafter (150, 250, 350, etc.), the hour meter displays CHG OIL to remind you to change the engine oil. After every 100 hours, the screen displays SVC to remind you to perform the other maintenance procedures based on a 100-, 200-, or 400-hour schedule. These reminders come on starting 3 hours prior to the service interval time and flash at regular intervals for 6 hours.

Pre-Maintenance Procedures

Using the Cylinder Lock

⚠ WARNING

The loader arms may lower when in the raised position, crushing anyone under them.

Install the cylinder lock(s) before performing maintenance that requires raised loader arms.

Installing the Cylinder Lock

1. Remove the attachment.
2. Raise the loader arms to the fully raised position.
3. Shut off the engine and remove the key.
4. Remove the lynch pin securing the cylinder lock to the loader arm (Figure 22).

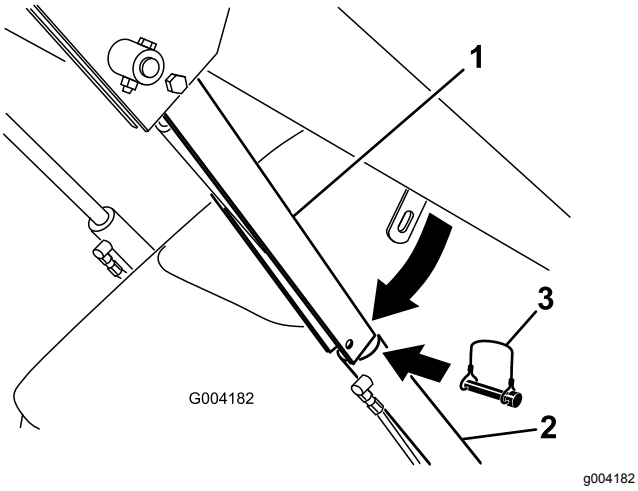

Figure 22

1. Cylinder lock
2. Lift cylinder
3. Lynch pin

5. Lower the cylinder lock over the cylinder rod and secure it with the lynch pin (Figure 22).
6. **Slowly** lower the loader arms until the cylinder lock contacts the cylinder body and rod end.

Removing and Storing the Cylinder Lock

Important: **Remove the cylinder lock from the rod and fully secure it in the storage position before operating the machine.**

1. Start the engine.
2. Raise the loader arms to the fully raised position.
3. Shut off the engine and remove the key.
4. Remove the lynch pin securing the cylinder lock.
5. Rotate the cylinder lock up to the loader arm and secure it with the lynch pin.
6. Lower the loader arms.

Accessing Internal Components

⚠ WARNING

Opening or removing covers, hoods, and screens while the engine is running could allow you to contact moving parts, seriously injuring you.

Before opening any of the covers, hoods, and screens, shut off the engine, remove the key from the key switch, and allow the engine to cool.

Opening the Hood

1. Loosen the hood-locking screw (Figure 23)

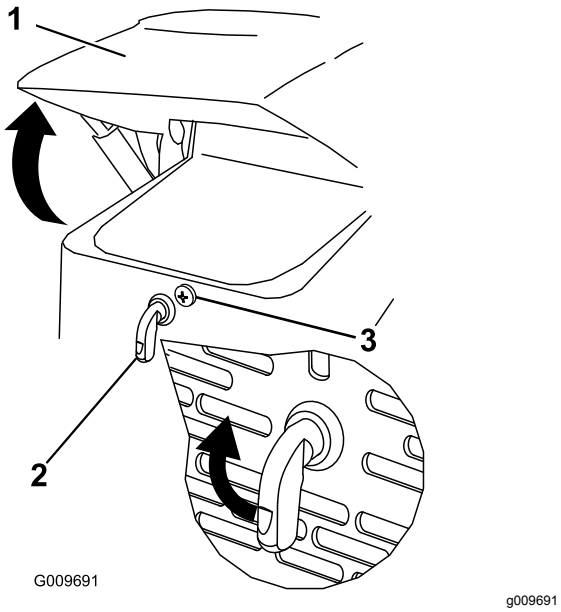

Figure 23

1. Hood
2. Hood-latch lever
3. Hood-locking screw

2. Turn the hood latch clockwise (Figure 23).
3. Swing the hood up (Figure 23).
4. Swing the prop rod up and secure it in the bracket on the hood (Figure 24).

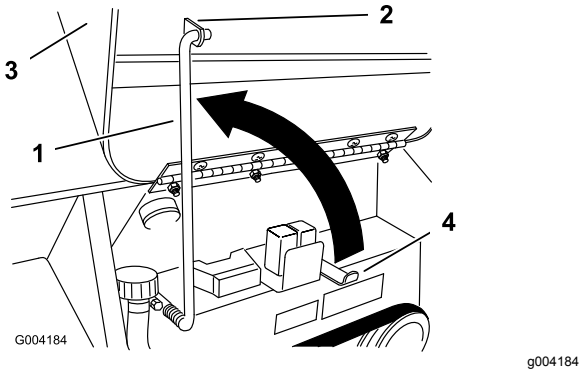

Figure 24

1. Prop rod
2. Bracket
3. Hood
4. Prop-rod holder

Closing the Hood

1. Pull the prop rod out of the bracket on the hood and lower it into its holder.
2. Lower the hood and secure it by pushing down on the front of the hood until it locks in place.
3. Tighten the hood-locking screw to secure the latch (Figure 23).

Opening the Rear-Access Cover

1. Unscrew the 2 hand knobs securing the rear-access cover to the machine (Figure 25).

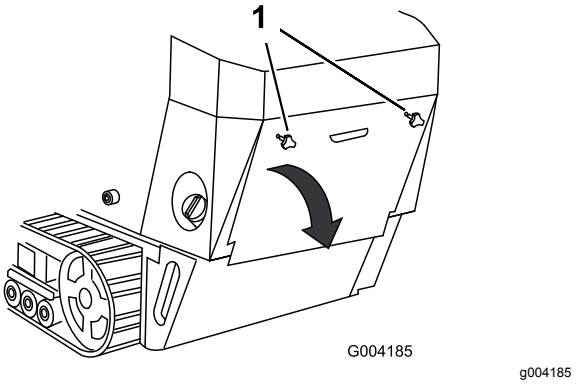

Figure 25

1. Hand knobs

2. Tilt the rear-access cover down and remove it to access the internal components (Figure 25).

Closing the Rear-Access Cover

1. Move the rear-access cover in place over the back of the machine; ensure that the tabs line up in the slots.
2. Push the access cover forward, lining up the hand-knob screws with the threaded holes in the machine.
3. Screw the hand knobs tight to secure the rear-access cover in place.

Removing the Side Screens

1. Open the hood.
2. Slide the side screens (Figure 26) up and out of the slots in the front screen and frame.

Figure 26

1. Side screen

Installing the Side Screens

Slide the side screens into place in the front screen and frame.

Removing the Front Screen

⚠ CAUTION

If the engine has been running, the heat shield will be very hot and could burn you.

Allow the machine to cool completely before touching the heat shield.

1. Open the hood and remove both side screens.
2. Loosen the bolts securing the weights (Figure 27).

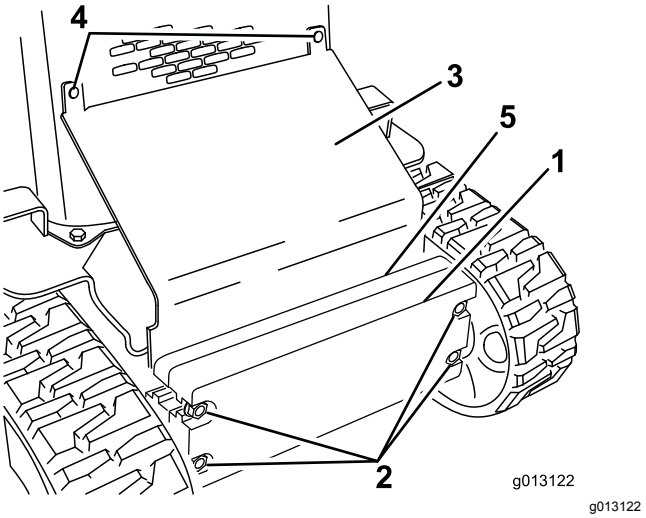

Figure 27

1. Front weight
2. Bolts
3. Sloped plate
4. Carriage bolts
5. Rear weight

3. Remove the carriage bolts and nuts securing the sloped plate (Figure 27).
4. Lift the sloped plate up and off the machine.
5. Remove the 4 bolts securing the front screen to the frame (Figure 28).

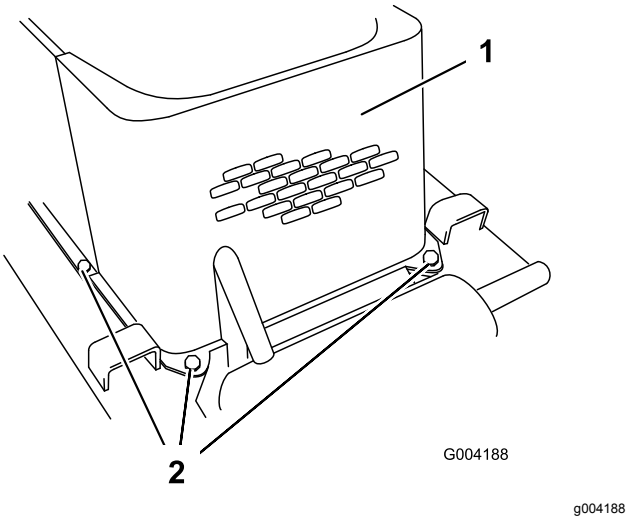

Figure 28

1. Front screen
2. Bolts (left side bolt not shown)

6. Remove the shoulder bolts and nuts securing the oil cooler to the top of the front screen (Figure 29).

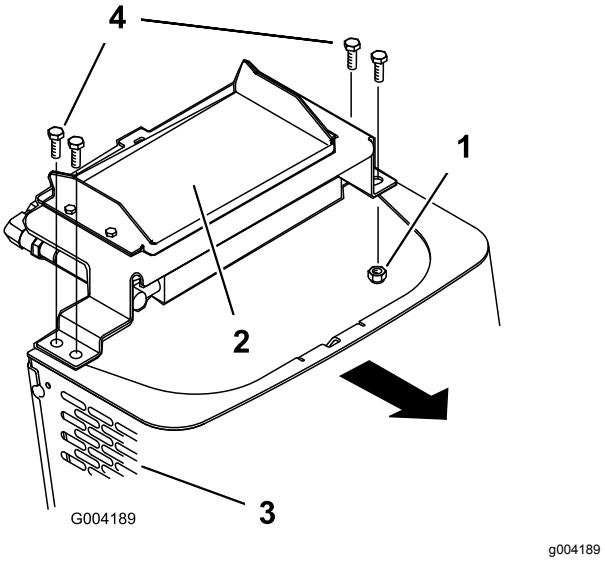

Figure 29

1. Nut
2. Oil cooler
3. Front screen
4. Shoulder bolts

7. Remove the front screen.
8. When finished, install the front screen with the 4 bolts removed previously.
9. Install the oil cooler to the front screen with the 4 shoulder bolts and nuts removed previously.
10. Slide the sloped plate between the frame and the weights; secure it to the front screen grill using the carriage bolts and nuts removed previously (Figure 27).

11. Tighten the bolts securing the front weights (Figure 27).
12. Install the side screens and close the hood.

Lubrication

Greasing the Machine

Service Interval: Before each use or daily (Grease immediately after every washing.)

Grease Type: General-purpose grease

1. Park the machine on a level surface, engage the parking brake (if equipped), and lower the loader arms.
2. Shut off the engine and remove the key.
3. Clean the grease fittings with a rag.
4. Connect a grease gun to each fitting (Figure 30 and Figure 31).

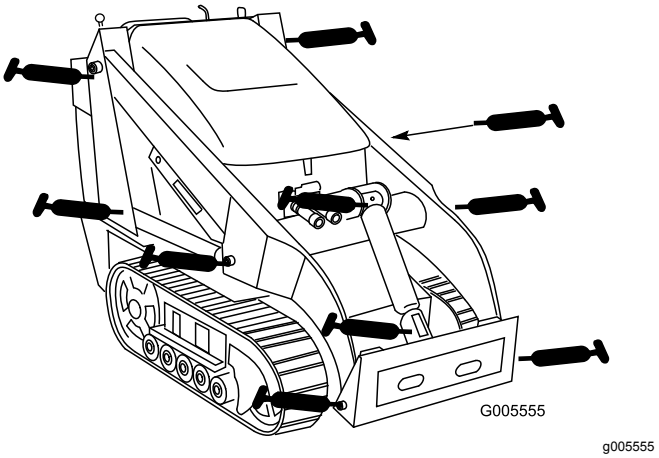

Figure 30

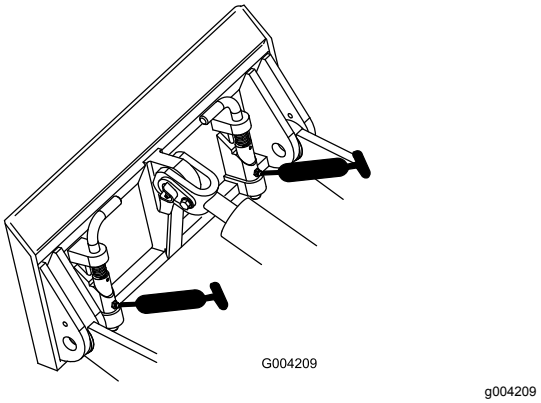

Figure 31

5. Pump grease into the fittings until grease begins to ooze out of the bearings (approximately 3 pumps).
6. Wipe up any excess grease.

Engine Maintenance

Engine Safety

- Shut off the engine before checking the oil or adding oil to the crankcase.
- Do not change the engine governor setting or overspeed the engine.
- Keep your hands, feet, face, clothing, and other body parts away from the muffler and other hot surfaces.

Servicing the Air Cleaner

Service Interval: Before each use or daily—Check the air-filter-service indicator.

Every 25 hours—Remove the air-cleaner cover, clean out debris, and check the air-filter-service indicator.

Servicing the Air-Cleaner Cover and Body

Important: **Replace the air-cleaner filter only when the service indicator shows red (Figure 32). Changing the air filter before it is necessary only increases the chance of dirt entering the engine when you remove the filter.**

1. Park the machine on a level surface, engage the parking brake (if equipped), and lower the loader arms.
2. Shut off the engine and remove the key.
3. Open the hood and secure the prop rod (if applicable).
4. Check the air-cleaner body for damage that could cause an air leak. Check the whole intake system for leaks, damage, or loose hose clamps.

   Replace or repair any damaged components.
5. Release the latches on the air cleaner and pull the air-cleaner cover off the air-cleaner body (Figure 32).

   Important: **Do not remove the air filter.**

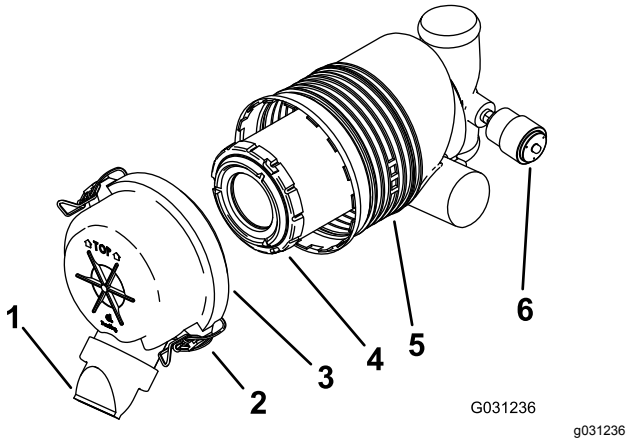

Figure 32

1.	Dust cap	4.	Primary filter
2.	Latch	5.	Air-filter body
3.	Air-cleaner cover	6.	Service indicator

6. Squeeze the dust cap sides to open it and knock the dust out.
7. Clean the inside of the air-cleaner cover with compressed air that is under 205 kPa (30 psi).

   Important: **Do not use compressed air on the air-cleaner body.**
8. Check the service indicator.
   - If the service indicator is clear, install the air-cleaner cover with the dust cap oriented downward and secure the latches (Figure 32).
   - If the service indicator is red, replace the air filter as described in Replacing the Filter (page 28).

Replacing the Filter

Important: **To prevent engine damage, always operate the engine with the air filter and cover installed.**

1. Gently slide the filter out of the air-cleaner body (Figure 32).

   Note: Avoid knocking the filter into the side of the body.

   Important: **Do not attempt to clean the filter.**
2. Inspect the new filter for tears, an oily film, or damage to the rubber seal. Look into the filter while shining a bright light on the outside of the filter; holes in the filter appear as bright spots.

   If the filter is damaged, do not use it.
3. Carefully install the filter (Figure 32).

   Note: Ensure that the filter is fully seated by pushing on the outer rim of the filter while installing it.

Important: **Do not press on the soft inside area of the filter.**

4. Install the air-cleaner cover with the dust cap oriented downward and secure the latches (Figure 32).
5. Close the hood.

Servicing the Carbon Canister

Replacing the Carbon-Canister Air Filter

Service Interval: Every 200 hours—Replace the carbon-canister air filter (Service more frequently if conditions are extremely dusty or sandy).

1. Park the machine on a level surface, engage the parking brake, and lower the loader arms.
2. Shut off the engine and remove the key.
3. Remove the rear-access cover.
4. Remove and discard the carbon-canister air filter (Figure 33).

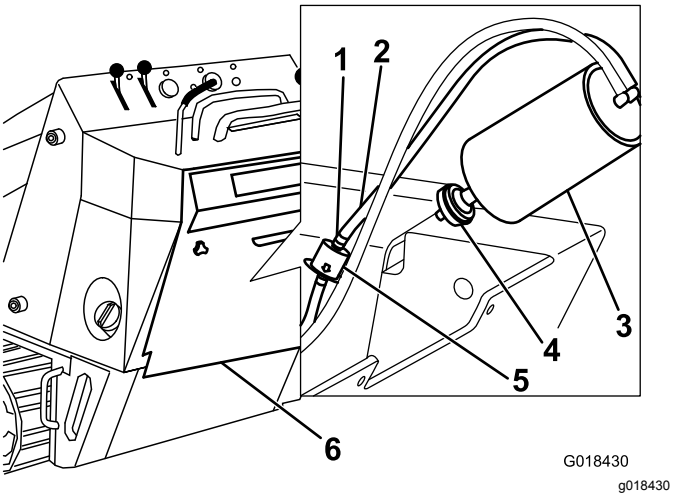

Figure 33

1. Hose clamp
2. Hose to carbon canister
3. Carbon canister
4. Air filter
5. Purge-line filter
6. Rear access door

5. Install a new filter onto the carbon canister (Figure 33).
6. Install the rear-access cover.

Replacing the Carbon-Canister Purge-Line Filter

Service Interval: Every 200 hours—Replace the carbon-canister purge-line filter (Service more frequently when using the vibratory-plow attachment).

Note: Check the purge-line filter occasionally for dirt. If the filter looks dirty, replace it.

1. Park the machine on a level surface, engage the parking brake, and lower the loader arms.
2. Shut off the engine and remove the key.
3. Remove the rear-access cover.
4. Move the spring-type hose clamps on both sides of the carbon-canister purge-line filter away from the filter (Figure 33).
5. Remove and discard the purge-line filter (Figure 33).
6. Install a new filter into the hose with the arrow on the filter pointing away from the carbon canister and secure it with the hose clamps (Figure 33).
7. Install the rear-access cover.

Servicing the Engine Oil

Service Interval: Before each use or daily—Check the engine-oil level.

After the first 50 hours—Change the engine oil and filter.

Every 100 hours—Change the engine oil. (Service more frequently if conditions are extremely dusty or sandy.)

Every 200 hours—Change the oil filter. (Service more frequently if conditions are extremely dusty or sandy.)

Engine-Oil Specifications

Oil Type: Detergent oil (API service SG, SH, SJ, or higher)

Crankcase Capacity: with filter, 2.0 L (2.1 US qt)

Viscosity: See table below

USE THESE SAE VISCOSITY OILS

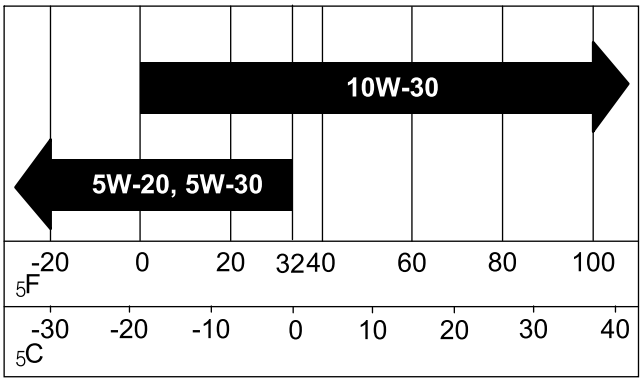

G000650
g000650

Figure 34

Checking the Engine-Oil Level

1. Park the machine on a level surface, engage the parking brake, and lower the loader arms.
2. Shut off the engine, remove the key, and allow the engine to cool.
3. Open the hood.
4. Clean the area around the oil dipstick (Figure 35).

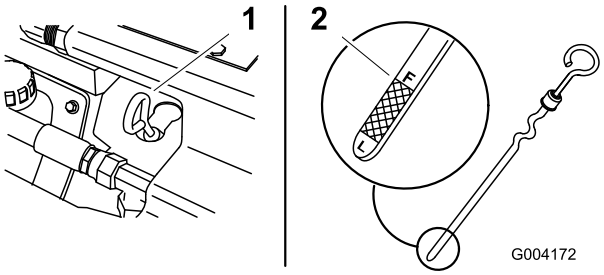

G004172
g004172

Figure 35

1. Oil dipstick
2. Metal end

5. Pull out the dipstick and wipe the metal end clean (Figure 35).
6. Slide the dipstick fully into the dipstick tube (Figure 35).
7. Pull the dipstick out and look at the metal end.
8. If the oil level is low, clean around the oil-fill cap and remove the cap (Figure 36).

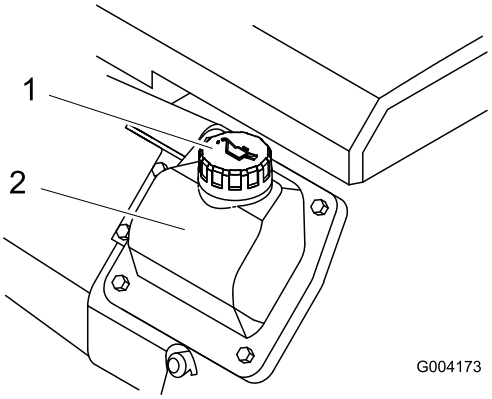

G004173
g004173

Figure 36

1. Fill cap
2. Valve cover

9. Slowly pour only enough oil into the valve cover to raise the level to the F (Full) mark.

   Important: **Do not overfill the crankcase with oil to prevent damaging the engine.**
10. Replace the fill cap and dipstick.
11. Close the hood.

Changing the Engine Oil

1. Start the engine and let it run for 5 minutes.

   Note: This warms the oil so that it drains better.
2. Park the machine so that the drain side is slightly lower than the opposite side to ensure that the oil drains completely.
3. Lower the loader arms, engage the parking brake, shut off the engine, and remove the key.
4. Remove the drain plug (Figure 37).

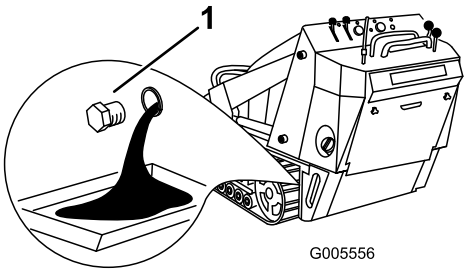

G005556
g005556

Figure 37

1. Oil drain valve

5. When the oil has drained completely, replace the plug.

   Note: Dispose of the used oil at a certified recycling center.
6. Remove the fill cap (Figure 36) and slowly pour approximately 80% of the specified amount of oil in through the valve cover.

7. Check the oil level.
8. Slowly add additional oil to bring the level to the F (Full) mark on the dipstick.
9. Replace the fill cap.

Changing the Oil Filter

1. Drain the oil from the engine; refer to Changing the Engine Oil (page 30).
2. When the oil has drained completely, replace the plug.

   Note: Dispose of the used oil at a certified recycling center.
3. Place a shallow pan or rag under the filter to catch oil.
4. Remove the old filter (Figure 38) and wipe the surface of the filter adapter gasket.

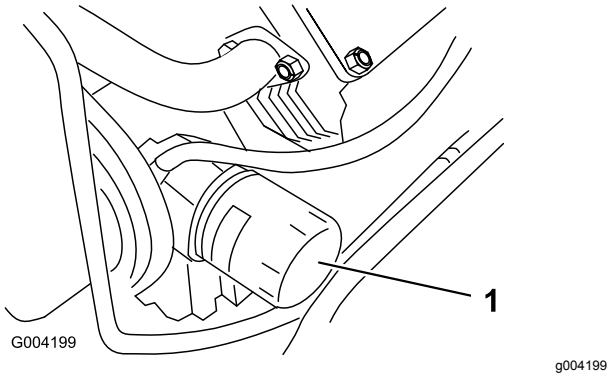

Figure 38

1. Oil filter

5. Pour new oil of the proper type through the center hole of the filter. Stop pouring when the oil reaches the bottom of the threads.
6. Allow 1 to 2 minutes for the oil to be absorbed by filter material, then pour off the excess oil.
7. Apply a thin coat of new oil to the rubber gasket on the replacement filter.
8. Install the replacement oil filter to the filter adapter. Turn the oil filter clockwise until the rubber gasket contacts the filter adapter, then tighten the filter an additional 1/2 turn.
9. Remove the fill cap (Figure 36) and slowly pour approximately 80% of the specified amount of oil in through the valve cover.
10. Check the oil level.
11. Slowly add additional oil to bring the level to the F (Full) mark on the dipstick.
12. Replace the fill cap.

Servicing the Spark Plug(s)

Service Interval: Every 200 hours—Check the spark plug(s).

Every 500 hours—Replace the spark plug.

Ensure that the air gap between the center and side electrodes is correct before installing each spark plug. Use a spark-plug wrench for removing and installing each spark plug and a gapping tool/feeler gauge to check and adjust the air gap. Install new spark plugs if necessary.

Type: Champion XC12YC or equivalent.

Air Gap: 0.75 mm (0.03 inch)

Removing the Spark Plug

1. Park the machine on a level surface, engage the parking brake (if equipped), and lower the loader arms.
2. Shut off the engine, remove the key, and allow the engine to cool.
3. Clean the area around the base of the plug(s) to keep dirt and debris out of the engine.
4. Remove the spark plug(s) as shown in Figure 39.

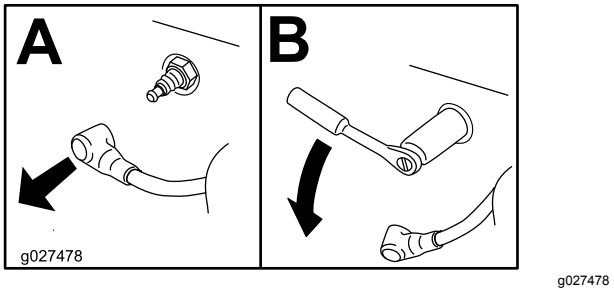

Figure 39

Checking the Spark Plug

Important: **Do not clean the spark plug(s). Always replace the spark plug(s) when it has a black coating, worn electrodes, an oily film, or cracks.**

If you see light brown or gray on the insulator, the engine is operating properly. A black coating on the insulator usually means the air cleaner is dirty.

Set the gap to 0.75 mm (0.03 inch).

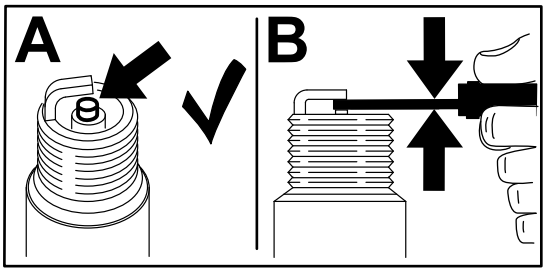

g206628

Figure 40

Installing the Spark Plug

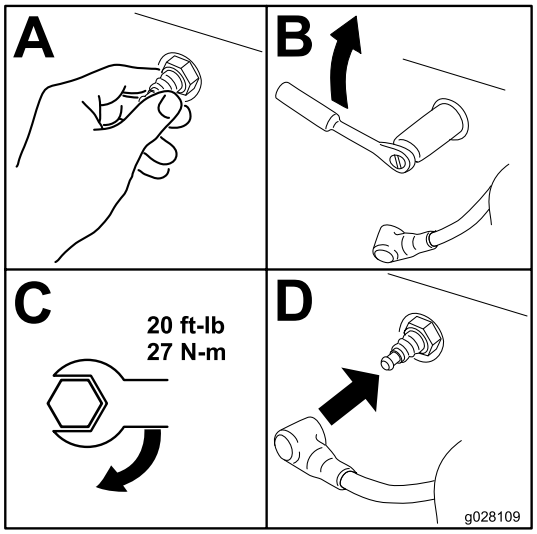

g028109

Figure 41

Fuel System Maintenance

⚠ DANGER

In certain conditions, fuel is extremely flammable and highly explosive. A fire or explosion from fuel can burn you and others and can damage property.

- **Drain fuel from the fuel tanks when the engine is cold. Do this outdoors in an open area. Wipe up any fuel that spills.**
- **Never smoke when draining fuel, and stay away from an open flame or where a spark may ignite the fumes.**
- **Refer to Fuel Safety (page 14) for a complete list of fuel related precautions.**

Changing the Fuel Filter

Service Interval: Every 200 hours/Yearly (whichever comes first)

1. Park the machine on a level surface, engage the parking brake, and lower the loader arms.
2. Shut off the engine and remove the key.
3. Open the hood and remove the left side screen.
4. Loosen the tank cap to relieve pressure.
5. Clamp the fuel lines on both sides of the fuel filter (Figure 42).

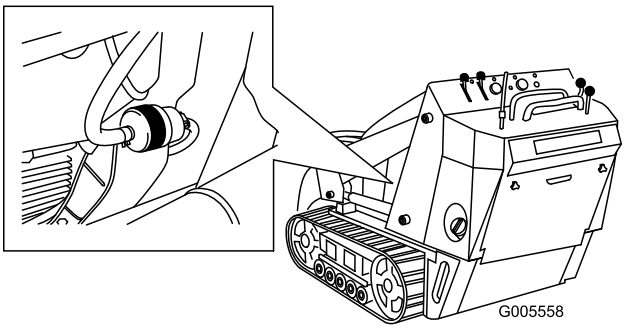

g005558

Figure 42

1. Filter
2. Hose clamp

6. Squeeze the ends of the hose clamps together and slide them away from the filter (Figure 42).
7. Place a drain pan under the fuel lines to catch any leaks, then remove the filter from the fuel lines.
8. Slide the fuel lines on the new fuel filter fittings, ensuring that the arrow on the filter points away from the fuel line coming from the fuel tank and toward the line going to the fuel pump.

Important: **Never install a dirty filter.**

9. Move the hose clamps close to the filter.
10. Remove the clamp blocking fuel flow and open the fuel valves.
11. Secure the tank cap.
12. Replace the side screen and close the hood.

Draining the Fuel Tank

1. Park the machine on a level surface, engage the parking brake, and lower the loader arms.
2. Shut off the engine and remove the key.
3. Syphon the fuel from the tank using a pump-type syphon.

Note: Now is the best time to install a new fuel filter because the fuel tank is empty.

Electrical System Maintenance

Electrical System Safety

- Disconnect the battery before repairing the machine. Disconnect the negative terminal first and the positive last. Connect the positive terminal first and the negative last.
- Charge the battery in an open, well-ventilated area, away from sparks and flames. Unplug the charger before connecting or disconnecting the battery. Wear protective clothing and use insulated tools.
- Battery acid is poisonous and can cause burns. Avoid contact with skin, eyes, and clothing. Protect your face, eyes, and clothing when working with a battery.
- Battery gases can explode. Keep cigarettes, sparks, and flames away from the battery.

Servicing the Battery

Always keep the battery clean and fully charged. Use a paper towel to clean the battery case. If the battery terminals are corroded, clean them with a solution of 4 parts water and 1 part baking soda. Apply a light coating of grease to the battery terminals to reduce corrosion.

Specifications: 12 V, 585 A (cold cranking)

Removing the Battery

⚠ WARNING

Battery terminals or metal tools could short against metal machine components, causing sparks. Sparks can cause the battery gasses to explode, resulting in personal injury.

- **When removing or installing the battery, do not allow the battery terminals to touch any metal parts of the machine.**
- **Do not allow metal tools to short between the battery terminals and metal parts of the machine.**

1. Park the machine on a level surface, engage the parking brake (if equipped), and lower the loader arms.
2. Shut off the engine and remove the key.
3. Open the hood.
4. Remove the wing nuts and bar securing the battery (Figure 43).

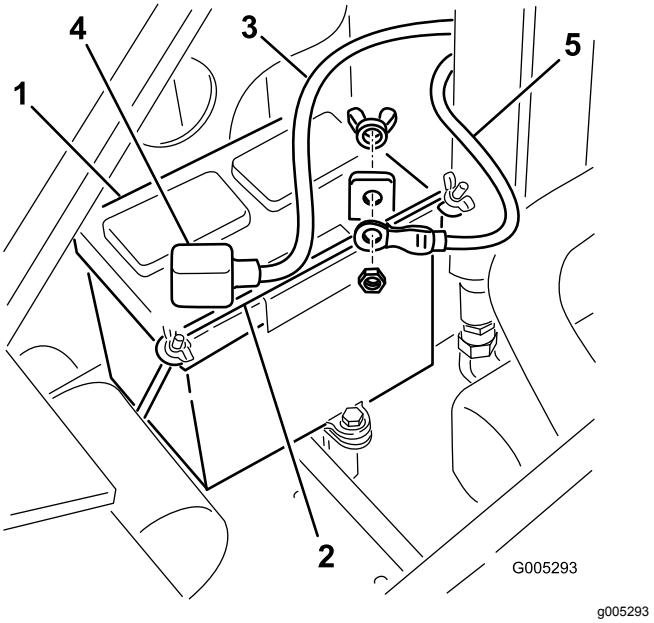

Figure 43

1. Battery
2. Bar
3. Positive cable
4. Rubber cover
5. Negative cable

5. Disconnect the negative (black) ground cable from the battery post (Figure 43). Retain the fasteners.
6. Slide the rubber cover off the positive (red) cable.
7. Disconnect the positive (red) cable from the battery post (Figure 43). Retain the fasteners.
8. Gently push the hydraulic hoses aside and lift the battery out of the chassis.

Charging the Battery

Important: **Always keep the battery fully charged (1.265 specific gravity). This is especially important to prevent battery damage when the temperature is below 0°C (32°F).**

1. Remove the battery from the machine; refer to Removing the Battery (page 33).
2. Charge the battery for 10 to 15 minutes at 25 to 30 A or 30 minutes at 4 to 6 A (Figure 44). Do not overcharge the battery.

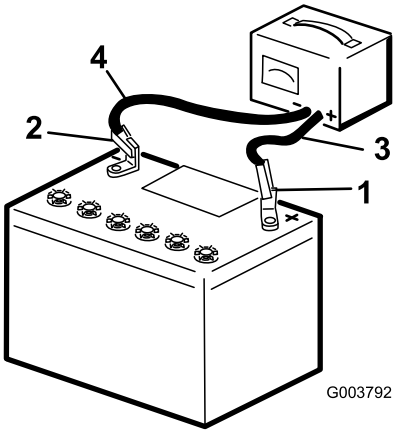

Figure 44

1. Positive battery post
2. Negative battery post
3. Red (+) charger lead
4. Black (-) charger lead

3. When the battery is fully charged, unplug the charger from the electrical outlet, then disconnect the charger leads from the battery posts (Figure 44).

Cleaning the Battery

Note: Keep the terminals and the entire battery case clean, because a dirty battery discharges slowly.

1. Park the machine on a level surface, engage the parking brake (if equipped), and lower the loader arms.
2. Shut off the engine and remove the key.
3. Remove the battery from the machine; Removing the Battery (page 33).
4. Wash the entire case with a solution of baking soda and water.
5. Rinse the battery with clear water.
6. Coat the battery posts and cable connectors with Grafo 112X (skin-over) grease (Toro Part No. 505-47) or petroleum jelly to prevent corrosion.
7. Install the battery; refer to Installing the Battery (page 35).

Installing the Battery

1. Using the fasteners previously removed, install the positive (red) battery cable to the positive (+) battery terminal (Figure 43).
2. Slide the red terminal boot onto the positive battery post.
3. Using the fasteners previously removed, install the negative (black) battery cable to the negative (-) battery terminal (Figure 43).
4. Secure the battery using the bar and wing nuts (Figure 43).

Important: **Ensure that the battery cables do not contact any sharp edges or each other.**

Servicing a Replacement Battery

The original battery is maintenance-free and does not require service. For servicing a replacement battery, refer to the battery manufacturer's instructions.

Drive System Maintenance

Servicing the Tracks

Service Interval: After the first 50 hours—Check and adjust the track tension.

Before each use or daily—Clean the tracks.

Before each use or daily—Check the tracks for excessive wear (If the tracks are worn, replace them).

Every 100 hours—Check and adjust the track tension.

Every 250 hours/Yearly (whichever comes first)—Check and grease the road wheels.

Cleaning the Tracks

1. Park the machine on a level surface and engage the parking brake.
2. With the bucket installed and pointing down, lower it into the ground so that the front of the traction unit lifts off the ground a few centimeters (inches).
3. Shut off the engine and remove the key.
4. Using a water hose or pressure washer, remove dirt from each track system.

Important: **Ensure that you use high-pressure water to wash only the track area. Do not use a high-pressure washer to clean the rest of the machine. Do not use high pressure water between the drive sprocket and the machine or you may damage the motor seals. High-pressure washing can damage the electrical system and hydraulic valves or deplete grease.**

Important: **Ensure that you fully clean the road wheels, the tension wheel, and the drive sprocket (Figure 45). The road wheels should rotate freely when clean.**

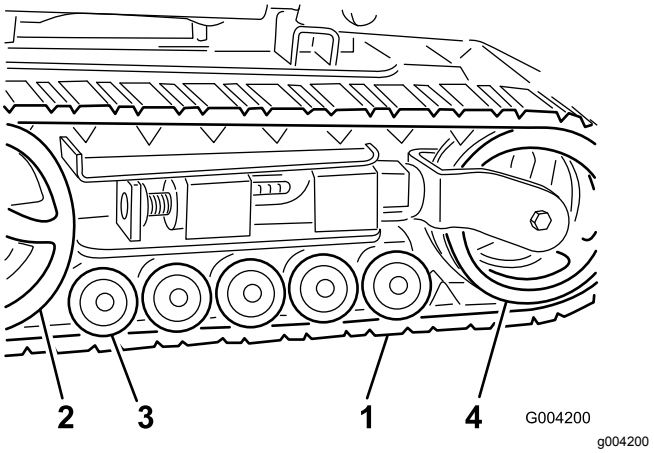

Figure 45

1. Track
2. Drive sprocket
3. Road wheels
4. Tension wheel

Adjusting the Track Tension

There should be 7 cm (2-3/4 inches) between the tension nut and the back of the tension tube (Figure 46). If not, adjust the track tension using the following procedure:

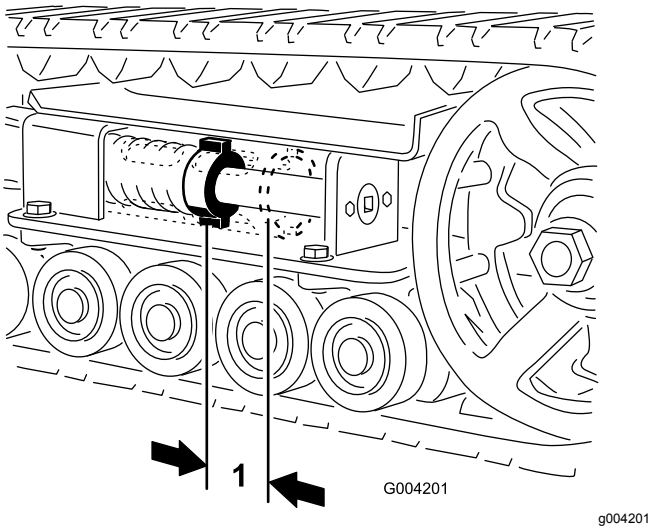

Figure 46

1. 7 cm (2-3/4 inches)

1. Park the machine on a level surface, engage the parking brake, and lower the loader arms.
2. Shut off the engine and remove the key.
3. Lift/support the side of the unit to be worked on so that the track is off the ground.
4. Remove the locking bolt and nut (Figure 47).

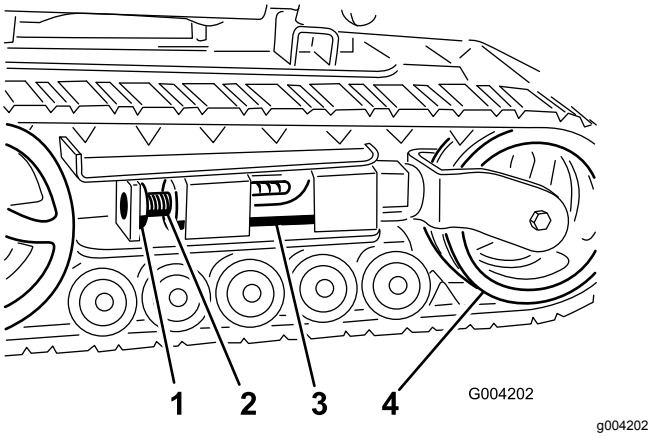

Figure 47

1. Locking bolt
2. Tensioning screw
3. Tension tube
4. Tension wheel

5. Using a 1/2-inch drive ratchet, turn the tensioning screw counterclockwise until the distance between the tension nut and the back of the tension tube (Figure 46) is 7 cm (2-3/4 inches).
6. Align the closest notch in the tension screw to the locking bolt hole and secure the screw with the locking bolt and nut (Figure 47).
7. Lower the traction unit to the ground.

Replacing the Tracks

Replacing Narrow-Width Tracks

When the tracks are badly worn, replace them.

Note: You have narrow-width tracks if the front tension wheels are mounted inside a fork on the end of the tension tube (Figure 48).

1. Park the machine on a level surface, engage the parking brake, and lower the loader arms.
2. Shut off the engine and remove the key.
3. Lift/support the side of the unit to be worked on so that the track is 8 to 10 cm (3 to 4 inches) off the ground.
4. Remove the locking bolt and nut (Figure 47).
5. Using a 1/2-inch drive ratchet, release the drive tension by turning the tensioning screw clockwise (Figure 47 and Figure 48).

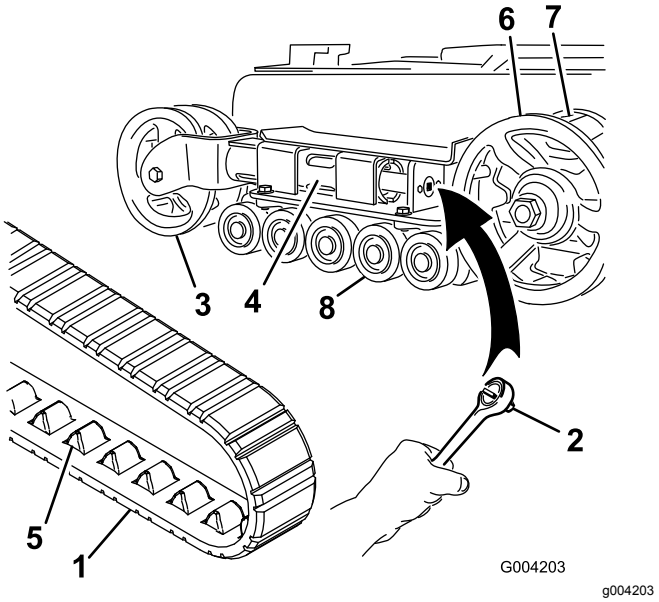

Figure 48

1.	Track	5.	Track lug
2.	Socket wrench (1/2 inch)	6.	Drive sprocket
3.	Tension wheel	7.	Sprocket cog
4.	Tension tube	8.	Road wheels

6. Push the tension wheel toward the rear of the unit to move the tension tube against the frame (Figure 48).

   If it does not touch the frame, continue turning the tensioning screw until it does.
7. Begin removing the track at the top of the tension wheel, peeling it off the wheel while rotating the track forward.
8. When the track is off the tension wheel, remove it from the drive sprocket and road wheels (Figure 48).
9. Beginning at the drive sprocket, coil the new track around the sprocket, ensuring that the lugs on the track fit between the cogs on the sprocket (Figure 48).
10. Push the track under and between the road wheels (Figure 48).
11. Starting at the bottom of the tension wheel, install the track around the wheel by rotating the track rearward while pushing the lugs into the wheel.
12. Turn the tensioning screw counterclockwise until the distance between the tension nut and the back of the tension tube (Figure 46) is 7 cm (2-3/4 inches).
13. Align the closest notch in the tension screw to the locking bolt hole and secure the screw with the locking bolt and nut.
14. Lower the traction unit to the ground.
15. Repeat steps 3 through 14 to replace the other track.

Replacing Wide-Width Tracks

When the tracks are badly worn, replace them.

Note: You have wide-width tracks if the front tension wheels are mounted on the sides of the end of the tension tube (Figure 49).

1. Park the machine on a level surface, engage the parking brake, and lower the loader arms.
2. Shut off the engine and remove the key.
3. Lift/support the side of the unit to be worked on so that the track is 8 to 10 cm (3 to 4 inches) off the ground.
4. Remove the locking bolt and nut (Figure 47).
5. Using a 1/2-inch drive ratchet, release the drive tension by turning the tensioning screw clockwise (Figure 47 and Figure 49).

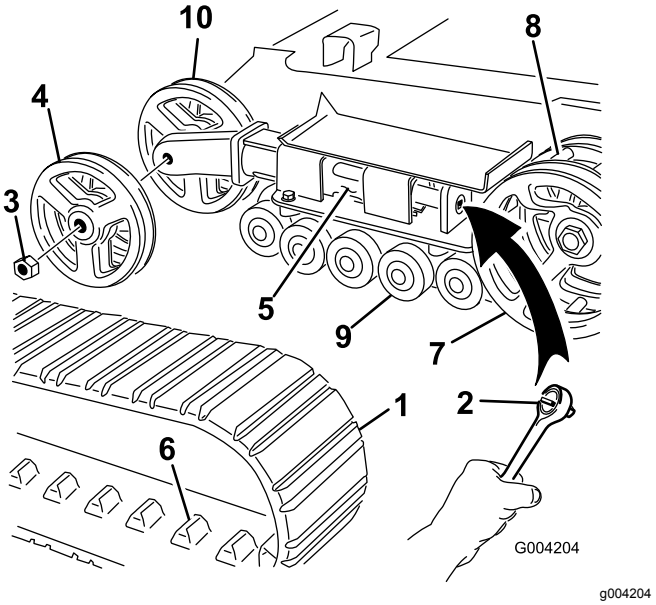

Figure 49

1.	Track	6.	Track lug
2.	Socket wrench (1/2 inch)	7.	Drive sprocket
3.	Tension wheel nut	8.	Sprocket cog
4.	Outer tension wheel	9.	Road wheels
5.	Tension tube	10.	Inner tension wheel

6. Push the tension wheel toward the rear of the unit to move the tension tube against the frame (Figure 49).

   If it does not touch the frame, continue turning the tensioning screw until it does.
7. Remove the nut securing the outer tension wheel and remove the wheel (Figure 49).
8. Remove the track (Figure 49).

9. Remove the nut securing the inner tension wheel and remove the wheel (Figure 49).
10. Pull the 4 large washers out of the 2 wheels, 1 on each side of each wheel.
11. Clean the old grease and dirt out of the area between where the washers were installed and the bearings inside the wheels, then fill this area on each side of each wheel with grease.
12. Install the large washers on the wheels over the grease.
13. Install the inner tension wheel and secure it with the nut removed previously (Figure 49).
14. Torque the nut to 407 N·m (300 ft-lb).
15. Install the new track, ensuring that the lugs in the track fit between the cogs in the middle of the drive sprocket (Figure 49).
16. Install the outer tension wheel and secure it with the nut removed previously (Figure 49).
17. Torque the nut to 407 N·m (300 ft-lb).
18. Turn the tensioning screw counterclockwise until the distance between the tension nut and the back of the tension tube (Figure 46) is 7 cm (2-3/4 inches).
19. Align the closest notch in the tension screw to the locking bolt hole and secure the screw with the locking bolt and nut.
20. Lower the traction unit to the ground.
21. Repeat steps 3 through 20 to replace the other track.

Maintaining the Road Wheels

1. Remove the tracks; refer to Replacing the Tracks (page 36).
2. Remove the 4 bolts securing each lower track guide which contains the road wheels, and remove them (Figure 50).

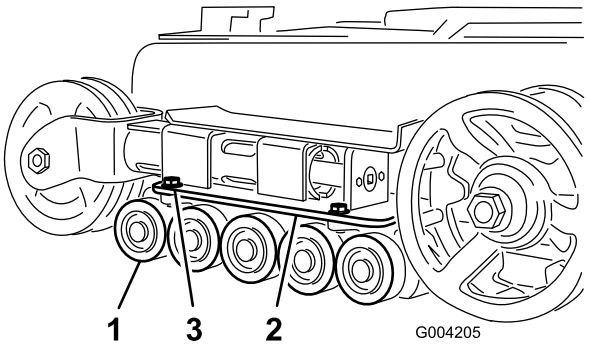

g004205

Figure 50

1. Road wheels
2. Lower track guide
3. Track guide bolts (only 2 shown)

3. Remove the snap ring and cap from a road wheel (Figure 51).

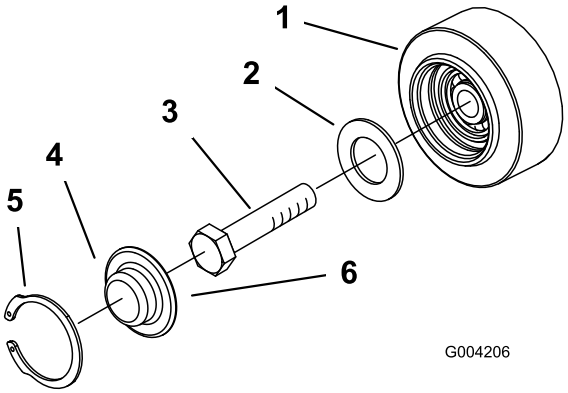

g004206

Figure 51

1. Road wheel
2. Gasket
3. Bolt
4. Road wheel cap
5. Snap ring
6. Add grease under the cap

4. Check the grease under the cap and around the gasket (Figure 51). If it is dirty, gritty, or depleted, clean out all of the grease, replace the gasket, and add new grease.
5. Ensure that the road wheel turns smoothly on the bearing. If it is frozen, replace the road wheel as described in the *Road Wheel Kit Installation Instructions* or contact your Authorized Service Dealer for repair.
6. Place the greased road wheel cap over the bolt head (Figure 48).
7. Secure the road wheel cap with the snap ring (Figure 48).
8. Repeat steps 3 through 7 for the other road wheels.
9. Install each track guide to the traction-unit frame using the fasteners you removed previously. Torque the bolts to 91 to 112 N·m (67 to 83 ft-lb).
10. Install the tracks; refer to Replacing the Tracks (page 36).

Brake Maintenance

Testing the Parking Brake

Service Interval: Before each use or daily

1. Engage the parking-brake; refer to Parking-Brake Lever (page 12).
2. Start the engine.
3. Slowly attempt to drive the machine forward or rearward.
4. If the machine moves, contact your Authorized Service Dealer for service.

Belt Maintenance

Inspecting and Replacing the Drive Belt

Service Interval: Every 25 hours—Inspect the drive belt for wear or damage.

Every 200 hours—Replace the drive belt.

To replace the drive belt, complete the following procedure:

Note: To complete this procedure, you need a sturdy metal hook to disconnect the idler-pulley spring, such as the spring-removal tool (Toro Part No. 92-5771) available for order from your Authorized Service Dealer.

1. Park the machine on a level surface, engage the parking brake, and lower the loader arms.
2. Shut off the engine and remove the key.
3. Open the hood.
4. Connect the hook on the spring-removal tool to the hook on the idler pulley spring, and disconnect the spring from the stud as shown in Figure 52.

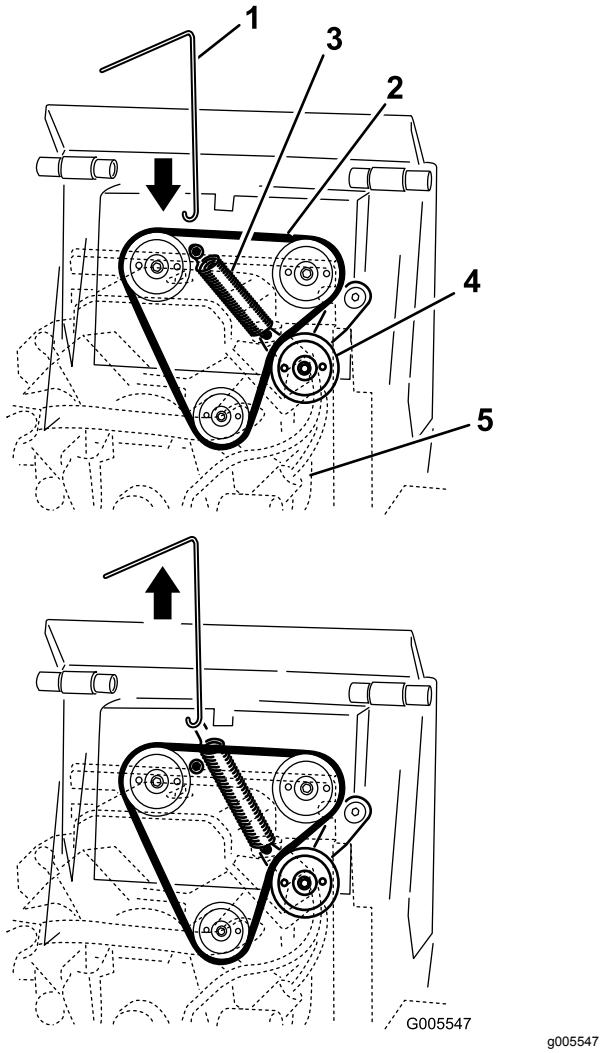

Figure 52

1. Spring-removal tool
2. Drive belt
3. Idler pulley spring (spring cover not shown)
4. Idler pulley
5. Engine (see-through for illustrative purposes)

5. Remove the idler pulley spring from the idler-pulley assembly (Figure 53).

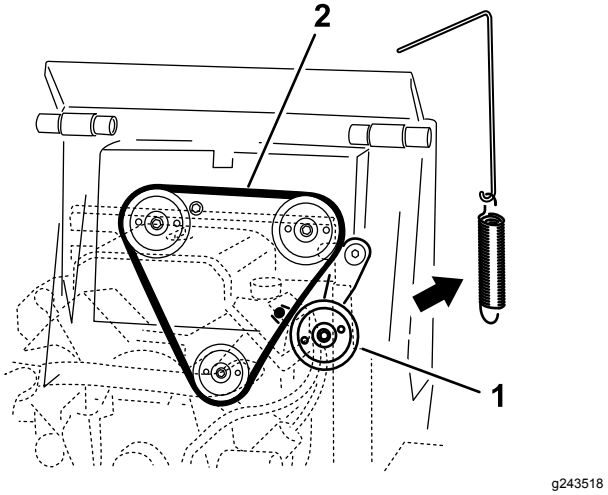

Figure 53

Spring cover not shown

1. Idler-pulley assembly
2. Drive-belt routing

6. Remove the belt from the 3 pulleys (Figure 54).

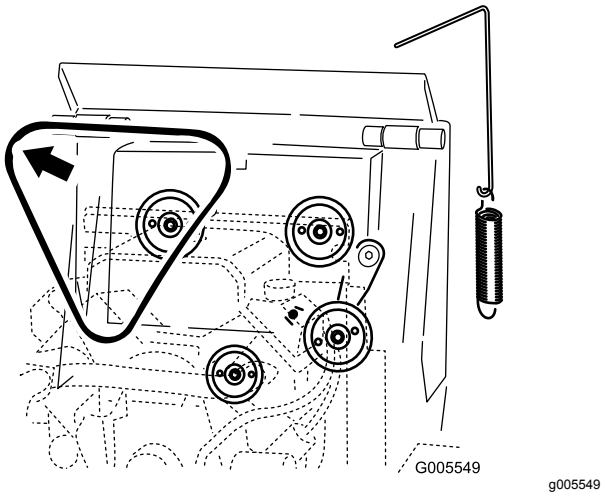

Figure 54

Spring cover not shown

7. Install a new drive belt around the 3 pulleys (Figure 53).
8. Install the end of the idler pulley spring to the arm on the idler-pulley assembly.

   Important: **If you have removed the spring cover, ensure to install it over the spring at this time.**

9. Using the spring-removal tool, pull the idler spring hook up and around the stud on the traction unit, pulling the idler pulley tight.
10. Remove the spring-removal tool from the spring and close the hood.

Controls System Maintenance

Adjusting the Controls

The factory adjusts the controls before shipping the machine. However, after many hours of use, you may need to adjust the traction control alignment, the NEUTRAL position of the traction control, and the tracking of the traction control in the full forward position.

Important: **To adjust the controls properly, complete each procedure in the order listed.**

Adjusting the Traction Control Alignment

If the traction control bar does not rest flush and square with the reference bar when in the full backward position, immediately complete the following procedure:

1. Park the machine on a level surface, engage the parking brake, and lower the loader arms.
2. Shut off the engine and remove the key.
3. Pull straight back on the traction control so the front of the control contacts the reference bar (Figure 55).

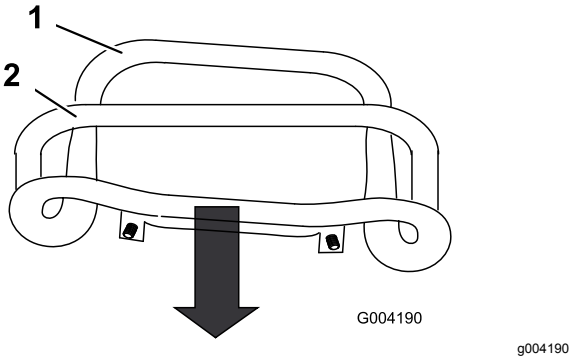

Figure 55

1. Front of the control (out of alignment)
2. Reference bar

4. If the front of the traction control does not rest square and flush with the reference bar, loosen the flange nut and bolt in the stem of the traction control (Figure 56).

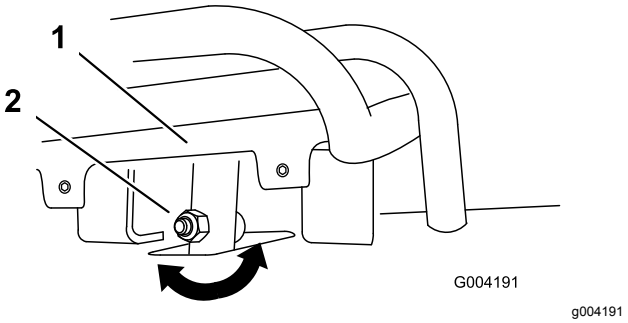

Figure 56

1. Traction control
2. Stem, bolt, and nut

5. Adjust the traction control so that it rests flush against the reference bar when you pull it straight back (Figure 56 and Figure 57).

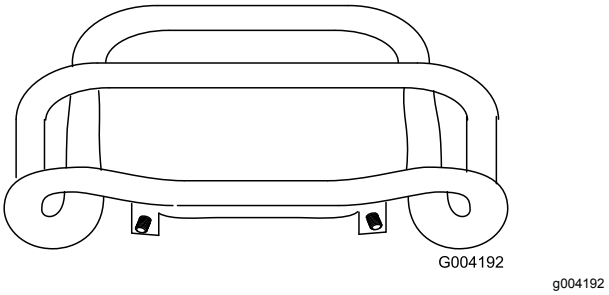

Figure 57

6. Tighten the flange nut and bolt in the traction control stem.

Adjusting the Traction Control Neutral Position

If the machine creeps forward or backward when the traction control is in the NEUTRAL position and the unit is warm, immediately complete the following procedure:

1. Lift/support the machine so that both tracks are off the ground.
2. Open the rear-access cover.
3. Loosen the jam nuts on the traction rods, under the control panel (Figure 58).

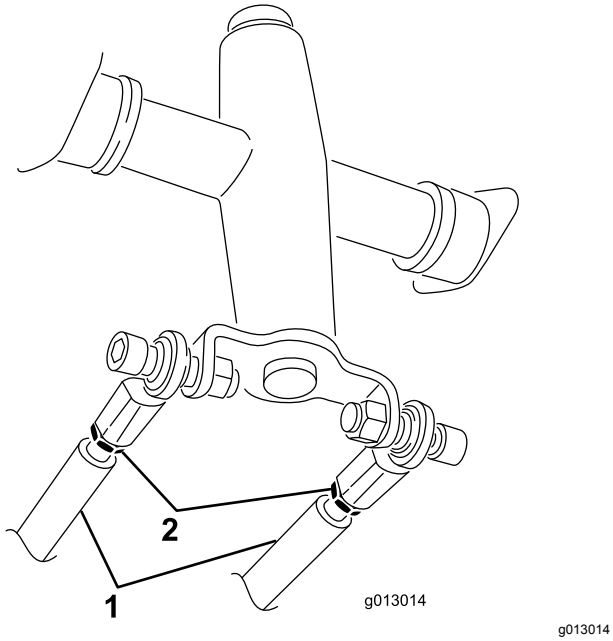

Figure 58

1. Traction rod
2. Jam nut

4. Start the traction unit and set the throttle to about 1/3 open position.

⚠ WARNING

When the machine is running, you could be caught and injured in moving parts or burned on hot surfaces.

Stay away from pinch points, moving parts, and hot surfaces when adjusting the running machine.

5. If the **left** track moves, lengthen or shorten the **right** traction rod until the track stops moving.
6. If the **right** track moves, lengthen or shorten the **left** traction rod until the track stops moving.
7. Tighten the jam nuts.
8. Close the rear-access cover.
9. Shut off the engine and lower the machine to the ground.
10. Drive the machine in full reverse, checking to see if the unit tracks straight. If it does not, note the direction it veers. Repeat the adjustment previously described so that it tracks straight in reverse.

Adjusting the Tracking of the Traction Control, Full Forward Position

If the machine does not drive straight when you hold the traction control against the reference bar, complete the following procedure:

1. Drive the machine with the traction control against the reference bar, noting which direction the traction unit veers.
2. Release the traction control.
3. If the traction unit veers to the **left**, loosen the **right** jam nut and adjust the tracking set screw on the front of the traction control (Figure 59).
4. If the traction unit veers to the **right**, loosen the **left** jam nut and adjust the tracking set screw on the front of the traction control (Figure 59).

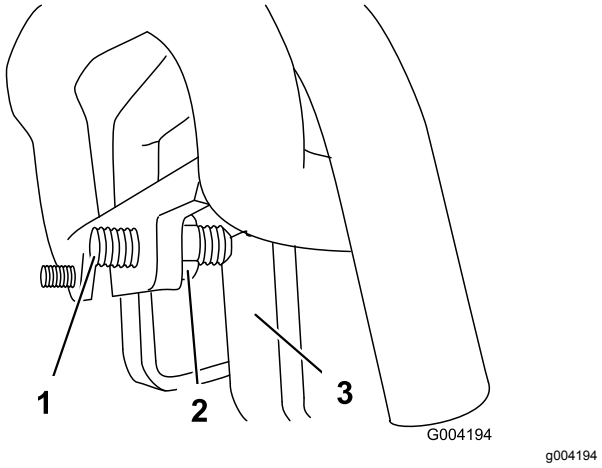

Figure 59

1. Set screw
2. Jam nut
3. Stop

5. Repeat steps 1 through 4 until the machine drives straight in the full forward position.

Important: **Ensure that the tracking set screws touch the stops in the full forward position to avoid over stroking the hydraulic pumps.**

Hydraulic System Maintenance

Hydraulic System Safety

- Seek immediate medical attention if fluid is injected into skin. Injected fluid must be surgically removed within a few hours by a doctor.
- Ensure that all hydraulic-fluid hoses and lines are in good condition and all hydraulic connections and fittings are tight before applying pressure to the hydraulic system.
- Keep your body and hands away from pinhole leaks or nozzles that eject high-pressure hydraulic fluid.
- Use cardboard or paper to find hydraulic leaks.
- Safely relieve all pressure in the hydraulic system before performing any work on the hydraulic system.

Relieving Hydraulic Pressure

To relieve hydraulic pressure while the engine is on, disengage the auxiliary hydraulics and fully lower the loader arms.

To relieve the pressure while the engine is off, move the auxiliary-hydraulics lever between the forward and reverse flow positions to relieve auxiliary hydraulic pressure, and cycle the loader-arm/attachment-tilt lever between the forward positions to lower the loader arms (Figure 60).

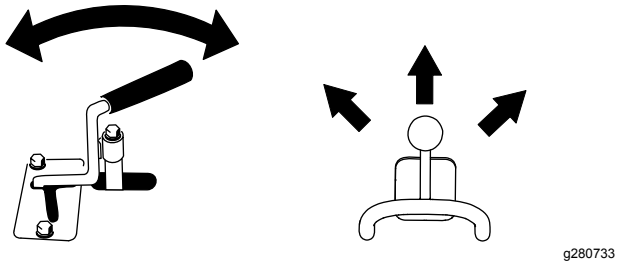

Figure 60

Hydraulic-Fluid Specifications

Hydraulic Tank Capacity: 45.4 L (12 US gallons)

Use only 1 of the following fluids in the hydraulic system:

- **Toro Premium Transmission/Hydraulic Tractor Fluid** (refer to your Authorized Toro Dealer for more information)
- **Toro PX Extended Life Hydraulic Fluid** (refer to your Authorized Toro Dealer for more information)
- If either of the above Toro fluids are not available, you may use another **Universal Tractor Hydraulic Fluid (UTHF**), but they must be only **conventional, petroleum-based** products. The specifications must fall within the listed range for all the following material properties and the fluid should meet the listed industry standards. Check with your hydraulic fluid supplier to determine if the fluid meets these specifications.

  Note: Toro does not assume responsibility for damage caused by improper substitutions, so use only products from reputable manufacturers who will stand behind their recommendations.

Material Properties	
Viscosity, ASTM D445	cSt at 40°C: 55 to 62
	cSt at 100°C: 9.1 to 9.8
Viscosity index, ASTM D2270	140 to 152
Pour Point, ASTM D97	-37 to -43°C (-35 to -46°F)
Industry Standards	
API GL-4, AGCO Powerfluid 821 XL, Ford New Holland FNHA-2-C-201.00, Kubota UDT, John Deere J20C, Vickers 35VQ25 and Volvo WB-101/BM	

Note: Many hydraulic fluids are almost colorless, making it difficult to spot leaks. A red dye additive for the hydraulic system fluid is available in 20 ml (2/3 fl oz) bottles. One bottle is sufficient for 15 to 22 L (4 to 6 US gallons) of hydraulic fluid. Order Part No. 44-2500 from your Authorized Service Dealer.

Checking the Hydraulic-Fluid Level

Service Interval: Every 25 hours

Check the hydraulic-fluid level before the engine is first started and after every 25 operating hours.

Refer to Hydraulic-Fluid Specifications (page 43) for hydraulic-fluid specifications.

Important: **Always use the correct hydraulic fluid. Unspecified fluids will damage the hydraulic system.**

1. Remove any attachments.
2. Park the machine on a level surface, lower the loader arms, and fully retract the tilt cylinder.
3. Shut off the engine, remove the key, and allow the engine to cool.
4. Open the hood and remove the left side screen.
5. Clean the area around the filler neck of the hydraulic tank (Figure 61).
6. Remove the filler-neck cap and check the fluid level on the dipstick (Figure 61).

   The fluid level should be between the marks on the dipstick.

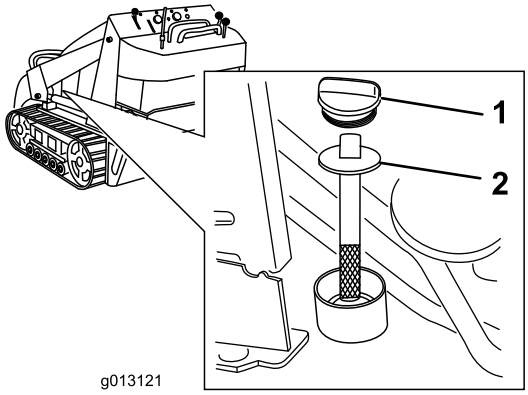

g013121

Figure 61

1. Filler-neck cap
2. Dipstick

7. If the level is low, add enough fluid to raise it to the proper level.
8. Install the filler-neck cap.
9. Replace the left side screen and close the hood.

Replacing the Hydraulic Filter

Service Interval: After the first 8 hours
Every 200 hours

Important: **Do not substitute an automotive oil filter; otherwise, severe hydraulic system damage may result.**

1. Park the machine on a level surface, engage the parking brake, and lower the loader arms.
2. Shut off the engine and remove the key.
3. Open the rear access cover.
4. Place a drain pan under the filter (Figure 62).

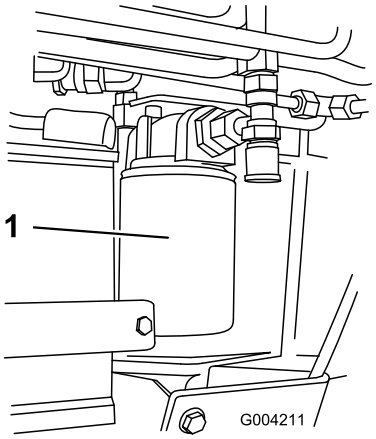

g004211

Figure 62

1. Hydraulic filter

5. Remove the old filter (Figure 62) and wipe the surface of the filter adapter gasket clean.
6. Apply a thin coat hydraulic fluid to the rubber gasket on the replacement filter.
7. Install the replacement hydraulic filter onto the filter adapter (Figure 62). Tighten it clockwise until the rubber gasket contacts the filter adapter, then tighten the filter an additional 3/4 turn.
8. Clean up any spilled fluid.
9. Start the engine and let it run for about 2 minutes to purge air from the system.
10. Shut off the engine, remove the key, and check for leaks.
11. Check the fluid level in the hydraulic tank and add fluid to raise the level to the mark on dipstick; refer to Checking the Hydraulic-Fluid Level (page 44).

    Important: **Do not overfill the tank.**
12. Close the rear-access cover.

Changing the Hydraulic Fluid

Service Interval: Every 400 hours/Yearly (whichever comes first)

1. Park the machine on a level surface, remove any attachment, and engage the parking brake.
2. Raise the loader arms and install the cylinder lock.
3. Shut off the engine, remove the key, and allow the engine to cool.
4. Open the hood and remove the left side screen.
5. Remove the hydraulic-tank cap and dipstick (Figure 63).

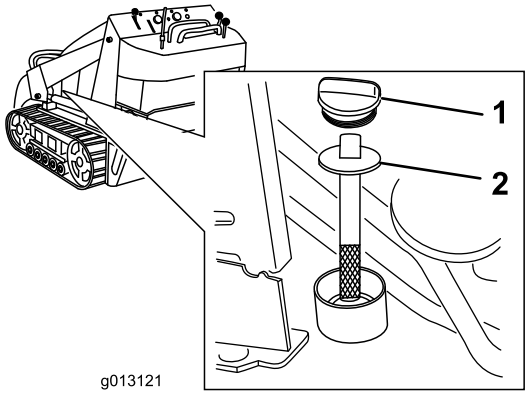

g013121

Figure 63

1. Hydraulic-tank cap 2. Dipstick

6. Place a large drain pain capable of holding 57 L (15 US gallons) under the drain plug on the front of the machine (Figure 64).

   Note: The drain plug is located behind the front weights, under the sloped plate.

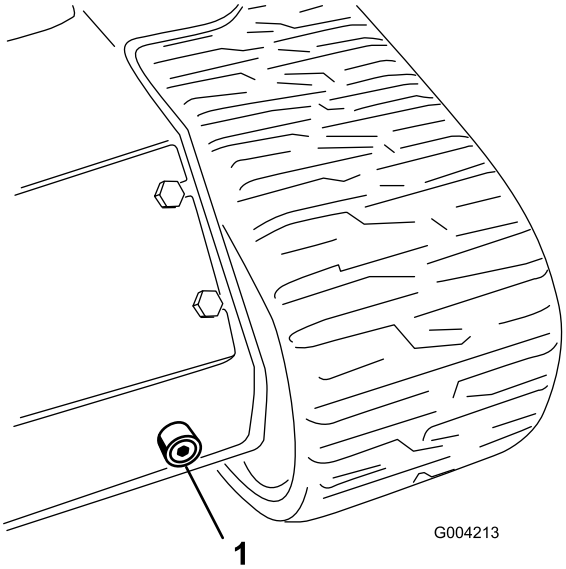

g004213

Figure 64

1. Drain plug

7. Remove the drain plug and allow the oil to drain into the pan (Figure 64).
8. When finished, install and tighten the drain plug.

   Note: Dispose of the used oil at a certified recycling center.
9. Fill the hydraulic tank with hydraulic fluid as specified in Hydraulic-Fluid Specifications (page 43).
10. Start the engine and let it run for a few minutes.
11. Shut off the engine.
12. Check the hydraulic-fluid level and add fluid to fill the tank if necessary; refer to Checking the Hydraulic-Fluid Level (page 44).
13. Install the side screen and close the hood.

Cleaning

Removing Debris

Service Interval: Before each use or daily

Important: **Operating the engine with blocked screens and/or cooling shrouds removed will result in engine damage from overheating.**

1. Park the machine on a level surface and lower the loader arms.
2. Shut off the engine, remove the key, and allow the engine to cool.
3. Open the hood and secure the prop rod.
4. Clean any debris from the front and side screens.
5. Wipe away debris from the air cleaner.
6. Clean any debris buildup on the engine and in the oil cooler fins with a brush or blower.

   Important: **Operating the engine with blocked screens and/or cooling shrouds removed will result in engine damage due to overheating.**
7. Clean debris from the hood opening, muffler, heat shields, and radiator screen (if applicable).
8. Close the hood.

Cleaning the Chassis

Service Interval: Every 100 hours—Check for dirt buildup in the chassis.

Using a flashlight, open the hood and inspect the area under the engine regularly. When the debris is 2.5 to 5 cm (1 to 2 inches) deep, complete the following procedure (refer to Figure 65 throughout this procedure):

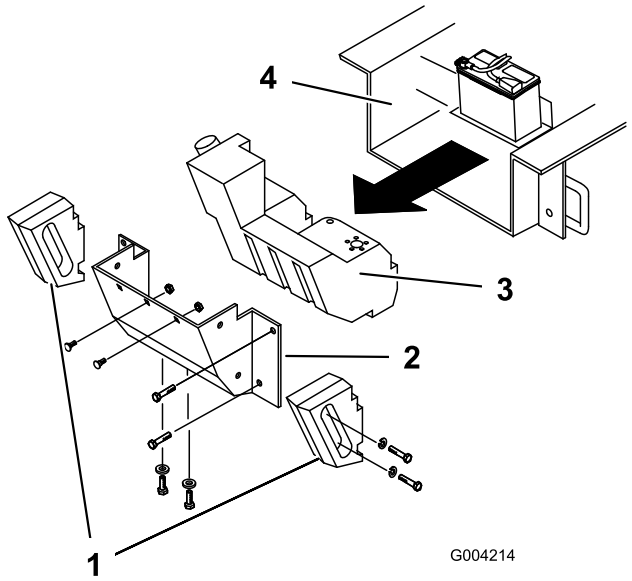

g004214

Figure 65

1. Side weights
2. Rear panel
3. Fuel tank
4. Chassis

1. Park the machine on a level surface, engage the parking brake, and lower the loader arms.
2. Lift and support the front of the machine.
3. Shut off the engine and remove the key.
4. Disconnect the negative battery cable.
5. Remove the bolts, washers, and lock washers securing the 2 side weights, removing the weights (Figure 65).
6. Open the rear-access cover.
7. Remove the 2 carriage bolts and washers from the battery base.
8. Remove the 6 nuts and bolts securing the rear panel; remove the panel (Figure 65).
9. Place a clamp on the fuel line, 2 inches from where it comes out of the fuel tank.
10. Slide the fuel tank to the rear (Figure 65).
11. Disconnect the fuel line from the fitting on the fuel tank.
12. Disconnect the 2 wires leading to the right side of the tank (Figure 66).

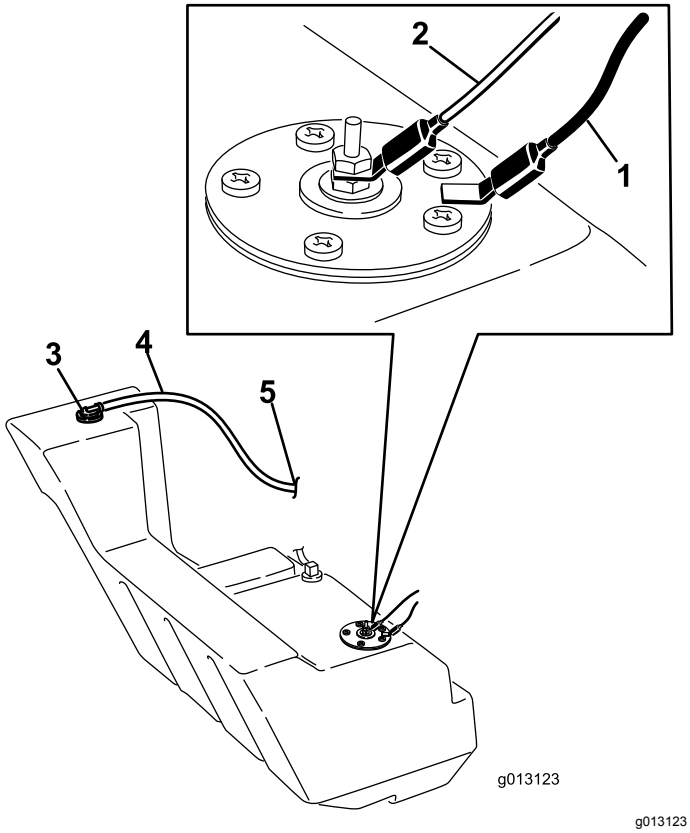

Figure 66

1. Black wire
2. Orange wire
3. Fuel-tank-vent fitting
4. Vent hose
5. To the carbon canister

13. Disconnect the vent hose from the fitting on top of the tank. Plug the fitting so that no fuel can leak out during the procedure.
14. Carefully remove the tank and set it upright to keep from spilling the fuel.

⚠ DANGER

In certain conditions, fuel is extremely flammable and highly explosive. A fire or explosion from fuel can burn you and others and can damage property.

Refer to Fuel Safety (page 14) for a complete list of fuel related precautions.

15. Remove any large deposits of debris.
16. Wash out the chassis with water until the water running out the back of the unit is clear.

    Important: **Take care not to get water into the engine or electrical components.**

17. Slide the fuel tank part way into the chassis (Figure 65).
18. Remove the plug from the vent fitting and connect the vent hose to it.
19. Connect the fuel line and remove the clamp.
20. Secure the tank cap and tighten it until it clicks.
21. On the right side of the tank, connect the orange wire to the center post and the black wire to the outside post (Figure 66).
22. Slide the tank all the way into the machine.

    Important: **The fuel line and wires must be away from the engine pulleys and the frame.**

23. Replace the rear panel and secure it with the 6 bolts and nuts removed previously (Figure 65).
24. Secure the battery tray with the bolts and washers removed previously.
25. Install the side weights with the bolts, washers, and lock washers removed previously (Figure 65).
26. Close the rear-access cover.
27. Lower the machine to the ground.

Storage

Storage Safety

- Shut off the engine, remove the key, wait for all moving parts to stop, and allow the machine to cool before storing it.
- Do not store the machine or fuel near flames.

Storage

1. Park the machine on a level surface, engage the parking brake, and lower the loader arms.
2. Shut off the engine and remove the key.
3. Remove dirt and grime from the external parts of the entire machine, especially the engine. Clean dirt and chaff from the outside of both the cylinder head fins and blower housing of the engine.

   Important: **You can wash the machine with mild detergent and water. Do not pressure-wash the machine. Avoid excessive use of water, especially near the control panel, engine, hydraulic pumps, and motors.**
4. Service the air cleaner; refer to Servicing the Air Cleaner (page 28).
5. Grease the machine; refer to Greasing the Machine (page 27).
6. Change the engine oil; refer to Changing the Engine Oil (page 30).
7. Remove the spark plugs and check the condition of each; refer to Servicing the Spark Plug(s) (page 31).
8. With the spark plugs removed from the engine, pour 30 ml (2 tablespoons) of engine oil into each spark-plug hole.
9. Place rags over the spark-plug holes to catch any oil spray, then use the starter to crank the engine and distribute the oil inside the cylinder.
10. Install the spark plugs, but do not install the wires on the spark plugs.
11. Charge the battery; refer to Charging the Battery (page 34).
12. For storage over 30 days, prepare the machine as follows:

    A. Add a petroleum-based stabilizer/conditioner to fuel in the tank. Follow the mixing instructions from the fuel-stabilizer manufacturer. Do not use an alcohol-based stabilizer (ethanol or methanol).

    Note: A fuel stabilizer/conditioner is most effective when you mix it with fresh fuel and use it at all times.

    B. Run the engine to distribute conditioned fuel through the fuel system for 5 minutes.

    C. Shut off the engine, allow it to cool and drain the fuel tank using a pump-type syphon.

    D. Start the engine and run it until it shuts off.

    E. Choke the engine.

    F. Start and run the engine until it does not start again.

    G. Dispose of fuel properly. Recycle it according to local codes.

    Important: **Do not store fuel containing stabilizer/conditioner longer than the duration recommended by the fuel-stabilizer manufacturer.**
13. Check and adjust the track tension; refer to Servicing the Tracks (page 35).
14. Check and tighten all fasteners. Repair or replace any worn, damaged, or missing parts.
15. Paint all scratched or bare metal surfaces with paint s available from your Authorized Service Dealer.
16. Store the machine in a clean, dry garage or storage area. Remove the key from the ignition switch and keep it in a memorable place.
17. Cover the machine to protect it and keep it clean.

Troubleshooting

Problem	Possible Cause	Corrective Action
The engine does not start, starts hard, or fails to keep running.	1. The starting procedure is incorrect. 2. The fuel tank is empty. 3. The choke is not engaged. 4. The air cleaner is dirty. 5. The spark plug wires are loose or disconnected. 6. The spark plugs are pitted, fouled, or the gap is incorrect. 7. There is dirt in the fuel filter. 8. Dirt, water, stale fuel, or incorrect fuel is in the fuel system.	1. Use the correct starting procedure. 2. Fill the tank with fresh fuel. 3. Engage the choke. 4. Clean or replace the air-cleaner elements. 5. Install the wires on the spark plugs. 6. Install new, correctly gapped spark plugs. 7. Replace the fuel filter. 8. Contact your Authorized Service Dealer.
The engine loses power.	1. The engine load is excessive. 2. The high-idle speed is low. 3. The air cleaner is dirty. 4. The engine-oil level is incorrect. 5. The cooling fins and air passages under the engine blower housing are plugged. 6. The spark plugs are pitted, fouled, or the gap is incorrect. 7. There is dirt in the fuel filter. 8. Dirt, water, stale fuel, or incorrect fuel is in the fuel system.	1. Reduce the load; use a lower ground speed. 2. Contact your Authorized Service Dealer. 3. Clean or replace the air cleaner elements. 4. Fill or drain to the Full mark. 5. Remove any obstructions from the cooling fins and air passages. 6. Install new, correctly gapped spark plugs. 7. Replace the fuel filter. 8. Contact your Authorized Service Dealer.
The engine overheats.	1. The engine load is excessive. 2. The high-idle speed is low. 3. The engine-oil level is incorrect. 4. The cooling fins and air passages under the engine blower housing are plugged.	1. Reduce the load; use a lower ground speed. 2. Contact your Authorized Service Dealer. 3. Fill or drain to the Full mark. 4. Remove any obstructions from the cooling fins and air passages.
There is abnormal vibration.	1. The engine mounting bolts are loose.	1. Tighten the engine mounting bolts.
The machine does not drive.	1. The parking brake is engaged. 2. The hydraulic-fluid level is low. 3. The hydraulic system is damaged.	1. Disengage the parking brake. 2. Add hydraulic fluid to the reservoir. 3. Contact your Authorized Service Dealer.

Notes:

European Privacy Notice

The Information Toro Collects
Toro Warranty Company (Toro) respects your privacy. In order to process your warranty claim and contact you in the event of a product recall, we ask you to share certain personal information with us, either directly or through your local Toro company or dealer.

The Toro warranty system is hosted on servers located within the United States where privacy law may not provide the same protection as applies in your country.

BY SHARING YOUR PERSONAL INFORMATION WITH US, YOU ARE CONSENTING TO THE PROCESSING OF YOUR PERSONAL INFORMATION AS DESCRIBED IN THIS PRIVACY NOTICE.

The Way Toro Uses Information
Toro may use your personal information to process warranty claims, to contact you in the event of a product recall and for any other purpose which we tell you about. Toro may share your information with Toro's affiliates, dealers or other business partners in connection with any of these activities. We will not sell your personal information to any other company. We reserve the right to disclose personal information in order to comply with applicable laws and with requests by the appropriate authorities, to operate our systems properly or for our own protection or that of other users.

Retention of your Personal Information
We will keep your personal information as long as we need it for the purposes for which it was originally collected or for other legitimate purposes (such as regulatory compliance), or as required by applicable law.

Toro's Commitment to Security of Your Personal Information
We take reasonable precautions in order to protect the security of your personal information. We also take steps to maintain the accuracy and current status of personal information.

Access and Correction of your Personal Information
If you would like to review or correct your personal information, please contact us by email at legal@toro.com.

Australian Consumer Law

Australian customers will find details relating to the Australian Consumer Law either inside the box or at your local Toro Dealer.

California Proposition 65 Warning Information

What is this warning?

You may see a product for sale that has a warning label like the following:

WARNING: Cancer and Reproductive Harm—www.p65Warnings.ca.gov.

What is Prop 65?

Prop 65 applies to any company operating in California, selling products in California, or manufacturing products that may be sold in or brought into California. It mandates that the Governor of California maintain and publish a list of chemicals known to cause cancer, birth defects, and/or other reproductive harm. The list, which is updated annually, includes hundreds of chemicals found in many everyday items. The purpose of Prop 65 is to inform the public about exposure to these chemicals.

Prop 65 does not ban the sale of products containing these chemicals but instead requires warnings on any product, product packaging, or literature with the product. Moreover, a Prop 65 warning does not mean that a product is in violation of any product safety standards or requirements. In fact, the California government has clarified that a Prop 65 warning "is not the same as a regulatory decision that a product is 'safe' or 'unsafe.'" Many of these chemicals have been used in everyday products for years without documented harm. For more information, go to https://oag.ca.gov/prop65/faqs-view-all.

A Prop 65 warning means that a company has either (1) evaluated the exposure and has concluded that it exceeds the "no significant risk level"; or (2) has chosen to provide a warning based on its understanding about the presence of a listed chemical without attempting to evaluate the exposure.

Does this law apply everywhere?

Prop 65 warnings are required under California law only. These warnings are seen throughout California in a wide range of settings, including but not limited to restaurants, grocery stores, hotels, schools, and hospitals, and on a wide variety of products. Additionally, some online and mail order retailers provide Prop 65 warnings on their websites or in catalogs.

How do the California warnings compare to federal limits?

Prop 65 standards are often more stringent than federal and international standards. There are various substances that require a Prop 65 warning at levels that are far lower than federal action limits. For example, the Prop 65 standard for warnings for lead is 0.5 µg/day, which is well below the federal and international standards.

Why don't all similar products carry the warning?

- Products sold in California require Prop 65 labelling while similar products sold elsewhere do not.
- A company involved in a Prop 65 lawsuit reaching a settlement may be required to use Prop 65 warnings for its products, but other companies making similar products may have no such requirement.
- The enforcement of Prop 65 is inconsistent.
- Companies may elect not to provide warnings because they conclude that they are not required to do so under Prop 65; a lack of warnings for a product does not mean that the product is free of listed chemicals at similar levels.

Why does Toro include this warning?

Toro has chosen to provide consumers with as much information as possible so that they can make informed decisions about the products they buy and use. Toro provides warnings in certain cases based on its knowledge of the presence of one or more listed chemicals without evaluating the level of exposure, as not all the listed chemicals provide exposure limit requirements. While the exposure from Toro products may be negligible or well within the "no significant risk" range, out of an abundance of caution, Toro has elected to provide the Prop 65 warnings. Moreover, if Toro does not provide these warnings, it could be sued by the State of California or by private parties seeking to enforce Prop 65 and subject to substantial penalties.