Form No. 3324-378

TORO®

ProLine BP6900

Backpack Blower

Model No. 53047—200000001 and Up

Operator’s Manual

WARNING

The engine exhaust from this product contains chemicals known to the State of California to cause cancer, birth defects, or other reproductive harm.

Contents

	Page
Introduction	2
Safety	3
Assembly	3
Before Starting	4
Mixing Gasoline and Oil	4
Using Stabilizer/Conditioner	5
Operation	6
Using the Throttle Lever	6
Starting the Engine	6
Stopping the Engine	7
Maintenance	8
Periodic Maintenance Chart	8
Servicing the Air Filter	8
Replacing the Spark Plug	9
Servicing the Fuel Filter	9
Cleaning the Cooling Fins	10
Servicing the Muffler and Exhaust Ports	10
Adjusting the Idle Speed	10
Storage	10
Emission Control Information	10
Fuel Information	10
Exhaust Emission Control System (EM)	10
Maintenance and Warranty	11
Tampering with Emission Control System Prohibited	11
Federal and California Emission Control Warranty Statement	14
The Toro Total Coverage Guarantee	16

Introduction

Thank you for purchasing a Toro product.

All of us at Toro want you to be completely satisfied with your new product, so feel free to contact your local Authorized Service Dealer for help with service, genuine Toro parts, or other information you may require.

Whenever you contact your Authorized Service Dealer or the factory, always know the model and serial numbers of your product. These numbers will help the Service Dealer or Service Representative provide exact information about your specific product. You will find the model and serial number decal located in a unique place on the product (Fig. 2).

For your convenience, write the product model and serial numbers in the space below.

Model No: _____

Serial No. _____

Read this manual carefully to learn how to operate and maintain your product correctly. Reading this manual will help you and others avoid personal injury and damage to the product. Although Toro designs, produces and markets safe, state-of-the-art products, you are responsible for using the product properly and safely. You are also responsible for training persons who you allow to use the product about safe operation.

The Toro warning system in this manual identifies potential hazards and has special safety messages that help you and others avoid personal injury, even death. DANGER, WARNING and CAUTION are signal words used to identify the level of hazard. However, regardless of the hazard, be extremely careful.

DANGER signals an extreme hazard that will cause serious injury or death if the recommended precautions are not followed.

WARNING signals a hazard that may cause serious injury or death if the recommended precautions are not followed.

CAUTION signals a hazard that may cause minor or moderate injury if the recommended precautions are not followed.

Two other words are also used to highlight information. “Important” calls attention to special mechanical information and “Note” emphasizes general information worthy of special attention.

The left and right side of the machine is determined by standing in the normal operator’s position.

©**The Toro Company - 1999**
8111 Lyndale Ave. South
Bloomington, MN 55420-1196

All Rights Reserved
Printed in the USA

Safety

Read and understand this Operator's Manual before using the backpack blower. Be thoroughly familiar with the proper use of the backpack blower.

Never allow children to operate the backpack blower. It is not a toy. Never allow adults to operate the unit without first reading the Operator's Manual.

Become familiar with the controls and know how to stop the engine quickly.

Always use eye protection and ear protection.

Keep the area of operation clear of all persons, particularly small children, and pets.

Do not point blower nozzle in the direction of people or pets.

Never operate the backpack blower when you are fatigued.

Never operate the backpack blower without proper guards or other protective safety devices in place.

Dress properly; do not wear loose clothing or jewelry that can be caught in moving parts. Always wear substantial footwear, long pants, and a long-sleeved shirt.

Gasoline is highly flammable; handle it carefully.

- Do not smoke while handling gasoline.
- Use an approved fuel container for storing the gasoline/oil mixture.
- Do not fill the fuel tank when the engine is hot or running.
- Fill the fuel tank outdoors and only up to one-half inch from the top of the tank. Do not fill the filler neck.
- Wipe away any spilled gasoline before starting the engine.

Always be sure of your footing; keep a firm hold of the blower pipes, and walk, never run, while operating the backpack blower.

Use the correct accessories. Do not use the backpack blower for any job except that for which it is intended.

Keep all fasteners tight and be sure the backpack blower is in safe working condition. Follow the maintenance instructions in this manual.

Do not put hands or feet near or under the rotating parts. Keep clear at all times.

If the backpack blower should start to vibrate abnormally, stop the engine immediately and check for the cause. Vibration is generally a warning of trouble.

Avoid using the backpack blower near rocks, gravel, stones, and similar matter to avoid dangerous flying debris. Use the backpack blower only in daylight or good artificial light.

Do not allow bystanders in work area.

Do not operate without guard(s) in place.

Do not operate in unventilated area.

Assembly

1. Locate and identify all the components (Fig. 1)

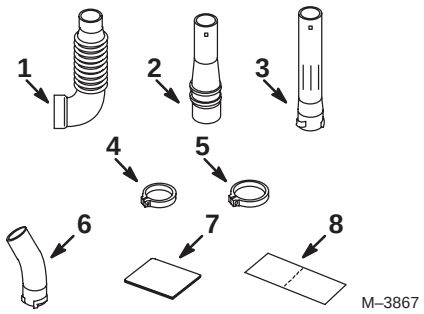

Figure 1

1. Flexible pipe
2. Swivel pipe
3. Straight pipe (x 2)
4. Band – 3.0 in
5. Band – 4.25 in
6. Bent pipe
7. Operator's manual
8. Warranty registration card

2. Using the bands, connect the flexible pipe to the blower, and the swivel pipe to the flexible pipe (Fig. 2).

3. Assemble the straight pipe and bent pipe. Then connect them to the swivel pipe (Fig. 2).

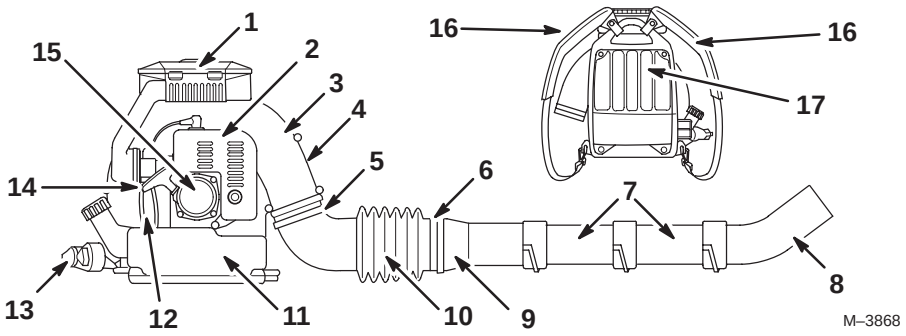

Figure 2

1. Air cleaner
2. Engine
3. Blower housing
4. Model and serial number location
5. Band – 4.25 in
6. Band – 3.0 in
7. Straight pipe
8. Bent pipe
9. Swivel pipe
10. Flexible pipe
11. Fuel tank
12. Return pipe
13. Throttle lever
14. Primer bulb
15. Recoil starter
16. Shoulder straps
17. Back pad

Before Starting

Mixing Gasoline and Oil

Your blower is powered by a two-cycle engine which requires a 50:1 mixture of gasoline and oil.

Use only clean, fresh, lead-free gasoline (including oxygenated or reformulated gasoline) with an octane rating of 87 or higher. To ensure freshness, purchase only the amount of gasoline you expect to use in 30 days. Using unleaded gasoline results in fewer combustion chamber deposits and longer spark plug life.

IMPORTANT: Do not use methanol, gasoline containing methanol, gasohol containing more than 10% ethanol, premium gasoline, or white gas. Using these fuels can damage the engine's fuel system.

IMPORTANT: Do not use automotive oil (i.e., SAE 30 or 10W30), a two-cycle oil that is not NMMA TCW III-certified, or a fuel mixed at the wrong gasoline/oil ratio. This can cause engine damage not covered under the warranty.

DANGER

POTENTIAL HAZARD

- **In certain conditions, gasoline is extremely flammable and highly explosive.**

WHAT CAN HAPPEN

- **A fire or explosion from gasoline can burn you and others and can damage property.**

HOW TO AVOID THE HAZARD

- **Fill the fuel tank outdoors, in an open area, and when the engine is cold. Wipe up any gasoline that spills.**
- **Do not fill the fuel tank completely full. Add gasoline to the fuel tank until the level is 1/4 to 1/2 inch (6 to 13 mm) below the bottom of the filler neck. This empty space in the tank allows gasoline to expand.**
- **Never smoke when handling gasoline, and stay away from an open flame or where a spark may ignite the gasoline fumes.**
- **Store gasoline in an approved container and keep it out of the reach of children.**
- **Never buy more than a 30-day supply of gasoline.**

DANGER

POTENTIAL HAZARD
- **When fueling, under certain circumstances, a static charge can develop, igniting the gasoline.**

WHAT CAN HAPPEN
- **A fire or explosion from gasoline can burn you and others and damage property.**

HOW TO AVOID THE HAZARD
- **Always place gasoline containers on the ground away from your vehicle before filling.**
- **Do not fill gasoline containers inside a vehicle or on a truck or trailer bed because interior carpets or plastic truck bed liners may insulate the container and slow the loss of any static charge.**
- **When practical, remove gasoline-powered equipment from the truck or trailer and refuel the equipment with its wheels on the round.**
- **If this is not possible, then refuel such equipment on a truck or trailer from a portable container, rather than from a gasoline dispenser nozzle.**
- **If you must use a gasoline dispenser nozzle, keep the nozzle in contact with the rim of the fuel tank or container opening at all times until fueling is complete.**

For simplicity and best engine performance, mix the contents of one 5.2–ounce bottle of Toro 50:1 Two–Cycle Oil with two gallons of fresh, unleaded regular gasoline. Leaded regular gasoline may be used if unleaded regular is not available.

Toro Two–Cycle Oil is specially formulated to provide superior lubrication, make starting easy, and prolong engine life. If Toro Two–Cycle Oil is not available, mix two gallons of gasoline and 5.2 ounces of another high grade two–cycle oil that is specially formulated for high-performance, two-cycle air-cooled engines.

Note: Failing to use the proper oil or the 50:1 gasoline-to-oil mixture ratio can result in serious engine damage.

Add the oil to fresh, unleaded gasoline according to the chart below:

50:1 Gasoline-to-Oil Ratio Mixing Chart	
Gasoline	Oil
1 gallon	2.6 ounces
1.5 gallons	3.9 ounces
2 gallons	5.2 ounces

To properly mix the gasoline and oil:

1. Pour half of the desired amount of fresh, unleaded gasoline into a clean, approved gasoline container.
2. Add the full amount of oil to the gasoline.
3. Install the cap on the gasoline container.
4. Shake the gasoline-and-oil mixture thoroughly.
5. Slowly remove the cap and add the remaining amount of gasoline.

Note: Do not mix gasoline and oil in the fuel tank. Oil at room temperature mixes easier and more thoroughly than cold oil. Oil below 32°F (0°C) requires additional mixing.

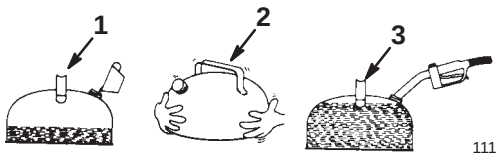

Figure 3

1. Add oil to half of the gasoline
2. Install the cap and shake the can to mix
3. Add the remaining amount of gasoline

IMPORTANT: Do not overfill the fuel tank. The gasoline/oil mix must have room to expand.

6. Replace the fuel cap securely and wipe up any spilled fuel.

Using Stabilizer/Conditioner

Use a fuel stabilizer/conditioner or oil containing stabilizer/conditioner in the machine to provide the following benefits:

- Keeps gasoline fresh during storage of 90 days or less. For longer storage, drain the fuel tank.
- Cleans the engine while it runs
- Eliminates gum-like varnish buildup in the fuel system, which causes hard starting

IMPORTANT: Do not use fuel additives containing methanol or ethanol.

Add the correct amount of gas stabilizer/conditioner to the gas or use oil formulated with a stabilizer/conditioner when mixing the gas and oil.

Note: A fuel stabilizer/conditioner is most effective when mixed with fresh gasoline. To minimize the chance of varnish deposits in the fuel system, use fuel stabilizer at all times.

Operation

WARNING

- **Never operate a backpack blower when you are fatigued.**
- **Never operate a backpack blower without proper guards or other protective safety devices in place.**

Refer to Figure 2 for the location of major backpack blower components.

Using the Throttle Lever

Before operating the backpack blower, release the knob, rotate the throttle arm to the position in Figure 4, and tighten the knob.

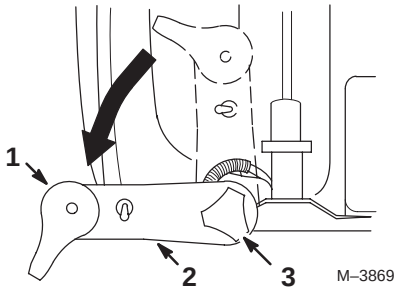

Figure 4

1. 2.

When the backpack blower is positioned on the back of the operator, the throttle lever is located on the left side of the operator (Fig. 5).

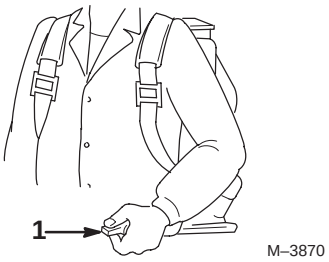

Figure 5

1. Throttle lever

The blower throttle has an idle speed position and a range of working speeds from low to high. Refer to Figure 6 for an illustration of these positions.

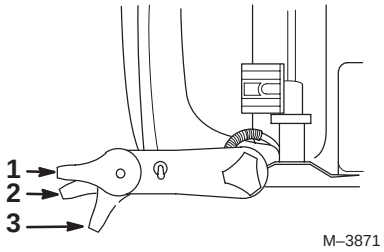

Figure 6

1. Idle speed
2. Low speed
3. High speed

Starting the Engine

1. Pump the primer bulb on the side of the carburetor until you see fuel flowing through the fuel-return line (Fig. 7).

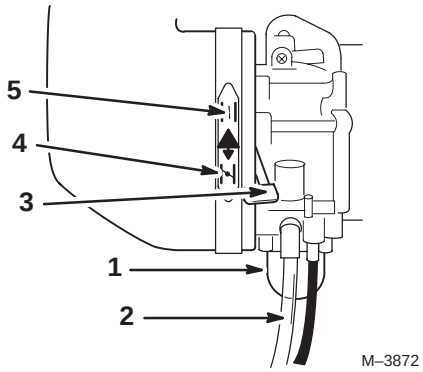

Figure 7

1. Primer bulb
2. Fuel-line return
3. Choke lever
4. Close position
5. Open position

---

2. Move the choke lever fully downward to the closed position (Fig. 8). If the engine is already warm, only a partial or open (no choke) choke setting may be required.

3. Turn the stop switch ON (Fig. 9). (Confirm that the stop switch is in the START position.)

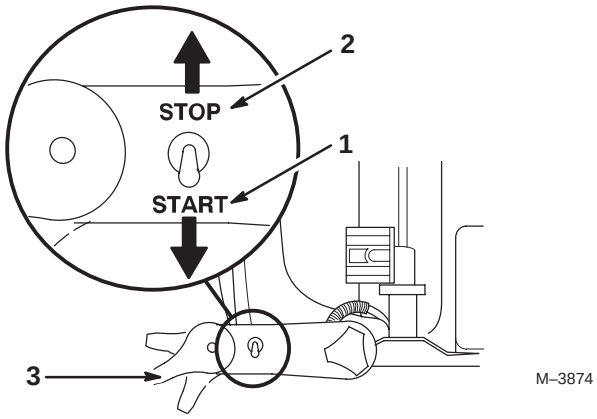

Figure 9

1. Start position
2. Stop position
3. 1/2 speed position

---

4. Set the throttle lever at 1/2 speed (Fig. 9).

5. Pull the starter grip briskly to start the engine (Fig. 10).

Note: Only short pulls are necessary. Never pull the starter cord to its fullest extension. Never let go of the starter grip until it is at the fully returned position.

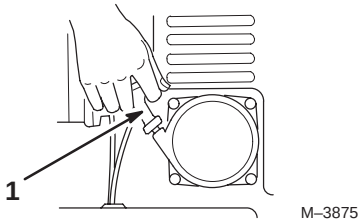

Figure 10

1. Starter grip

---

6. When the engine has started, slowly move the choke lever fully upward to the open position (Fig. 7). Allow the engine to warm up at less than 1/2 speed.

7. When the engine has warmed up, the backpack blower can be positioned on the back of the operator (Fig. 11).

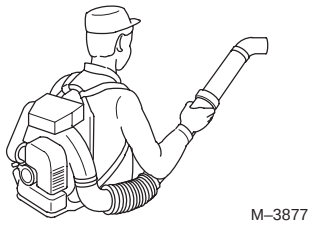

Figure 11

---

8. When the backpack blower is positioned and ready for operation, adjust the throttle to a speed required to accomplish the task.

Stopping the Engine

1. Always run the engine at idle speed for a few minutes to allow cooling before stopping.

2. To stop the engine, move the throttle control lever all the way downward to the engine idle position. Then move the stop switch to the STOP position (Fig. 9).

Maintenance

Periodic Maintenance Chart

Maintenance	Interval				
	Daily	First 20 Hours	Every 20 hours	Every 50 hours	Every 100 hours
Check and replenish fuel	●				
Check for fuel leakage	●				
Check bolts, nuts and screws for looseness and loss	●				
Clean fuel filter			●		
★ Clean air filter element			●		
Tighten bolts and nuts		●		●	
Clean spark plug and adjust electrode gap				●	
★ Remove dust and dirt from cylinder fins				●	
T Remove carbon deposits on piston head and inside cylinder				●	
T Remove carbon deposits in the exhaust pipe of muffler				●	
T Clean net of spark arrester (if equipped)				●	
T Check the sliding portion of the crankshaft, connecting rod, etc.					●
Fuel tube	Replace every 3 years.				

★ Service more frequently under dusty conditions.

T Service to be performed by an authorized Toro service dealer.

Note: The service intervals indicated are to be used as a guide. Service to be performed more frequently as necessitated by operating conditions.

CAUTION

POTENTIAL HAZARD
- **When wire is on spark plug, someone could accidentally start the engine.**

WHAT CAN HAPPEN
- **Accidental starting of engine could seriously injure you or other bystanders.**

HOW TO AVOID THE HAZARD
- **Pull wire off spark plug before you do any maintenance. Also push wire aside so it does not accidentally contact spark plug.**

Before each use, inspect the backpack blower for proper assembly and fitness of all components. Check all fasteners for correct tightness. Always inspect for fuel leaks.

DANGER

- **Do not attempt to start or operate a backpack blower that has a fuel leak. A fuel leak is a potential fire hazard that could cause a fire and personal injury.**

Servicing the Air Filter

Inspect the air filter each time the backpack blower is used, or more often in extreme conditions.

1. Remove the air filter cover. Then remove the element from the case (Fig. 12).

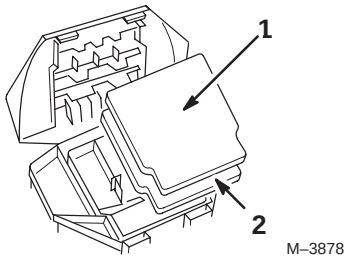

Figure 12

1. Sponge air filter
2. Felt air filter

2. Clean the felt air filter and the cover with compressed air (Fig. 13).

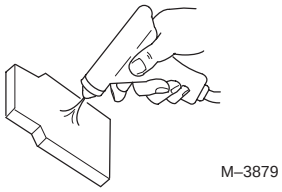

Figure 13

3. Wash the sponge air filter with a suitable cleaning solvent. Dry the sponge filter completely after washing.

Replacing the Spark Plug

Remove plug after every 50 operating hours and check its condition. Replace spark plug every 100 operating hours or every season. Use a Champion RCJ7Y spark plug or equivalent.

1. Stop engine and wait for all moving parts to stop. Pull wire off spark plug.
2. Clean around spark plug and remove plug from cylinder head.

IMPORTANT: Replace a cracked, fouled, or dirty spark plug. Do not sand blast, scrape, or clean electrodes because engine damage could result from grit entering cylinder.

3. Set air gap at 0.024 – 0.028" (Fig. 14). Install correctly gapped spark plug and gasket seal. Tighten plug firmly to 10–12 ft–lb.

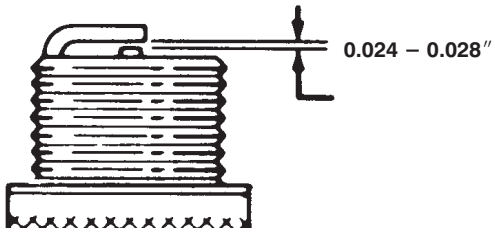

Figure 14

Servicing the Fuel Filter

Clean and inspect the fuel filter for damage after every 20 hours of use. The fuel filter is attached to the fuel pick-up tube inside the fuel tank (Fig. 15). Loosen the clamp and remove the filter (Fig. 16).

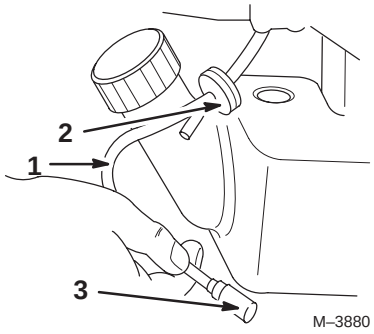

Figure 15

1. Fuel tube
2. Grommet
3. Fuel filter

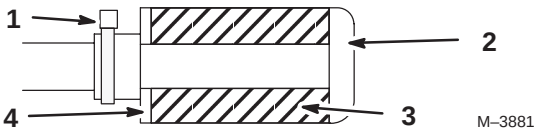

Figure 16

1. Clamp
2. Weight
3. Fuel filter
4. Washer

1. To clean the fuel filter, remove it from the fuel tube and wash it with fuel mixture.
2. Inspect and clean the fuel tank before re-installing the fuel filter. Always replace a defective fuel filter.

Cleaning the Cooling Fins

Air must pass freely through the cylinder cooling fins to prevent poor engine performance and shortened engine life. Regularly check and clean all debris from the cooling fins by removing the engine cover (Fig. 17).

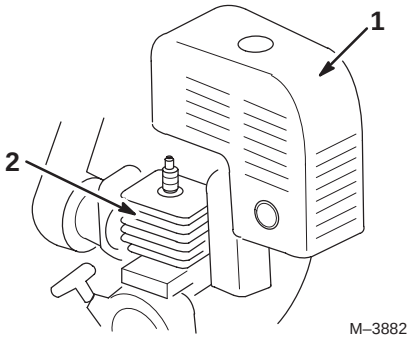

Figure 17

1. Engine cover
2. Cooling fins

Servicing the Muffler and Exhaust Ports

The muffler must be removed and serviced after each 100 hours of use. The exhaust ports must be cleaned and inspected at the same time. Contact an authorized Toro dealer for this service.

Adjusting the Idle Speed

Idle speed is the only available adjustment.

Do not tamper with the carburetor setting to increase the maximum engine speed.

If adjustment is needed, have it performed by your authorized Toro service dealer. Carburetor adjustments are made at the factory and are not adjustable without disassembling the carburetor.

Storage

For storage over 30 days, perform all regular maintenance procedures and needed repairs, then complete the following procedure:

1. If you are not using an oil formulated with a fuel stabilizer/conditioner, add a petroleum based stabilizer/conditioner to fuel in the tank. Follow mixing instructions from stabilizer manufacturer (1 oz. per gallon). **Do not use an alcohol based stabilizer (ethanol or methanol).**

Note: A fuel stabilizer/conditioner is most effective when mixed with fresh gasoline and used at all times.

IMPORTANT: Do not store stabilizer/conditioned gasoline over 90 days.

2. Run the engine to distribute conditioned fuel through the fuel system (5 minutes).
3. Stop the engine, allow it to cool, and drain the fuel tank by disconnecting the fuel-return line from the carburetor. Then gently hold the tickler lever down while pumping the primer bulb until fuel stops discharging from the fuel-return fitting.
4. Restart the engine and run it until it stops.
5. Prime the engine.
6. Start and run the engine until it will not start again. Use the primer, several times to ensure no fuel remains in primer system.
7. Dispose of fuel properly. Recycle as per local codes.
8. Remove the spark plug and insert a small amount of oil into the cylinder. Slowly pull the starter cord and bring the piston to a position closest to the spark plug hole. Re-install the spark plug.
9. Apply a thin coating of oil to all the metal surfaces and store the backpack blower in a dry place.

Emission Control Information

To protect the environment in which we all live, Kawasaki has incorporated an exhaust emission control system (EM) in compliance with acceptable regulations of the California Air Resources Board.

Fuel Information

This engine is certified to operate on unleaded regular grade gasoline only. A minimum of 87 octane of the antiknock index is recommended. The antiknock index is posted on service station pumps in the USA.

Exhaust Emission Control System (EM)

The exhaust emission control system applied to this engine consists of a carburetor and an ignition system having optimum ignition timing characteristics.

The carburetor has been calibrated to provide lean air/fuel mixture characteristics and optimum fuel economy with a suitable air cleaner and exhaust system.

Maintenance and Warranty

Proper maintenance is necessary to ensure that your engine will continue to have low emission levels. This Operator's Manual contains those maintenance recommendations for your engine. Those items identified in the Period Maintenance Chart are necessary to ensure compliance with the applicable standards.

The Toro Limited Emission Control System Warranty requires that you return your engine to an authorized Toro engine dealer for remedy under warranty. Please read the warranty carefully and keep it valid by complying with the owner's obligations it contains.

Tampering with Emission Control System Prohibited

California State law prohibits the following acts or causing thereof: (1) the removal or rendering inoperative by any person other than for purposes of maintenance, repair, or replacement, of any device or element of design incorporated into any new engine for the purposes of emission control prior to its sale or delivery to the ultimate purchaser or while it is in use, or (2) the use of the engine after such device or element of design has been removed or rendered inoperative by any person.

Among those acts presumed to constitute tampering are the following acts:

Do not tamper with the original emission system related parts:

- Carburetor and internal parts
- Spark plug
- Magneto or electronic ignition system
- Fuel filter
- Air cleaner element

Federal and California Emission Control Warranty Statement

A Two-Year Limited Warranty

Your Warranty Rights and Obligations

The U.S. Environmental Protection Agency (EPA), the California Air Resources Board (CARB), Toro, and Toro Warranty Company are pleased to explain the emission control system warranty on your 2000 and later small off-road engine (SORE). In California, new small off-road engines must be designed, built and equipped to meet the State's stringent anti-smog standards. In other states, new 1997 and later model year non-road engines must be designed, built and equipped, at the time of sale, to meet the U.S. EPA regulations for small non-road engines. The equipment engine must be free from defects in materials and workmanship, which cause it to fail to conform with U.S. EPA standards, for the first two years of engine use from the date of sale to the ultimate purchaser. Toro and Toro Warranty Company must warrant the emission control system on your engine for the period of time listed above, provided there has been no abuse, neglect, or improper maintenance of your small off-road engine.

Your emission control system may include parts such as the carburetor or fuel injection system, the ignition system, and catalytic converter. Also included may be hoses, belts, connectors, and other emission related assemblies.

Where a warrantable condition exists, Toro and Toro Warranty Company promise to repair your engine at no cost to you, including diagnosis, parts, and labor.

Manufacturer's Warranty Coverage

Toro and its affiliate, Toro Warranty Company, pursuant to an agreement between them, jointly warrant small off-road engines for two years from the date of delivery. If any emission-related part on your engine is defective in materials or workmanship, we will repair or replace the part, free of charge.

Owner Responsibilities

As the engine owner, you are responsible for the performance of the required maintenance listed in your operator's manual. We recommend that you retain all receipts covering maintenance on your equipment, but we cannot deny warranty solely for the lack of receipts or for your failure to ensure the performance of all scheduled maintenance.

Any replacement part or service that is equivalent in performance and durability may be used in non-warranty maintenance or repairs, and shall not reduce our warranty obligation.

As the engine owner, you should be aware that we may deny you warranty coverage if your engine or a part has failed due to abuse, neglect, improper maintenance, or unapproved modifications or parts.

You are responsible for presenting your equipment engine to an Authorized Service Dealer as soon as a problem exists. The warranty repairs should be completed in a reasonable amount of time, not to exceed thirty (30) days.

If you have any questions regarding your warranty rights and responsibilities or if you need a referral to a Toro Service Dealer, please feel free to contact us at:

Customer Service Department
Toro Warranty Company
8111 Lyndale Avenue South
Bloomington, MN 55420-1196
612-888-8801
800-348-2424

Warranted Parts

The warranty period begins on the date the engine or equipment is delivered to a retail purchaser. Toro and Toro Warranty Company jointly warrant to the initial owner and each subsequent purchaser that the engine is free from defects in materials and workmanship, which cause the engine to fail to conform with applicable regulations, for a period of two years.

Failures caused by abuse, neglect, or improper maintenance are not covered. The use of add-on or modified parts can be grounds for disallowing a warranty claim. We are not liable to cover failures of warranted parts caused by the use of add-on or modified parts. We are liable for damages to other engine components caused by the failure of a warranted part still under warranty. The owner is responsible for the performance of the required maintenance, as defined in the operator's manual.

Any warranted part which is not scheduled for replacement as required maintenance, or which is scheduled only for regular inspection to the effect of "repair or replace as necessary" shall be warranted for the warranty period. Any warranted part which is scheduled for replacement as required maintenance shall be warranted for the period of time up to the first scheduled replacement point for that part. Coverage under this warranty extends only to the parts listed below (the emissions system parts) to the extent that these parts were present on the engine when purchased.

1. Fuel Metering System
   - Cold start enrichment system including the choke mechanism or priming system
   - Fuel pump
   - Air fuel ratio feedback system
   - Carburetor and internal parts
   - Fuel injection system
2. Air Induction System
   - Air cleaner
   - Reed intake system
   - Intake manifold
   - Controlled hot air intake system
3. Ignition System
   - Spark plug(s)
   - Ignition coils and electronics
   - Advance/retard mechanisms
4. Catalytic Converter/Thermal Reactor System
   - Catalytic converter
   - Thermal reactor
   - Exhaust manifold
5. Air Injection System
   - Air injection system or pulse valve
   - Valves affecting distribution of air
6. Exhaust Gas Recirculation (EGR) System
   - EGR valve body and piping system connecting to the intake side of the engine
   - EGR control system
7. Particulate Controls
   - Traps, filters, precipitators, and any other device used to capture particulate emissions

8. Miscellaneous Items Used in the Above Systems
   - Vacuum, temperature, and time-sensitive valves and switches
   - Electronic controls
   - Hoses, connectors, and assemblies of same

How to Get Warranty Service

Should you feel your Toro Product requires warranty service, contact the dealer who sold you the product or any Authorized Service Dealer or Master Service Dealer. The Yellow Pages of your telephone directory is a good reference source. The dealer will either arrange service at his/her dealership or recommend another Authorized Service Dealer who may be more convenient. You may need proof of purchase (copy of registration card, sales receipt, etc.) for warranty validation. The owner shall not be charged for diagnostic labor which leads to the determination that a warranted part is defective, if the diagnostic work is performed at a warranty station.

General Conditions

Neither The Toro Company nor Toro Warranty Company is liable for indirect, incidental or consequential damages in connection with the use of the Toro Products covered by this warranty, except for damages to other engine components caused by the failure of a warranted part still under warranty. Some states do not allow exclusions of incidental or consequential damages, or limitations on how long an implied warranty lasts, so the above exclusions and limitations may not apply to you.

This warranty gives you specific legal rights, and you may also have other rights which vary from state to state.

Rev. 11/08/1999

LCE

The Toro Total Coverage Guarantee

A One-Year Limited Warranty

Conditions and Products Covered

The Toro Company and its affiliate, Toro Warranty Company, pursuant to an agreement between them, jointly promise to repair any Toro Product used for commercial, institutional, or rental purposes if defective in materials or workmanship. The following time periods apply from the date of purchase:

Products	Warranty Period
• All Products	1 year
• All Spindles	2 years parts & labor, third year parts only
• Engines* on the following:	2 years
Out Front and MidMount Zero Radius Tractors	
ProLine Mid-Size Mowers	
Groundsmaster Riding Mowers	
ProLine Hand Held Gas Products (AE and LE engines only)	
Backpack Blowers	

This warranty includes the cost of parts and labor, but you must pay transportation costs.

This warranty applies to:

- Z-Master Zero Radius Tractors
- ProLine Mid-Size Mowers
- Groundsmaster Riding Mowers
- ProLine Hand-Held Gas Products
- Backpack Blowers
- Turf Maintenance Equipment
- Debris Management Equipment

* Some engines used on Toro LCE Products are warranted by the engine manufacturer.

Instructions for Obtaining Warranty Service

Should you feel your Toro Product contains a defect in materials or workmanship, contact the dealer who sold you the product or any Authorized Service Dealer or Master Service Dealer. The Yellow Pages of your telephone directory is a good reference source. The dealer will either arrange service at his/her dealership or recommend another Authorized Service Dealer who may be more convenient. You may need proof of purchase (copy of registration card, sales receipt, etc.) for warranty validation.

If for any reason you are dissatisfied with the Service Dealer's analysis of the defect in materials or workmanship or if you need a referral to a Toro Service Dealer, please feel free to contact us at:

LCB Customer Service Department
Toro Warranty Company
8111 Lyndale Avenue South
Bloomington, MN 55420-1196
612-888-8801
888-577-7466

Owner Responsibilities

You must maintain your Toro Product by following the maintenance procedures described in the operator's manual. Such routine maintenance, whether performed by a dealer or by you, is at your expense.

Items and Conditions Not Covered

There is no other express warranty except for special emission system coverage on some products. This express warranty does not cover:

- Cost of regular maintenance service or parts, such as filters, fuel, lubricants, tune-up parts, blade sharpening, brake and clutch adjustments.
- Any product or part which has been altered or misused or required replacement or repair due to normal wear, accidents, or lack of proper maintenance.
- Repairs necessary due to improper fuel, contaminants in the fuel system, or failure to properly prepare the fuel system prior to any period of non-use over three months.
- Pickup and delivery charges.

All repairs covered by this warranty must be performed by an Authorized Toro Service Dealer using Toro approved replacment parts.

General Conditions

Repair by an Authorized Toro Service Dealer is your sole remedy under this warranty.

Neither The Toro Company nor Toro Warranty Company is liable for indirect, incidental or consequential damages in connection with the use of the Toro Products covered by this warranty, including any cost or expense of providing substitute equipment or service during reasonable periods of malfunction or non-use pending completion of repairs under this warranty. Some states do not allow exclusions of incidental or consequential damages, or limitations on how long an implied warranty lasts, so the above exclusions and limitations may not apply to you.

This warranty gives you specific legal rights, and you may also have other rights which vary from state to state.

Countries Other than the United States or Canada

Customers who have purchased Toro products exported from the United States or Canada should contact their Toro Distributor (Dealer) to obtain guarantee policies for your country, province, or state. If for any reason you are dissatisfied with your Distributor's service or have difficulty obtaining guarantee information, contact the Toro importer. If all other remedies fail, you may contact us at Toro Warranty Company.

Rev. 11/05/1999