Form No. 3438-580 Rev A

Recycler® Kit

52in, 60in, or 72in TURBO FORCE® Side Discharge Mower

Model No. 140-8016

Model No. 140-8017

Model No. 140-8018

Installation Instructions

Installation

Loose Parts

Use the chart below to verify that all parts have been shipped.

Procedure	Description	Qty.	Use
1	No parts required	–	Prepare the machine.
2	No parts required	–	Remove the existing blades.
3	No parts required	–	Remove the existing baffles.
4	Left baffle Bolt (3/8 x 1 inch) Nut (3/8 inch) Tapping bolt (3/8 x 1 inch) Flange nut (3/8 inch) Right baffle Bolt (1/2 x 1 inch) Nut (1/2 inch) Washer (1/2 inch)	1 2 2 5 5 1 1 1 1	Install the baffles (for 52-inch decks).
5	Left baffle Bolt (3/8 x 1 inch) Nut (3/8 inch) Tapping bolt (3/8 x 1 inch) Flange nut (3/8 inch) Right baffle Bolt (1/2 x 1 inch) Nut (1/2 inch) Washer (1/2 inch)	1 2 2 5 5 1 2 2 2	Install the baffles (for 60-inch decks).
6	Left baffle Bolt (3/8 x 1 inch) Nut (3/8 inch) Tapping bolt (3/8 x 1 inch) Flange nut (3/8 inch) Right baffle Bolt (1/2 x 1 inch) Nut (1/2 inch) Washer (1/2 inch)	1 2 2 5 5 1 2 2 2	Install the baffles (for 72-inch decks).

© 2020—The Toro® Company
8111 Lyndale Avenue South
Bloomington, MN 55420

Register at www.Toro.com.

CE

Original Instructions (EN)
Printed in the USA
All Rights Reserved

3438-580 A

Procedure	Description	Qty.	Use
7	Kicker Bolt (3/8 x 1 inch) Locknut (3/8 inch)	1 4 4	Install the kickers (for 72-inch decks only).

Note: Determine the left and right sides of the machine from the normal operating position.

1

Preparing the Machine

No Parts Required

Procedure

Perform the following procedure to prepare the machine for attaching the blower and finishing kit.

1. Disengage the PTO, move the motion-control levers to the NEUTRAL-LOCK position, and set the parking brake.
2. Shut off the engine, remove the key, and wait for all moving parts to stop before leaving the operating position.
3. Repair all bent or damaged areas of mower deck and replace any missing parts.
4. Clean the machine of any debris on the deck or rear part of the machine to ease installation.

2

Removing the Existing Blades

No Parts Required

Procedure

Remove the existing blades from the spindles; refer to the *Operator's Manual*.

3

Removing the Existing Baffles

No Parts Required

Procedure

Note: In the steps below, the bolts are threaded into the mower deck. Remove the nuts first before removing the bolts.

1. Remove the cam locks, washers, nut, and bolt from the adjustable flow baffle (Figure 1).
2. Remove the bolts and nuts securing the left baffle (Figure 1).
3. Remove the bolts and nuts securing the discharge baffle (Figure 1).

   Note: Retain the baffles and hardware for use when changing to side-discharging mode.

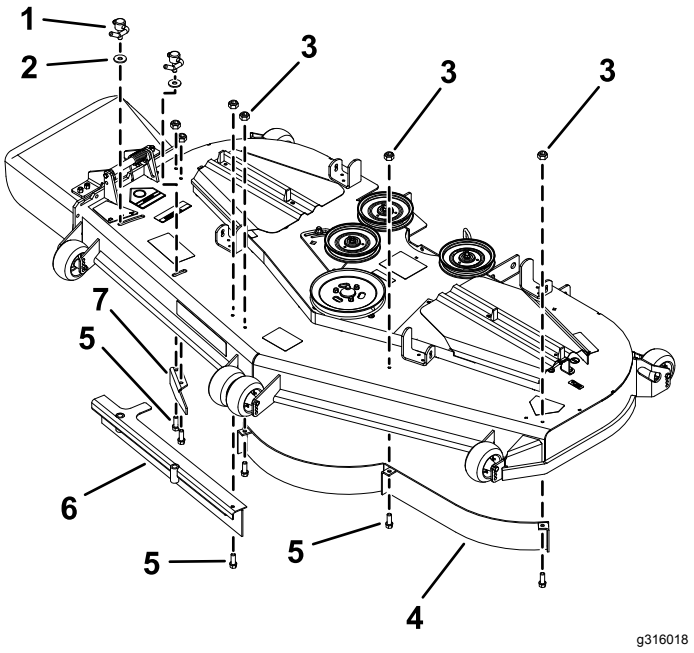

Figure 1

72-inch deck shown

1. Cam lock
2. Washer
3. Locknut
4. Left, front baffle
5. Bolt
6. Right adjustable flow baffle
7. Discharge baffle

4

Installing the Baffles

For 52-inch Decks

Parts needed for this procedure:

1	Left baffle
2	Bolt (3/8 x 1 inch)
2	Nut (3/8 inch)
5	Tapping bolt (3/8 x 1 inch)
5	Flange nut (3/8 inch)
1	Right baffle
1	Bolt (1/2 x 1 inch)
1	Nut (1/2 inch)
1	Washer (1/2 inch)

Procedure

Note: All holes exist in the mower deck for installing the new baffles.

1. Install the right baffle into the deck (Figure 2).
2. Loosely secure the right baffle to the top of the deck using 1 bolt (1/2 x 1 inch), 2 tapping bolts (3/8 x 1 inch), 1 nut (1/2 inch), 1 washer (1/2 inch), and 2 flange nuts (3/8 inch) as shown in Figure 2.
3. Loosely secure the right baffle to the rear baffle using 1 bolt (3/8 x 1 inch) and 1 nut (3/8 inch) as shown in Figure 2.
4. Install the left baffle into the deck (Figure 2).
5. Loosely secure the left baffle to the top of the deck using 3 tapping bolts (3/8 x 1 inch) and 3 flange nuts (3/8 inch) as shown in Figure 2.
6. Loosely secure the left baffle to the rear baffle using 1 bolt (3/8 x 1 inch) and 1 nut (3/8 inch) as shown in Figure 2.
7. Tighten the bolts then the nuts.

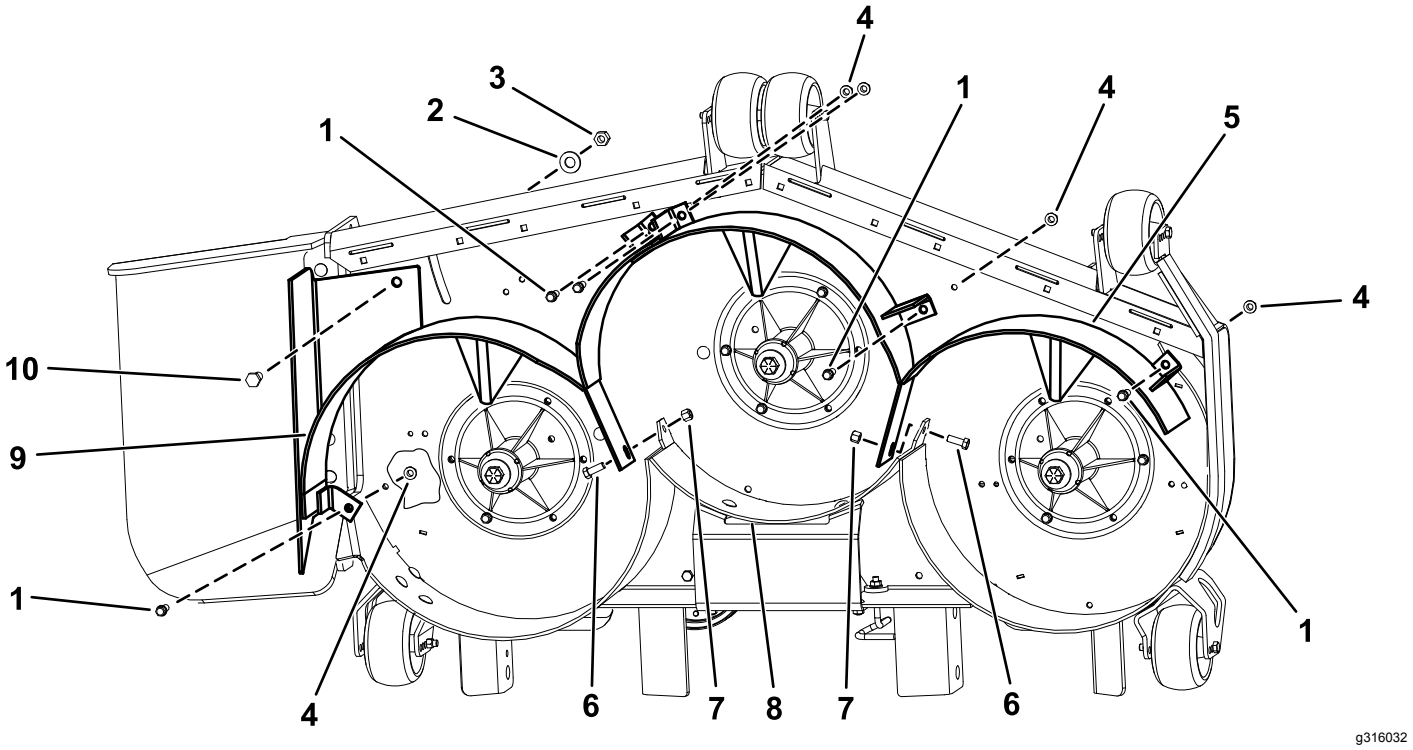

Figure 2

1. Tapping bolt (3/8 x 1 inch)
2. Washer (1/2 inch)
3. Nut (1/2 inch)
4. Flange nut (3/8 inch)
5. Left baffle
6. Bolt (3/8 x 1 inch)
7. Nut (3/8 inch)
8. Rear baffle
9. Right baffle
10. Bolt (1/2 x 1 inch)

5

Installing the Baffles

For 60-inch Decks

Parts needed for this procedure:

1	Left baffle
2	Bolt (3/8 x 1 inch)
2	Nut (3/8 inch)
5	Tapping bolt (3/8 x 1 inch)
5	Flange nut (3/8 inch)
1	Right baffle
2	Bolt (1/2 x 1 inch)
2	Nut (1/2 inch)
2	Washer (1/2 inch)

Procedure

Note: All holes exist in the mower deck for installing the new baffles.

1. Install the right baffle into the deck (Figure 3).
2. Loosely secure the right baffle to the top of the deck using 2 bolts (1/2 x 1 inch), 2 tapping bolts (3/8 x 1 inch), 2 nuts (1/2 inch), 2 washers (1/2 inch), and 2 flange nuts (3/8 inch) as shown in Figure 3.
3. Loosely secure the right baffle to the rear baffle using 1 bolt (3/8 x 1 inch) and 1 nut (3/8 inch) as shown in Figure 3.
4. Install the left baffle into the deck (Figure 3).
5. Loosely secure the left baffle to the top of the deck using 3 tapping bolts (3/8 x 1 inch) and 3 flange nuts (3/8 inch) as shown in Figure 3.
6. Loosely secure the left baffle to the rear baffle using 1 bolt (3/8 x 1 inch) and 1 nut (3/8 inch) as shown in Figure 3.
7. Tighten the bolts then the nuts.

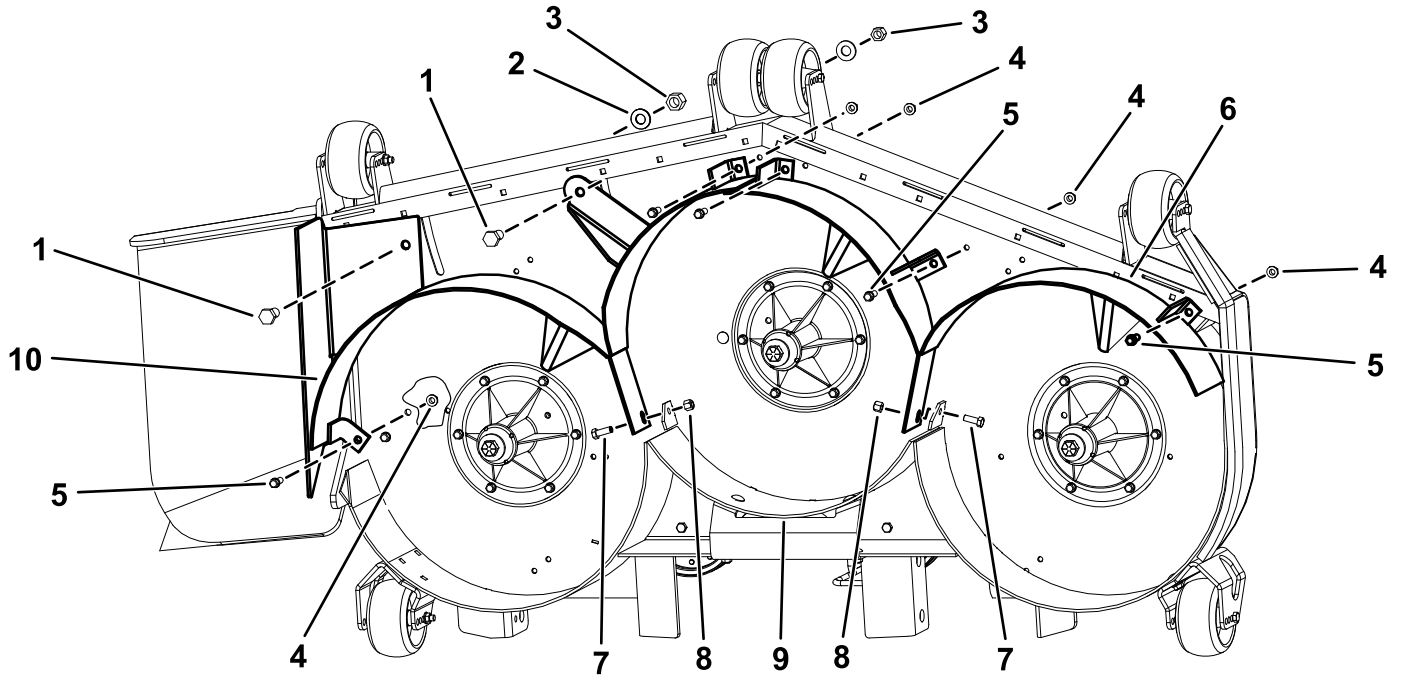

Figure 3

1. Bolt (1/2 x 1 inch)
2. Washer (1/2 inch)
3. Nut (1/2 inch)
4. Flange nut (3/8 inch)
5. Tapping bolt (3/8 x 1 inch)
6. Left baffle
7. Bolt (3/8 x 1 inch)
8. Nut (3/8 inch)
9. Rear baffle
10. Right baffle

6

Installing the Baffles

For 72-inch Decks

Parts needed for this procedure:

1	Left baffle
2	Bolt (3/8 x 1 inch)
2	Nut (3/8 inch)
5	Tapping bolt (3/8 x 1 inch)
5	Flange nut (3/8 inch)
1	Right baffle
2	Bolt (1/2 x 1 inch)
2	Nut (1/2 inch)
2	Washer (1/2 inch)

Procedure

Note: All holes exist in the mower deck for installing the new baffles.

1. Install the right baffle into the deck (Figure 4).
2. Loosely secure the right baffle to the top of the deck using 2 bolts (1/2 x 1 inch), 2 tapping bolts (3/8 x 1 inch), 2 nuts (1/2 inch), 2 washers (1/2 inch), and 2 flange nuts (3/8 inch) as shown in Figure 4.
3. Loosely secure the right baffle to the rear baffle using 1 bolt (3/8 x 1 inch) and 1 nut (3/8 inch) as shown in Figure 4.
4. Install the left baffle into the deck (Figure 4).
5. Loosely secure the left baffle to the top of the deck using 3 tapping bolts (3/8 x 1 inch) and 3 flange nuts (3/8 inch) as shown in Figure 4.
6. Loosely secure the left baffle to the rear baffle using 1 bolt (3/8 x 1 inch) and 1 nut (3/8 inch) as shown in Figure 4.
7. Tighten the bolts then the nuts.

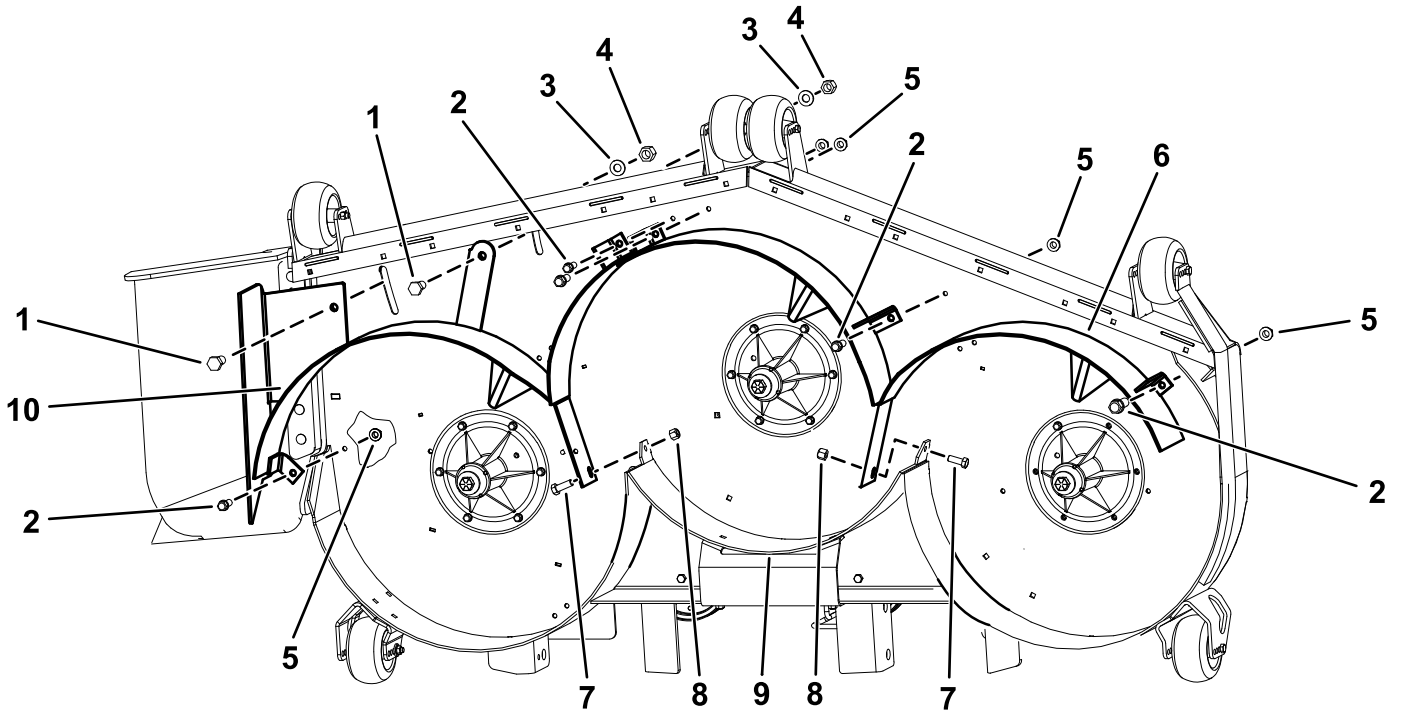

Figure 4

1. Bolt (1/2 x 1 inch)
2. Tapping bolt (3/8 x 1 inch)
3. Washer (1/2 inch)
4. Nut (1/2 inch)
5. Flange nut (3/8 inch)
6. Left baffle
7. Bolt (3/8 x 1 inch)
8. Nut (3/8 inch)
9. Rear baffle
10. Right baffle

7

Installing the Kickers

For 72-inch Deck Only

Parts needed for this procedure:

1	Kicker
4	Bolt (3/8 x 1 inch)
4	Locknut (3/8 inch)

Procedure

1. Remove the existing bolts and nuts in the holes for the kickers (Figure 5).
2. Install the new kickers to the mower deck in the locations shown in Figure 5.
3. Secure the kickers using 4 carriage bolts (5/16 x 1 inch) and 4 locknuts (5/16 inch) as shown in Figure 5.

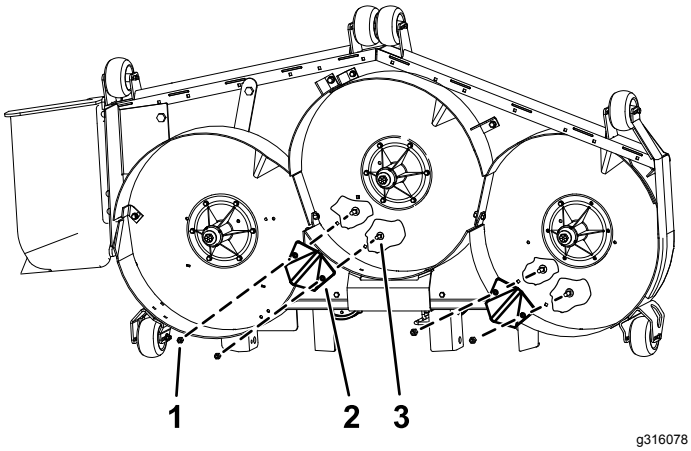

Figure 5

1. Locknut (3/8 inch)
2. Kicker
3. Bolt (3/8 x 1 inch)

Notes:



Count on it.