Form No. 3438-712 Rev A

TORO®

Count on it.

Parts Catalog

LT-F3000 Heavy-Duty Triple Turf

Flail Mower

Model No. 30659—Serial No. 406500000 and Up

Register at www.Toro.com.
Original Instructions (EN)

CE

3438-712 A

Ordering Replacement Parts

To order replacement parts, please supply the part number, the quantity, and the description of each part desired.

Understanding Reference Numbers

Each identified part in an illustration has a reference number. The reference number for a part also appears in the parts list, along with other information about the part.

This catalog uses two special reference number formats, one to indicate parts in a service assembly and another to indicate the quantity of a given part in an illustration.

Service Assembly Reference Numbers

Parts in service assemblies have reference numbers in the form a:b. The a represents the reference number of the entire service assembly and the b represents a sequential number unique to each part within the service assembly.

For example, a wheel assembly might be identified by reference number 6, the tire by 6:1, the valve by 6:2, and the wheel by 6:3. When you order the assembly identified by reference number 6, you receive all parts identified by reference numbers 6:1,6:2, and 6:3. However, you may also order any part individually. Reference numbers of this type appear in illustration and in parts lists.

Reference Numbers Indicating Quantity

In an illustration, if a reference number indicates more than one part, the reference number has the form nX y. The n represents the quantity of the part, the X is the multiplication symbol, and the y represents the reference number.

For example, in an illustration, the reference number 2X 37 means that two of the parts identified by reference number 37 are indicated.

Contents

Chassis Assembly . . . 6
Rear Axle Assembly . . . 8
Front Arm Assembly . . . 10
Center Arm Assembly . . . 12
Engine and Muffler Assembly . . . 14
Radiator and Oil Cooler Assembly . . . 16
Seat Pan Assembly . . . 18
Seat Assembly No. 134-0260 . . . 20
Steering Column Assembly No. 111-6756 . . . 22
Engine Cover Assembly . . . 24
Subsystem Hydraulic Manifold Assembly . . . 26
Valve Control Assembly . . . 28
Loom Kit Assembly . . . 30
Control Arm Assembly . . . 32
Control Pedal Assembly . . . 34
Cutter Component Assembly . . . 36
Flail Cutterhead Assembly No. 111-9515 . . . 38
Center Head HOC Adjuster Assembly . . . 40
Front Head HOC Adjuster Assembly No. 111-9519 . . . 42
Fuel Tank and Storage Pod Assembly . . . 44
Roll-Over Protection System Assembly . . . 46
Hydraulic Oil Tank Assembly . . . 48
Hydraulic Pump Assembly . . . 50
Damper Kit Assembly No. 111-9548 . . . 52
Hydraulic Pump Assembly No. 111-8723 . . . 54
Hose Kit Assembly 111-8449 . . . 56
Hose Kit Assembly 111-8448 . . . 58
Lift Hydraulic Hose Routing Assembly . . . 60
Filter Assembly . . . 62
Hydraulic Manifold Assembly . . . 64
Cutter Manifold Assembly . . . 66
Manifold Hydraulic Assembly . . . 68
Crankcase Assembly . . . 70
Oil Pan Assembly . . . 71
Cylinder Head Assembly . . . 72
Gear Case and Oil Filter Cartridge Assembly . . . 73
Cylinder Head Cover Assembly . . . 74
Oil Dipstick and Guide Assembly . . . 75
Main Bearing Case Assembly . . . 76
Cam Shaft and Idle Gear Assembly . . . 77
Piston and Crankshaft Assembly . . . 78
Flywheel Assembly . . . 79
Fuel Camshaft and Governor Shaft Assembly . . . 80
Idle Apparatus and Stop Solenoid Assembly . . . 81
Injection Pump and Fuel Pump Assembly . . . 82
Governor Assembly . . . 83
Speed Control Plate Assembly . . . 84
Nozzle Holder and Glow Plug Assembly . . . 85
Nozzle Holder Assembly . . . 86
Alternator, Pulley and Fan Assembly . . . 87
Alternator Components Assembly No. 121-3811 . . . 88
Starter Installation Assembly . . . 89
Starter Component Part Assembly No. 111-7496 . . . 90
Water Flange and Thermostat Assembly . . . 91

© 2020—The Toro® Company

8111 Lyndale Avenue South
Bloomington, MN 55420

Contact us at www.Toro.com.
Printed in the USA.

All Rights Reserved

Contents (continued)

Water Pump and Water Pipe Assembly 92
Reserve Tank Assembly 93
Valve and Rocker Arm Assembly 94
Inlet and Exhaust Manifold Assembly 95
Muffler Assembly 96
Turbo Charger Assembly 97
Oil Pipe (Turbo Charger) Assembly 98
Oil Cooler Assembly 99
Miscellaneous Engine Parts 100
Attachments and Accessories 101

Chassis Assembly

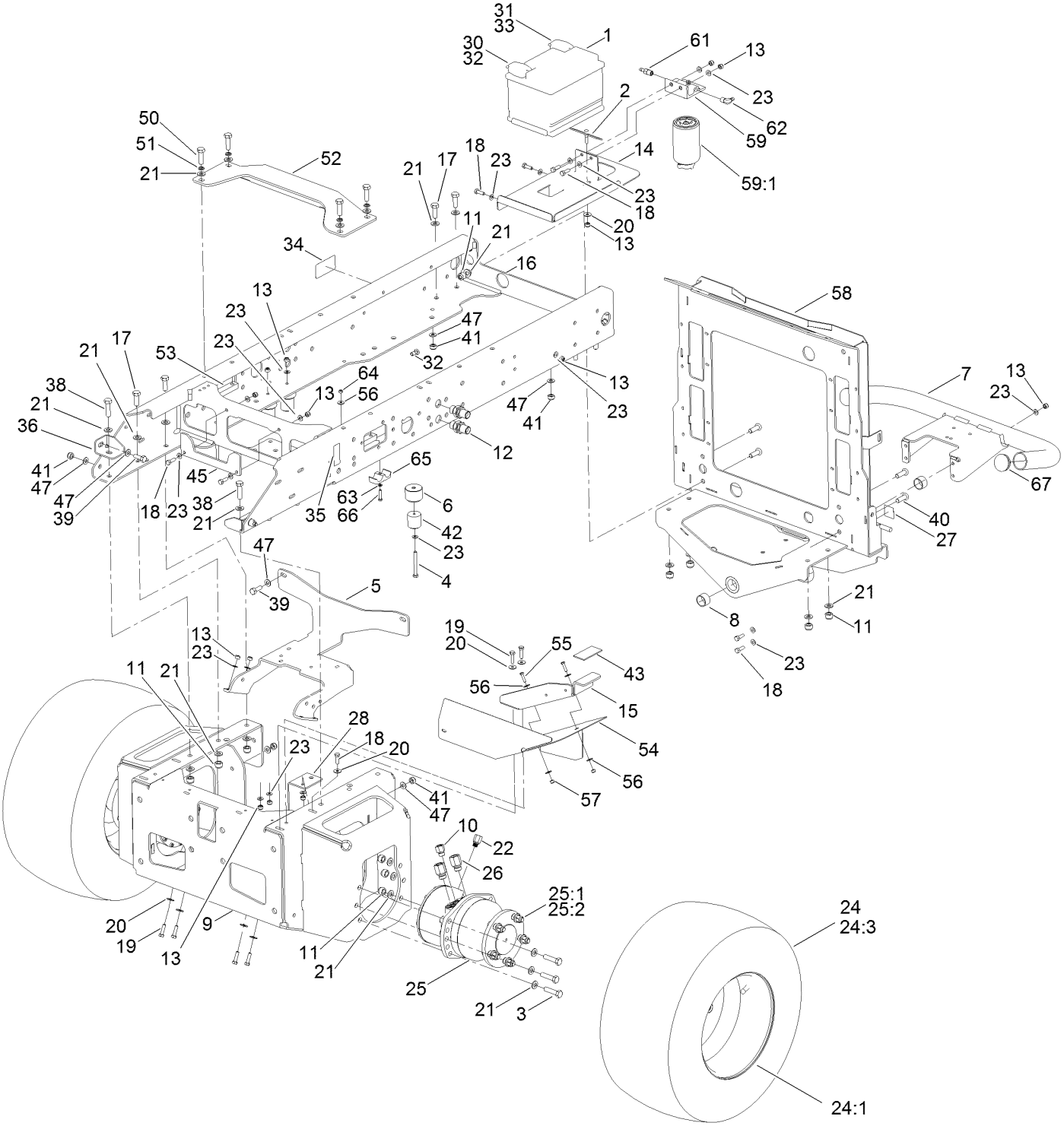

Chassis Assembly (continued)

Ref.	Part Number	Qty.	Description
1	70-09-015	1	Battery
2	70-01-340	1	Retainer-Battery
3	09552	12	Screw-HH
4	ZBH1H075U	4	Bolt
5	111-6791-03	1	Bracket-Manifold, Cutter
6	111-5305	4	Bump-Stop
7	134-2173-03	1	Bumper Bar ASM
8	65-07-051	2	Bushing
9	111-2105-03	1	Chassis-Front
10	111-3509	2	Adaptor
11	ZNN1L000U	26	Nut-Nyloc
12	111-9109	2	Fitting-Straight
13	09441	22	Nut-Hex, NI
14	111-9658-03	1	Mount-Battery
15	111-3217-03	1	Support-Platform, Front (LH)
16	111-8020-03	1	Chassis-Centre
17	ZDH1L035U	8	Screw-HH
18	03162	11	Screw-HH
19	09369	6	Screw-HH
20	09267	8	Washer-Plain
21	HY09485	52	Washer-Plain
22	111-3538	2	Adaptor
23	09475	35	Washer
24	111-6878	2	Wheel ASM
24:1	111-6879	1	Rim-Wheel
24:2	74-07-012	1	Tube-Inner ●
24:3	74-07-027	1	Tire
25	134-3968	2	Motor-Wheel, Front
25:1	111-7059	5	Stud-Wheel
25:2	74-07-016	5	Nut
25:99	134-3982	1	Kit-Seal
26	111-3529	4	Adaptor
27	70-13-072	1	Decal
28	111-9126-03	1	Bracket-Valve, Mounting
30	70-09-171	1	Terminal-Positive
31	70-09-172	1	Terminal-Negative
32	111-3690	1	Cable-Battery, Positive
33	70-09-170	1	Cable-Battery, Negative
34	950889	1	Decal-Warning
35	111-3901	1	Decal-Transmission, Oil
36	111-7092-03	2	Bracket-Chassis, Universal
38	ZBH1L045U	2	Screw-HH
39	09392	4	Screw-HH
40	09419	4	Screw-Soc, HD
41	ZNN1J000U	6	Nut-Hex, NI
42	61-07-003	4	Buffer-Rubber
43	HY910808	1	Strip-Neoprene
45	111-5538-03	1	Location-Plate
47	ZWQ1J000U	10	Washer-Plain
50	63-11-010	4	Bolt-HH
51	09599	4	Washer-Lock
52	111-7065-03	1	Brace
53	111-7094	2	Brace-Chassis
54	111-7252-03	1	Deflector-Grass, Cutter (LH)
55	09364	2	Screw-HH
56	09262	5	Washer
57	09544	2	Nut-Nyloc
58	111-8460-03	1	Chassis-Rear
59	110-9044	1	Separator-Filter
59:1	110-9049	1	Filter-Spin On
61	353-783	1	Fitting-STR
62	353-781	1	Fitting-HYD, 90
63	09472	1	Washer-Plain ●
64	09438	1	Nut-Nyloc ●
65	56-7974	1	Clamp-Tube ●
66	09547	1	Screw-HH ●
67	994856	2	Insert-Round
99	110-6146	2	Hose-Fuel ●
99	117-0298	1	Hose-Fuel ●
99	2412-80	2	Clamp-Hose ●
99	70-09-081	2	Tubing ●
99	92-2379	4	Clamp-Hose ●

● Not illustrated

Rear Axle Assembly

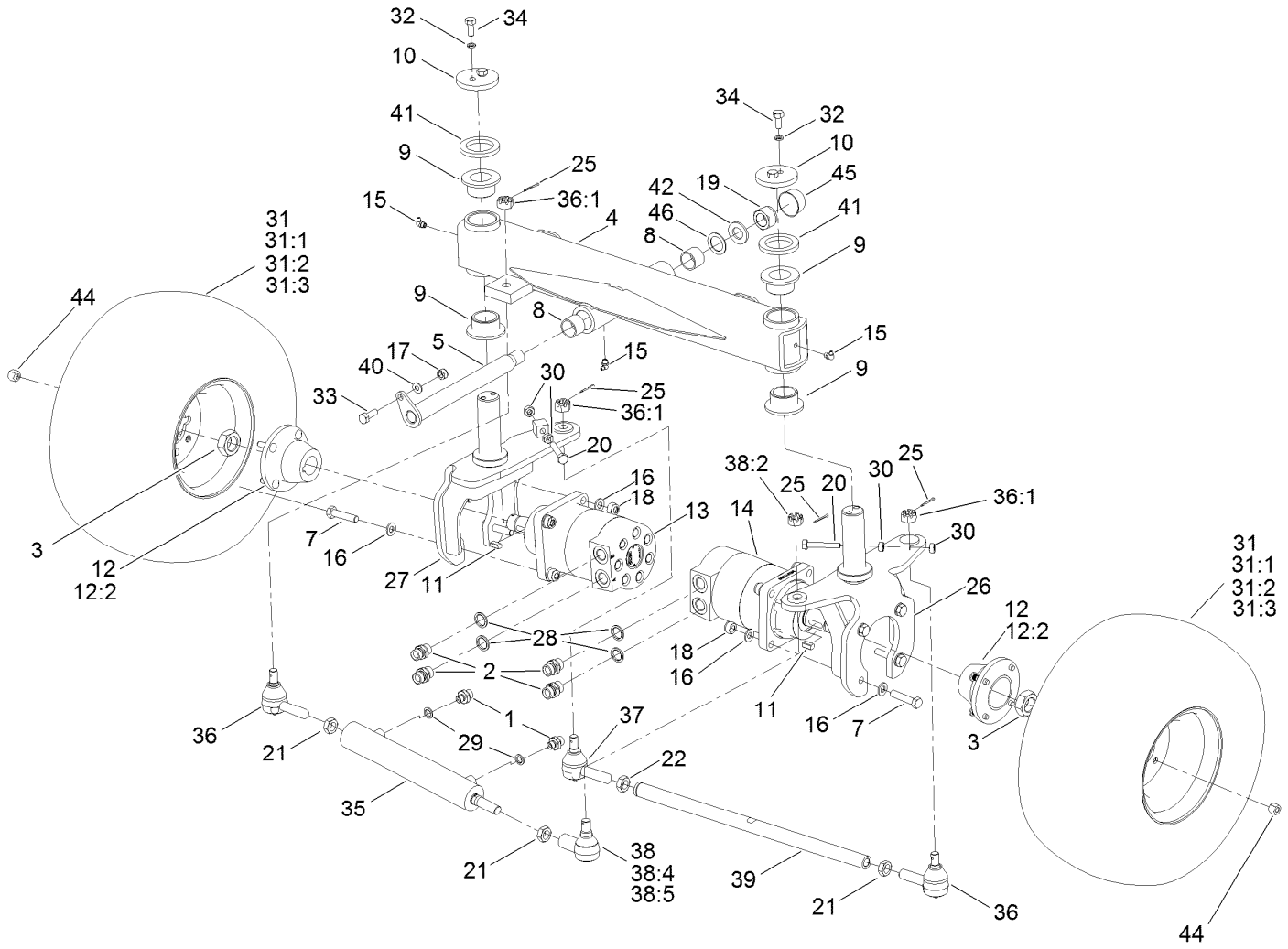

Rear Axle Assembly (continued)

Ref.	Part Number	Qty.	Description
1	50-06-009	2	Adaptor-BSP
2	10-06-078	4	Adaptor-BSPP
3	107-9319	2	Nut-Hex
4	134-0295-03	1	Axle-Rear
5	111-3265	1	Pin-Axle
7	ZBH1L055U	8	Bolt
8	70-05-031	2	Bushing
9	134-0253	4	Bushing-Flange
10	70-01-197	2	Cap-Washer
11	117-5198	2	Key-Square
12	111-9238-03	2	Hub, Motor-Rear
12:2	65-07-019	4	Stud-Wheel ●
13	111-8431	1	Motor-Wheel, Rear (LH)
13:1	115-4061	1	Seal Kit ●
14	111-8432	1	Motor-Wheel, Rear (RH)
14:1	115-4061	1	Seal Kit ●
15	63-07-027	3	Zerk-Grease, BSP (90 DEG)
16	HY09485	16	Washer-Plain
17	ZNN1J000U	1	Nut-Hex, NI
18	09650	8	Nut-Hex, Nyloc
19	ZNN1X000U	1	Nut-Hex, Nyloc
20	ZDH1J060U	2	Setscrew-HH
21	84-5300	3	Nut-Jam
22	110-5337	1	Nut-Jam
25	70-11-005	4	Pin-Split
26	134-2305-03	1	Rear Yoke RH
27	134-2304-03	1	Rear Yoke LH
28	10-06-032	4	Seal-Dowty
29	10-06-030	2	Seal-Dowty
30	09449	4	Nut
31	111-6876	2	Wheel ASM
31:1	111-6877	1	Rim-Wheel
31:2	72-07-068	1	Tube-Inner ●
31:3	924803	1	Tire
32	09480	4	Washer-Lock
33	09392	1	Screw-HH
34	09395	4	Screw-HH
35	134-0292	1	Steering Cylinder ASM
35:99	111-9939	1	Seal Kit ●
36	71-4740-03	2	RH Tie Rod End ASM
36:1		1	End-Rod, Tie (RH) ■
36:1:1	105-7941	1	Nut-Hex, Slotted
36:1:2	105-7835	1	Seal
36:1:3	302-5	1	Fitting-Grease
37	2411-46-03	1	LH Tie Rod ASM
37:1		1	End-Rod, Tie (LH) ■
37:1:1	302-5	1	Fitting-Grease
37:1:2	105-7835	1	Seal
37:1:3	105-7941	1	Nut-Hex, Slotted
38	107-2553	1	Rod End ASM
38:2	32136-2	1	Nut-SHH
38:4	106-6896	1	Seal
38:5	302-5	1	Fitting-Grease
39	111-7924-03	1	Rod-Tie
40	ZWQ1J000U	1	Washer-Plain
41	70-07-149	2	Washer-Felt
42	09555	1	Washer
44	65-07-009	8	Nut-Wheel, Dome
45	10-11-100	1	Cap-Nut
46	09298	1	Washer

● Not illustrated

■ Not serviced separately

Front Arm Assembly

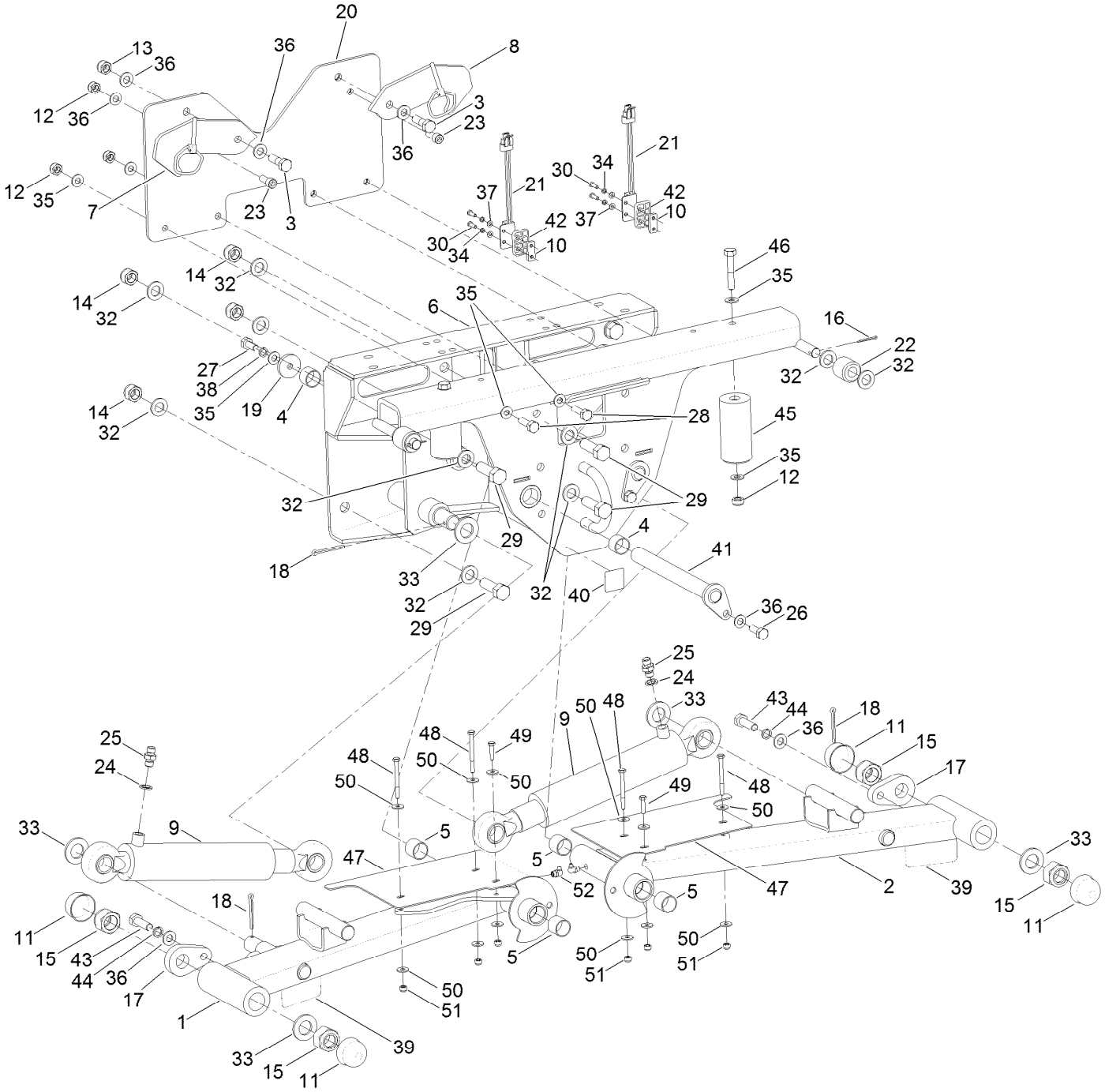

Front Arm Assembly (continued)

Ref.	Part Number	Qty.	Description
1	111-1390-03	1	Arm-Front, RH
2	111-4100-03	1	Arm-Front, LH
3	63-11-010	2	Bolt-HH
4	74-07-028	4	Bushing
5	876066	4	Bushing
6	111-8096-03	1	Frame-Pivot, Arm
7	111-7921-01	1	Plate-Latch, RH
8	111-7922-01	1	Plate-Latch, LH
9	111-1998	2	HYD Lift Cylinder ASM
9:1	111-2561	2	Fitting-Grease ●
9:2	111-3471	1	Seal Kit ●
10	111-3336	2	Bar-Switch, Proximity
11	10-11-100	4	Cap-Nut
12	ZNN1J000U	10	Nut-Hex, NI
13	09650	2	Nut-Hex, Nyloc
14	09456	8	Nut
15	ZNN1X000U	4	Nut-Hex, Nyloc
16	74-11-002	2	Pin-Split
17	63-01-185W	2	Retainer-Pin
18	74-11-001	4	Pin
19	111-3366	2	Plate-Retaining, Bush
20	111-4093-03	1	Mount-Latch, Plate
21	105-0023	2	Switch-Proximity
22	922112	2	Roller
23	ZCS1J025U	2	Screw-HSH
24	10-06-030	2	Seal-Dowty
25	10-06-085	2	Adaptor
26	09392	2	Screw-HH
27	09395	2	Screw-HH
28	09394	4	Bolt
29	ZDH1P050U	8	Screw-HH
30	ZDH1E016U	4	Screw-HH
32	09491	20	Washer-Plain
33	09555	8	Washer
34	09644	4	Washer-Spring
35	ZWQ1J000U	20	Washer-Plain
36	HY09485	6	Washer-Plain
37	09470	4	Washer
38	09480	2	Washer-Lock
39	70-13-077	2	Decal-Danger
40	70-13-072	1	Decal
41	111-3248	2	Pin-Pivot, Front Arm
42	111-3676	2	Spacer-Switch, Proximity
43	ZDH1L040U	2	Screw-HH
44	09599	2	Washer-Lock
45	111-4157	2	Stop-Bump
46	09397	2	Bolt
47	111-6822-03	2	Deflector-Arm, Mounted
48	09703	4	Bolt-HH
49	09364	2	Screw-HH
50	09262	12	Washer
51	09544	6	Nut-Nyloc
52	63-07-027	2	Zerk-Grease, BSP (90 DEG)

● Not illustrated

Center Arm Assembly

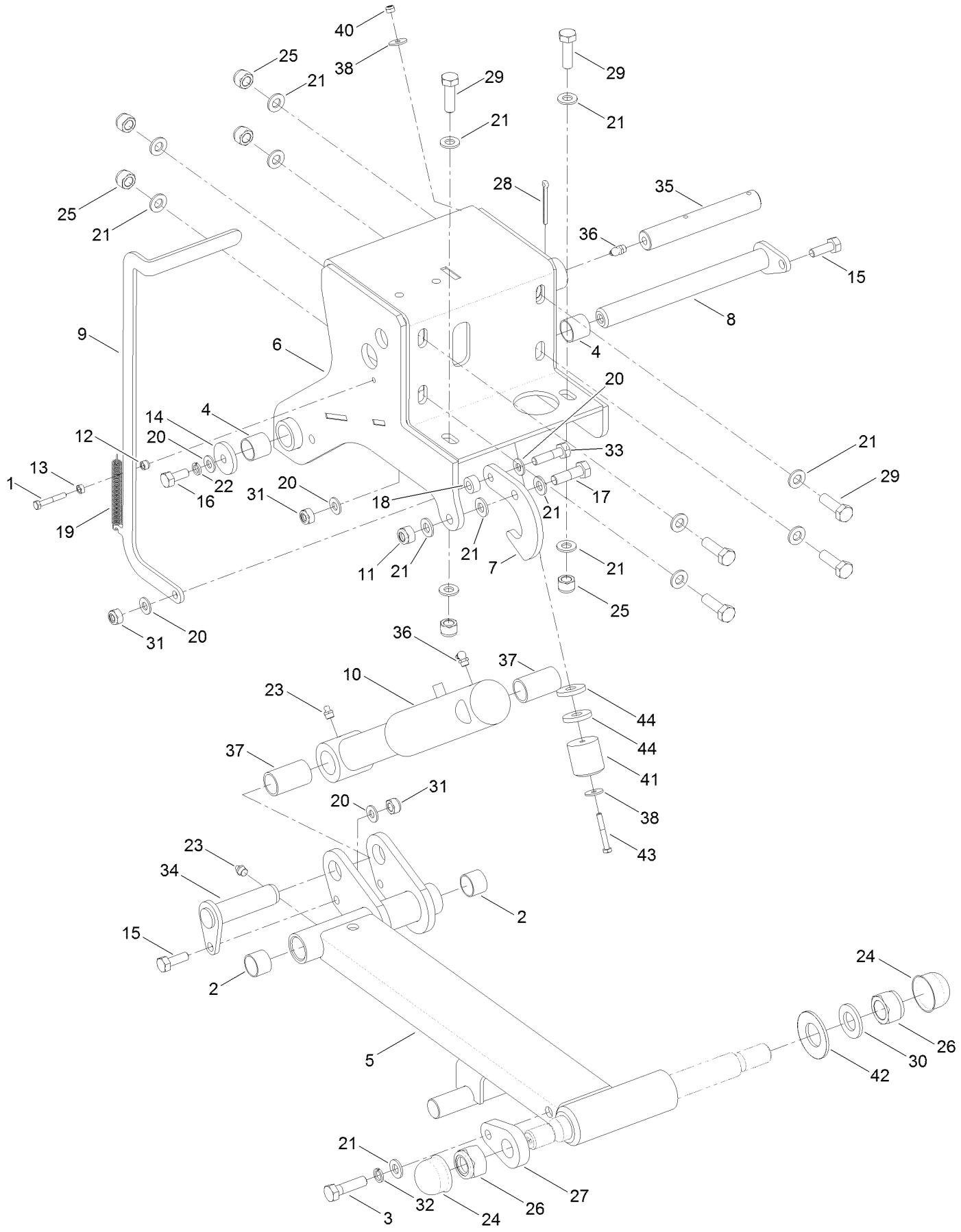

Center Arm Assembly (continued)

Ref.	Part Number	Qty.	Description
1	ZBH1F040U	1	Screw-HH
2	74-07-028	2	Bushing
3	ZBH1L045U	1	Screw-HH
4	876066	2	Bushing
5	111-5158-03	1	Center Arm ASM
6	111-5190-03	1	Center Arm Mount ASM
7	111-3099-01	1	Latch-Head, Center
8	111-3248	1	Pin-Pivot, Front Arm
9	111-3122-01	1	Handle-Head, Center
10	910109W	1	Cylinder-Lift
10:99	50-06-013	1	Seal Kit ●
11	09650	1	Nut-Hex, Nyloc
12	09544	1	Nut-Nyloc
13	09437	1	Nut
14	111-3366	1	Plate-Retaining, Bush
15	09392	2	Screw-HH
16	09395	1	Screw-HH
17	63-11-010	1	Bolt-HH
18	111-3457	1	Spacer-Latch, Center Head
19	111-3329	1	Spring-Latch, Center Head
20	ZWQ1J000U	5	Washer-Plain
21	HY09485	16	Washer-Plain

Ref.	Part Number	Qty.	Description
22	09480	1	Washer-Lock
23	10-11-017	2	Fitting-Straight
24	10-11-100	2	Cap-Nut
25	ZNN1L000U	6	Nut-Nyloc
26	ZNN1X000U	2	Nut-Hex, Nyloc
27	63-01-185W	1	Retainer-Pin
28	74-11-003	1	Pin-Split
29	ZDH1L040U	6	Screw-HH
30	09555	1	Washer
31	ZNN1J000U	3	Nut-Hex, NI
32	09599	1	Washer-Lock
33	09611	1	Bolt-HH
34	74-05-108	1	Pin-Wing, Arm
35	111-5212	1	Pin-Plain
36	63-07-027	2	Zerk-Grease, BSP (90 DEG)
37	25-07-007	2	Bushing-Tension
38	09263	2	Washer
40	09438	1	Nut-Nyloc
41	61-07-003	1	Buffer-Rubber
42	767815	1	Washer-Belleville
43	ZDH1F050U	1	Setscrew
44	63-01-115	2	Washer

● Not illustrated

Engine and Muffler Assembly

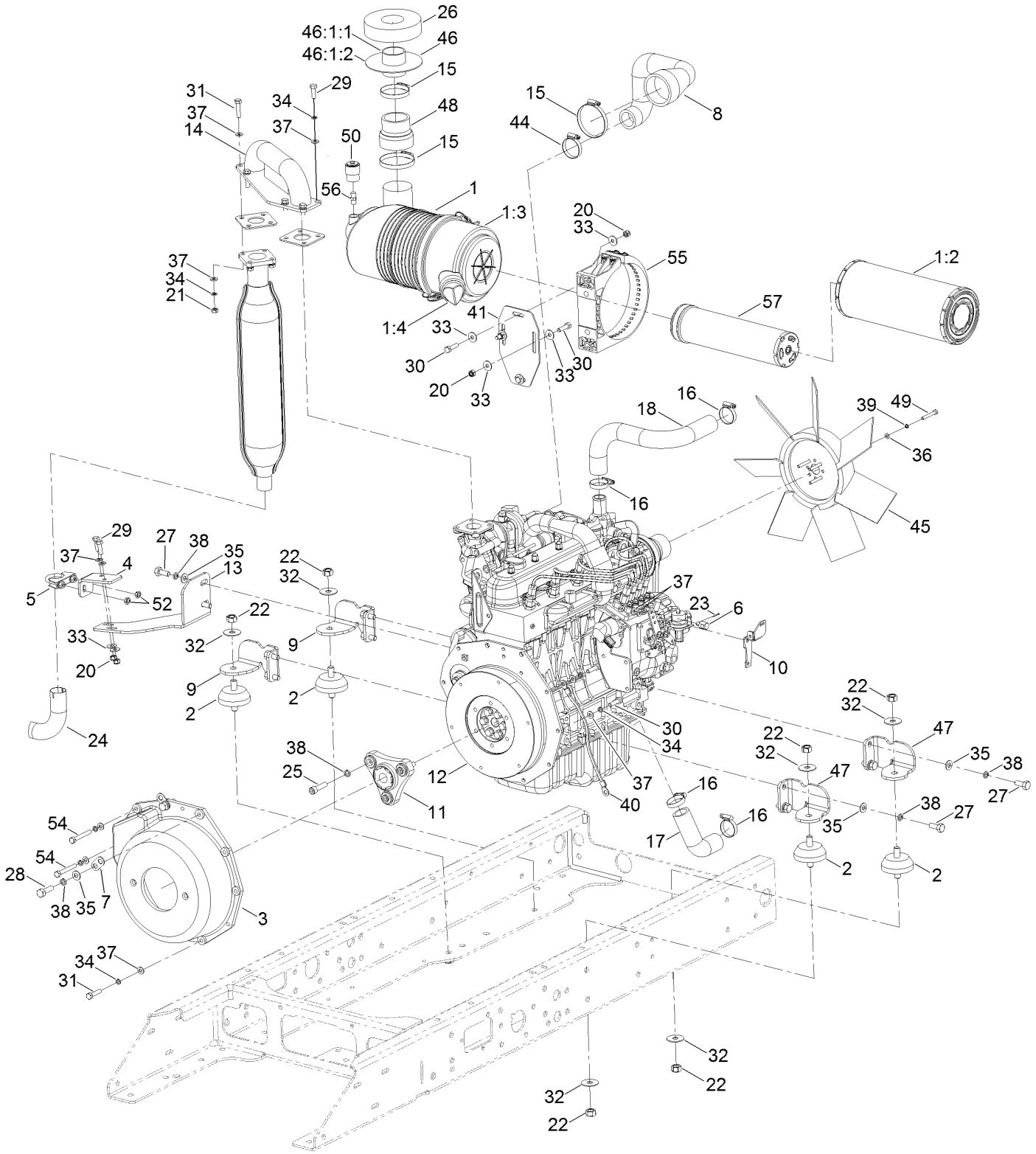

Engine and Muffler Assembly (continued)

Ref.	Part Number	Qty.	Description
1	110-8917	1	Air Cleaner ASM
1:2	108-3812	1	Filter-Air
1:3	93-5986	1	Cover ASM
1:4	87-9400	1	Valve-Vacuator
1:5	285-17	1	Plug-Pipe ●
2	910816	4	Isomount-Engine
3	922851	1	Housing-Bell
4	111-9825-03	1	Bracket-Exhaust, Lower
5	111-9717	1	Clamp-Exhaust
6	111-3298	1	Pivot-Throttle, Boss
7	74-01-327	2	Bracket-Loom, Tie
8	111-8478	1	Hose-Inlet, Turbo
9	111-3043-03	2	Bracket-Mount, Engine
10	111-3299-03	1	Bracket-Throttle
11	111-2556	1	Coupling
12	111-7496	1	Engine-Kubota
13	111-9824-03	1	Bracket-Exhaust, Lower
14	111-8413	1	Flange, Exhaust
15	65-07-042	3	Clip-Hose
16	924438	4	Clamp-Hose
17	111-8256	1	Hose-Radiator, Bottom
18	910921	1	Hose-Top
20	09441	6	Nut-Hex, NI
21	ZNH1H000U	4	Nut-Hex
22	09231	8	Nut-Hex
23	70-07-107	1	Pin-Split
24	940213	1	Tail Pipe-Exhaust
25	111-3806	3	Screw-HSH
26	111-9177	1	Pad-Intake, Air
27	50-11-005	10	Screw-HH
28	111-0597	2	Screw-HH
29	03162	6	Screw-HH
30	09369	2	Screw-HH
31	ZDH1H035U	8	Screw-HH
32	09283	8	Washer
33	09267	10	Washer-Plain
34	03469	16	Washer-Spring
35	ZWQ1J000U	12	Washer-Plain
36	ZWP1F000U	4	Washer-Plain
37	ZWP1H000U	24	Washer-Plain
38	09480	15	Washer-Lock
39	09474	4	Washer-Spring
40	70-09-023	1	Cable-Earth
41	111-8416-03	1	Bracket Air Cleaner
44	924437	1	Clamp-Hose
45	110-8852	1	Fan-Cooling
46	111-9176-03	1	Air Intake ASM
46:1		1	Air Intake ASM ● ■
46:1:1	111-9174	1	Tube, Intake-Air
46:1:2	111-9175	1	Plate, Intake-Air
47	111-7141-03	2	Bracket-Mount, Engine
48	111-9156	1	Reducer, Intake-Air
49	09568	4	Bolt-HH
50	93-9164	1	Indicator-Mini
52	ZNB1H000U	2	Nut
54	09371	2	Bolt
55	111-5017	1	Strap-Cleaner, Air
56	94-1416	1	Adapter-Indicator
57	108-3813	1	Element-Safety, Air Cleaner

● Not illustrated

■ Not serviced separately

Radiator and Oil Cooler Assembly

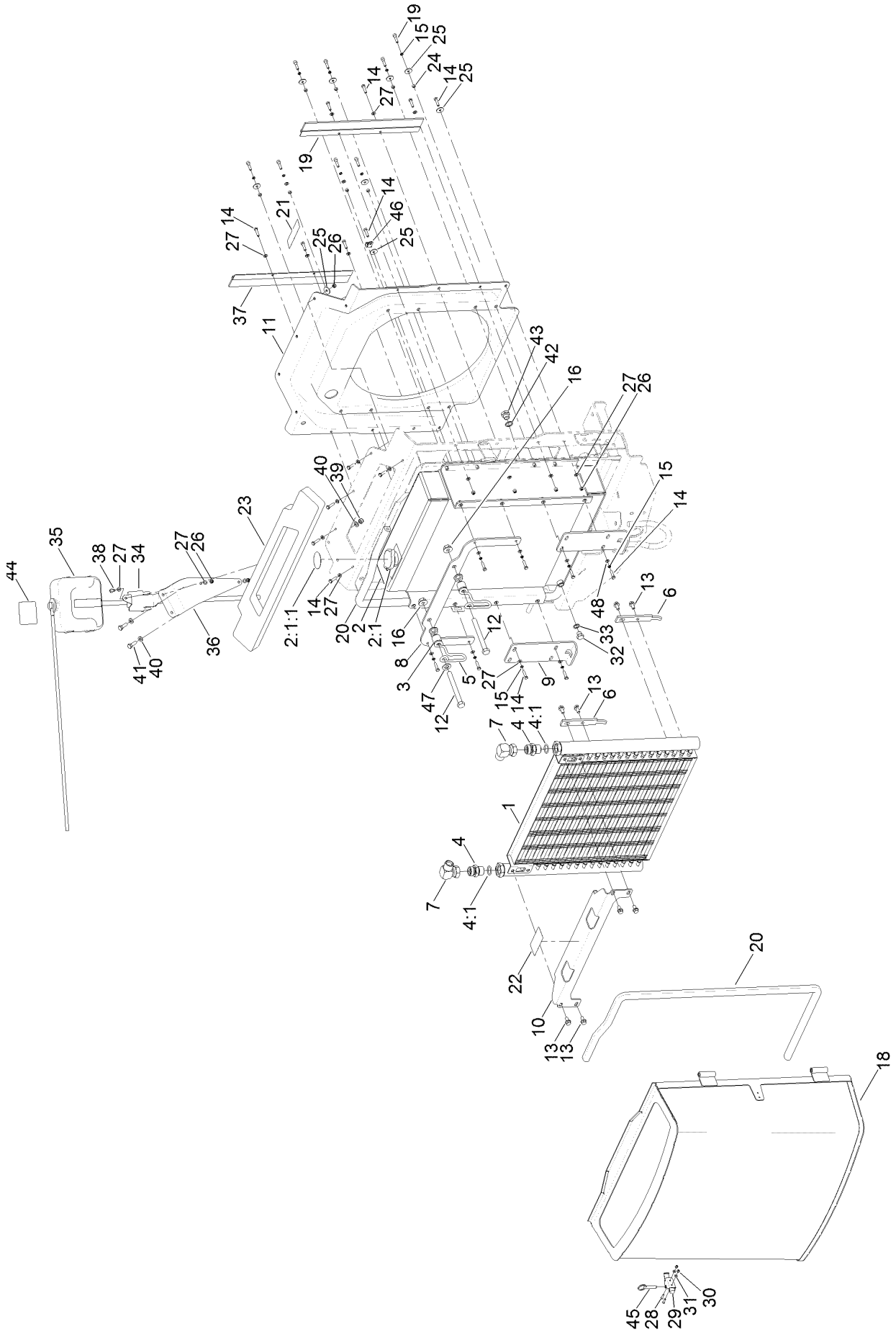

Radiator and Oil Cooler Assembly (continued)

Ref.	Part Number	Qty.	Description
1	110-0485	1	Cooler-Oil
2	111-7999	1	Radiator
2:1	111-9475	1	Cap-Radiator
2:1:1	117-3276	1	Decal-Danger ●
3	111-9283	2	Spacer-Cooler, Oil (Latch)
4	70-06-050	2	Adaptor-Boss
4:1	70-06-168	1	Seal-O Ring
5	104-5429	2	Clamp-Form, Wire
6	104-5460-03	2	Plate-Mount, Oil Cooler
7	111-4443	2	Elbow-BSP
8	111-8011-03	1	Plate-Catch
9	111-8226-03	2	Bracket-Cooler, Oil
10	111-8440-03	1	Plate-Latch, Oil Cooler
11	134-2745	1	Fan Cowl
12	325-38	2	Screw-HH
13	3234-14	8	Screw-HHF
14	09364	21	Screw-HH
15	09474	16	Washer-Spring
16	32128-49	4	Nut-HHF
18	111-8470-03	1	Screen-Rear
19	ZCS1F025U	8	Screw-HSH
20	115-4360	2	Seal-Bulb
21	111-3902	1	Decal-Engine, Fan/Radiator
22	950889	1	Decal-Warning
23	111-9460	1	Seal-Duct
24	111-9157	8	Bush
25	09262	17	Washer
26	09438	15	Nut-Nyloc
27	09472	25	Washer-Plain
28	111-3473	2	Screw-Button
29	115-1554	1	Latch-Draw
30	09657	2	Nut-Insert, NI
31	09658	2	Washer
32	30-06-200	1	Plug-HYD
33	111-3925	1	Washer-Fiber
34	108-9930-03	1	Bracket-Bottle
35	111-7452	1	Tank-Reserve, Coolant
36	111-9079-03	1	Plate-Bottle, Overflow
37	111-9547	2	Brush Strip
38	09363	2	Screw-HH
39	09441	2	Nut-Hex, NI
40	09475	4	Washer
41	03162	2	Screw-HH
42	111-9626	1	Washer-Fiber
43	50-06-207	1	Plug
44	111-9647	1	Decal
45	115-1556	1	Pin-Ball, Detent
46	70-07-109	1	Clip-Cable
47	HY09485	2	Washer-Plain
48	09261	4	Washer-Plain
99	92-2379	2	Clamp-Hose ●

● Not illustrated

Seat Pan Assembly

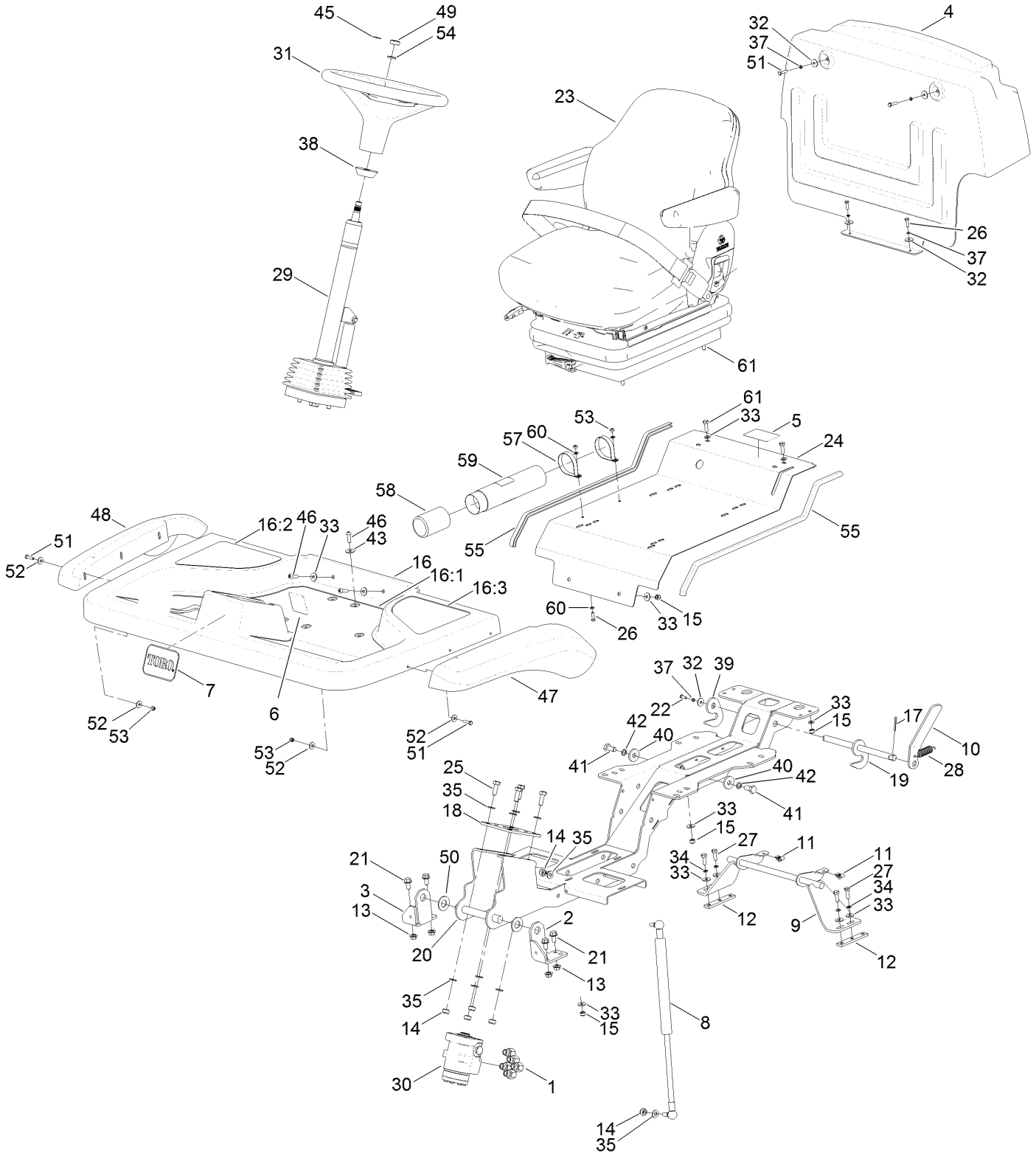

Seat Pan Assembly (continued)

Ref.	Part Number	Qty.	Description
1	111-3509	5	Adaptor
2	111-3243-03	1	Bracket-Platform Pivot, LH
3	111-2665-03	1	Bracket-Platform Pivot, RH
4	111-8497	1	Bulkhead
5	111-3566	1	Decal-Latch, Platform
6	111-3562	1	Decal
7	67-1300	1	Decal
8	111-9857	1	Gas Strut
9	111-3140-03	1	Bar-Latch
10	111-3269-03	1	Lever-Latch, Platform
11	410076	2	Nut
12	111-3281	2	Bar-Nut
13	63-11-015	4	Nut-Hex
14	ZNN1J000U	6	Nut-Hex, NI
15	09441	14	Nut-Hex, NI
16	111-9744	1	Operator Platform ASM
16:1	111-3506	1	Mat-Floor
16:2	111-3507	1	Mat-Side, LH
16:3	111-3508	1	Mat-Side, RH
17	70-11-004	1	Pin-Split
18	111-2899-03	1	Plate-Mount, Pump (Steering)
19	111-3266	1	Latch-Platform
20	111-9565-03	1	Support-Platform
21	63-11-018	4	Screw-Durloc
22	09362	1	Screw-HH
23	134-0260	1	Seat ASM (Incl. Seat Belt)
24	111-3069-03	1	Pan-Seat
25	09392	4	Screw-HH
26	09363	10	Screw-HH
27	03162	2	Screw-HH
28	70-07-063	1	Spring-Extension
29	111-6756	1	Steering Column ASM
30	111-7464	1	Valve-Control, Steering
30:99	94-4095	1	Centering Spring Kit ●
30:99	130-8358	1	Seal Kit ●
31	98-1471	1	Wheel-Steering
32	09263	5	Washer
33	09267	22	Washer-Plain
34	03469	4	Washer-Spring
35	ZWQ1J000U	10	Washer-Plain
37	09474	5	Washer-Spring
38	93-5429	1	Collar-Foam
39	111-3268	1	Latch-Plate, Platform
40	63-01-115	2	Washer
41	09415	2	Screw-HH
42	09599	2	Washer-Lock
43	09270	6	Washer-Plain
45	98-1459	1	Decal
46	ZHS1H025U	8	Screw-HSBH
47	111-4921	1	Mudguard-LH
48	111-4922	1	Mudguard-RH
49	09827	1	Nut - Jam
50	09499	2	Washer
51	09364	2	Screw-HH
52	09262	12	Washer
53	09438	8	Nut-Nyloc
54	HY4200	1	Washer-Spring
55	50-08-001	2	Edging-Rubber
57	107-1865	2	R-Clamp
58	104-7048	1	Cap-Housing
59	104-7050	1	Tube-Manual
60	09472	4	Washer-Plain
61	09368	4	Screw-HH
99	994808	1	Excluder-Draught ●

● Not illustrated

Seat Assembly No. 134-0260

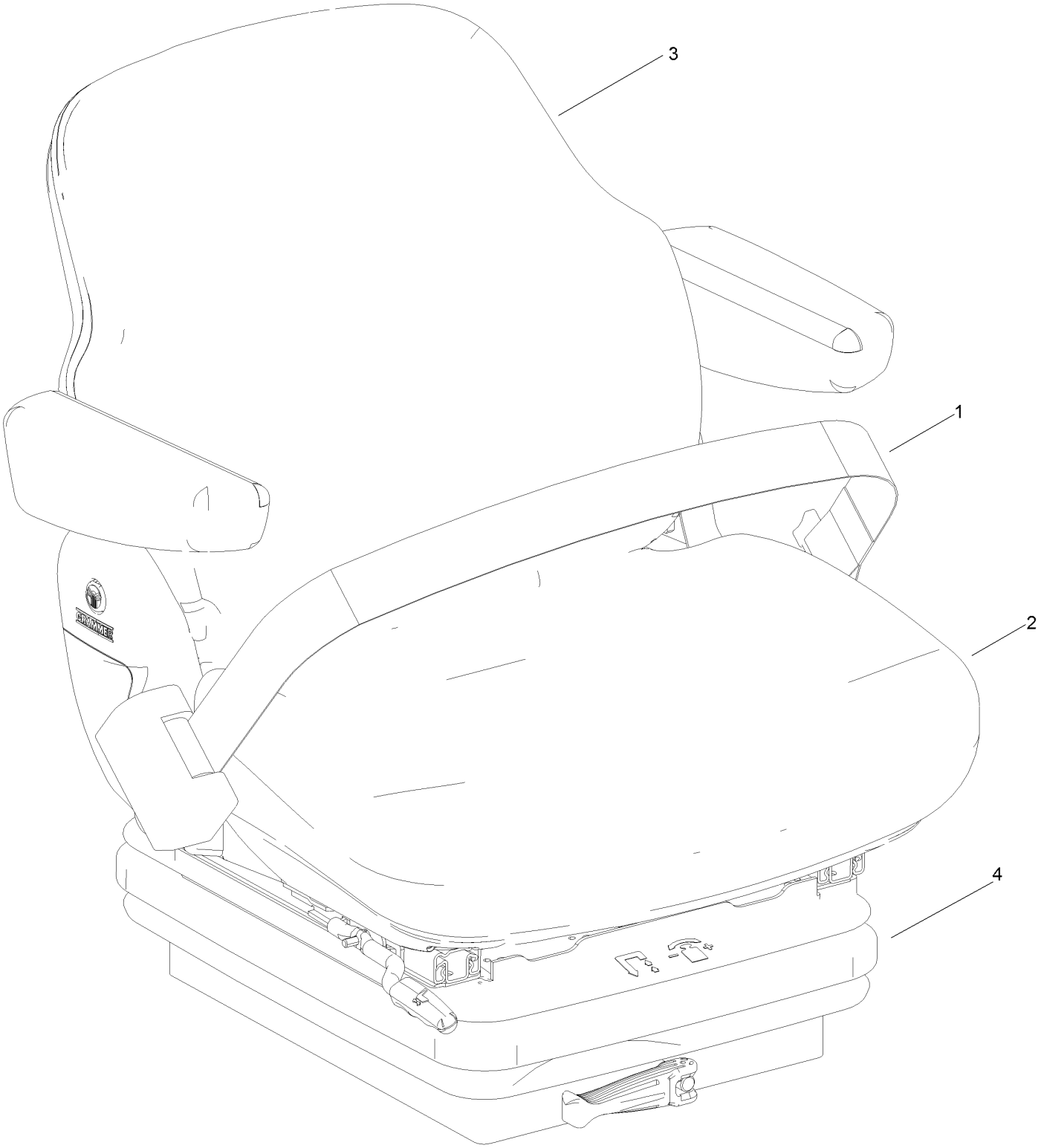

Seat Assembly No. 134-0260 (continued)

Ref.	Part Number	Qty.	Description
1	111-4936	1	Retractable Seat Belt ASM
2	111-5543	1	Cushion-Seat
3	111-5544	1	Cushion-Backrest
4	953820	1	Seat Gaiter
99	111-5542	1	Seat Switch Kit ●

● Not illustrated

Steering Column Assembly No. 111-6756

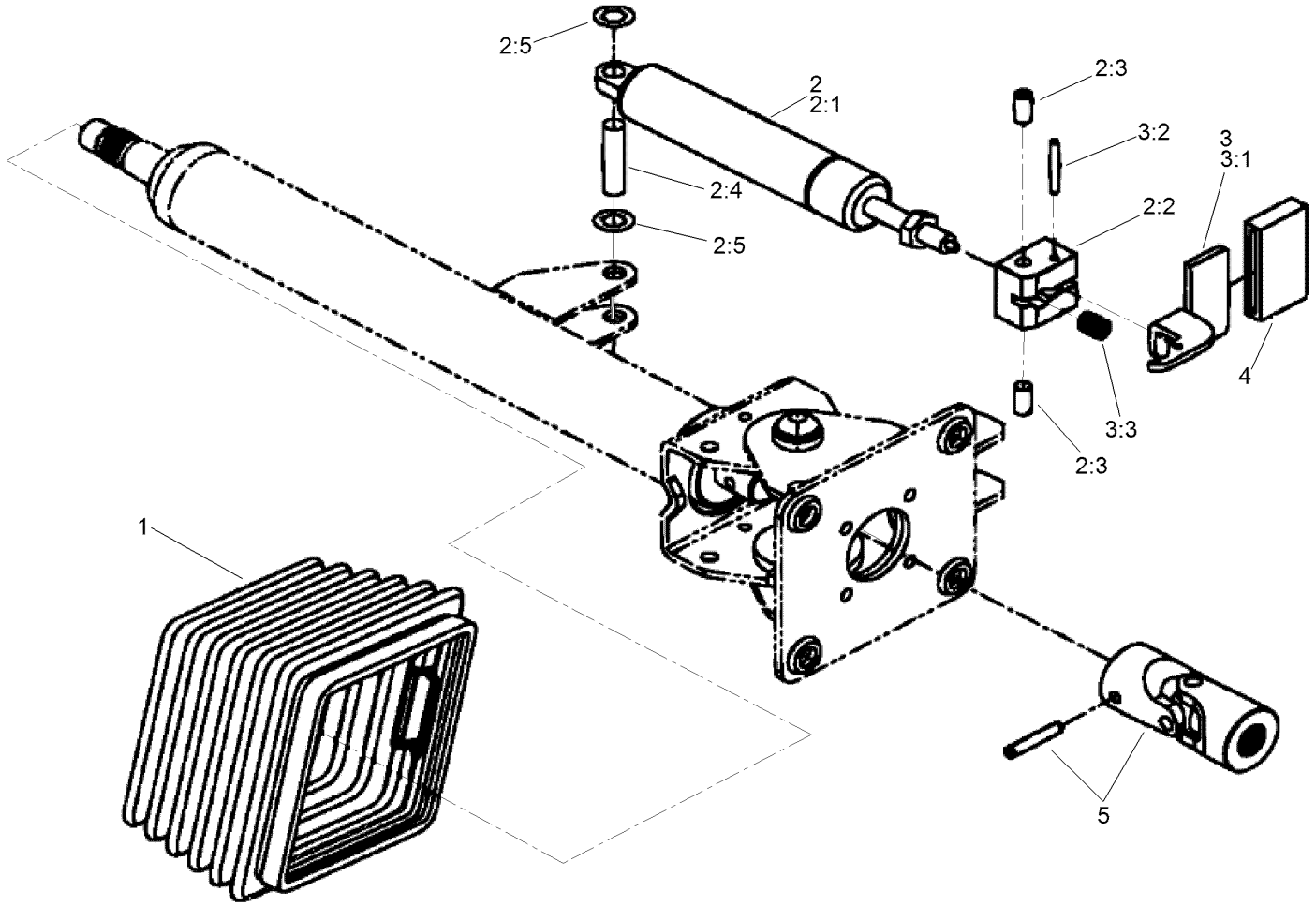

Steering Column Assembly No. 111-6756 (continued)

Ref.	Part Number	Qty.	Description
1	110-6462	1	Bellows-Rubber
2	110-6463	1	Cylinder Service Kit
2:1		1	Cylinder-Gas ■
2:2		1	Block-Pedal ■
2:3		2	Bolt ■
2:4		1	Pin ■
2:5		2	Washer-Lock ■

Ref.	Part Number	Qty.	Description
3	110-6464	1	Pedal Service Kit
3:1		1	Pedal ■
3:2		1	Pin ■
3:3		1	Spring ■
4	110-6465	1	Cover-Pedal ●
5	111-7314	1	Universal Joint Kit ●

● Not illustrated

■ Not serviced separately

Engine Cover Assembly

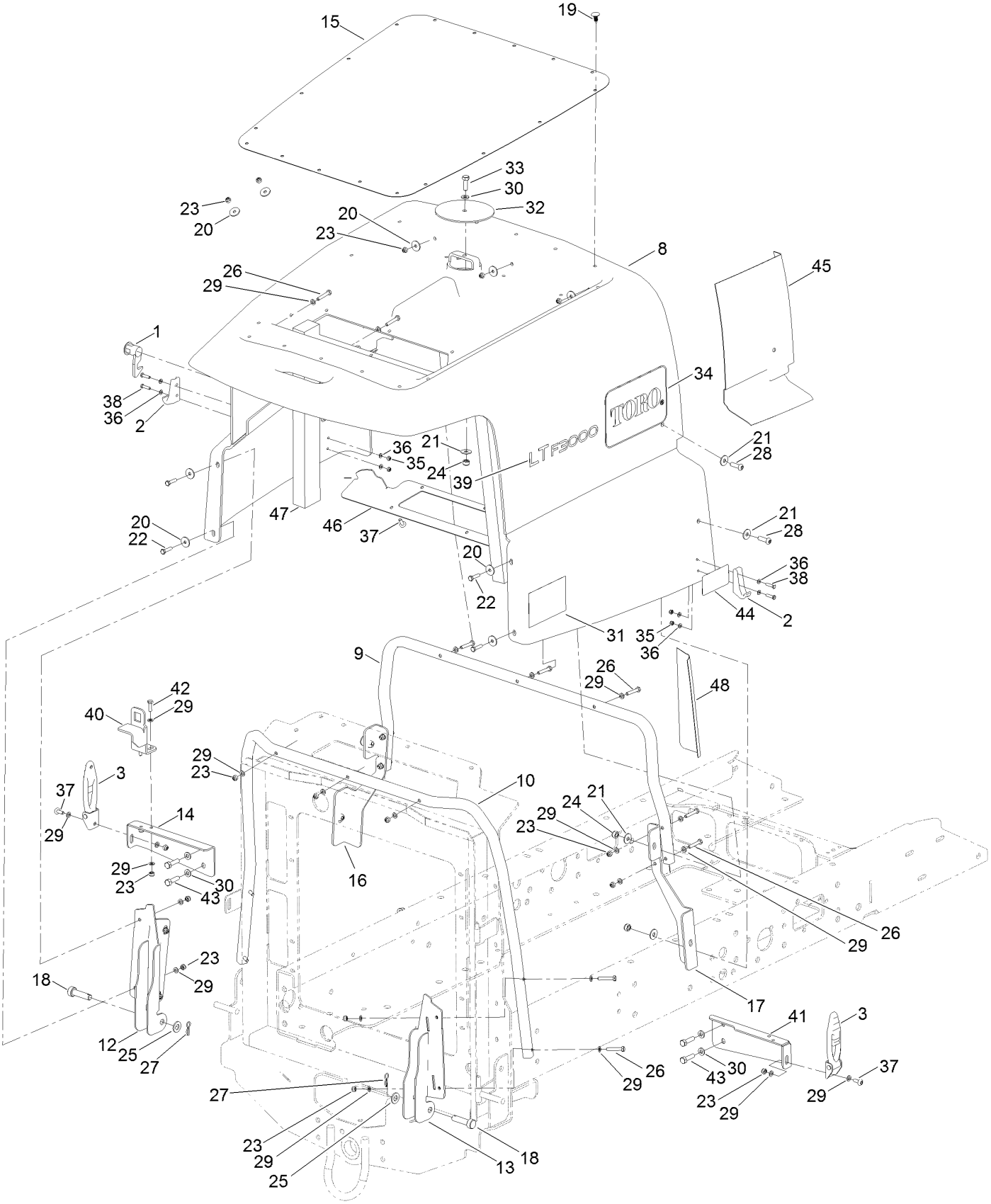

Engine Cover Assembly (continued)

Ref.	Part Number	Qty.	Description
1	98-5398	1	Latch
1:1	3218-20	1	Nut-Jam ●
2	103-2897	2	Latch-Catch
3	103-2898	2	Latch-Rubber
8	111-8495	1	Cover-Engine
9	111-9053-03	1	Tube-Front, Cover Frame
10	111-9054-03	1	Tube-Rear, Cover Frame
12	111-9058-03	1	Hinge-Cover, LH
13	111-9060-03	1	Hinge-Cover, RH
14	111-9103-03	1	Bracket-Cover, Latch
15	111-9117-03	1	Screen-Cover, Engine
16	111-9331-03	1	Mount-Cover, Front (LH)
17	111-9332-03	1	Mount-Cover, Front (RH)
18	111-9178	2	Pin-Hinge, Cover
19	117-2382	18	Plug-Plastic
20	09263	13	Washer
21	09267	9	Washer-Plain
22	09364	4	Screw-HH
23	09438	28	Nut-Nyloc
24	09441	9	Nut-Hex, NI
25	HY09485	2	Washer-Plain
26	09645	14	Setscrew-HH
27	H192040	2	Clip-R
28	ZHS1H025U	4	Screw-HSBH
29	09472	37	Washer-Plain
30	ZWP1H000U	9	Washer-Plain
31	94-8099	2	Decal
32	111-3557-03	1	Cover-Air, Intake
33	03162	1	Screw-HH
34	111-3728	2	Decal
35	09430	4	Nut-Nyloc
36	09470	8	Washer
37	09784	8	Screw-Soc, HD
38	ZDH1E020U	4	Screw-HH
39	111-9400	2	Decal
40	111-9464-03	1	Bracket-Cover, Lock
41	111-9468-03	1	Bracket-Cover, Latch (RH)
42	09363	2	Screw-HH
43	09369	4	Screw-HH
44	950889	1	Decal-Warning
45	111-9481	1	Heat Shield
46	111-9523-03	1	Plate-Cover, Seal
47	111-9524	2	Seal-Frame
48	111-9536	1	Heat-Shield, Lower
99	111-7488	3	Seal-Cover, Screen ●

● Not illustrated

Subsystem Hydraulic Manifold Assembly

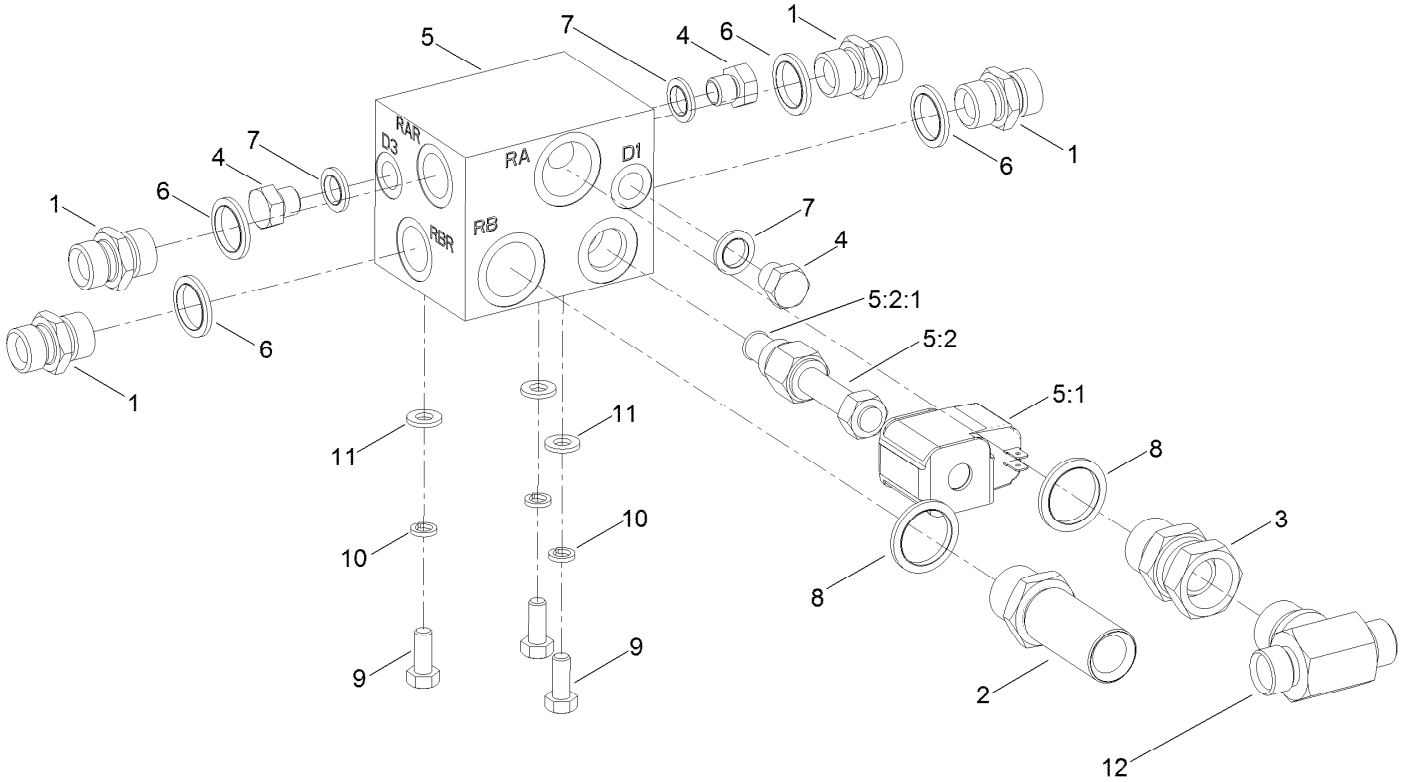

Subsystem Hydraulic Manifold Assembly (continued)

Ref.	Part Number	Qty.	Description
1	10-06-078	4	Adaptor-BSPP
2	111-7494	1	Adaptor-BSP
3	20-06-202	1	Adaptor
4	30-06-200	3	Plug-HYD
5	924687	1	Manifold-Transmission, Rear
5:1	910627	1	Coil-Solenoid
5:2	924688	1	Valve-Solenoid
5:2:1	910642	1	Seal Kit
6	10-06-032	4	Seal-Dowty
7	10-06-030	3	Seal-Dowty
8	10-06-033	2	Seal-Dowty
9	09368	3	Screw-HH
10	03469	3	Washer-Spring
11	ZWP1H000U	3	Washer-Plain
12	940607	1	Tee-BSPP

Valve Control Assembly

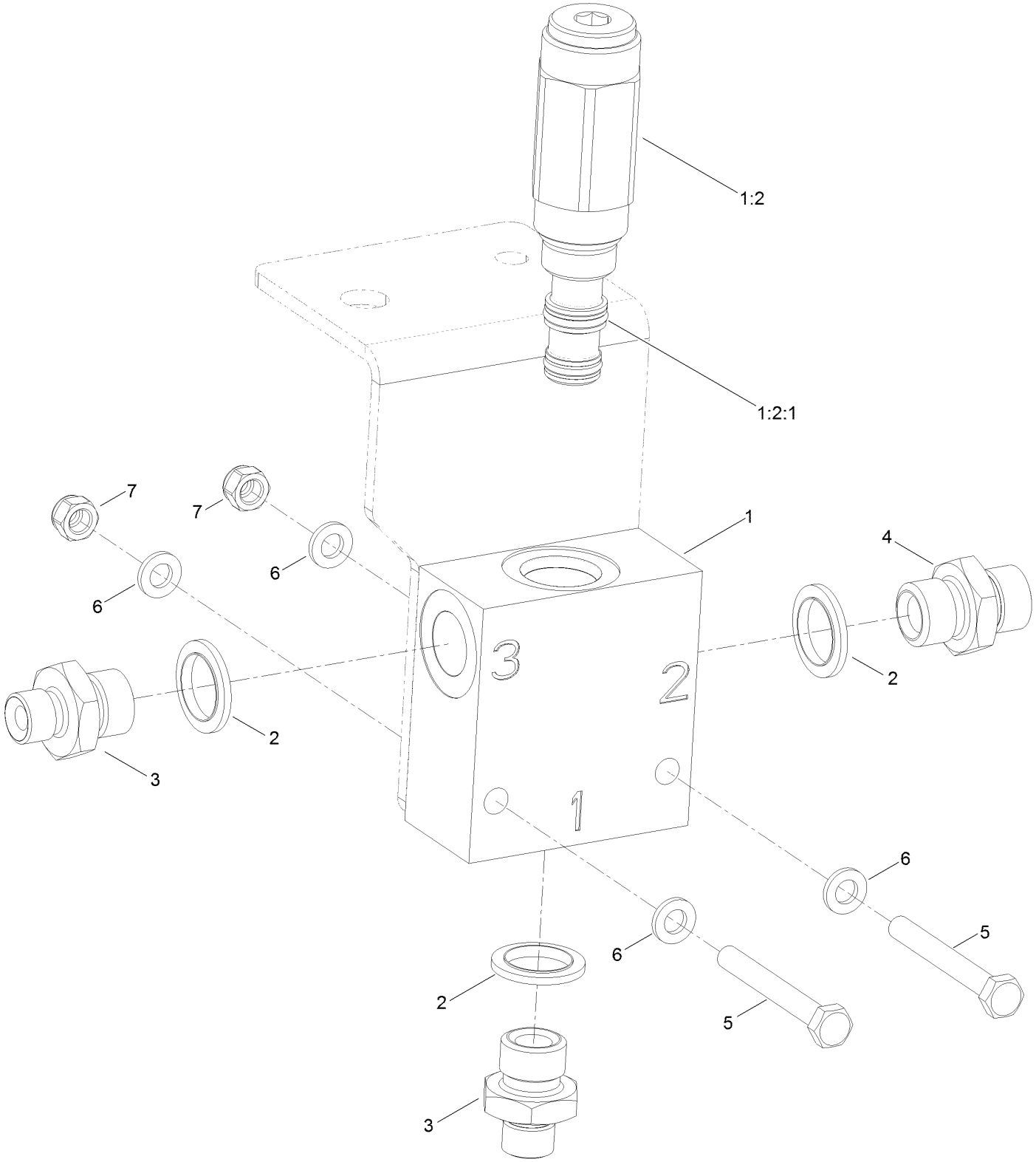

Valve Control Assembly (continued)

Ref.	Part Number	Qty.	Description
1	111-8428	1	Valve-Control, Brake
1:1	111-8441	1	Housing-Valve, 3-Way ●
1:2	111-9171	1	Valve, Control-Pressure
1:2:1	105-9164	1	Seal Kit
2	10-06-031	3	Seal-Dowty
3	50-06-009	2	Adaptor-BSP
4	10-06-042	1	Adaptor-BSPP
5	ZDH1F050U	2	Setscrew
6	09472	4	Washer-Plain
7	09438	2	Nut-Nyloc

● Not illustrated

Loom Kit Assembly

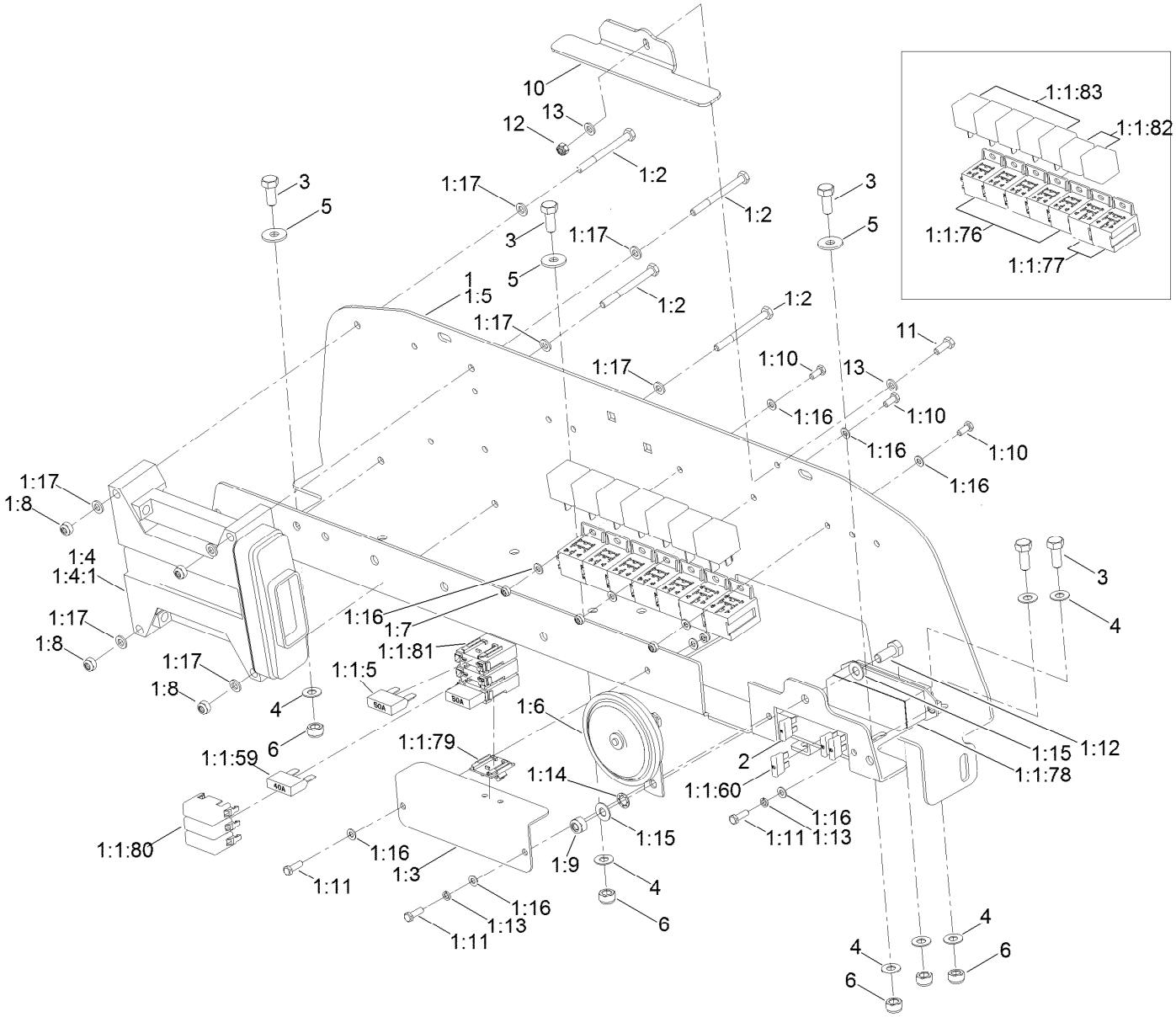

Loom Kit Assembly (continued)

Ref.	Part Number	Qty.	Description
1		1	Loom Kit ■
1:1	111-9115	1	Harness-Main ●
1:1:5	995714	2	Fuse-50A
1:1:34	111-0348	2	Diode ●
1:1:59	111-2898	1	Fuse-40A
1:1:60	70-09-026	3	Fuse-10A
1:1:76	111-0360	6	Base-Relay ●
1:1:77	111-0361	2	Base-Relay, 70A ●
1:1:78	70-09-096	1	Box-Fuse
1:1:79	111-0303	1	Bracket-Maxifuse ●
1:1:80	111-0302	3	Cover
1:1:81	111-0283	3	Holder-Maxifuse ●
1:1:82	924625	2	Relay-70A
1:1:83	111-0336	5	Relay-30A
1:2	09703	4	Bolt-HH
1:3	111-4842-03	1	Bracket-Fuse
1:4		1	Flail Controller ASM ■
1:4:1	111-7937	1	Control Unit, Lt/Ct
1:5	111-3037-03	1	Plate-Base, Electrical
1:6	70-09-108	1	Horn ASM
1:7	09430	4	Nut-Nyloc
1:8	09438	4	Nut-Nyloc

Ref.	Part Number	Qty.	Description
1:9	09441	1	Nut-Hex, NI
1:10	ZDH1E012U	3	Screw-HH
1:11	ZDH1E016U	3	Screw-HH
1:12	09368	1	Screw-HH
1:13	09644	2	Washer-Spring
1:14	09476	1	Washer-Shakeproof
1:15	09475	2	Washer
1:16	09470	10	Washer
1:17	09472	8	Washer-Plain
1:99	111-6745	1	Harness-Manifold, Cutters ●
1:99	950868	2	Diode Assembly
2	70-09-151	1	Fuse-15A
3	09368	2	Screw-HH
4	09475	7	Washer
5	09267	3	Washer-Plain
6	09441	5	Nut-Hex, NI
7	03162	3	Screw-HH ●
10	134-3682-03	1	Bracket, Relay
11	09362	1	Screw-HH
12	09438	1	Nut-Nyloc
13	09472	2	Washer-Plain
99	HY3966	30	Tie-Cable ●

● Not illustrated

■ Not serviced separately

Control Arm Assembly

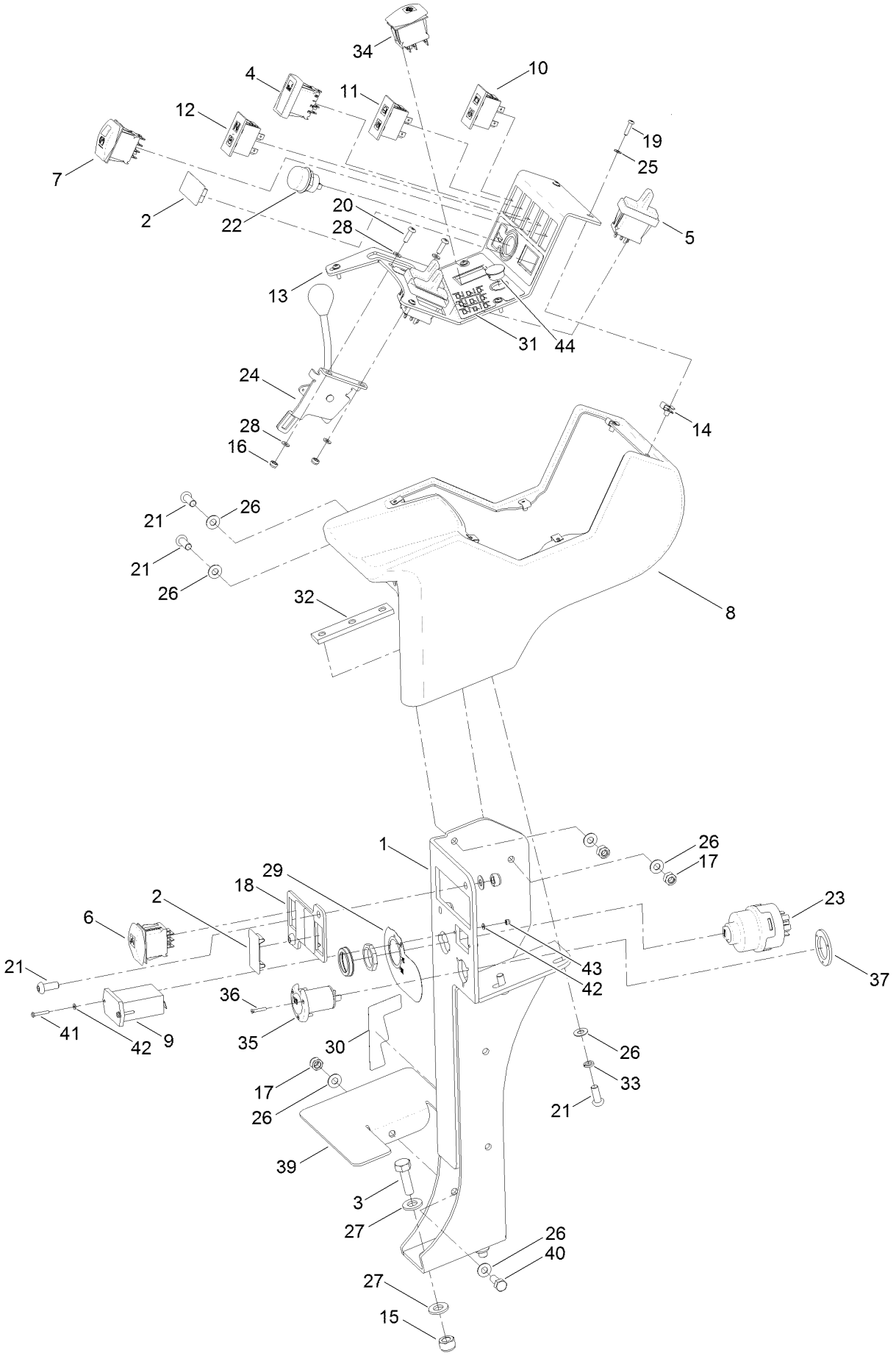

Control Arm Assembly (continued)

Ref.	Part Number	Qty.	Description
1	111-8496-03	1	Control Arm ASM
2	111-2337	4	Blank-Switch
3	09394	2	Bolt
4	111-7490	1	Switch-Cutters
5	111-2956	3	Switch-Lift
6	111-2451	1	Switch-Limited
7	111-2254	1	Switch-Parking Brake, On-None-On
8	111-3004	1	Pod-Control
9	75-6820	1	Hourmeter
10	111-2333	1	Indicator-Illuminated
11	111-2334	1	Indicator-Illuminated
12	111-3026	1	Indicator-Illuminated
13	111-2963-03	1	Instrument-Panel
14	111-3079	6	U-Nut
15	09447	2	Nut
16	09430	2	Nut-Nyloc
17	09441	5	Nut-Hex, NI
18	111-8494-03	1	Plate-Switch
19	111-3473	6	Screw-Button
20	111-3381	2	Screw-HSBH
21	ZHS1H020U	6	Screw-HSBH
22	924618	1	Switch-Horn, Push
23	74-09-009	1	Switch-Ignition

Ref.	Part Number	Qty.	Description
23:1	74-09-017	1	Key-Ignition ●
23:2	74-09-010	1	Switch-Cover ●
24	111-7090	1	Cable-Throttle
25	09658	6	Washer
26	09475	10	Washer
27	ZWQ1J000U	4	Washer-Plain
28	09470	4	Washer
29	111-3344	1	Decal-Switch, Ignition
30	111-3658	1	Decal-Latch, Cutterhead
31	134-1807	1	Decal-Lift Switches & Engine Control
32	111-3281	1	Bar-Nut
33	03469	2	Washer-Spring
34	111-8021	1	Switch-Lock
35	111-2888	1	Socket
36	111-3539	3	Screw-Slot, Countersunk
37	111-6026	1	Bracket-Securing
39	111-5239-03	1	Plate-Filler
40	09368	1	Screw-HH
41	09696	2	Setscrew
42	HY09697	4	Washer-Plain
43	HY09698	2	Nut-Nyloc
44	130-8439	1	Plug-Dome
99	98-9321	1	Ring-Key ●

● Not illustrated

Control Pedal Assembly

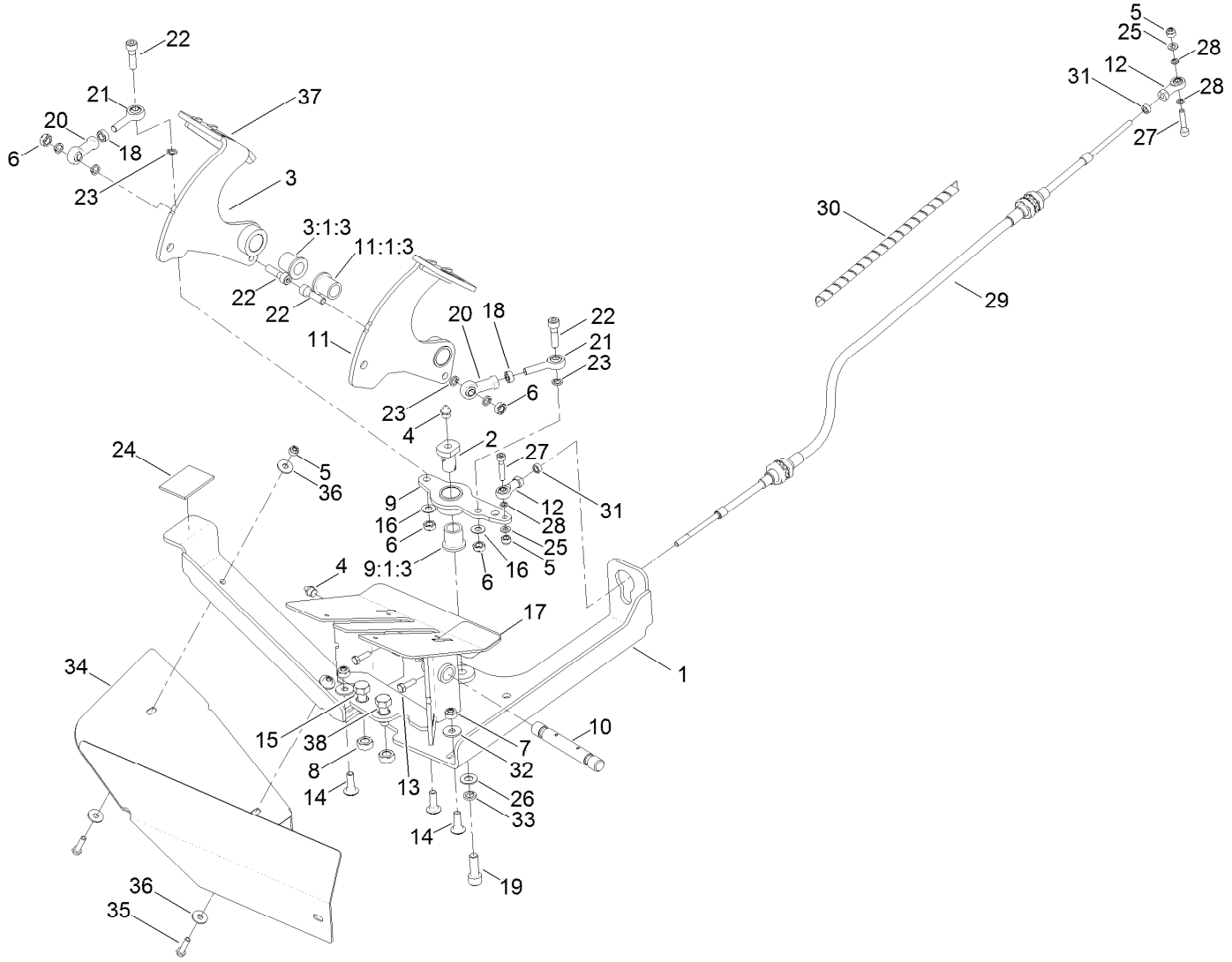

Control Pedal Assembly (continued)

Ref.	Part Number	Qty.	Description
1	111-7175-03	1	Pedal-Mounting
2	111-7122	1	Boss-Pedal, Link
3	111-9243-03	1	Forward Pedal ASM
3:1:3	953868	1	Bushing-Flange, Oilite
4	10-11-017	2	Fitting-Straight
5	09544	4	Nut-Nyloc
6	ZNB1H000U	4	Nut
7	09441	3	Nut-Hex, NI
8	09449	2	Nut
9	111-7068-03	1	Pedal Link ASM
9:1:3	953868	1	Bushing-Flange, Oilite
10	111-1310	1	Pin-Control, Pedal
11	111-9244-03	1	Reverse Pedal ASM
11:1:3	953868	1	Bushing-Flange, Oilite
12	111-4579	2	Rod End-Female/Female
13	09363	2	Screw-HH
14	09373	3	Bolt-Coach
15	09392	1	Screw-HH
16	09475	2	Washer
17	111-3567	1	Decal-Pedal, Operation
18	ZNH1H000U	2	Nut-Hex
19	ZCS1J030U	1	Screw-HSH
20	111-2896	2	Rod-End, Female
21	111-6147	2	Rod End
22	ZCS1H030U	4	Screw-Cap
23	111-6948	6	Washer-Spring
24	HY910808	1	Strip-Neoprene
25	09472	2	Washer-Plain
26	09479	1	Washer-Plain
27	111-4586	2	Screw-HSH
28	09474	3	Washer-Spring
29	111-7140	1	Cable-Transmission
30	111-6133	1	Guard-Spiral
31	09437	2	Nut
32	09267	3	Washer-Plain
33	09480	1	Washer-Lock
34	111-7253-03	1	Deflector-Grass, Cutter (RH)
35	09364	2	Screw-HH
36	09262	4	Washer
37	70-07-067	1	Tape-Slip, Anti
38	09611	1	Bolt-HH

Cutter Component Assembly

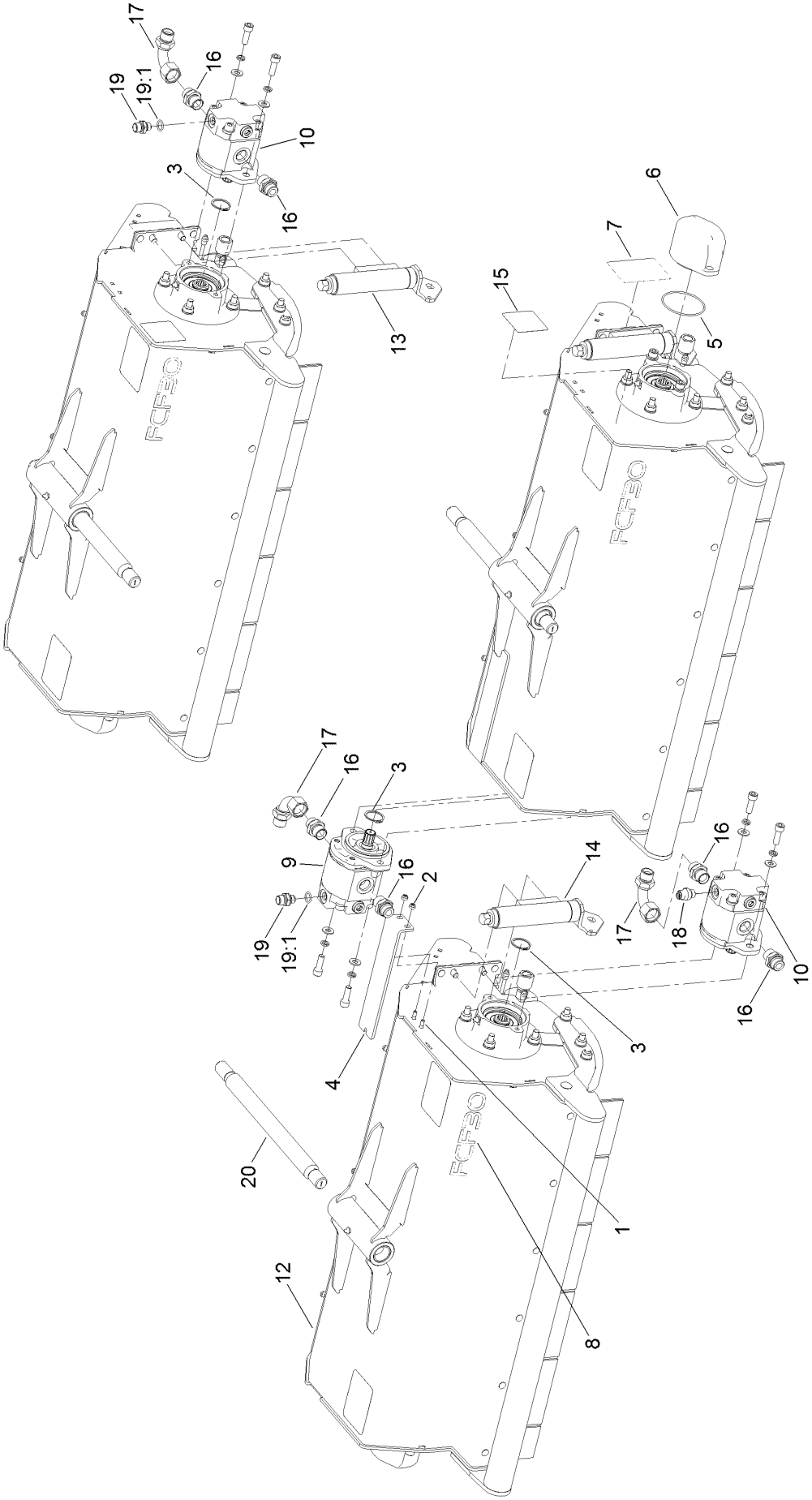

Cutter Component Assembly (continued)

Ref.	Part Number	Qty.	Description
1	09668	4	Bolt-Coach
2	09438	4	Nut-Nyloc
3	111-9214	3	Ring-Retaining, EXT
4	111-9179	2	Guide-Plate, Roller
5	876032	3	O-Ring
6	111-8487-03	3	Weight [black]
7	111-9382	4	Decal-HOC
8	111-9401	3	Decal
9	111-8429	1	Motor-Cutter, Clockwise
9:1	111-8146	1	Seal Kit ●
9:2	117-5107	1	Valve-Check ●
9:3	111-9630	1	Valve-Shock, 17 Bar ●
10	111-8430	2	Motor-Cutter, Anti-Clockwise
10:1	111-8146	1	Seal Kit ●
10:2	117-5107	1	Valve-Check ●
10:3	111-9630	1	Valve-Shock, 17 Bar ●
12	111-9515	3	Flail Cutterhead ASM
13	111-9518	1	Centre Head HOC Adjuster ASM
14	111-9519	2	Front Head HOC Adjuster ASM
15	111-9648	4	Decal
16	111-9107	6	Fitting-Straight
17	111-9108	3	Fitting-Elbow, 90
18	70-06-054	1	Adaptor
19	111-4788	2	Fitting-Straight
19:1	70-06-165	1	Seal-O Ring ●
20	65-05-127	3	Pin-Head, Pivot
99	HY922101	1	Spanner-Adjuster, Cutterhead ●

● Not illustrated

Flail Cutterhead Assembly No. 111-9515

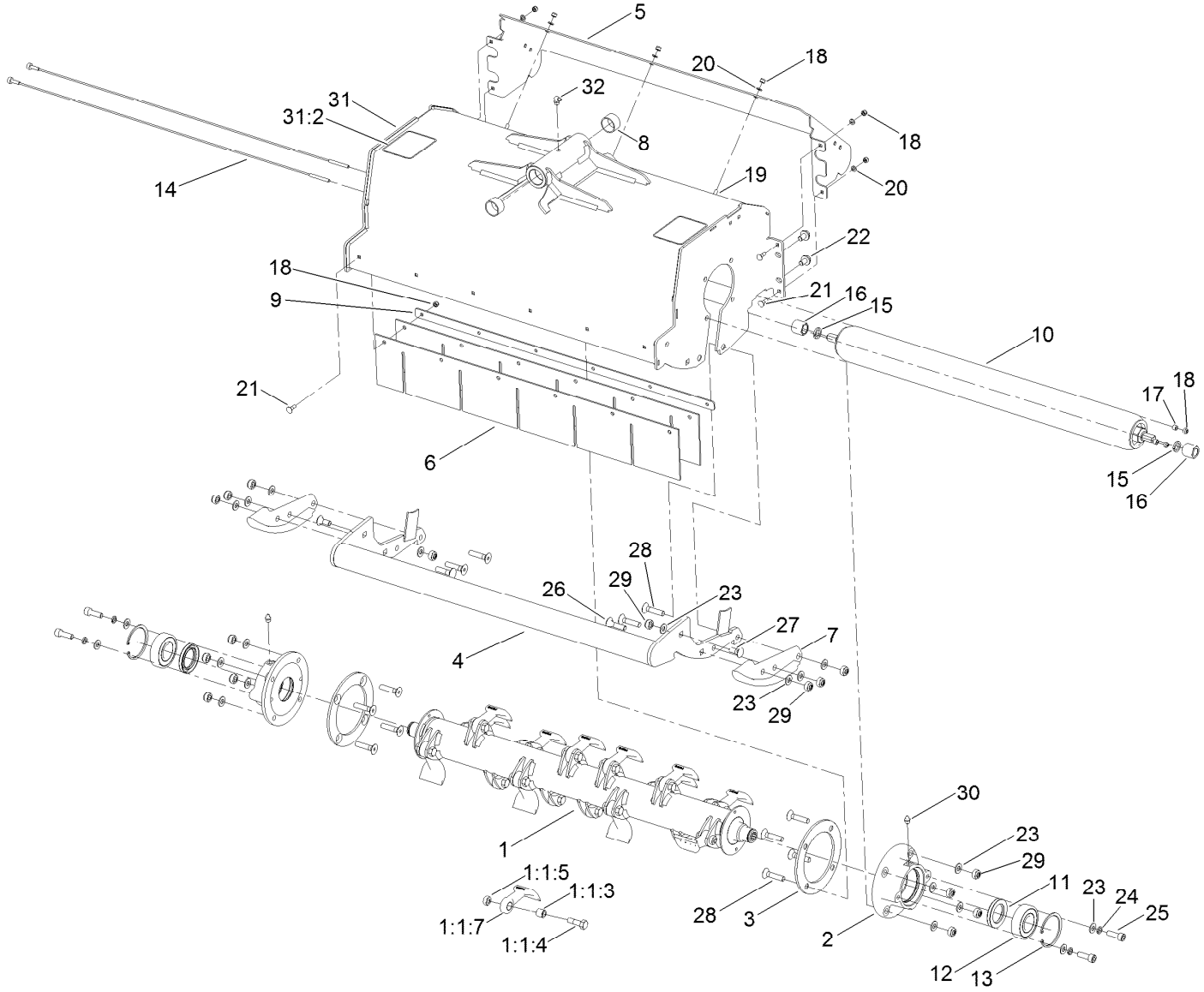

Flail Cutterhead Assembly No. 111-9515 (continued)

Ref.	Part Number	Qty.	Description
1	134-0277-03	1	Rotor ASM
1:1		1	Rotor ASM ● ■
1:1:3	111-9172	16	Bushing-Sleeve
1:1:4	111-9646	16	Screw-HH, Patch
1:1:5	09449	16	Nut
1:1:7	111-9631	1	Kit-Blade(X2)
1:1:7	111-9668	1	Kit-Blade(X16)
1:1:7:2	111-9172	16	Bushing-Sleeve
1:1:7:3	111-9646	16	Screw-HH, Patch
1:1:7:4	09449	16	Nut
2	111-9208-03	2	Housing-Bearing, Rotor
3	111-9123-03	2	Rotor-Ring
4	111-9164-03	1	Tube ASM
5	111-9142-01	1	Frame-Extension
6	111-9160	2	Guard-Rubber, Front
7	884024W	2	Skid
8	876065	2	Bushing-Sleeve
9	111-9144	1	Strip-Clamp, Guard
10	876006	1	Roller-Smooth
10:99	876078	1	Kit-Bearing-Roller, Taper ●
10:99	111-2561	2	Fitting-Grease ●
11	111-9138	2	Seal-Lip, Single
12	111-9136	2	Bearing-Ball
13	111-9135	2	Ring-Retaining, Int
14	63-07-072	2	Scraper-Wire
15	HY4200	2	Washer-Spring
16	876062	2	Roller-Nut
17	340154	2	Bushing
18	09438	15	Nut-Nyloc
19	09570	3	Bolt-Carriage
20	09472	7	Washer-Plain
21	09668	10	Bolt-Coach
22	63-11-019	4	Screw-HHF
23	ZWQ1J000U	20	Washer-Plain
24	09480	4	Washer-Lock
25	ZCS1J030U	4	Screw-HSH
26	111-9327	2	Bolt-Carriage
27	15-11-003	2	Bolt-CARR
28	111-9328	12	Screw-Sh, Csk
29	ZNN1J000U	16	Nut-Hex, NI
30	10-11-017	2	Fitting-Straight
31	134-0047	1	Frame ASM
31:2	40-13-010	2	Decal-Warning
32	63-07-027	1	Zerk-Grease, BSP (90 DEG)

● Not illustrated

■ Not serviced separately

Center Head HOC Adjuster Assembly

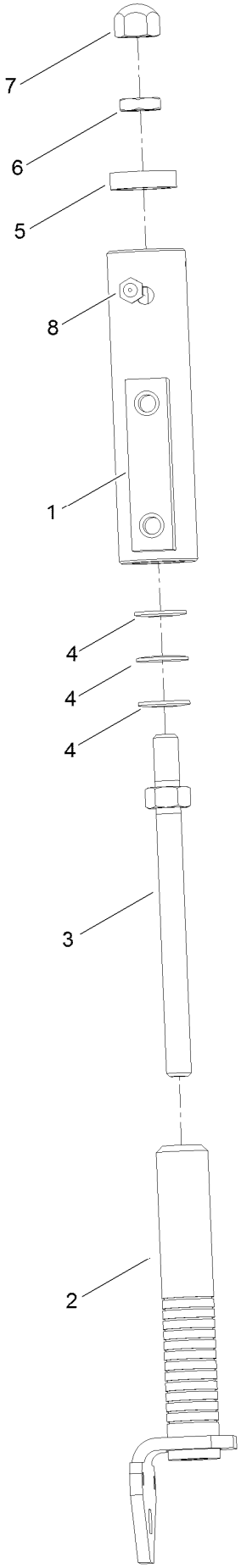

Center Head HOC Adjuster Assembly (continued)

Ref.	Part Number	Qty.	Description
1	876064W	2	Roller-Mounting
2	134-0074	2	Shaft-Adjuster, Roller
3	63-01-960	2	Stud-Roller, Adjusting
4	876099	6	Washer-Spring
5	876098	2	Cap-Control, Pressure
6	ZNL1L000U	2	Nut-Hex
7	ZNK1L000U	2	Nut-Dome
8	10-11-017	2	Fitting-Straight

Front Head HOC Adjuster Assembly No. 111-9519

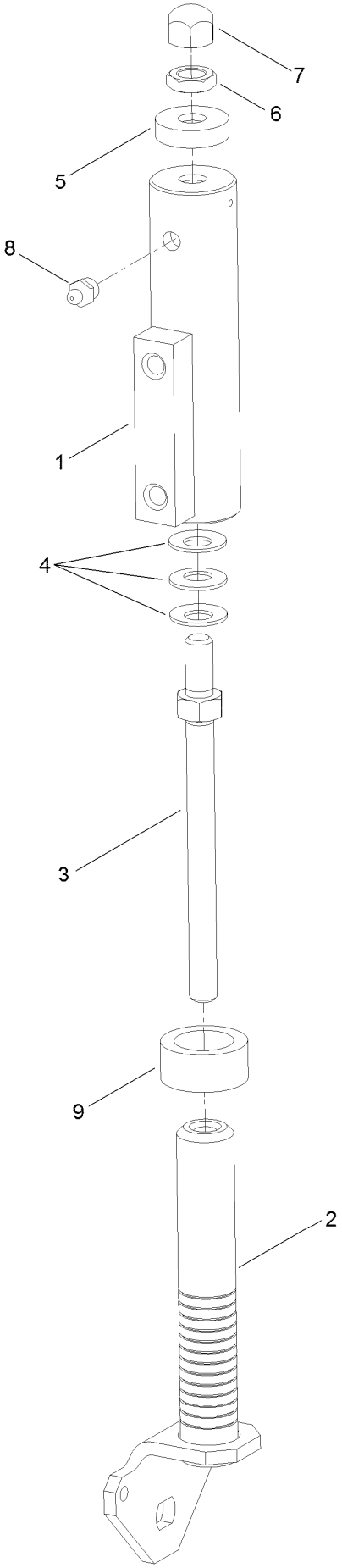

Front Head HOC Adjuster Assembly No. 111-9519 (continued)

Ref.	Part Number	Qty.	Description
1	876064W	2	Roller-Mounting
2	134-0074	2	Shaft-Adjuster, Roller
3	63-01-960	2	Stud-Roller, Adjusting
4	876099	6	Washer-Spring
5	876098	2	Cap-Control, Pressure
6	ZNL1L000U	2	Nut-Hex
7	ZNK1L000U	2	Nut-Dome
8	10-11-017	2	Fitting-Straight
9	134-0077	2	Spacer

Fuel Tank and Storage Pod Assembly

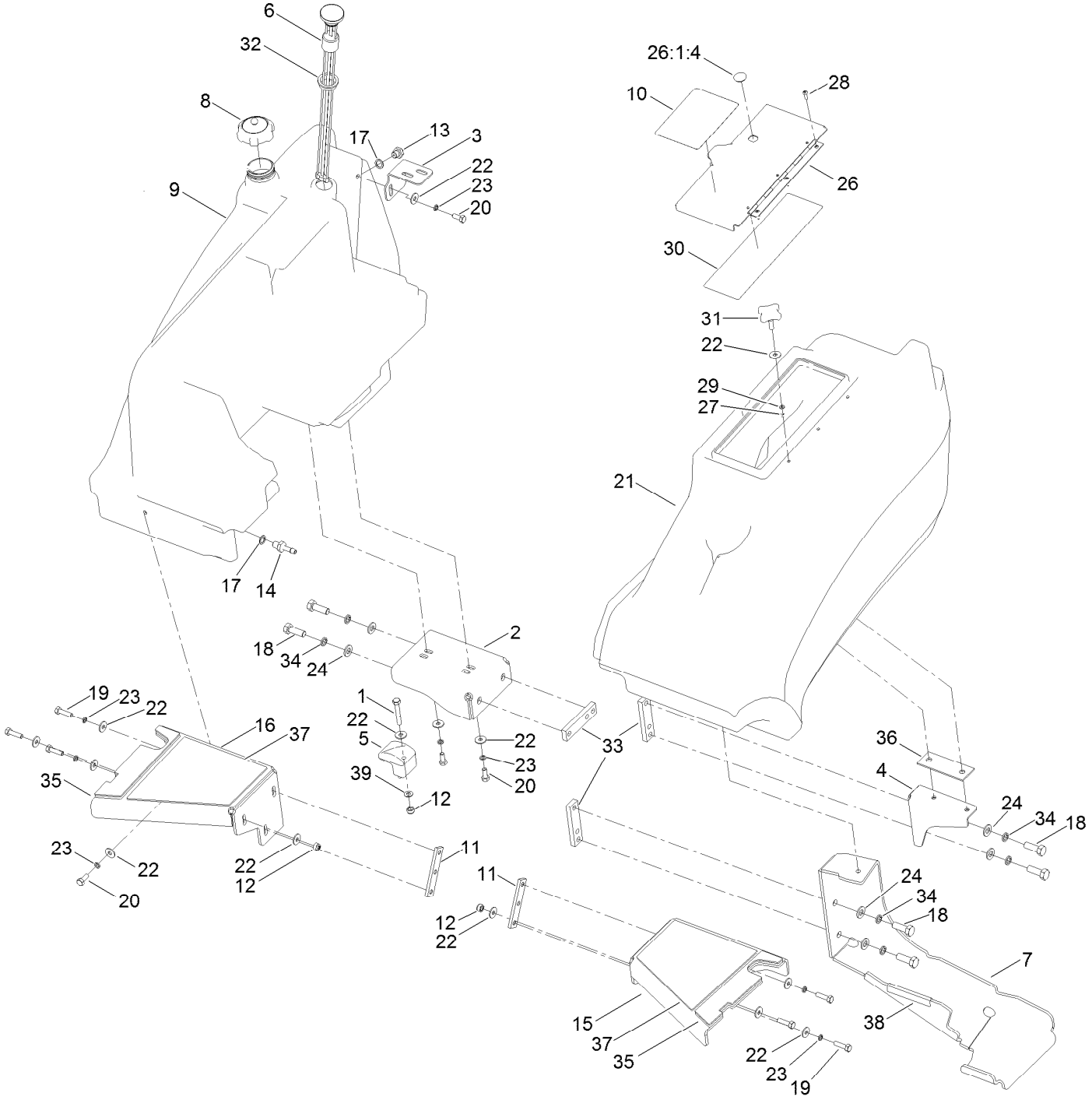

Fuel Tank and Storage Pod Assembly (continued)

Ref.	Part Number	Qty.	Description
1	09565	1	Screw-HH
2	134-0248-03	1	Bracket, Fuel Tank
3	111-3453-03	1	Bracket-Fuel Tank, Upper
4	111-3424-03	1	Bracket-Pod, Storage
5	107-4543	1	Clamp
6	104-5603	1	Gauge-Level, Fuel
7	111-7306-01	1	Step-Foot, Rev
8	111-3531	1	Cap-Fuel
9	111-9967	1	Tank-Fuel
10	111-5007	1	Decal-Warning, Inclines
11	111-3281	2	Bar-Nut
12	09441	3	Nut-Hex, NI
13	910352	1	Pipe-Return, Fuel
14	910351	1	Pipe-Suction, Fuel
15	111-9042-03	1	Support-Platform
16	111-9041-03	1	Support-Platform
17	111-3925	2	Washer-Fiber
18	ZDH1L035U	6	Screw-HH
19	09369	6	Screw-HH
20	09368	4	Screw-HH
21	111-3295	1	Pod-Storage
22	09267	16	Washer-Plain
23	03469	8	Washer-Spring
24	HY09485	6	Washer-Plain
26	111-7242-03	1	Cover-Storage
26:1		1	Cover Assembly Storage Pod ● ■
26:1:4	134-2164	1	Plug-Lid, Storage
27	09430	3	Nut-Nyloc
28	111-3381	3	Screw-HSBH
29	09470	3	Washer
30	111-9649	1	Decal-Maintenance
31	111-3666	3	Handwheel
32	95-8972	1	Grommet
33	111-4490	3	Bar-Nut
34	09599	6	Washer-Lock
35	111-9044	2	Pad-Support, Outer
36	111-5388	1	Pad-Rubber, Storage Pod
37	111-9043	2	Pad-Support, Inner
38	50-08-001	1	Edging-Rubber
39	09475	1	Washer
99	70-07-067	1	Tape-Slip, Anti ●

● Not illustrated

■ Not serviced separately

Roll-Over Protection System Assembly

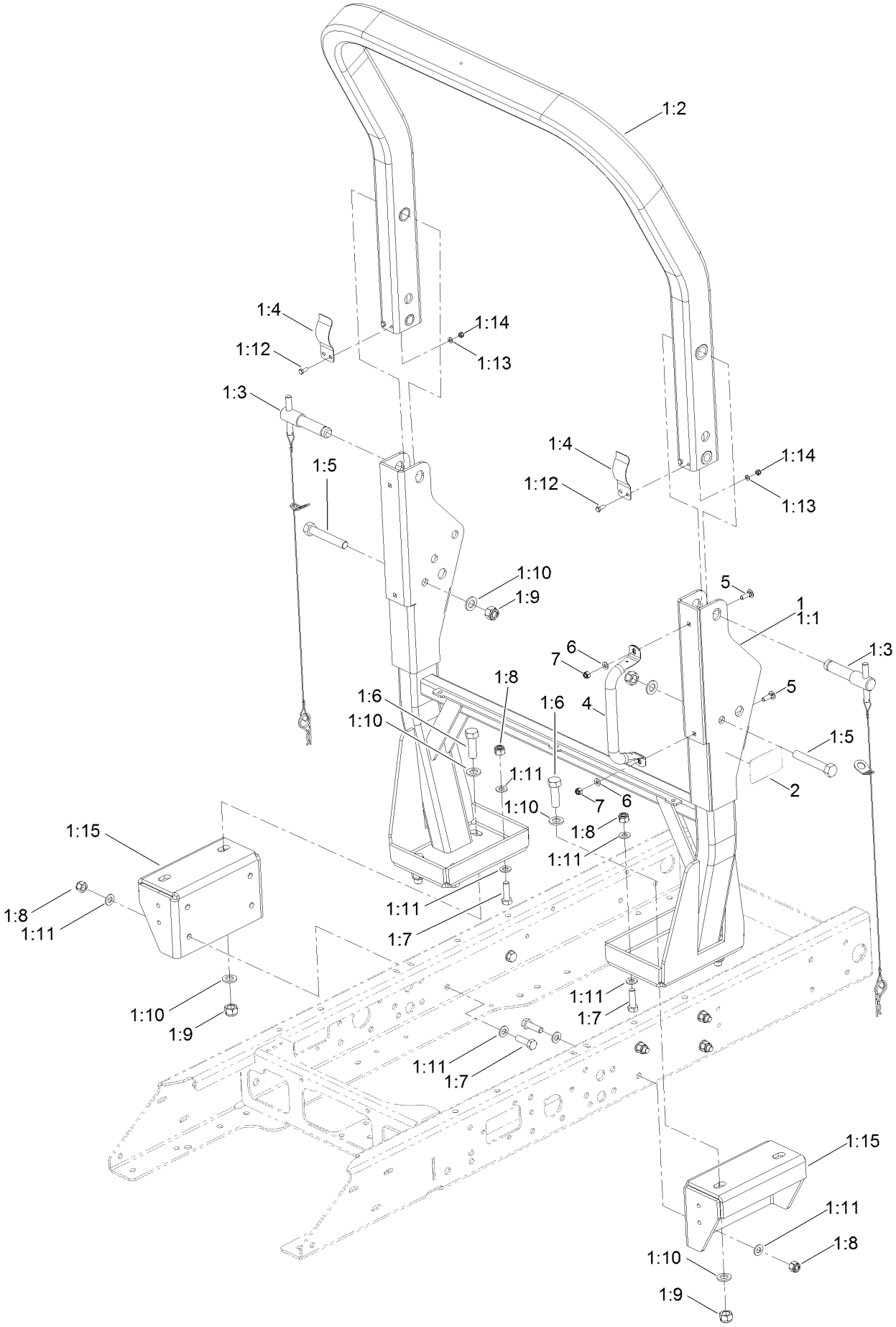

Roll-Over Protection System Assembly (continued)

Ref.	Part Number	Qty.	Description
1	111-8039	1	ROPS ASM
1:1	111-9047-03	1	ROPS-Lower
1:2	111-8040-03	1	ROPS-Upper
1:3	111-9280	2	Pin Assembly
1:4	110-5696	2	Spring-Leaf
1:5	ZBH1P100U	2	Bolt
1:6	ZDH1P050U	4	Screw-HH
1:7	63-11-010	12	Bolt-HH
1:8	111-9291	12	Nut-Hex, Nyloc
1:9	09456	6	Nut
1:10	09491	10	Washer-Plain
1:11	HY09485	24	Washer-Plain
1:12	09362	4	Screw-HH
1:13	09472	4	Washer-Plain
1:14	09438	4	Nut-Nyloc
1:15	111-9065-03	2	Bracket-Chassis, ROPS
2	111-0773	2	Decal
4	134-2022-03	1	Handle-ROPS
5	09373	2	Bolt-Coach
6	ZWP1H000U	2	Washer-Plain
7	09441	2	Nut-Hex, NI

Hydraulic Oil Tank Assembly

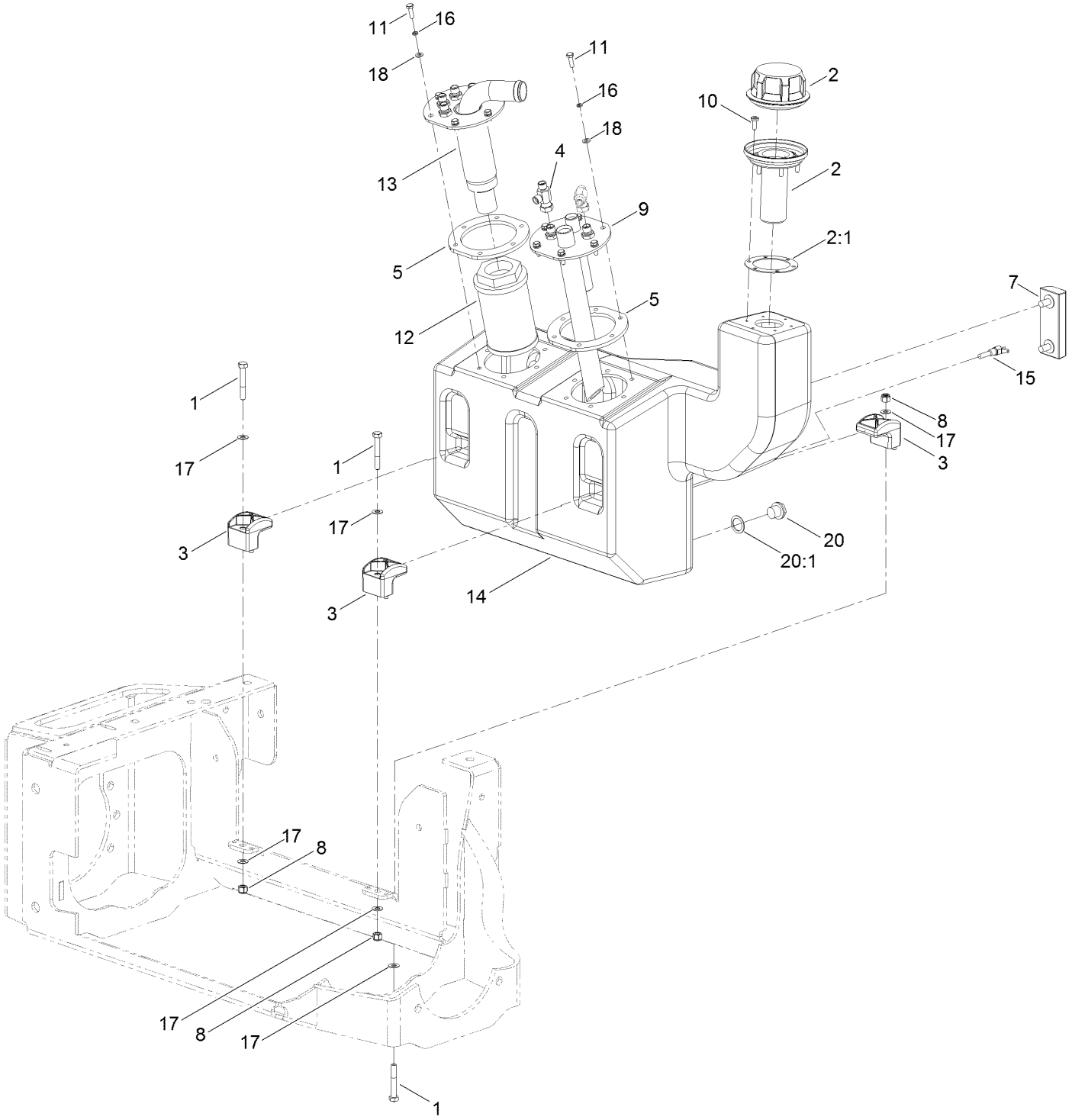

Hydraulic Oil Tank Assembly (continued)

Ref.	Part Number	Qty.	Description
1	09565	3	Screw-HH
2	HY910601	1	Cap-Breather, Filler
2:1	910648	1	Cap-Gasket, Filler
3	107-4543	3	Clamp
4	10-06-083	1	Fitting-Tee
5	111-9531	2	Gasket-Flange
7	65-06-018	1	Gauge-Level, Oil
8	09441	3	Nut-Hex, NI
9	111-9533-03	1	Flange-Return
10	09634	6	Screw-PPH, HD
11	09363	12	Screw-HH
12	10-06-025	1	Filter-Suction
13	111-9532	1	Flange-Suction
14	111-9528	1	Tank-Oil, Hydraulic
15	940852	1	Switch-Temperature
16	09474	12	Washer-Spring
17	09475	6	Washer
18	09472	12	Washer-Plain
20	20-06-207	1	Plug-Magnetic
20:1	111-7925	1	Washer-Fiber

Hydraulic Pump Assembly

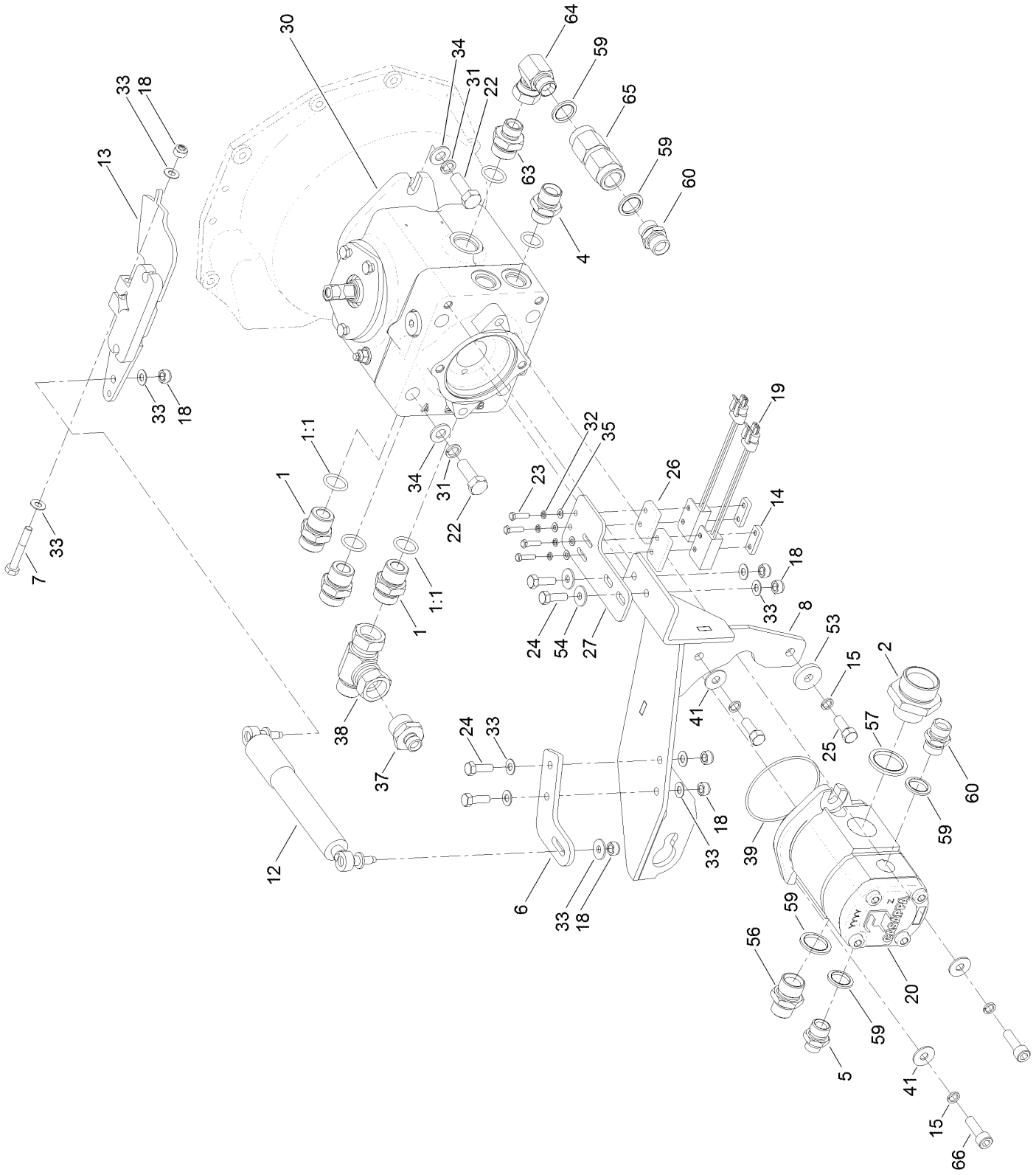

Hydraulic Pump Assembly (continued)

Ref.	Part Number	Qty.	Description
1	70-06-050	3	Adaptor-Boss
1:1	70-06-168	1	Seal-O Ring
2	15-06-109	1	Adaptor
4	111-9107	1	Fitting-Straight
5	10-06-043	1	Adaptor
6	111-6853-03	1	Adjuster-Damper
7	09565	1	Screw-HH
8	111-6456-03	1	Bracket-Control, Pump
12	111-9548	1	Damper Kit
13	111-6814	1	Lever-Control, Pump
14	111-3336	2	Bar-Switch, Proximity
15	09273	4	Washer-Spring
18	09441	7	Nut-Hex, NI
19	105-0023	2	Switch-Proximity
20	111-8424	1	Pump-Tandem
20:99	111-9632	1	Kit-Seal ●
22	ZDH1L035U	2	Screw-HH
23	ZDH1E020U	4	Screw-HH
24	03162	4	Screw-HH
25	HY103653	2	Screw-HH
26	111-3676	2	Spacer-Switch, Proximity
27	111-3260-03	1	Adjuster-Switches

Ref.	Part Number	Qty.	Description
30	111-8723	1	Pump-Transmission
31	09599	2	Washer-Lock
32	09644	4	Washer-Spring
33	09475	9	Washer
34	HY09485	2	Washer-Plain
35	09257	4	Washer
37	20-06-212	1	Adaptor-BSP
38	60-06-009	1	Adaptor-Tee
39	70-06-028	1	O-Ring
41	HY03355	3	Washer-Plated
53	65-01-559	1	Washer-Space
54	09267	3	Washer-Plain
56	950726	1	Adaptor-BSP
57	09-06-214	1	Seal-Dowty
59	10-06-032	5	Seal-Dowty
60	10-06-078	2	Adaptor-BSPP
63	70-06-066	1	Adaptor
64	111-9766	1	Fitting-Elbow, 90
65	111-9111	1	Fitting-Check
66	111-9168	2	Screw-Sh
67	20-06-202	1	Adaptor ●
99	74-07-020	1	Tie-Cable ●

● Not illustrated

Damper Kit Assembly No. 111-9548

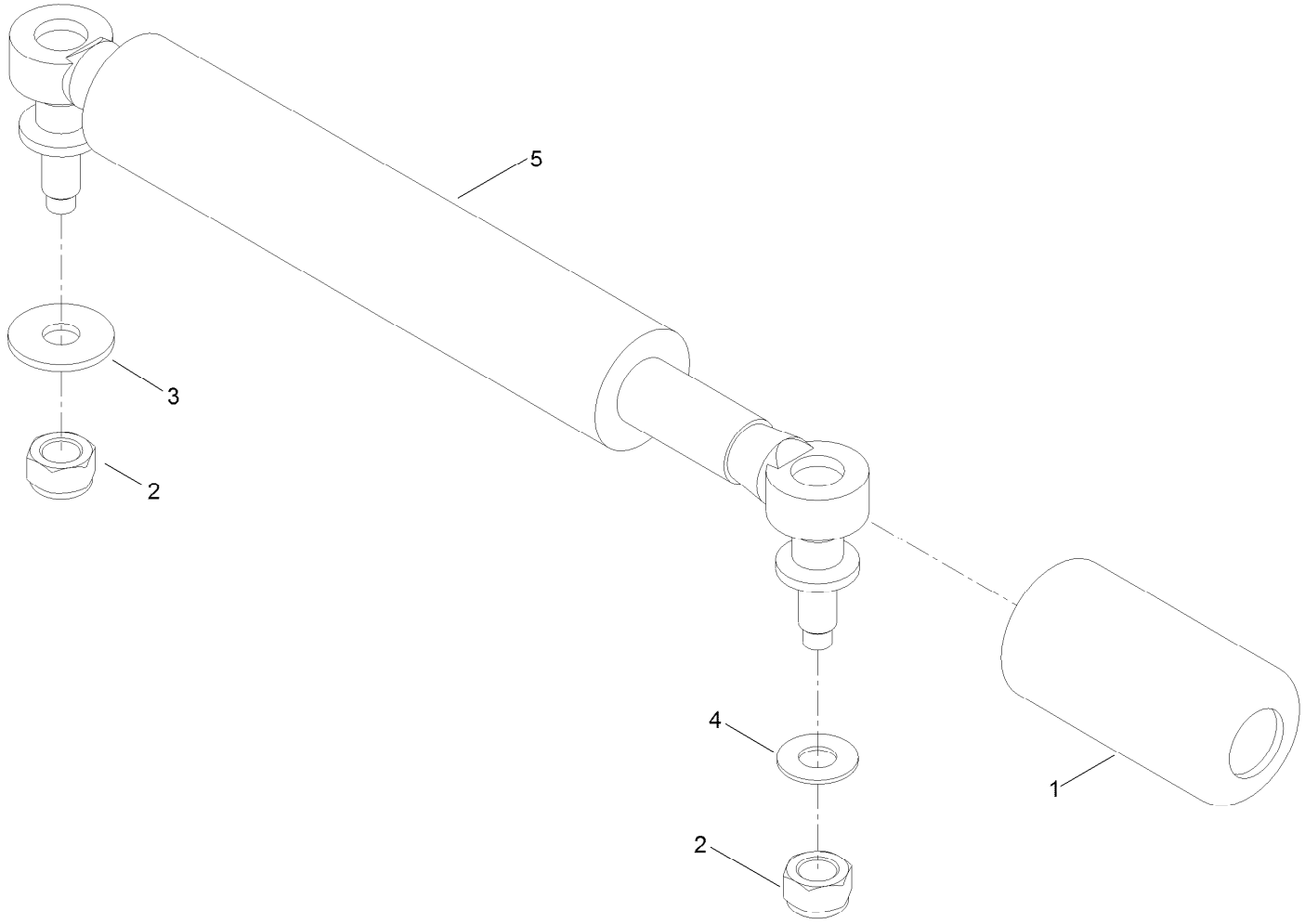

Damper Kit Assembly No. 111-9548 (continued)

Ref.	Part Number	Qty.	Description
1	111-9774	1	Sleeve-Rubber
2	09441	2	Nut-Hex, NI
3	09267	1	Washer-Plain
4	09475	1	Washer
5	111-8425	1	Damper
99	74-07-020	1	Tie-Cable ●

● Not illustrated

Hydraulic Pump Assembly No. 111-8723

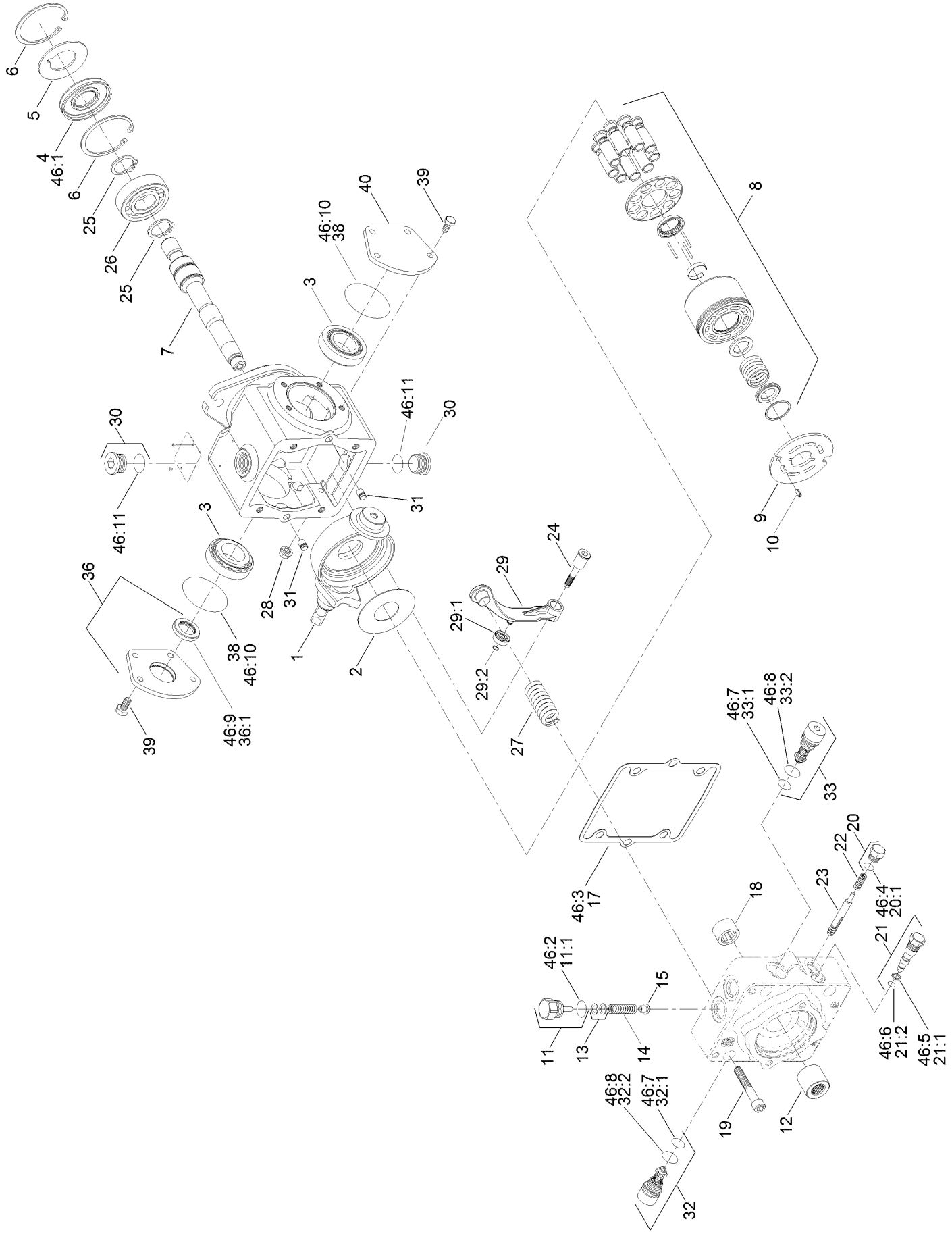

Hydraulic Pump Assembly No. 111-8723 (continued)

Ref.	Part Number	Qty.	Description
1	115-8092	1	Swashplate
2	75-0400	1	Plate-Thrust
3	110-6483	2	Bearing Kit
4	110-6471	1	Seal-Lip
5	95-4400	1	Washer-Backup
6	69-3200	2	Ring-Retaining
7	111-9640	1	Shaft-Auxiliary
8	110-6472	1	Cylinder Block Kit ASM
9	110-6473	1	Plate-Valve (Clockwise)
10	131-3800	1	Pin-Slotted
11	110-6486	1	Plug-Relief, Charge
11:1	28-3570	1	O-Ring
12	111-9641	1	Coupling
13	111-4908	1	Shim Kit ASM
14	110-6474	1	Spring
15	110-6475	1	Poppet
17	110-6476	1	Gasket-Cap, End
18	75-0500	1	Bearing-Needle
19	110-6489	4	Screw
20	94-9415	1	Plug ASM
20:1		1	O-Ring ■
21	107-4364	1	Bypass Valve ASM
21:1	25-2630	1	Ring-Back Up
21:2	110-6498	1	O-Ring
22	111-4917	2	Spring-Valve, Loop (Flushing)
23	110-6492	1	Spool-Loop, Flush
24	110-6493	1	Pivot-Return, Neutral
25	69-3170	2	Ring-Retaining
26	75-0460	1	Bearing-Ball
27	110-6495	1	Spring-Return, Neutral
28	110-6496	1	Nut-Seal
29	110-6497	1	Neutral Return Arm ASM
29:1	110-6494	1	Bearing-Cam
29:2	110-3056	1	Ring-Retaining
30	69-3130	2	Plug
31	112-0158	2	Pin
32	110-6477	1	Valve-Relief
32:1	75-0240	1	O-Ring
32:2	84-0560	1	O-Ring
33	111-6775	1	Valve-Pressure Relief, 300 Bar
33:1	111-4906	1	O-Ring
33:2	111-4925	1	O-Ring
36	110-6499	1	Trunnion Cover ASM
36:1	110-6478	1	Seal-Lip
38	84-0430	2	O-Ring
39	112-0151	8	Screw
40	84-0450	1	Cover-Trunnion
46	110-6481	1	Seal Kit ●
46:1	110-6471	1	Seal-Lip
46:2	28-3570	1	O-Ring
46:3	110-6476	1	Gasket-Cap, End
46:4	131-8631	2	O-Ring
46:5	25-2630	1	Ring-Back Up
46:6	110-6498	1	O-Ring
46:7	75-0240	2	O-Ring
46:8	84-0560	2	O-Ring
46:9	110-6478	1	Seal-Lip
46:10	84-0430	2	O-Ring
46:11	131-8614	2	O-Ring

● Not illustrated

■ Not serviced separately

Hose Kit Assembly 111-8449

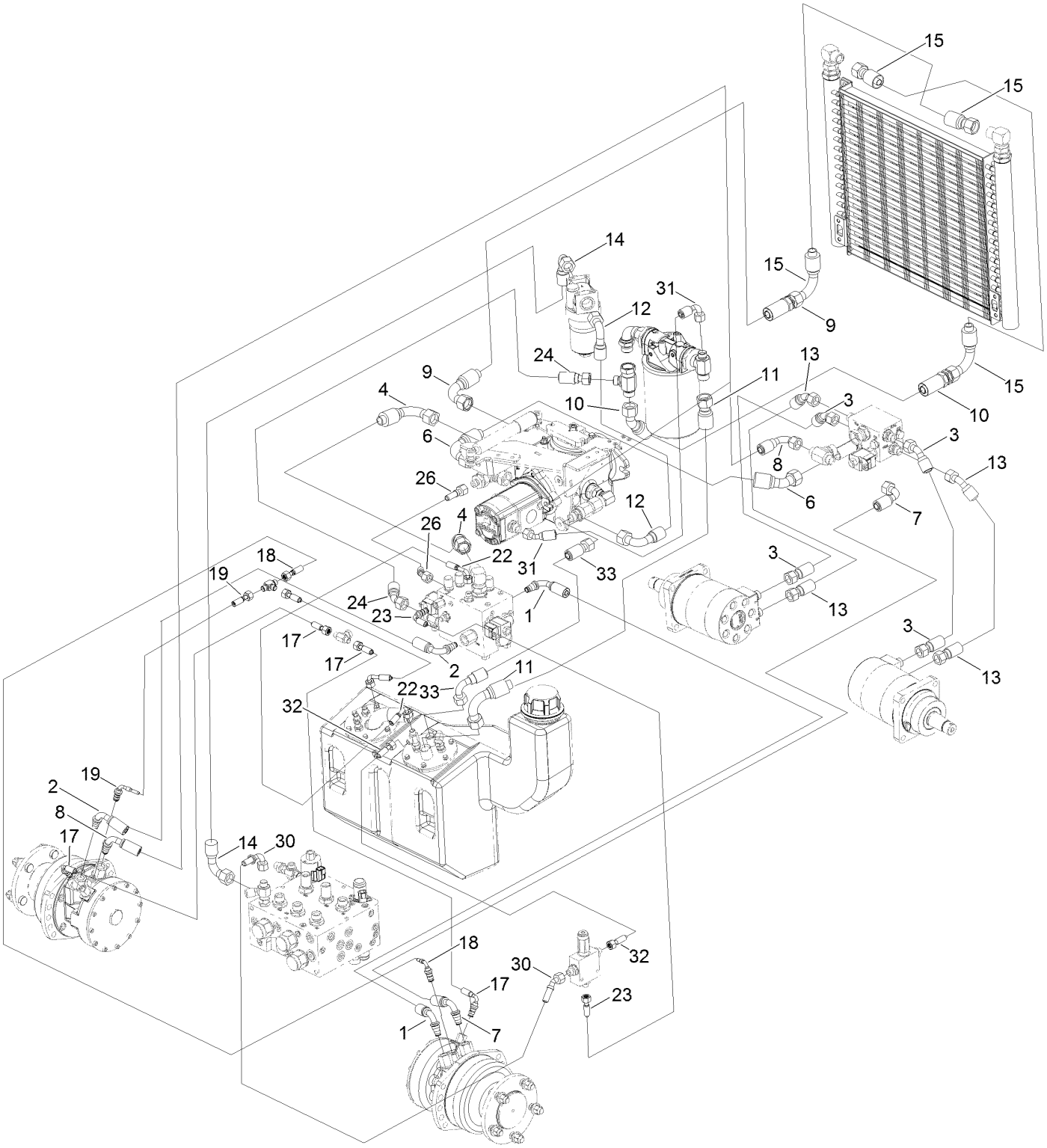

Hose Kit Assembly 111-8449 (continued)

Ref.	Part Number	Qty.	Description
1	111-4473	1	Hose
2	111-4474	1	Hose
3	111-3576	2	Hose
4	111-4475	1	Hose
6	111-9765	1	Hose
7	111-9204	1	Hose
8	111-9205	1	Hose
9	111-9199	1	Hose
10	111-9202	1	Hose
11	111-9203	1	Hose
12	111-9188	1	Hose
13	111-3595	2	Hose
14	111-6950	1	Hose
15	111-9206	2	Hose
17	111-4483	2	Hose
17:3:1	134-0279	1	O-Ring ●

Ref.	Part Number	Qty.	Description
18	111-3606	1	Hose
18:3:1	134-0279	1	O-Ring ●
19	111-9271	1	Hose
19:3:1	134-0279	1	O-Ring ●
22	111-6163	1	Hose
23	111-9207	1	Hose
23:2		1	Coupling-Straight ■ ●
23:2:1	134-0279	1	O-Ring ●
24	111-9183	1	Hose
26	111-4485	1	Hose
30	111-9200	1	Hose
31	111-9201	1	Hose
32	111-9196	1	Hose
32:2		1	Coupling-Straight ● ■
32:2:1	134-0279	1	O-Ring ●
33	111-9209	1	Hose

● Not illustrated

■ Not serviced separately

Hose Kit Assembly 111-8448

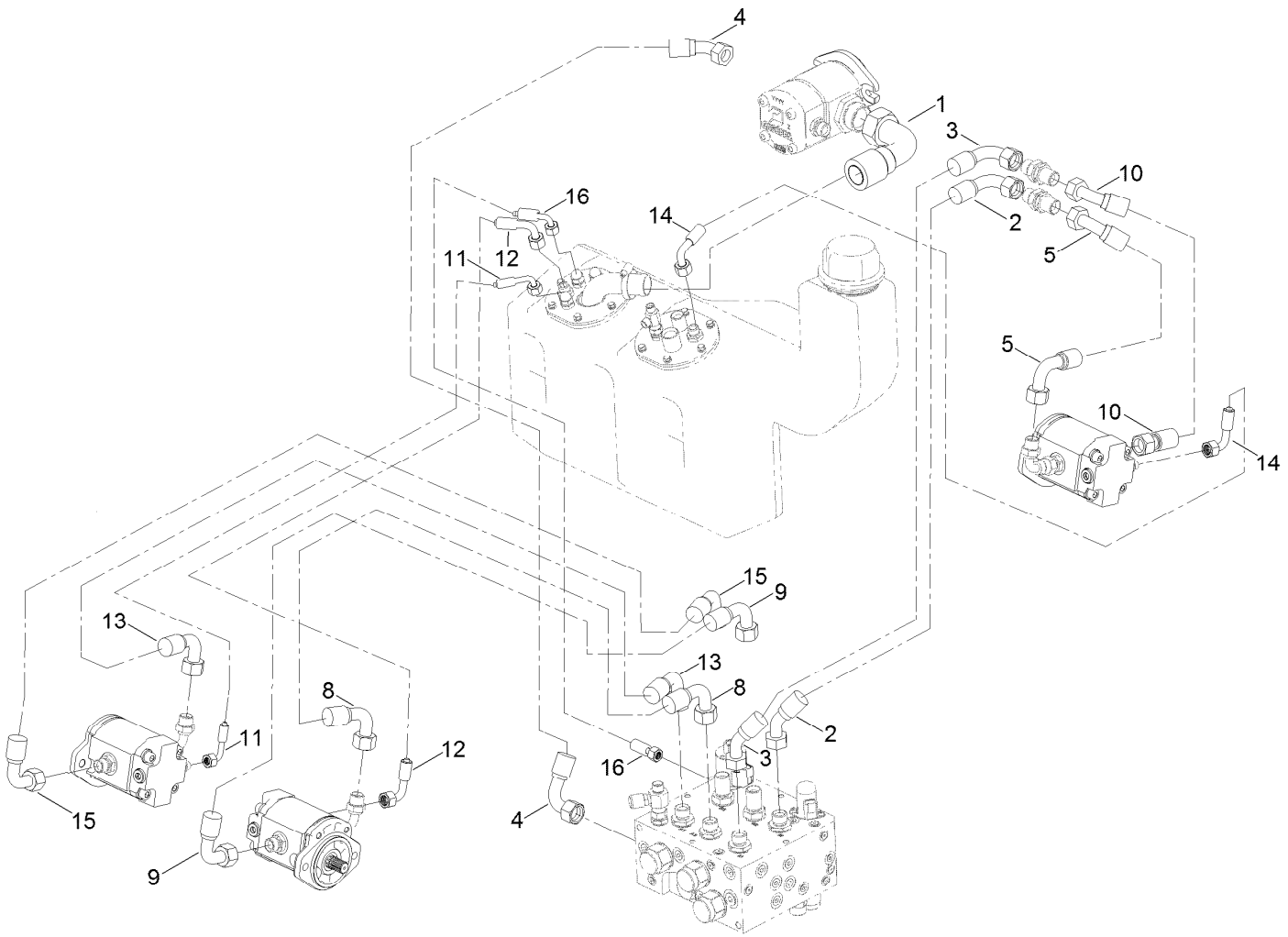

Hose Kit Assembly 111-8448 (continued)

Ref.	Part Number	Qty.	Description
1	111-5486	1	Hose
2	111-9193	1	Hose
3	111-9192	1	Hose
4	111-9191	1	Hose
5	111-9189	1	Hose
8	111-9184	1	Hose
9	111-9185	1	Hose
10	111-9190	1	Hose
11	111-9324	1	Hose
12	111-9830	1	Hose
13	111-9187	1	Hose
14	111-9829	1	Hose
15	111-9186	1	Hose
16	111-9325	1	Hose
16:2		1	Coupling-Straight ■ ●
16:2:1	134-0279	1	O-Ring ●

● Not illustrated

■ Not serviced separately

Lift Hydraulic Hose Routing Assembly

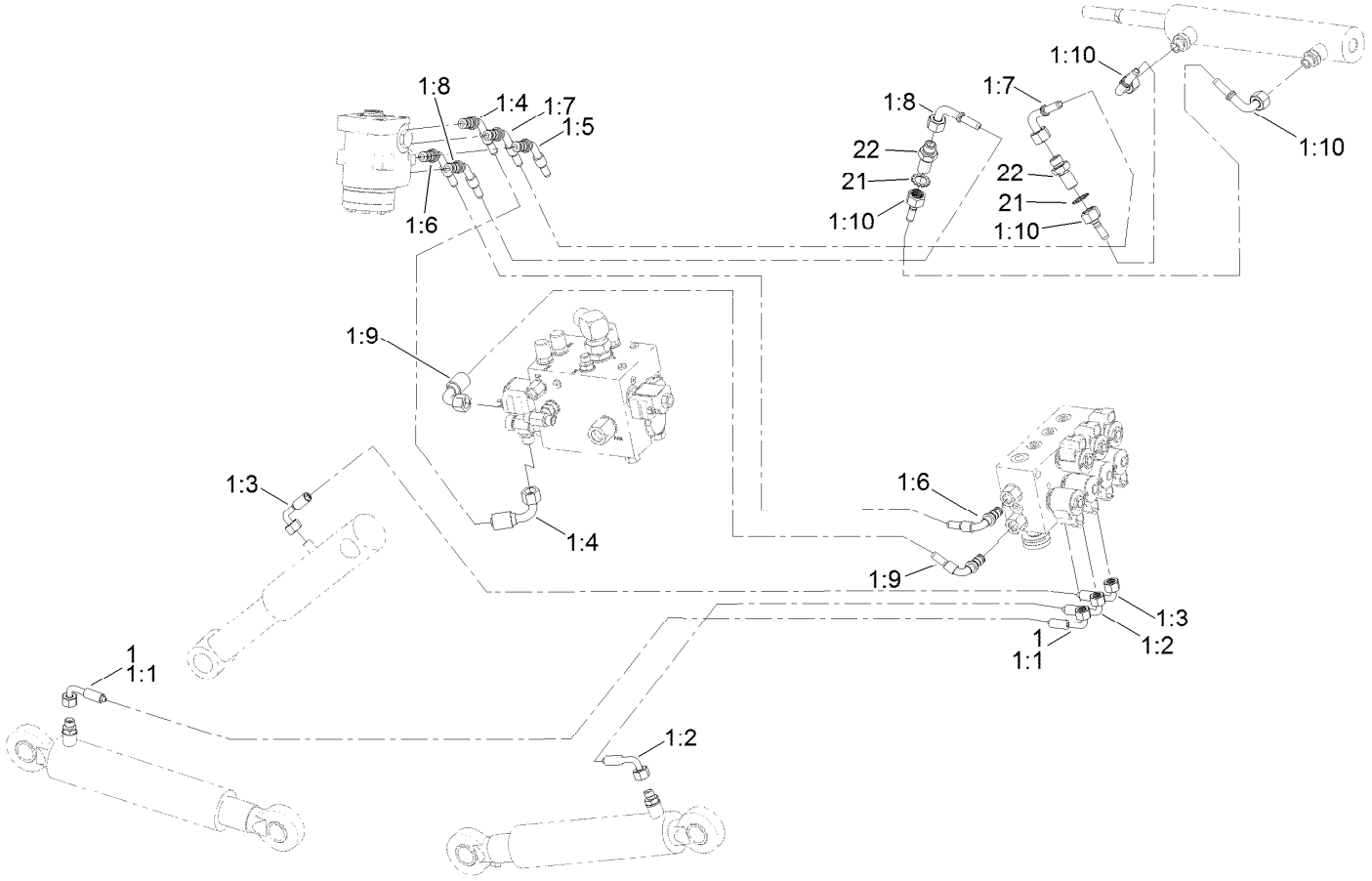

Lift Hydraulic Hose Routing Assembly (continued)

Ref.	Part Number	Qty.	Description
1		1	Hosekit Assembly ■
1:1	111-3602	1	Hose
1:2	111-3603	1	Hose
1:3	111-3611	1	Hose
1:4	111-3613	1	Hose
1:5	111-3614	1	Hose
1:6	111-3615	1	Hose

Ref.	Part Number	Qty.	Description
1:6:5	111-3509	2	Adaptor ●
1:7	111-7538	1	Hose
1:8	111-7539	1	Hose
1:9	111-3618	1	Hose
1:10	111-7537	2	Hose
21	111-5622	2	Washer-Lock, Serrated
22	30-06-208	2	Adaptor

● Not illustrated

■ Not serviced separately

Filter Assembly

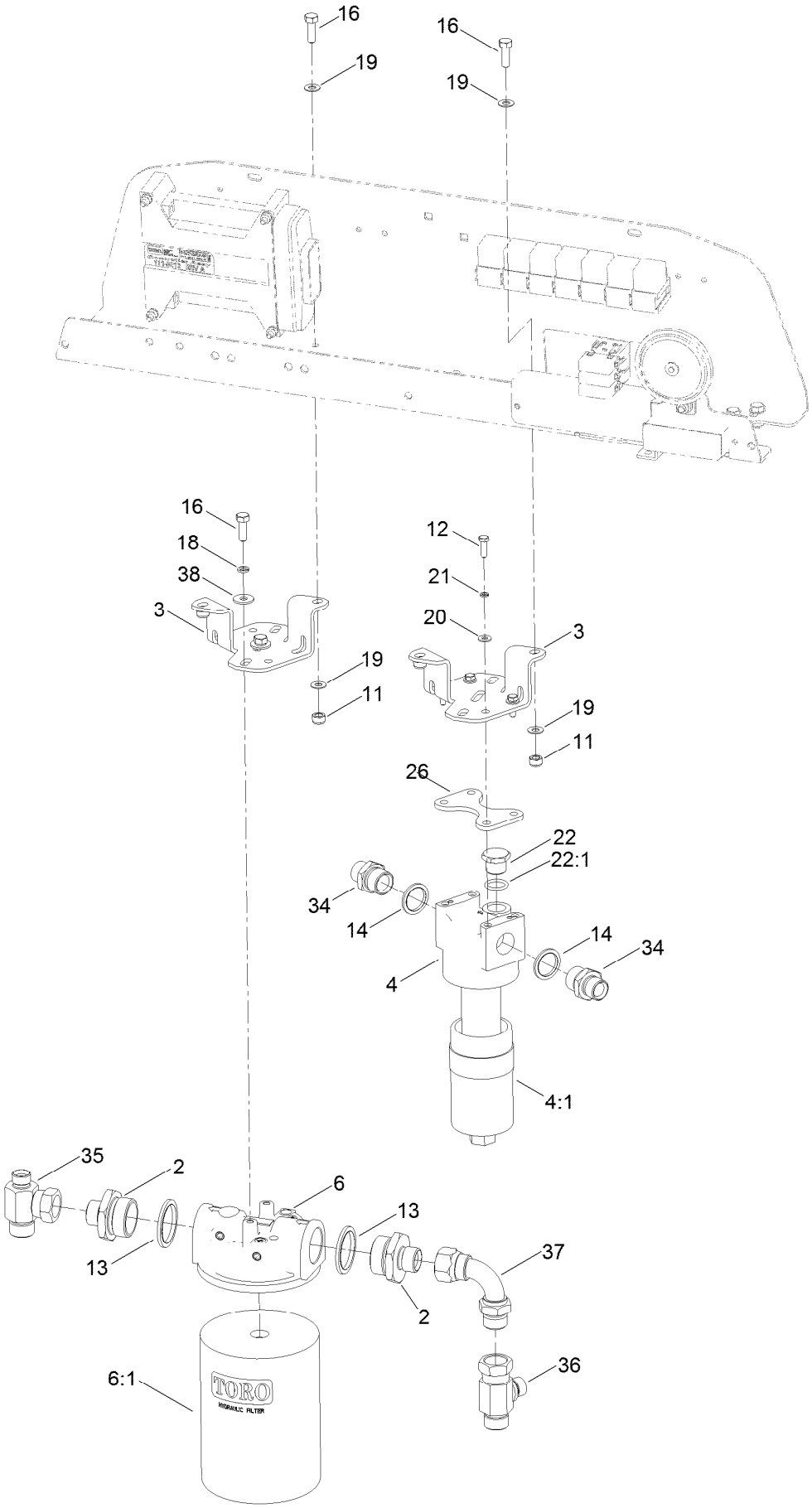

Filter Assembly (continued)

Ref.	Part Number	Qty.	Description
2	25-06-050	2	Adaptor
3	111-9856-03	2	Bracket, Filter-Return
4	924708	1	Pressure Filter ASM
4:1	924709	1	Element-Filter, Pressure
4:2	924710	1	Indicator-Filter, Pressure ●
6	111-7508	1	Return Filter ASM
6:1	924692	1	Element-Filter
11	09441	4	Nut-Hex, NI
12	09363	4	Screw-HH
13	10-06-035	2	Seal-Dowty
14	10-06-033	2	Seal-Dowty
16	03162	4	Screw-HH
17	09368	2	Screw-HH ●

Ref.	Part Number	Qty.	Description
18	03469	2	Washer-Spring
19	09475	8	Washer
20	09261	4	Washer-Plain
21	09474	4	Washer-Spring
22	111-3926	1	Plug
22:1	63-06-111	1	Seal-O Ring
26	111-4843-03	1	Spacer-Oil Filter
34	994626	2	Adaptor-BSPP
35	111-9110	1	Fitting-Tee
36	111-9112	1	Fitting-Tee
37	111-9113	1	Fitting-Elbow-90
38	09267	2	Washer-Plain

● Not illustrated

Hydraulic Manifold Assembly

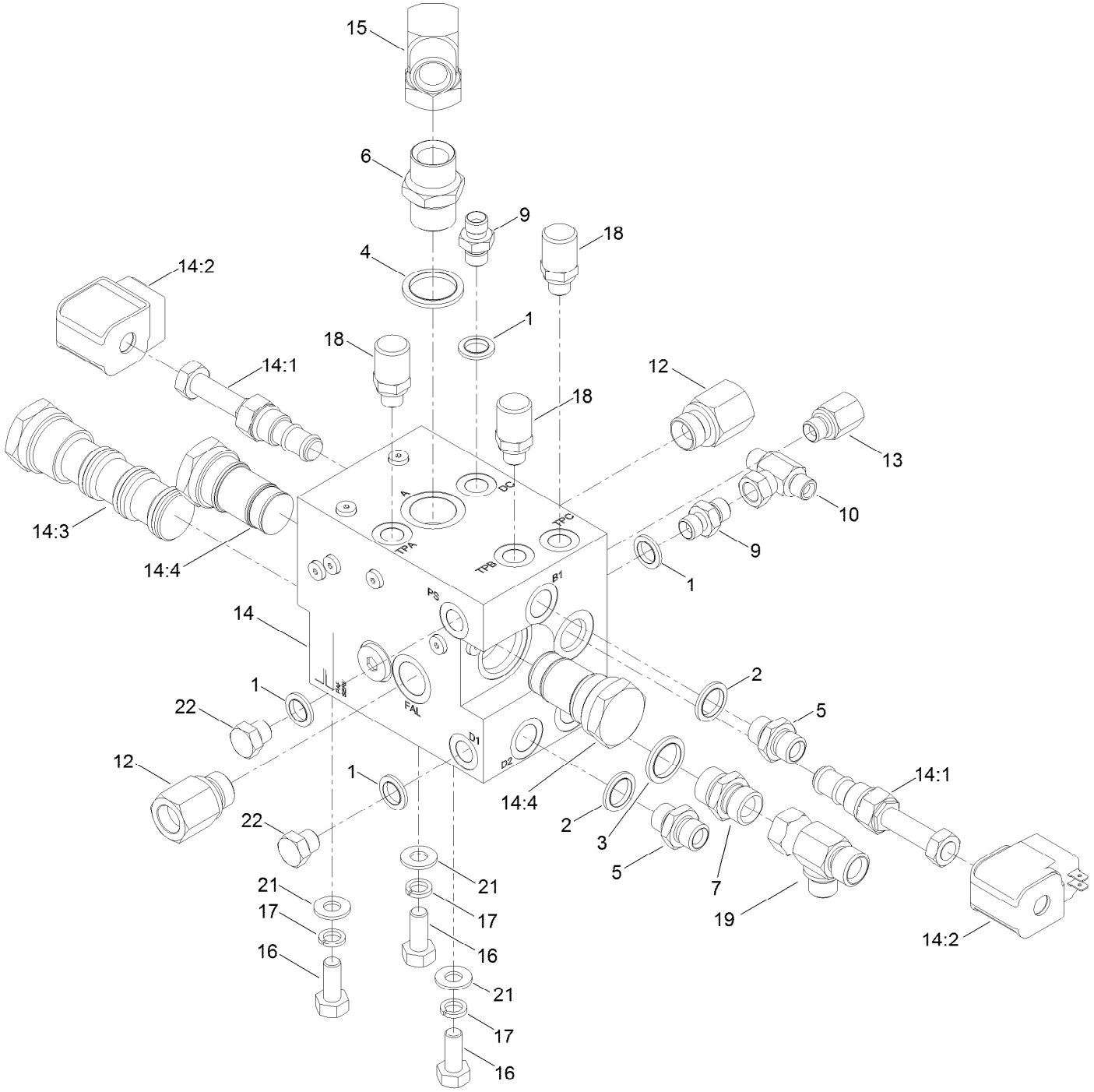

Hydraulic Manifold Assembly (continued)

Ref.	Part Number	Qty.	Description
1	10-06-030	4	Seal-Dowty
2	10-06-031	2	Seal-Dowty
3	10-06-032	1	Seal-Dowty
4	10-06-033	1	Seal-Dowty
5	10-06-042	2	Adaptor-BSPP
6	10-06-044	1	Adaptor-BSP
7	10-06-078	1	Adaptor-BSPP
9	10-06-085	2	Adaptor
10	60-06-011	1	Tee-BSP
12	111-3529	2	Adaptor
13	111-3538	1	Adaptor
14	111-3993	1	Manifold-Front, Transmission
14:1	111-3533	2	Valve-Solenoid
14:1:1	134-0258	1	Seal Kit ●
14:2	910627	2	Coil-Solenoid
14:3	111-4466	1	Valve-Flow, Divider/Combiner
14:3:1	111-7188	1	Seal Kit ●
14:4	111-4467	2	Valve-Diverter
14:4:1	134-0259	1	Seal Kit ●
14:7	106-1024	10	Plug-Leak, Zero ●
14:8	106-1027	1	Plug ●
14:99	910629	1	Valve-Shuttle ●
14:99:1	910635	1	Seal Kit ●
15	111-4443	1	Elbow-BSP
16	09395	3	Screw-HH
17	09480	3	Washer-Lock
18	910615	3	Point-BSPP
19	953732	1	Tee-BSP
21	ZWQ1J000U	3	Washer-Plain
22	30-06-200	2	Plug-HYD

● Not illustrated

Cutter Manifold Assembly

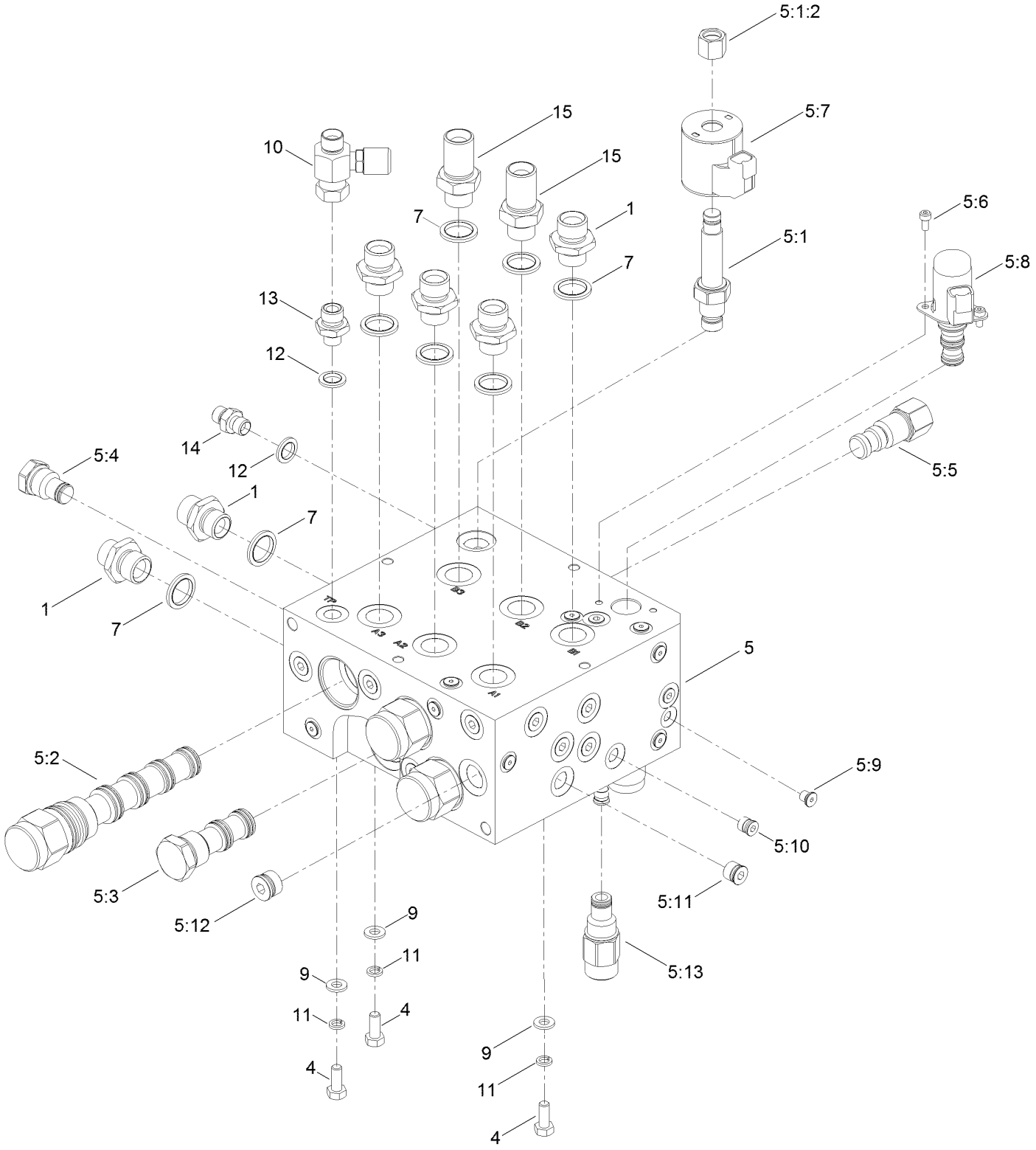

Cutter Manifold Assembly (continued)

Ref.	Part Number	Qty.	Description
1	950726	6	Adaptor-BSP
4	09368	3	Screw-HH
5	111-8420	1	Manifold-Control, Cutters
5:1	111-6825	1	Pressure-Proportional, Relief Valve
5:1:1	111-6826	1	Seal Kit ●
5:1:2	130-8180	1	Nut-Coil (9/16-24 Unef-2B)
5:2	111-6829	3	Valve-Spool, Piloted
5:2:1	111-6830	1	Seal Kit ●
5:3	111-8421	1	Plug-Cavity
5:3:1	110-6111	1	Seal Kit ●
5:4	111-8422	1	Plug-Cavity
5:4:1	107-7813	1	Seal Kit ●
5:5	111-6832	1	Logic Element-Vented
5:5:1	111-6827	1	Seal Kit ●
5:6	115-8733	6	Screw-HSH
5:7	119-4619	1	Coil-Solenoid
5:8	125-7554	3	Valve-Solenoid
5:8:1	125-7561	1	Seal Kit ●
5:9	106-1024	14	Plug-Leak, Zero
5:10	106-1025	7	Plug-HYD
5:11	106-1026	14	Plug-HYD
5:12	106-1027	2	Plug
5:13	111-9763	2	Plug-Cavity
5:13:1	107-7813	1	Seal Kit ●
7	10-06-032	8	Seal-Dowty
9	ZWP1H000U	3	Washer-Plain
10	111-9118	1	Fitting-Test
11	03469	3	Washer-Spring
12	10-06-030	2	Seal-Dowty
13	50-06-009	1	Adaptor-BSP
14	10-06-085	1	Adaptor
15	111-9517	2	Fitting-Straight

● Not illustrated

Manifold Hydraulic Assembly

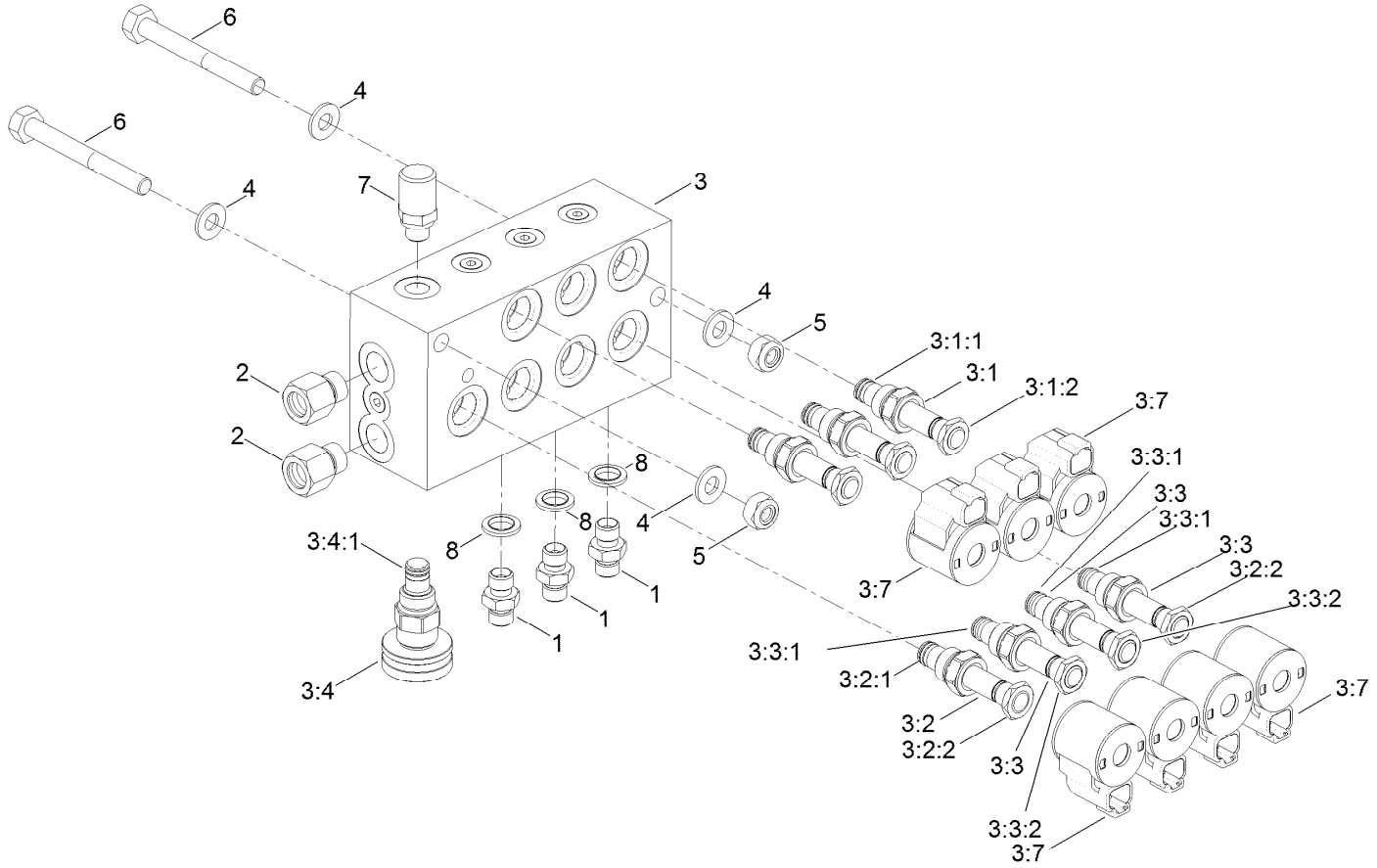

Manifold Hydraulic Assembly (continued)

Ref.	Part Number	Qty.	Description
1	10-06-085	3	Adaptor
2	111-3509	2	Adaptor
3	111-8419	1	Manifold-Control, Lift
3:1	111-9623	3	Valve-Solenoid
3:1:1	107-7527	1	Seal Kit
3:1:2	110-2634	1	Nut-Coil
3:2	111-9624	1	Valve-Solenoid
3:2:1	105-9156	1	Seal Kit
3:2:2	107-7812	1	Nut-Solenoid
3:3	112-9206	3	Solenoid Valve ASM
3:3:1	105-9156	1	Seal Kit
3:3:2	110-2634	1	Nut-Coil
3:4	111-5513	1	Valve-Needle, Weight
3:4:1	107-7527	1	Seal Kit
3:5	111-9625	3	Orifice-Flow, Control ●
3:6	106-1025	4	Plug-HYD ●
3:7	112-0197	7	E Coil-12V DC
4	ZWQ1J000U	4	Washer-Plain
5	ZNN1J000U	2	Nut-Hex, NI
6	ZBH1J090U	2	Screw-HH
7	910615	1	Point-BSPP
8	10-06-030	3	Seal-Dowty

● Not illustrated

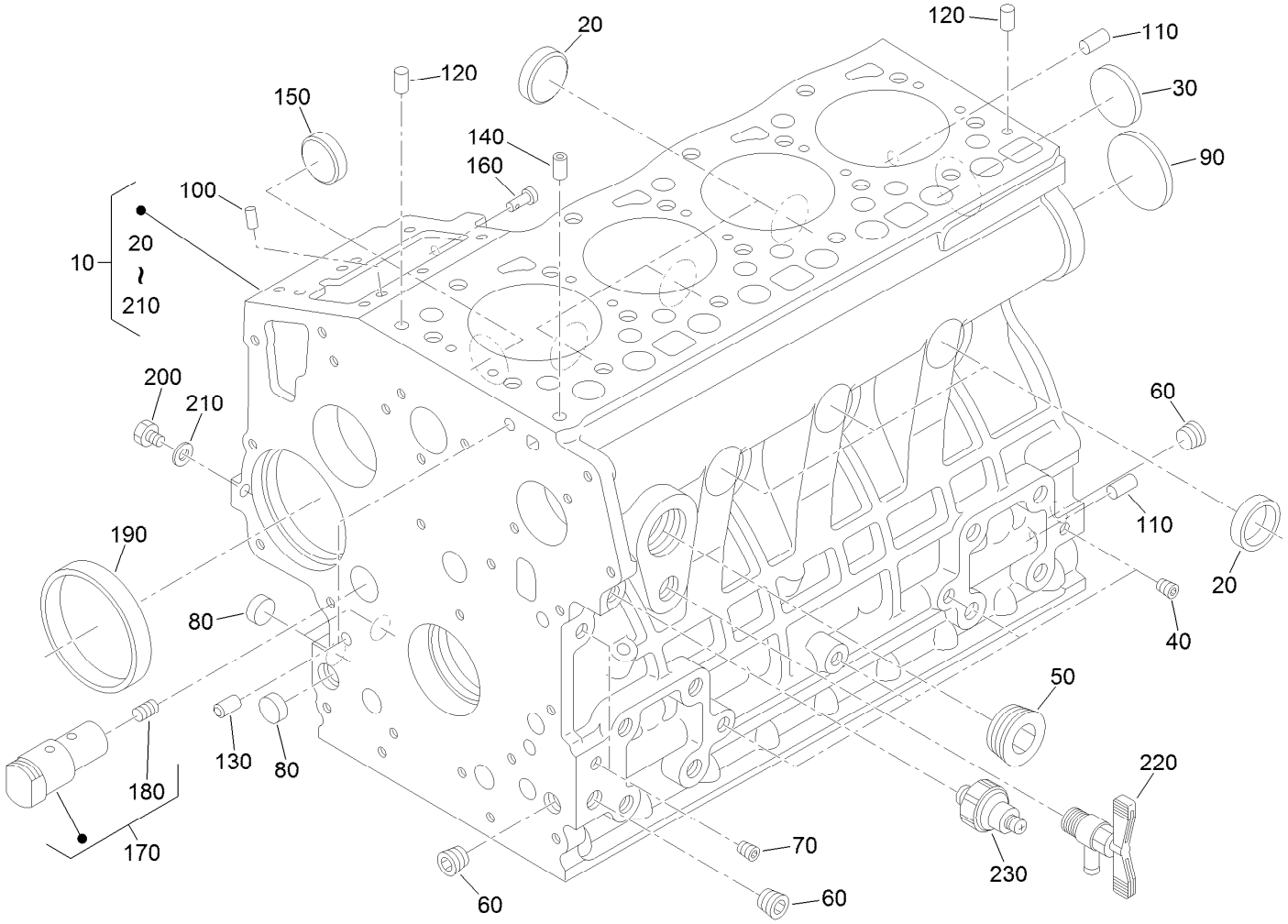

Crankcase Assembly

Ref.	Part Number	Qty.	Description
10	131-3832	1	Crankcase ASM
20	98-9398	6	Cap-Sealing
30	98-7539	1	Cap-Sealing
40	98-9687	4	Plug
50	99-8347	1	Joint-Pipe, Drain
60	98-9597	3	Plug
70	98-7487	2	Plug
80	98-9379	3	Plug-Expansion
90	98-9668	1	Plug-Expansion
100	98-9375	2	Pin-Straight
110	98-9377	2	Pin-Straight
120	98-9376	2	Pin-Straight

Ref.	Part Number	Qty.	Description
130	98-9387	2	Pin-Pipe
140	98-9539	1	Pin-Pipe
150	98-9599	1	Plug
160	105-3796	1	Pin-Spring, Start
170	130-1237	1	Idler Shaft ASM
180	98-7449	1	Screw-Set
190	98-9656	1	Bushing-Governor, Gear
200	120-2559	1	Plug
210	98-7428	1	Gasket
220	120-3121	1	Draincock ASM
230	98-7764	1	Switch-Oil

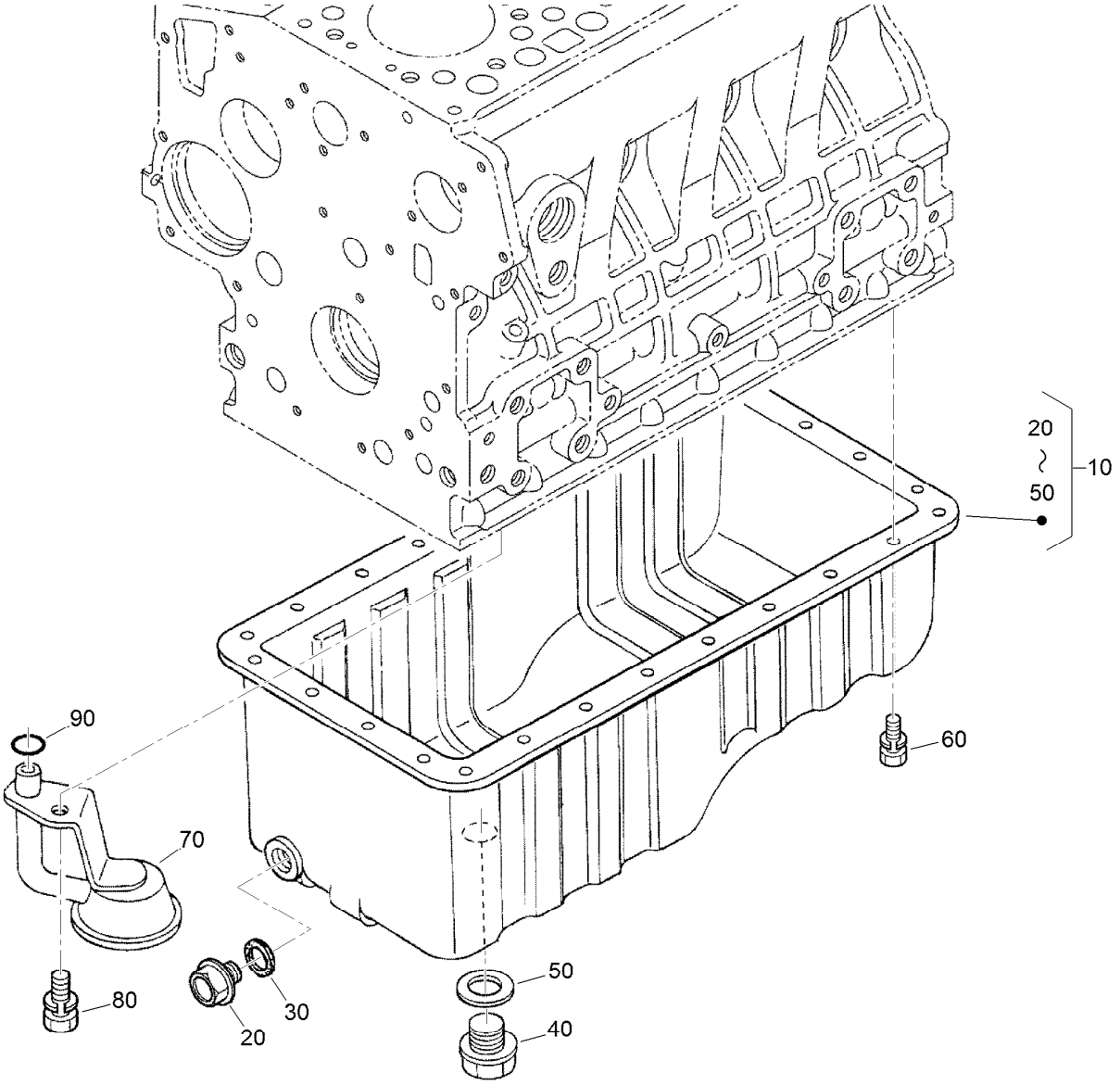

Oil Pan Assembly

Ref.	*Part Number*	*Qty.*	*Description*
10	130-1283	1	Oil Pan Kit
20	114-8151	1	Plug-Drain
30	AU87421317	1	Washer-Seal
40	105-3703	1	Plug-Drain
50	110-9715	1	Gasket-Pan, Oil
60	98-9351	26	Bolt
70	115-4116	1	Filter-Oil
80	98-7526	1	Bolt
90	105-3776	1	O-Ring

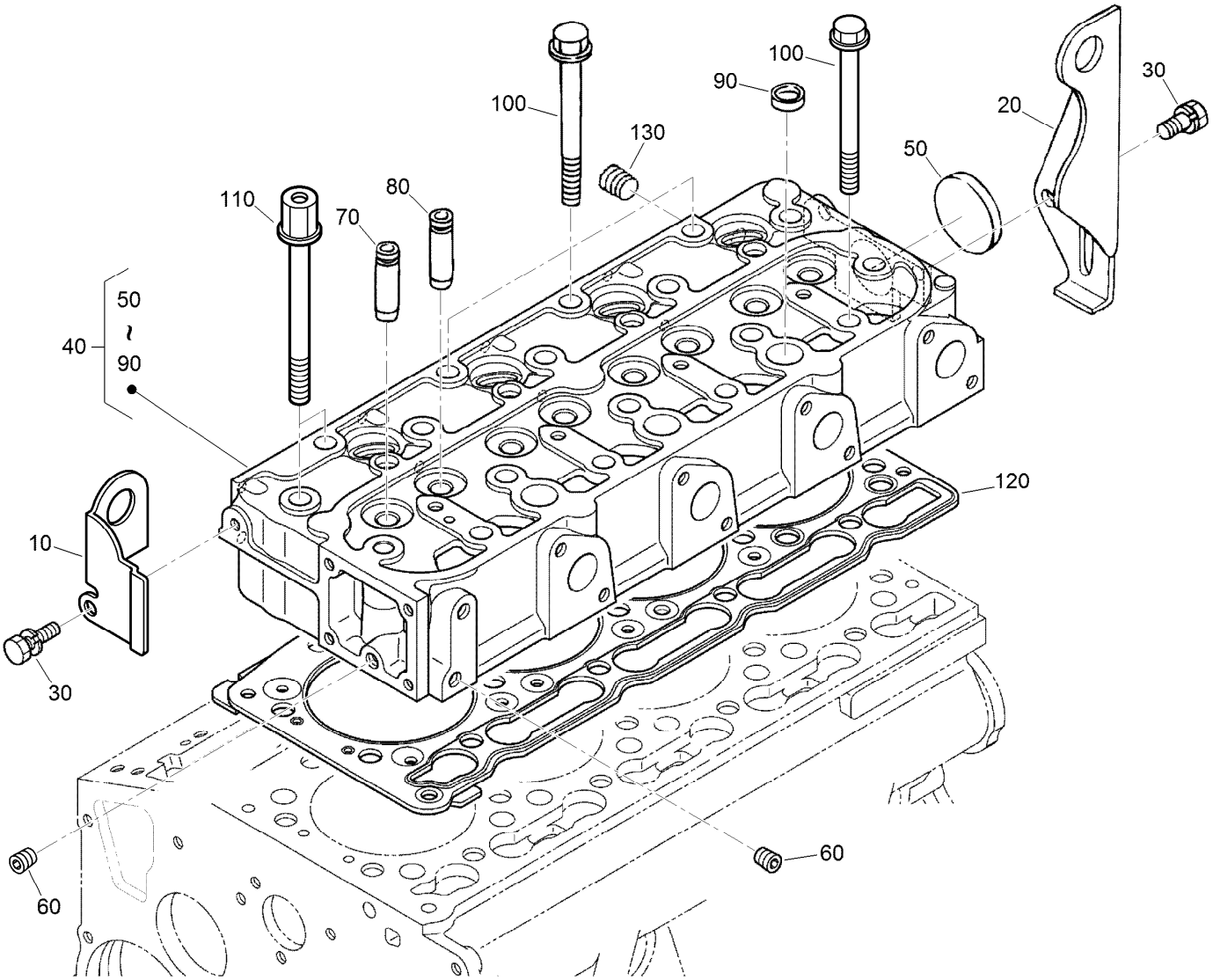

Cylinder Head Assembly

Ref.	Part Number	Qty.	Description
10	130-1231	1	Hook-Engine
20	98-9478	1	Hook-Engine
30	100-9195	2	Bolt
40	130-1382	1	*obs* Cylinder Head ASM
50	105-3705	1	Cap-Sealing
60	98-9687	2	Plug
70	107-9066	4	Guide-Valve, Inlet
80	107-9067	4	Guide-Valve, Exhaust
90	98-9389	3	Cap-Sealing
100	98-9479	15	Bolt-Head, Cylinder
110	98-9647	3	Bolt-Head, Cylinder
120	127-0434	1	Gasket-Head, Cylinder
130	98-9444	1	Plug

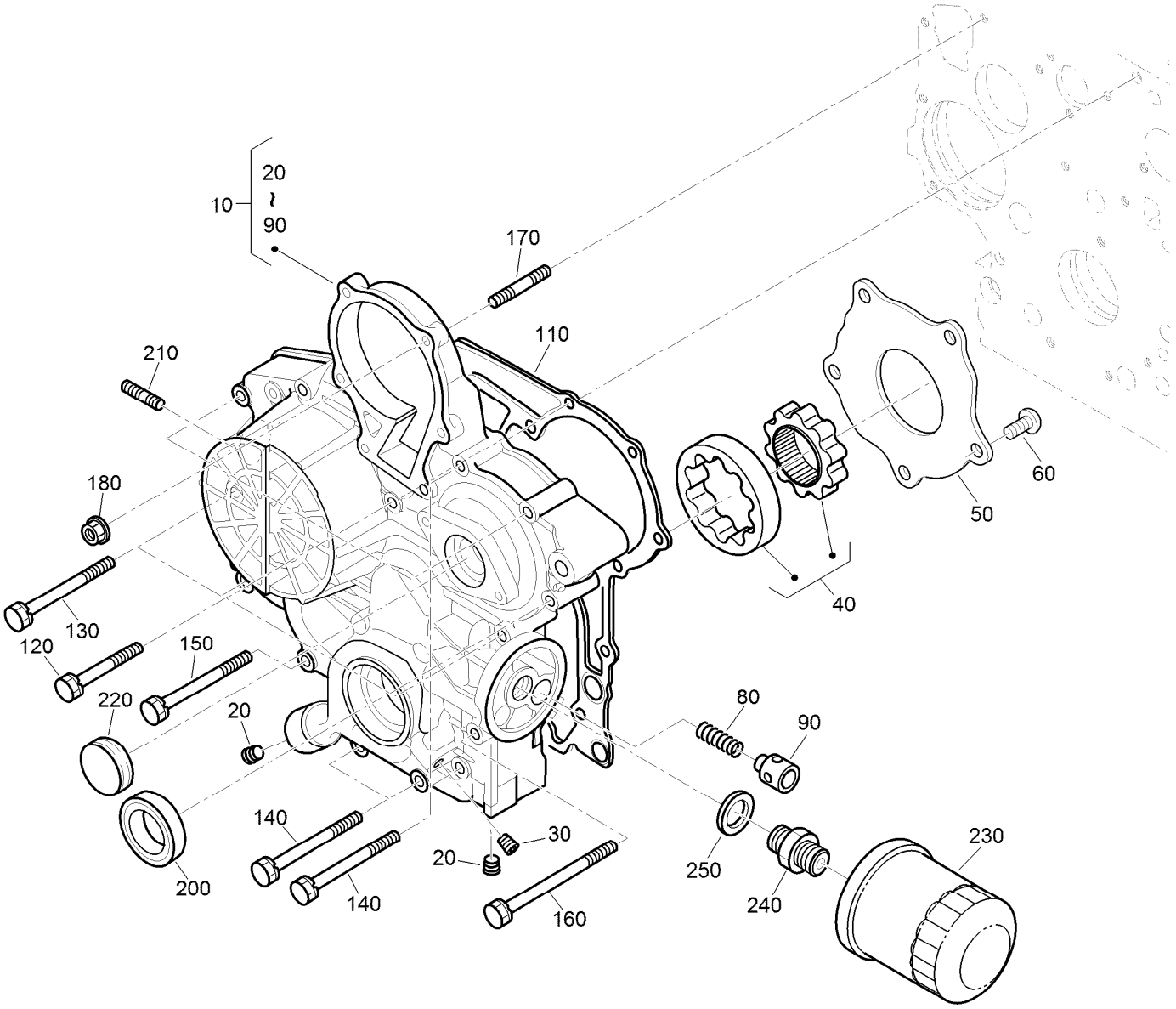

Gear Case and Oil Filter Cartridge Assembly

Ref.	Part Number	Qty.	Description
10	131-3833	1	Gear Case ASM
20	127-0425	2	Plug
30	98-7487	1	Plug
40	130-1508	1	Rotor ASM
50	130-1509	1	Cover-Pump, Oil
60	130-1164	5	Screw-Binding
80	130-1511	1	Spring
90	130-1510	1	Valve-Relief
110	98-9633	1	Gasket-Case, Gear
120	100-1765	3	Bolt
130	125-9063	4	Bolt-Sems
140	98-9356	4	Bolt
150	107-9074	1	Bolt
160	99-3510	1	Bolt
170	105-3709	1	Stud
180	100-2203	1	Nut-Flange
200	119-8038	1	Seal-Oil
210	105-3710	2	Stud
220	99-3515	1	Plug-Gearcase
230	127-0511	1	Filter-Oil
240	104-5159	1	Holder ASM
250	98-9727	1	Collar

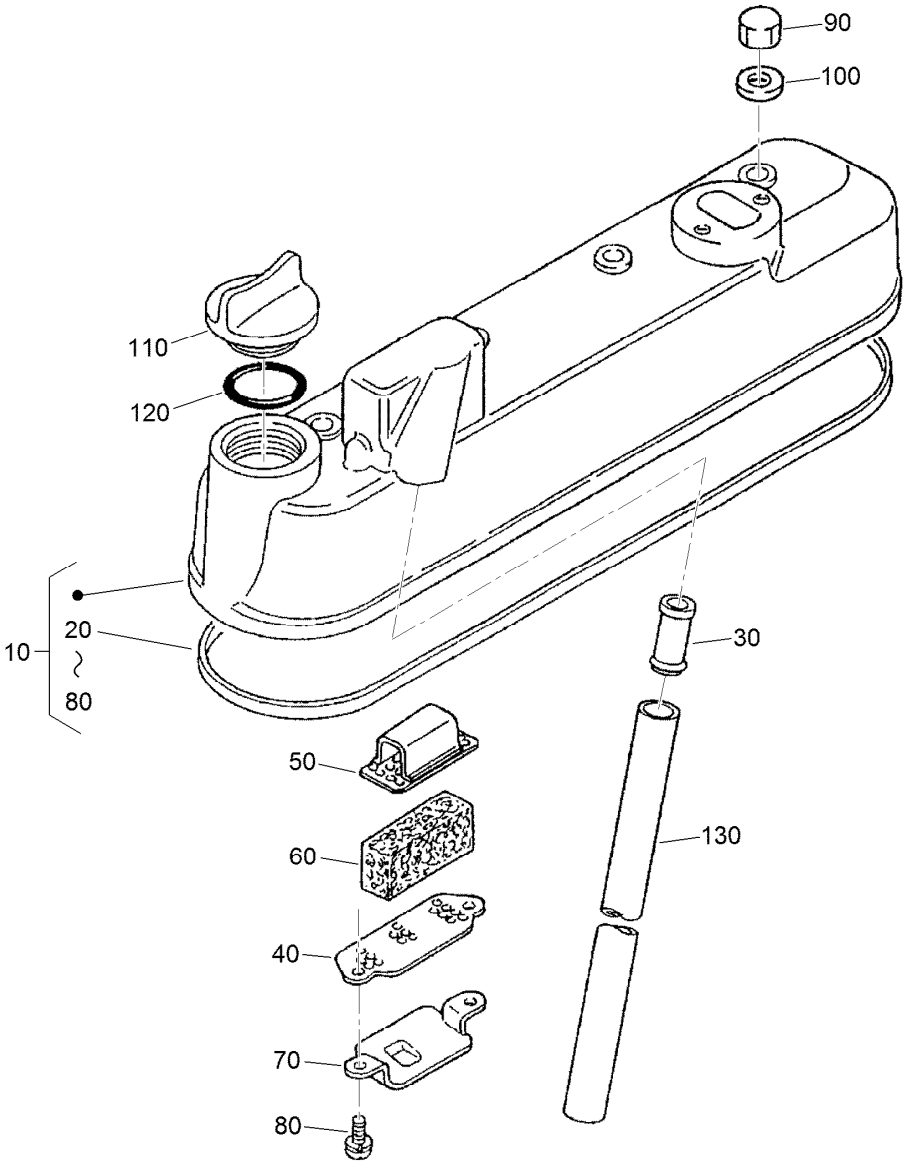

Cylinder Head Cover Assembly

Ref.	*Part Number*	*Qty.*	*Description*
10	105-3711	1	Cylinder Head Cover ASM
20	105-3712	1	Gasket-Cover, Head
30	98-9492	1	Joint-Pipe, Breather
40	98-9488	1	Plate-Element, Breather
50	98-9489	1	Plate-Element, Breather
60	98-9493	1	Element-Breather
70	98-9490	1	Shield-Oil, Breather
80	98-9364	2	Screw (With Washer)
90	98-9455	4	Nut-Cap
100	98-9454	4	Gasket
110	107-9075	1	Plug-Filler, Oil
120	131-3834	1	O Ring
130	98-9491	1	Pipe-Breather

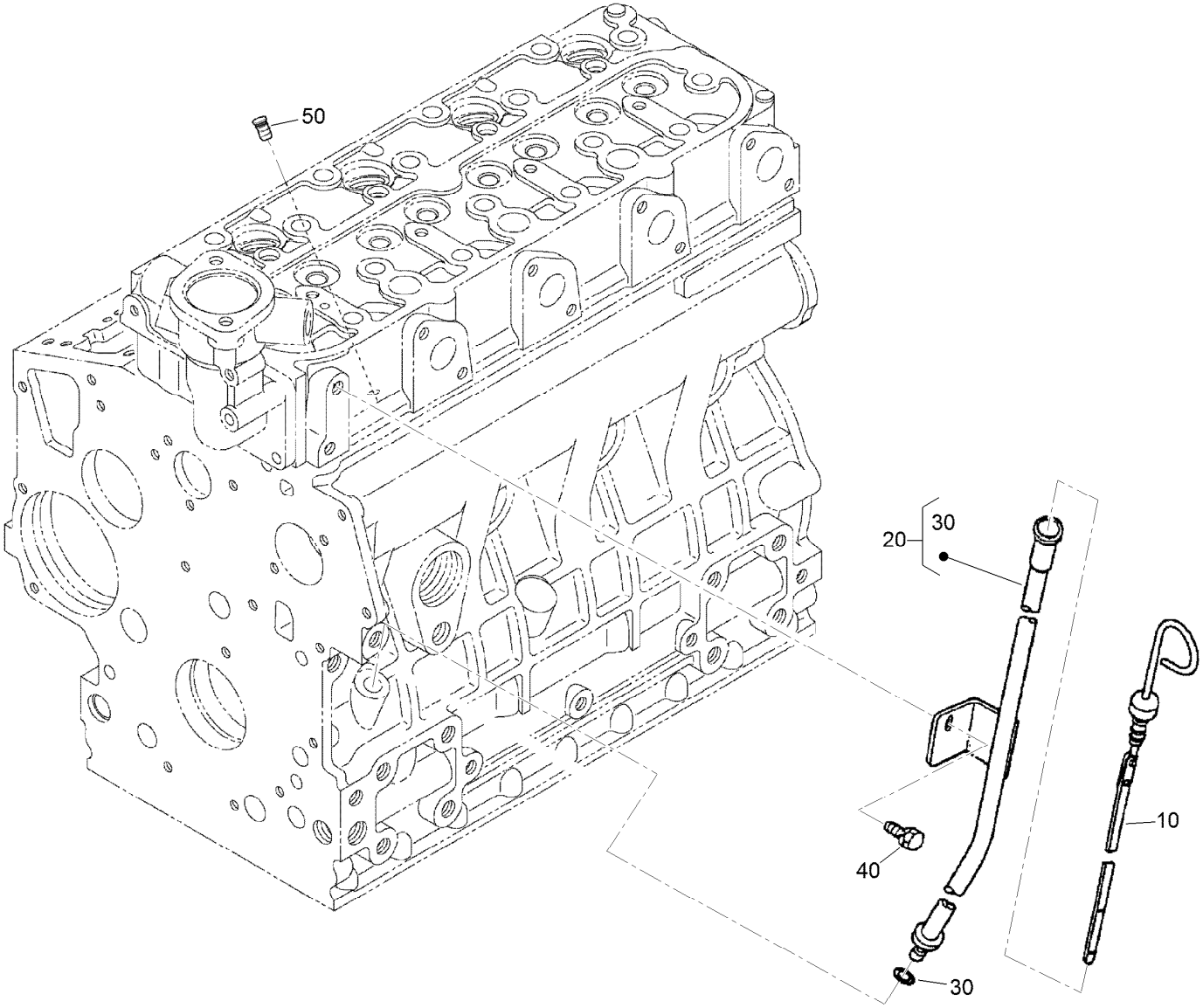

Oil Dipstick and Guide Assembly

Ref.	*Part Number*	*Qty.*	*Description*
10	120-3124	1	Gauge-Oil
20	98-9672	1	Oil Gauge Guide ASM
30	98-9722	1	O-Ring
40	AU126123A1	1	Bolt
50	110-3720	1	Plug-Gauge, Oil

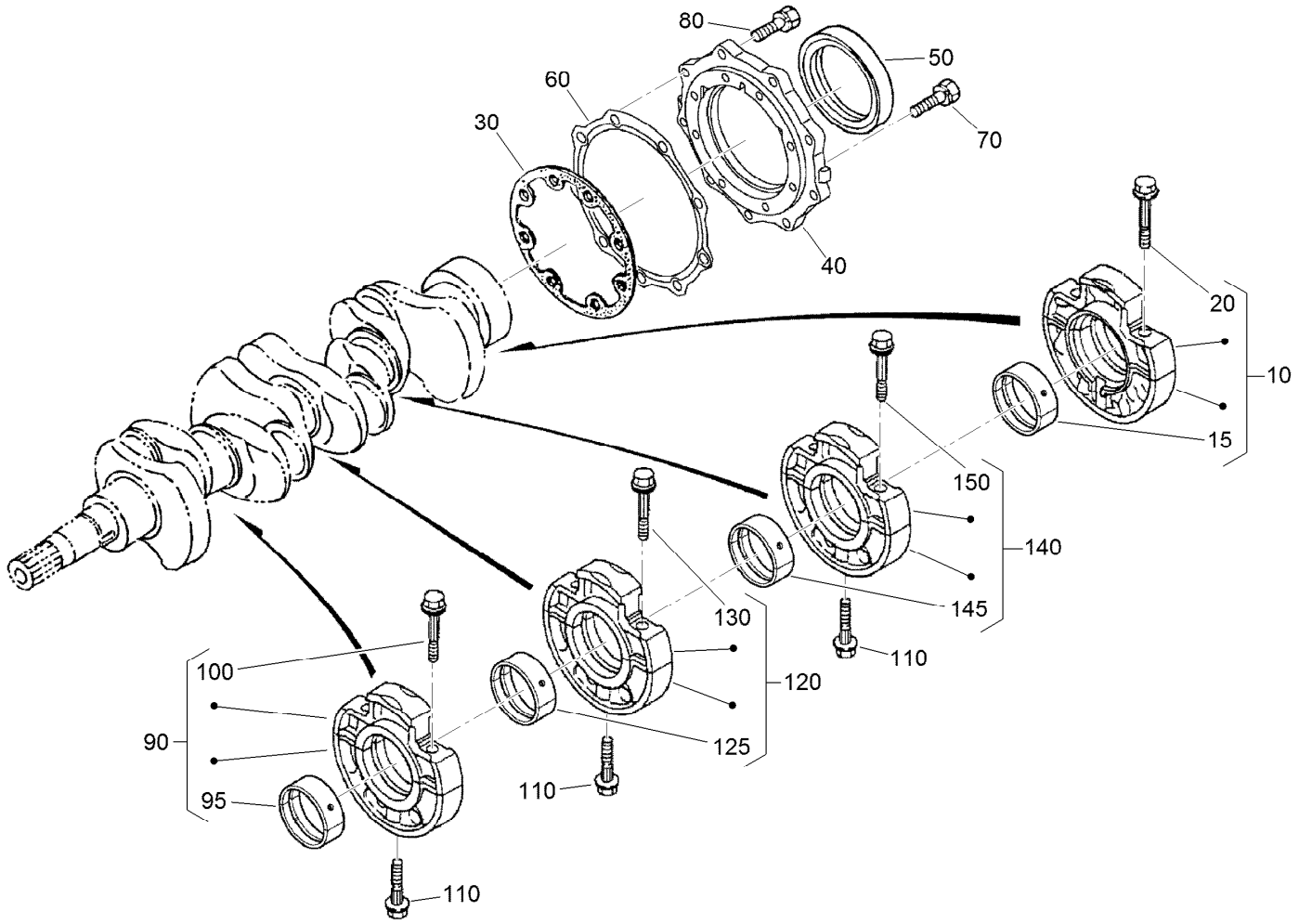

Main Bearing Case Assembly

Ref.	Part Number	Qty.	Description
10	112-7026	1	Wheel Bearing Case ASM
15	115-4121	1	Metal-Crankshaft (STD)
20	98-9484	2	Bolt-Case, Bearing
30	131-6554	1	Gasket-Case, Bearing
40	112-7046	1	Cover-Case, Bearing
50	112-0180	1	Seal-Oil
60	112-7037	1	Gasket-Cover, Case
70	127-0441	8	Bolt
80	127-0442	9	Bolt
90	131-3835	1	Bearing Case ASM

Ref.	Part Number	Qty.	Description
95	98-9524	1	Metal-Crankshaft (STD Set)
100	98-9484	2	Bolt-Case, Bearing
110	98-9485	3	Bolt-Case, Bearing
120	131-3836	1	Bearing Case ASM
125	98-9524	1	Metal-Crankshaft (STD Set)
130	98-9484	2	Bolt-Case, Bearing
140	131-3837	1	Bearing Case ASM
145	98-9524	1	Metal-Crankshaft (STD Set)
150	98-9484	2	Bolt-Case, Bearing

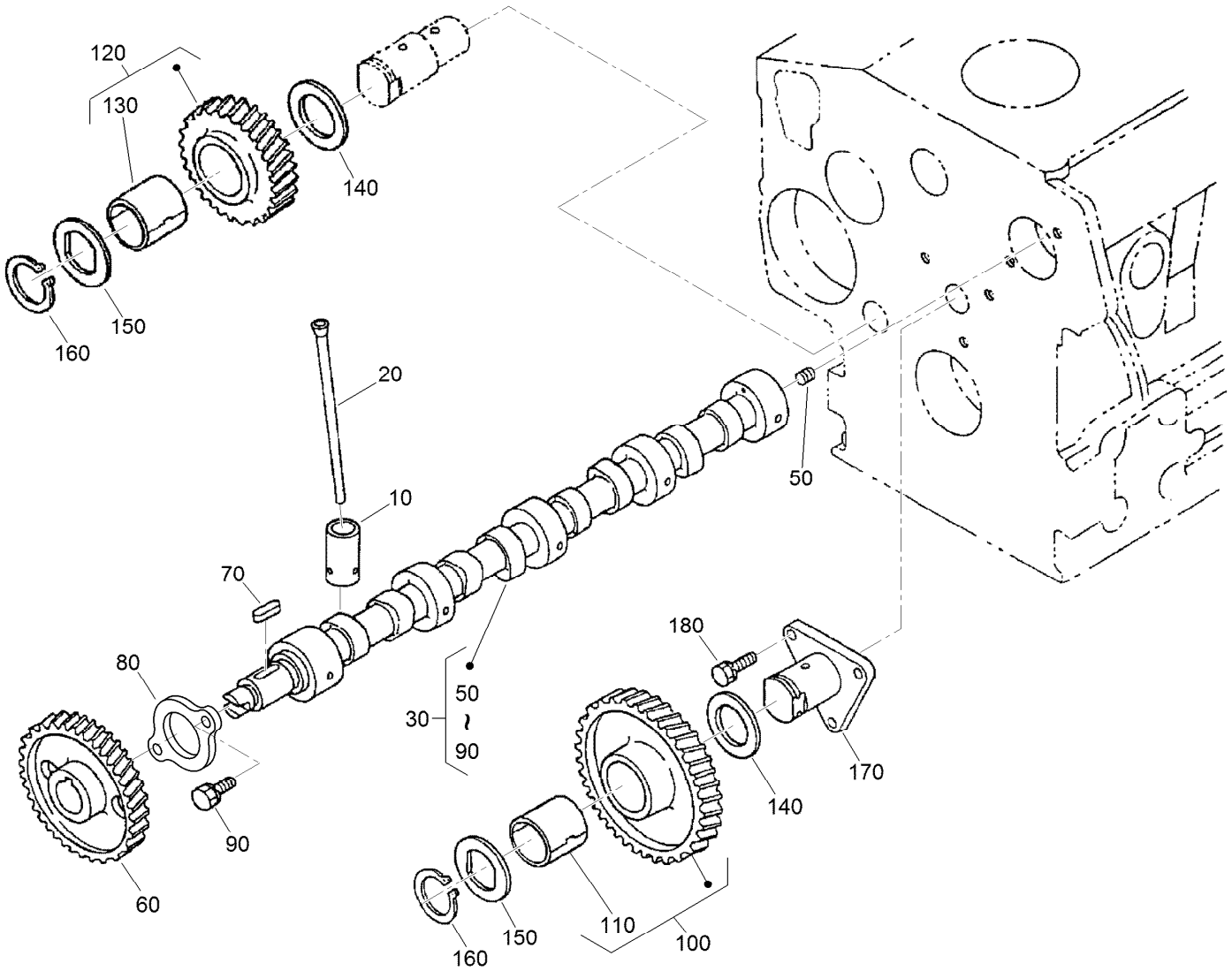

Cam Shaft and Idle Gear Assembly

Ref.	Part Number	Qty.	Description
10	112-0185	8	Tappet
20	127-0421	8	Rod-Push
30	112-8402	1	Camshaft ASM
50	110-3729	1	Ball
60	98-9512	1	Gear-Cam
70	98-9378	1	Key-Feather
80	131-6555	1	Stopper (Camshaft)
90	98-7692	2	Bolt
100	117-7584	1	Idler Gear ASM

Ref.	Part Number	Qty.	Description
110	117-7585	1	Bushing-Gear, Idle
120	130-1259	1	Idler Gear ASM
130	117-7585	1	Bushing-Gear, Idle
140	98-9535	2	Collar-Gear, Idle
150	98-9536	2	Collar-Gear, Idle
160	98-9534	2	Circlip-Gear, Idle
170	98-9533	1	Shaft-Gear, Idle
180	98-7692	3	Bolt

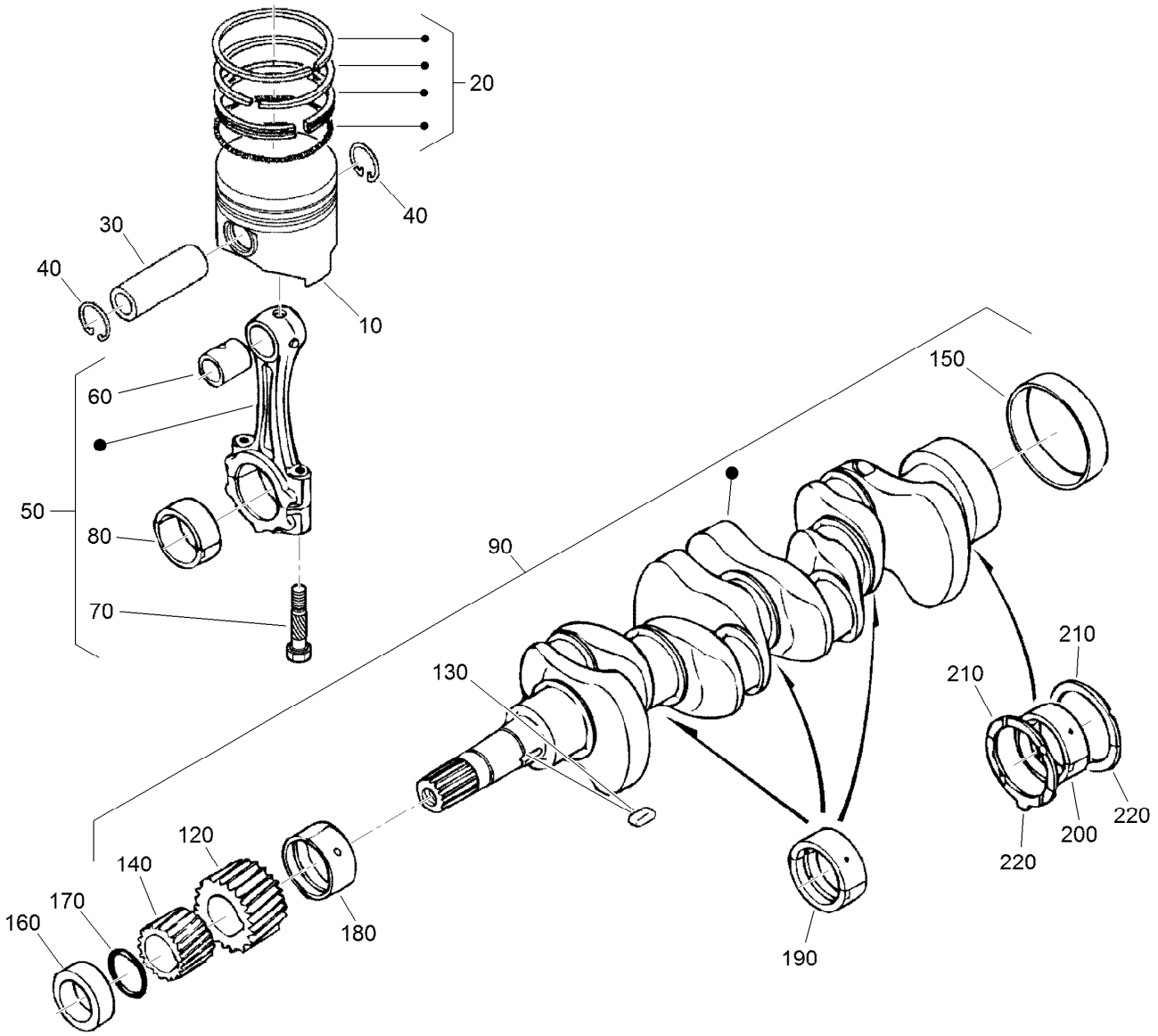

Piston and Crankshaft Assembly

Ref.	Part Number	Qty.	Description
10	98-9550	4	Piston (STD)
10	108-1417	1	Piston (+0.5Mm)
20	98-9551	4	Piston Ring ASM (STD)
20	108-1404	1	Piston Ring ASM (+0.5Mm)
30	98-9513	4	Pin-Piston
40	98-9514	8	Circlip-Pin, Piston
50	117-7586	4	Connecting Rod ASM
60	115-3014	4	Bushing-Pin, Piston
70	98-9517	8	Bolt-Rod, Connecting
80	98-9553	4	Bearing-Rod (STD)
80	98-9519	1	Bearing-Rod (-0.2Mm)
80	117-7588	1	Metal-Crankpin (-0.4Mm)
90	120-2561	1	Crankshaft ASM
120	117-7561	1	Gear-Crankshaft
130	98-9666	1	Key
140	127-0445	1	Gear-Drive, Oil Pump
150	98-9522	1	Sleeve-Crankshaft

Ref.	Part Number	Qty.	Description
160	127-0444	1	Collar-Crankshaft
170	105-3783	1	O-Ring
180	112-7005	1	Bearing-Main (STD)
180	98-9528	1	Bearing-Main (-0.2Mm)
180	127-0432	1	Metal-Crankshaft (-0.4Mm)
190	98-9524	3	Metal-Crankshaft (STD Set)
190	127-0433	3	Metal-Crankshaft (-0.2Mm)
190	98-9531	3	Bearing-Main (0.4Mm)
200	115-4121	1	Metal-Crankshaft (STD)
200	112-7039	1	Metal-Crankshaft (0.2Mm)
200	112-7040	1	Metal-Crankshaft (-0.4Mm)
210	98-9413	2	Bearing-Thrust (STD)
210	127-0416	1	Metal-Side (+0.2Mm)
210	127-0417	1	Metal-Side (+0.40Mm)
220	98-9688	2	Bearing-Thrust (STD)
220	127-0437	1	Metal-Side (+0.2Mm)
220	127-0438	1	Metal-Side (+0.40Mm)

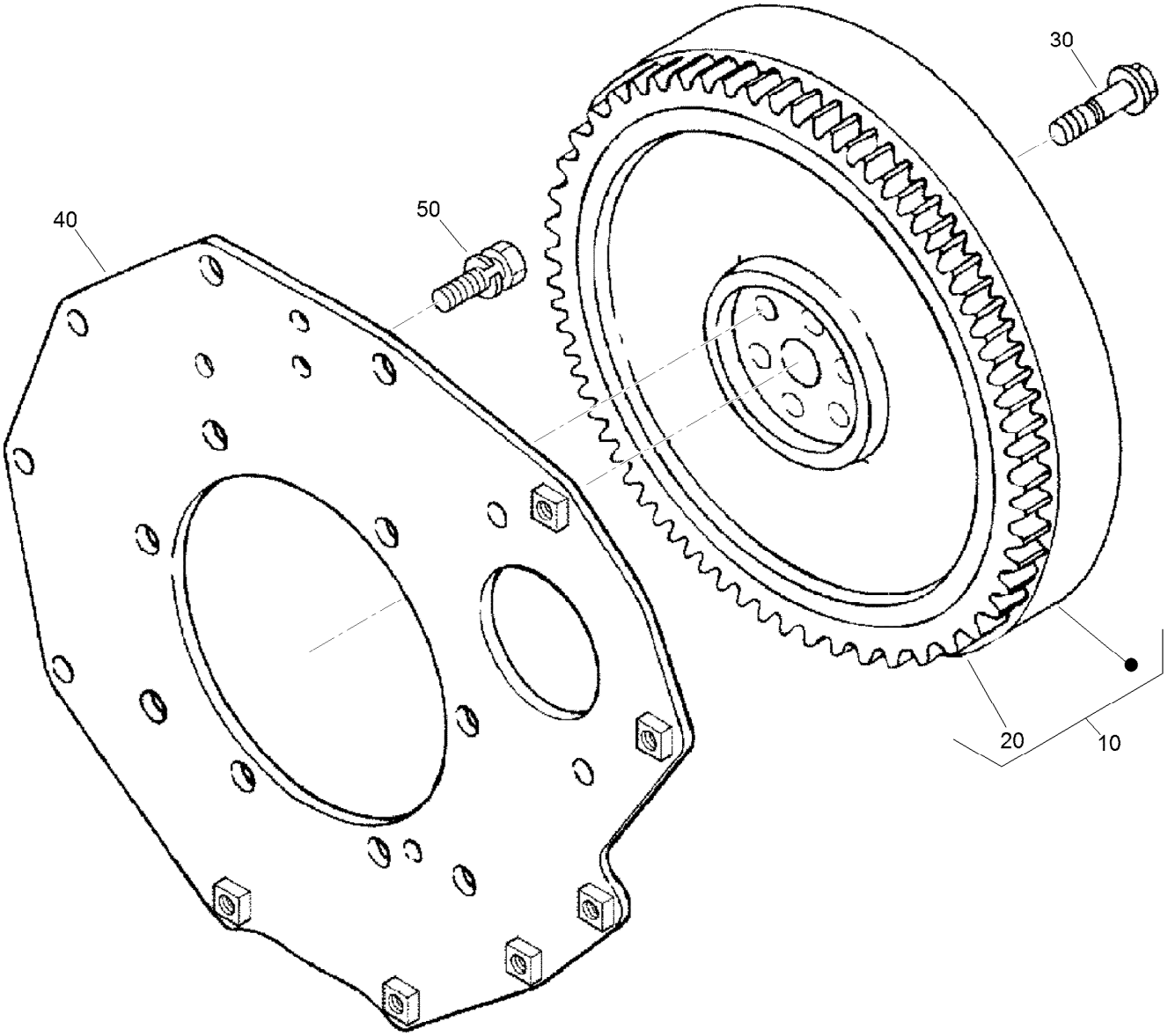

Flywheel Assembly

Ref.	Part Number	Qty.	Description
10	105-3721	1	Flywheel ASM
20	115-3015	1	Gear-Ring
30	98-9537	6	Bolt-Flywheel
40	98-9486	1	Plate-End, Rear
50	98-9392	8	Bolt

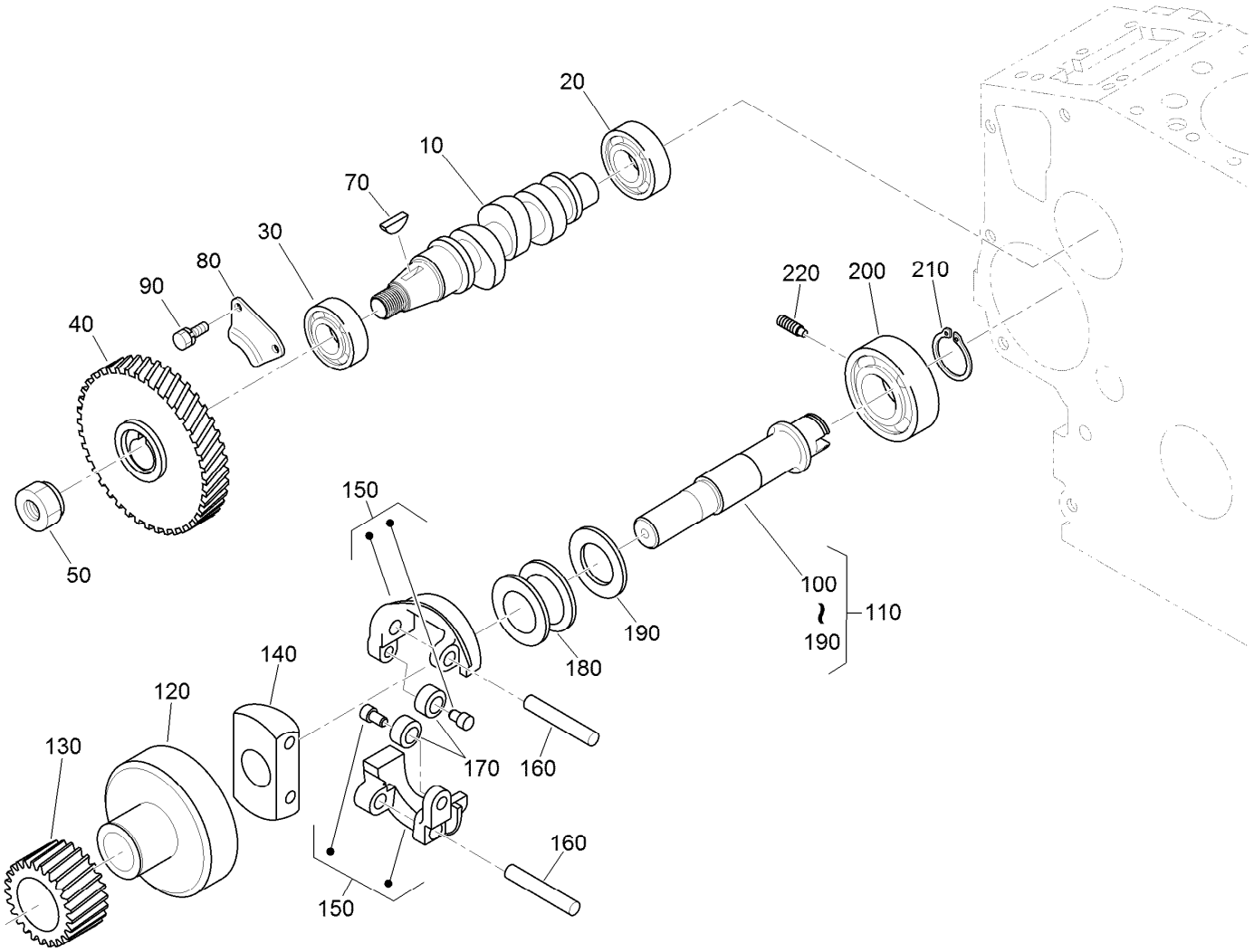

Fuel Camshaft and Governor Shaft Assembly

Ref.	Part Number	Qty.	Description
10	105-3723	1	Camshaft-Fuel
20	107-9077	1	Bearing-Ball
30	107-9078	1	Bearing-Ball
40	98-9669	1	Gear-Pump, Injection
50	130-1512	1	Nut
70	98-9595	1	Key-Woodruff
80	98-9511	1	Stopper-Fuel, Camshaft
90	98-7692	2	Bolt
100	130-1261	1	Governor Shaft ASM
110	105-3725	1	Shaft-Governor
120	98-9562	1	Holder-Gear, Governor

Ref.	Part Number	Qty.	Description
130	130-1264	1	Gear-Governor
140	98-9561	1	Holder-Weight, Governor
150	130-1263	2	Governor Weight ASM
160	98-9560	2	Shaft-Weight, Governor
170	98-9692	2	Roller
180	98-9563	1	Sleeve-Governor
190	98-9564	1	Washer-Thrust
200	107-9079	1	Bearing-Ball
210	98-9657	1	Circlip-Shaft, Governor
220	98-9565	1	Screw-Set

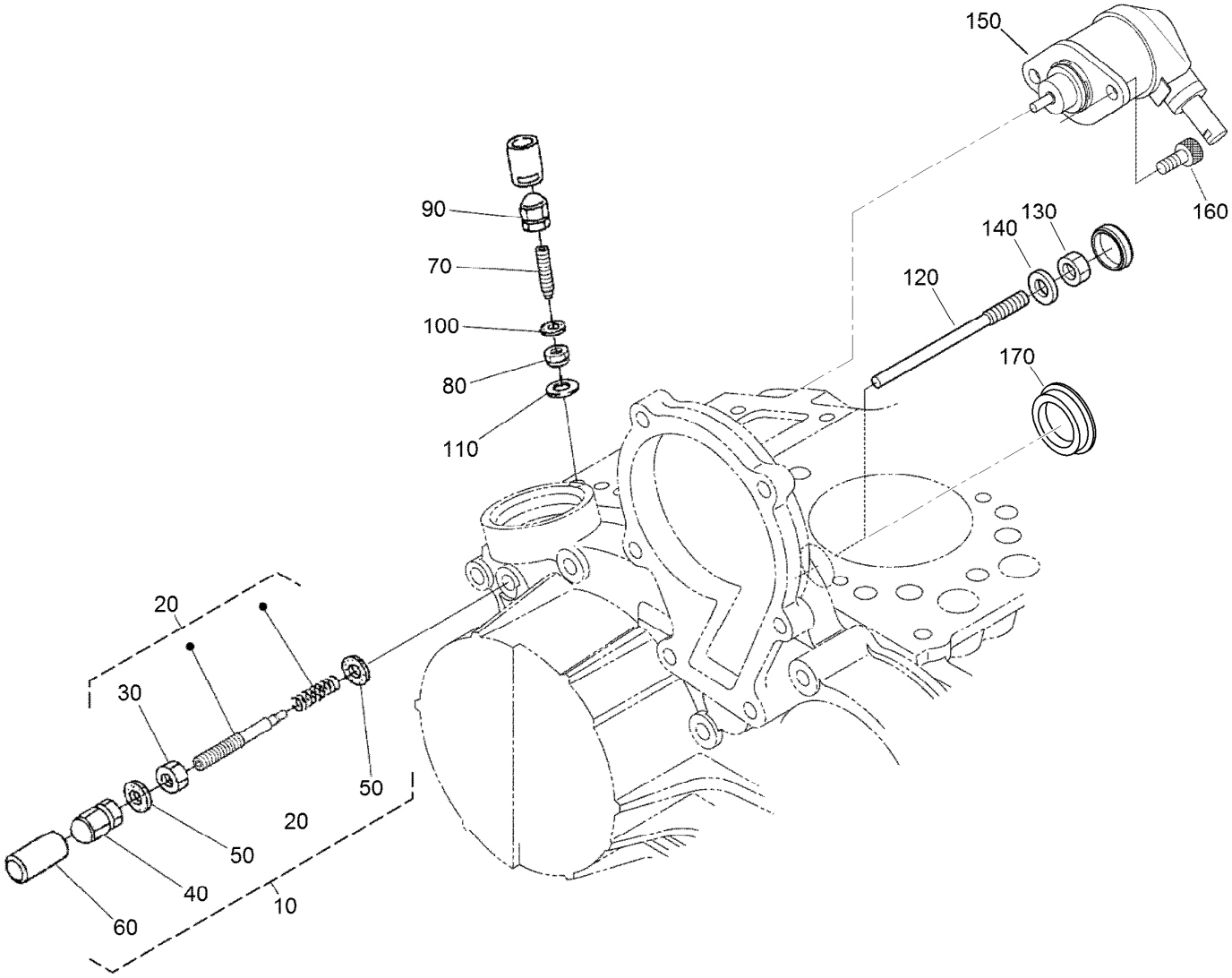

Idle Apparatus and Stop Solenoid Assembly

Ref.	Part Number	Qty.	Description
10	98-9678	1	Idle Apparatus ASM
20	112-7014	1	Adjusting Bolt ASM
30	98-9439	1	Nut
40	112-0181	1	Nut
50	98-7654	2	Gasket
60	98-7656	1	Cap
70	112-7015	1	Bolt-Adjusting
80	100-2175	1	Nut-Lock
90	112-0181	1	Nut

Ref.	Part Number	Qty.	Description
100	98-7654	1	Gasket
110	107-9081	1	Gasket
120	131-3838	1	Bolt
130	98-7572	1	Nut
140	98-7654	1	Gasket
150	104-5155	1	Solenoid-Stop
160	130-1155	2	Screw-HSH
170	112-7016	1	Cover-Pump

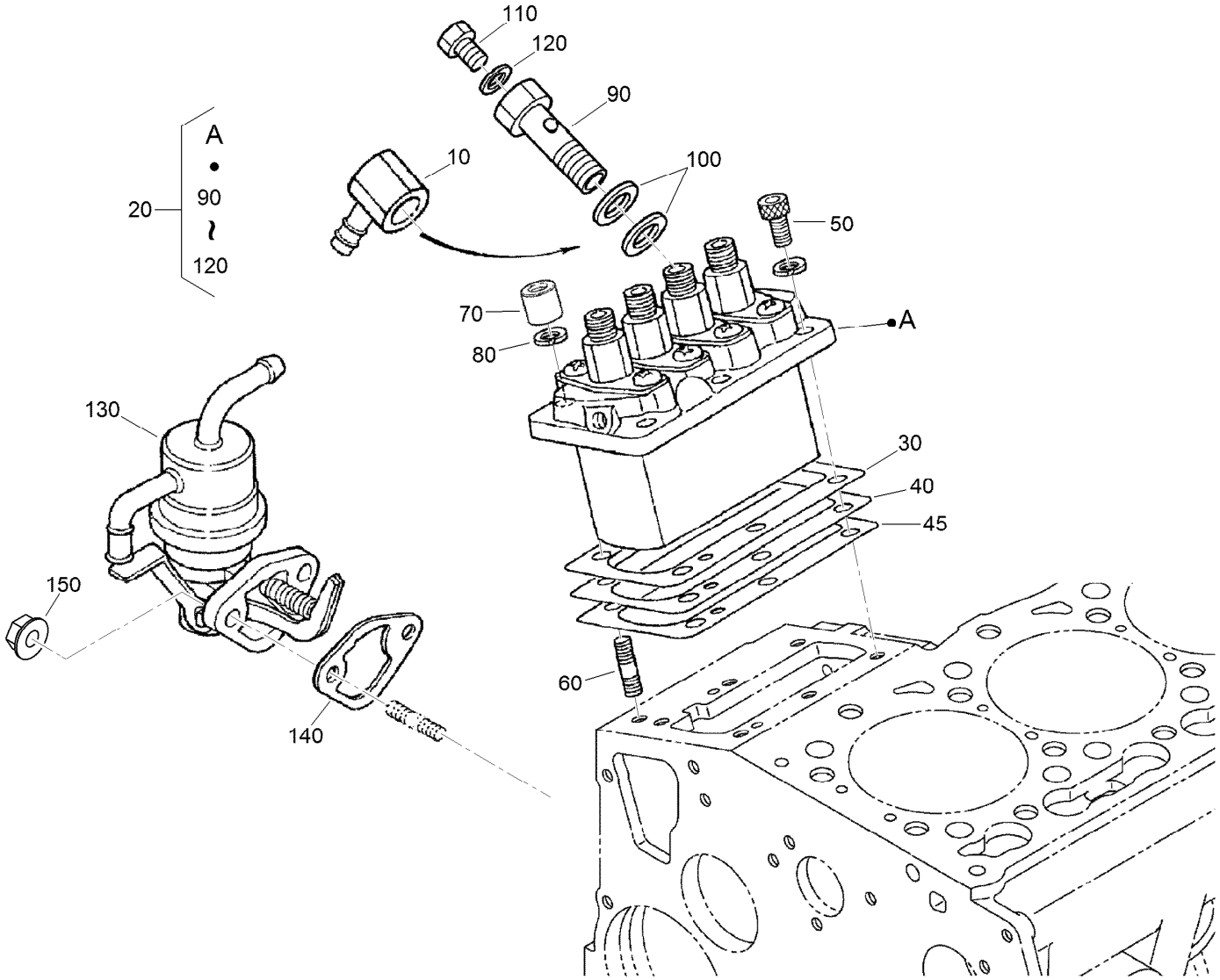

Injection Pump and Fuel Pump Assembly

Ref.	Part Number	Qty.	Description
10	98-9596	1	Joint-Eye
20	105-3727	1	Injection Pump ASM
30	105-3728	1	Shim-Pump, Injection (.20Mm)
30	105-3729	1	Shim-Pump, Injection (.25Mm)
40	105-3730	1	Shim-Pump, Injection (.30Mm)
40	115-3016	1	Shim-Pump, Injection (.350Mm)
45	115-3017	1	Shim-Pump, Injection (.175Mm)

Ref.	Part Number	Qty.	Description
50	117-7564	3	Bolt-Hex Soc HD
60	98-9438	3	Stud
70	98-9440	3	Nut-Cap
80	98-7699	3	Washer-Spring
90	98-9464	1	Bolt-Joint
100	98-9445	2	Gasket
110	98-9430	1	Screw
120	98-9446	1	Gasket
130	98-9677	1	Fuel Pump ASM
140	117-7562	1	Gasket-Pump, Fuel
150	100-2203	2	Nut-Flange

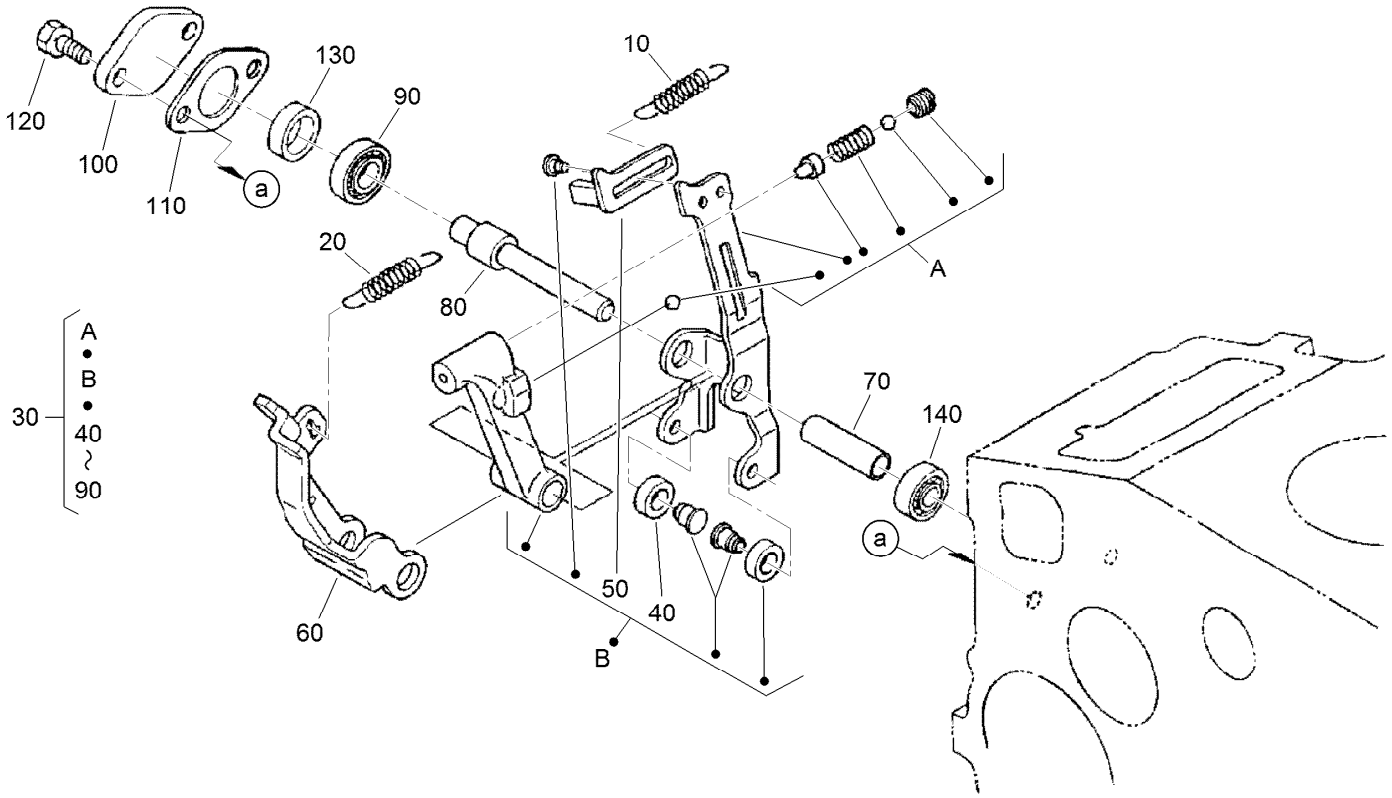

Governor Assembly

Ref.	Part Number	Qty.	Description
10	105-3741	1	Spring-Start
20	98-9681	1	Spring-Governor
30	117-7567	1	Fork Lever ASM
40	98-9692	2	Roller
50	107-9083	1	Lever-Thrust
60	107-9084	1	Lever-Fork
70	107-9085	1	Shaft-Lever, Fork
80	107-9086	1	Shaft-Lever, Fork
90	98-9570	1	Bearing-Miniaturize
100	115-4122	1	Cover-Shaft, Fork Lever
110	98-9682	1	Gasket
120	98-9350	2	Bolt
130	98-9567	1	Collar
140	98-9571	1	Bearing-Miniaturize

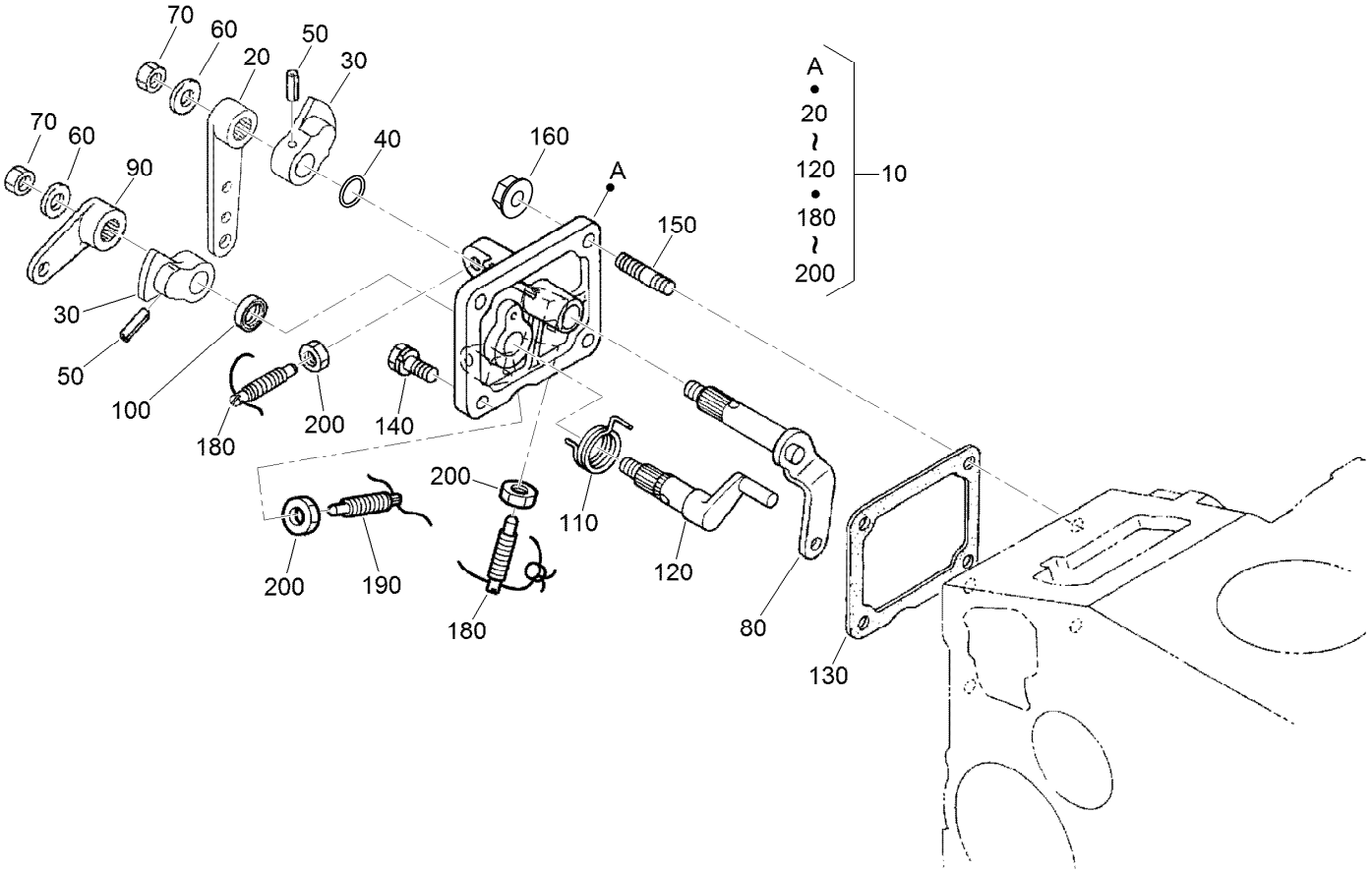

Speed Control Plate Assembly

Ref.	Part Number	Qty.	Description
10	98-9661	1	Control Plate ASM
20	98-9662	1	Lever-Control, Speed
30	98-9572	2	Lever-Control, Speed
40	105-3788	1	O-Ring
50	98-7602	2	Pin-Spring
60	98-9594	2	Washer-Plain
70	98-9589	2	Nut
80	98-9658	1	Governor Lever ASM
90	98-9663	1	Lever-Stop, Engine
100	98-7601	1	Seal-Oil

Ref.	Part Number	Qty.	Description
110	98-9472	1	Spring-Return
120	98-9664	1	Shaft-Lever, Stop
130	98-9637	1	Gasket
140	98-7692	2	Bolt
150	105-3710	2	Stud
160	100-2203	2	Nut-Flange
180	117-7565	2	Bolt-Adjusting
190	117-7566	1	Bolt-Adjusting
200	98-7572	3	Nut

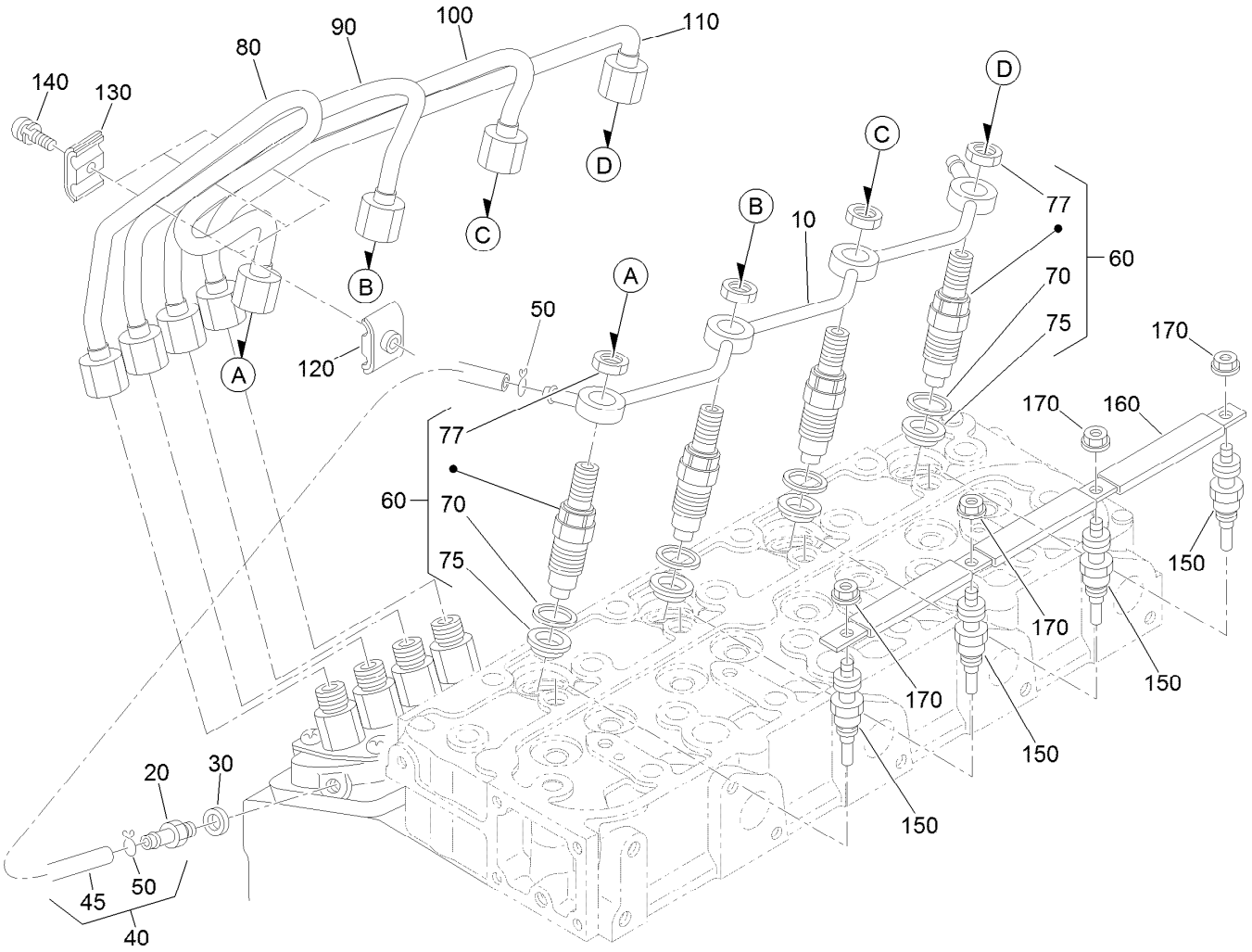

Nozzle Holder and Glow Plug Assembly

Ref.	Part Number	Qty.	Description
10	105-3737	1	Over Flow Pipe ASM
20	98-9431	1	Screw-Bleeder, Air
30	98-7654	1	Gasket
40	98-9420	1	Overflow Pipe ASM
45	112-0182	1	Pipe-Overflow
50	98-7671	2	Clip-Pipe
60	130-1376	1	Nozzle Holder Kit
70	98-7676	4	Gasket
75	98-7677	4	Seal-Heat
77	121-2411	4	Nut

Ref.	Part Number	Qty.	Description
80	98-9622	1	Pipe-Injection
90	98-9654	1	Pipe-Injection
100	98-9655	1	Pipe-Injection
110	105-3738	1	Pipe-Injection
120	98-7682	3	Clamp-Pipe
130	98-7683	3	Clamp-Pipe
140	98-7684	3	Screw (W/Washer)
150	98-9623	4	Plug-Glow
160	105-3739	1	Cord-Plug, Glow
170	99-8377	4	Nut-Flange

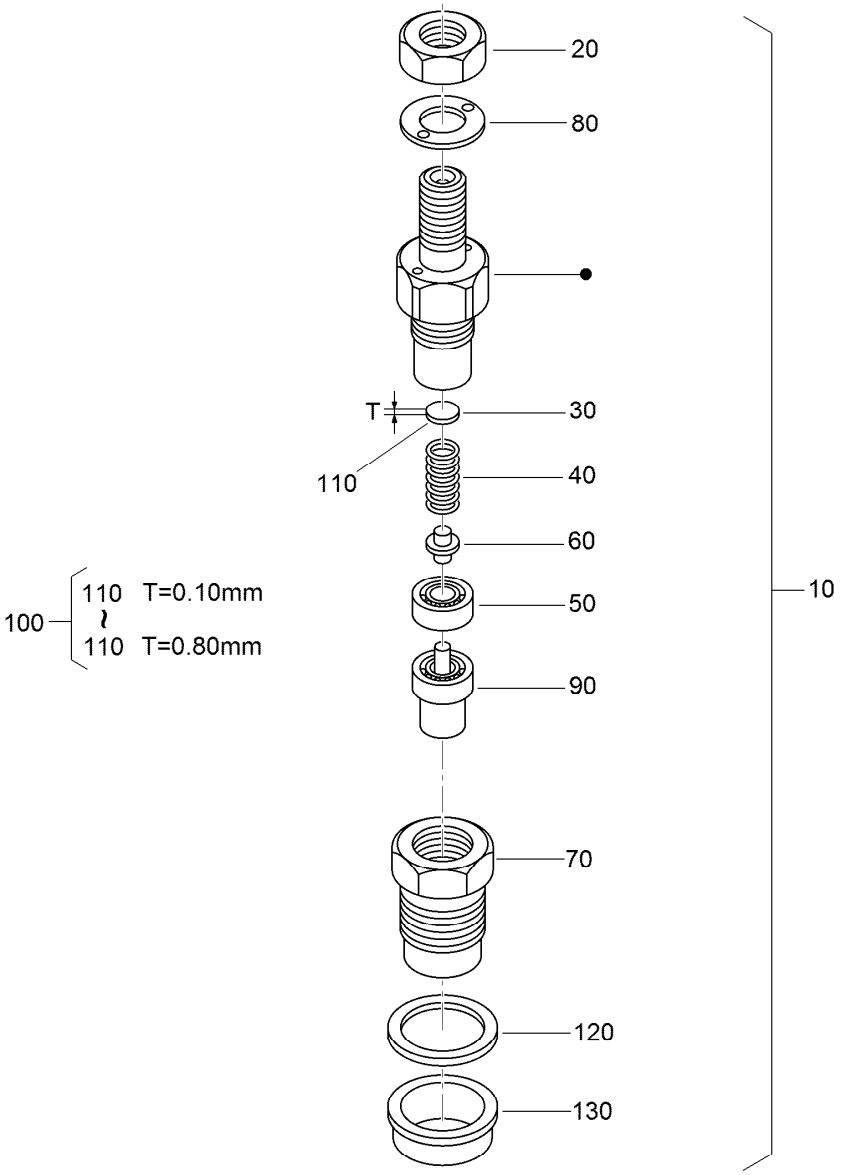

Nozzle Holder Assembly

Ref.	Part Number	Qty.	Description
10	108-2866	4	Nozzle Holder Kit
20	121-2411	4	Nut
30	99-8302	4	Washer-Adjusting
40	99-8303	4	Spring-Nozzle
50	99-8304	4	Spacer-Distance
60	99-8305	4	Rod-Push
70	99-8306	4	Nut-Nozzle
80	99-8307	4	Washer-Plain
90	107-7826	4	Piece-Nozzle
100	99-8309	4	Adjusting Washer ASM
110	99-8310	4	Washer-Adjust (0.10Mm)

Ref.	Part Number	Qty.	Description
110	99-8311	4	Washer-Adjust (0.20Mm)
110	99-8312	4	Washer-Adjust (0.30Mm)
110	99-8313	4	Washer-Adjust (0.40Mm)
110	99-8314	4	Washer-Adjust (0.50Mm)
110	99-8315	4	Washer-Adjust (0.52Mm)
110	99-8316	4	Washer-Adjust (0.54Mm)
110	99-8317	4	Washer-Adjust (0.56Mm)
110	99-8318	4	Washer-Adjust (0.58Mm)
110	99-8319	4	Washer-Adjust (0.80Mm)
120	98-7676	4	Gasket
130	98-7677	4	Seal-Heat

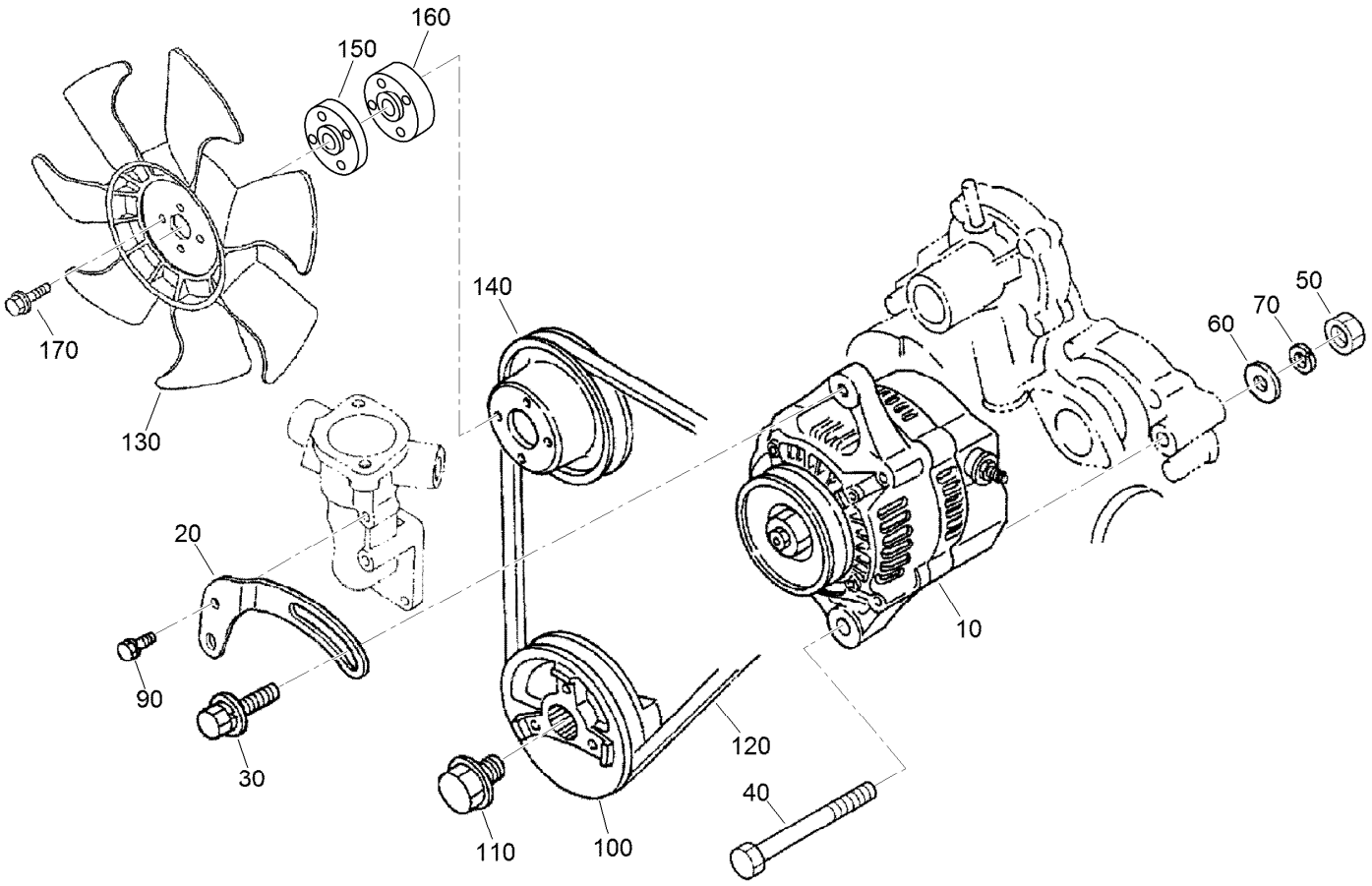

Alternator, Pulley and Fan Assembly

Ref.	Part Number	Qty.	Description
10	121-3811	1	Alternator ASM
20	112-7047	1	Stay-Dynamo
30	108-7088	1	Bolt
40	98-9360	1	Bolt
50	98-7737	1	Nut
60	98-9366	1	Washer-Plain
70	99-7527	1	Washer-Spring
90	98-7692	1	Bolt

Ref.	Part Number	Qty.	Description
100	105-3745	1	Pulley-Drive, Fan
110	98-9585	1	Bolt
120	98-9676	1	V-Belt
130	131-3839	1	Fan
140	110-0972	1	Pulley
150	105-0000	1	Spacer-Fan
160	109-2675	1	Spacer-Fan, 21Mm
170	131-3840	4	Bolt-Flange

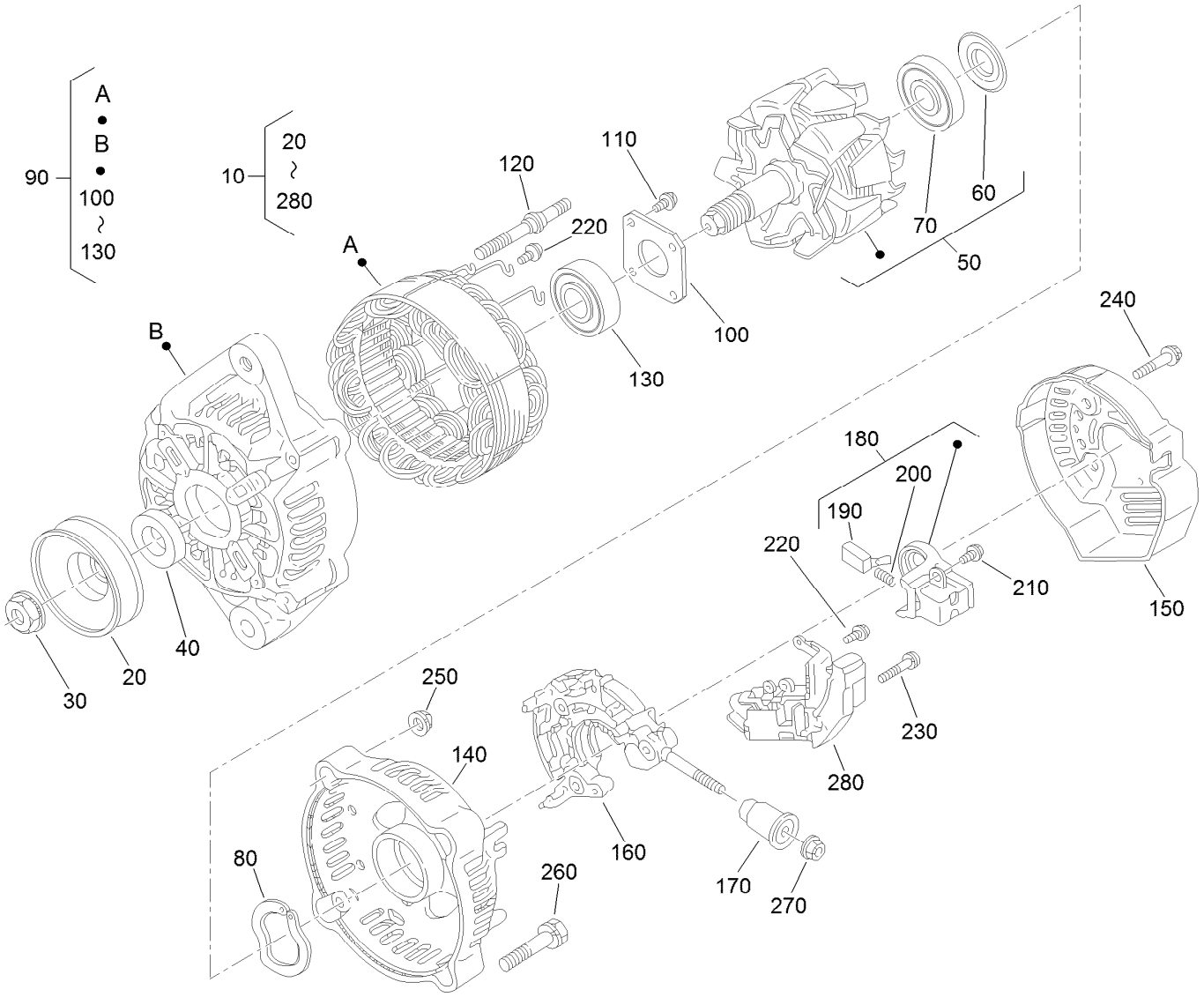

Alternator Components Assembly No. 121-3811

Ref.	Part Number	Qty.	Description
10	121-3811	1	Alternator ASM
20	98-9453	1	Pulley-Dynamo
30	98-7708	1	Nut
40	98-7709	1	Collar
50	107-0136	1	Rotor ASM
60	98-7711	1	Cover-Bearing
70	107-0138	1	Bearing-Ball
80	98-7713	1	Washer-Thrust
90	107-0139	1	Drive End Frame ASM
100	98-7715	1	Plate-Retainer
110	98-7716	4	Screw-Head, Round
120	98-7717	2	Bolt-Through
130	131-6560	1	*obs* Bearing-Ball
140	121-3812	1	Frame-End

Ref.	Part Number	Qty.	Description
150	121-3813	1	Cover-End
160	121-3805	1	Rectifier ASM
170	117-0321	1	Insulation-Brush
180	107-0141	1	Brush Holder ASM
190	98-7724	2	Brush
200	98-7725	2	Spring-Brush
210	98-7726	2	Screw-Head, Round
220	98-7727	6	Screw-Head, Round
230	98-7728	1	Screw-Head, Round
240	98-7729	3	Bolt
250	98-7730	2	Nut
260	98-7731	2	Bolt
270	98-7732	1	Nut
280	121-3809	1	Regulator ASM

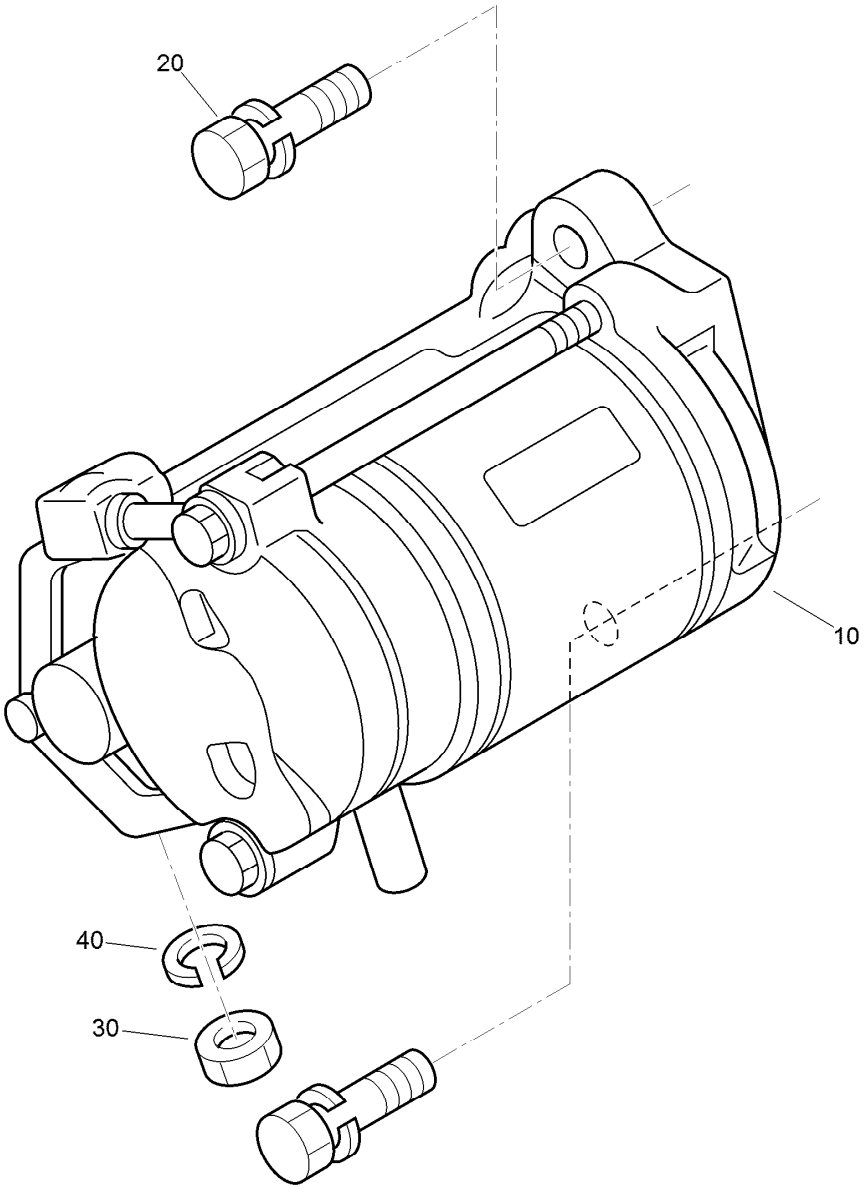

Starter Installation Assembly

Ref.	Part Number	Qty.	Description
10	98-9705	1	Starter ASM
20	98-7697	2	Bolt
30	98-7739	1	Nut
40	131-9579	1	Washer-Spring, Lock

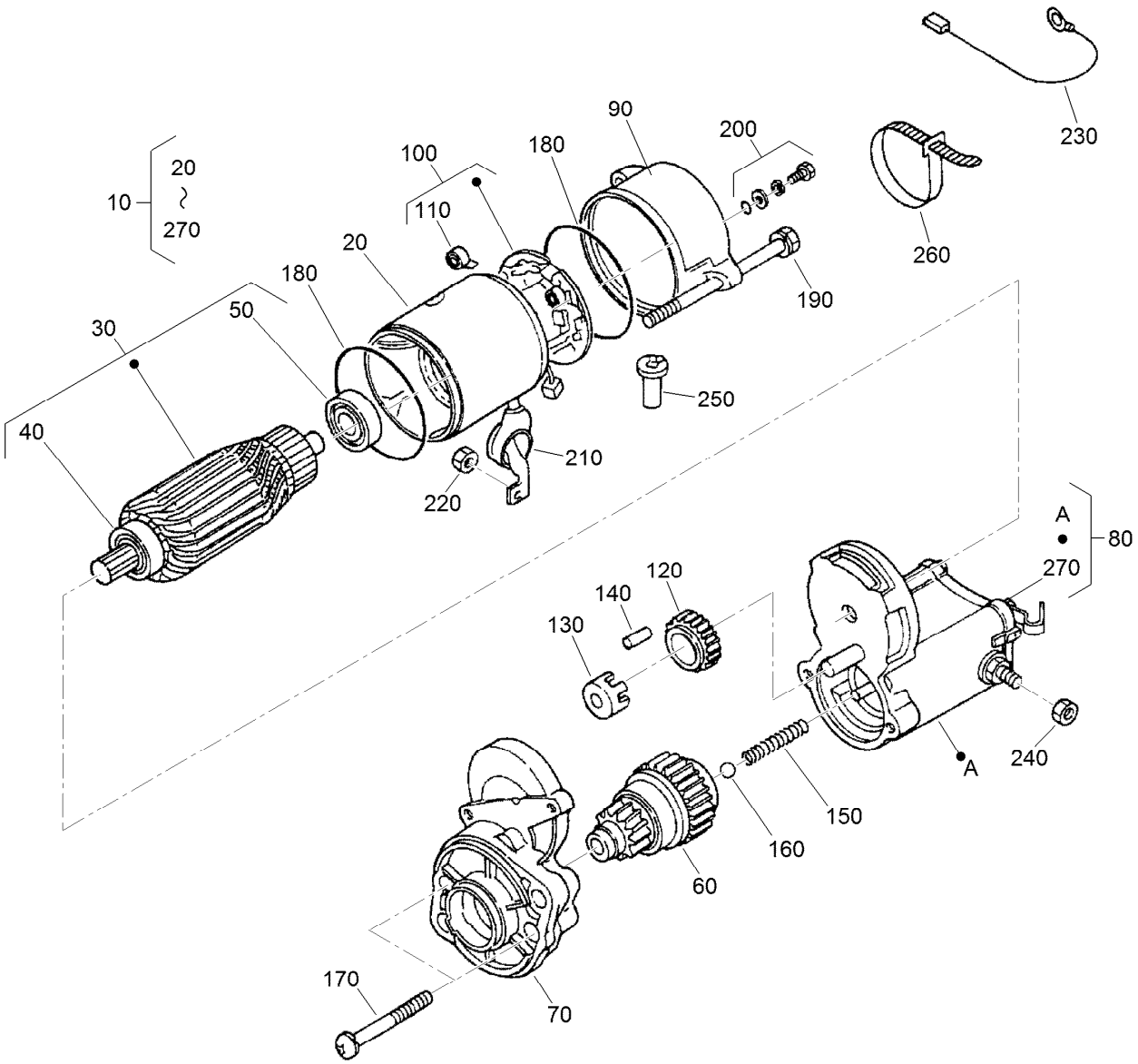

Starter Component Part Assembly No. 111-7496

Ref.	Part Number	Qty.	Description
10	98-9705	1	Starter ASM
20	104-8608	1	Yoke ASM
30	98-7742	1	Armature ASM
40	98-7744	1	Bearing
50	98-7743	1	Bearing
60	99-8373	1	Clutch-Running, Over
70	99-8374	1	Frame-End, Drive
80	105-3746	1	Magnetic Switch ASM
90	98-7748	1	Frame-End
100	98-7749	1	Brush Holder ASM
110	98-7750	4	Spring-Brush
120	98-7751	1	Gear
130	98-7752	1	Retainer
140	98-7753	5	Roller

Ref.	Part Number	Qty.	Description
150	98-7754	1	Spring
160	98-7755	1	Ball
170	98-7756	2	Bolt
180	98-7757	2	O-Ring
190	100-9240	2	Bolt
200	98-7758	2	Bolt ASM
210	99-8375	1	Cover
220	99-8371	1	Nut-Hex
230	98-9711	1	Cord-Solenoid, Stop
240	99-8376	1	Nut-Hex
250	98-7759	1	Pipe-Drain
260	98-9712	1	Band-Cover
270	105-2886	1	Cover ASM

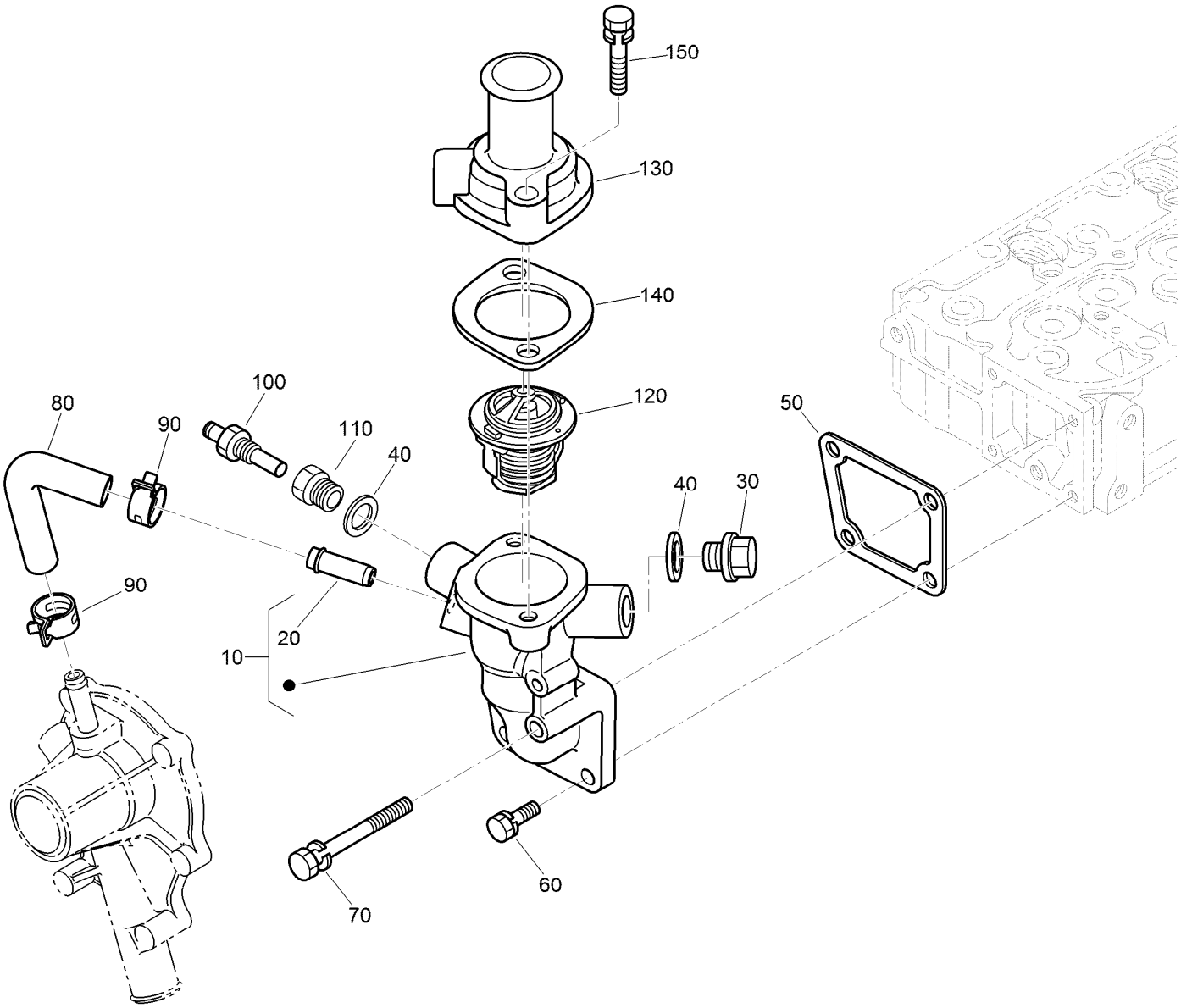

Water Flange and Thermostat Assembly

Ref.	Part Number	Qty.	Description
10	98-9713	1	Water Flange ASM
20	98-9580	1	Pipe-Return, Water
30	105-3747	1	Plug
40	99-3583	2	Gasket
50	98-9638	1	Gasket-Flange, Water
60	98-7692	3	Bolt
70	98-9356	1	Bolt
80	98-9578	1	Pipe-Return, Water
90	125-9078	2	Clamp-Hose
100	100-1983	1	Thermo-Switch
110	130-1377	1	Adapter-Thermoswitch
120	98-7778	1	Thermostat ASM
130	98-9471	1	Cover-Thermostat
140	105-3748	1	Gasket-Thermostat
150	98-7777	2	Bolt

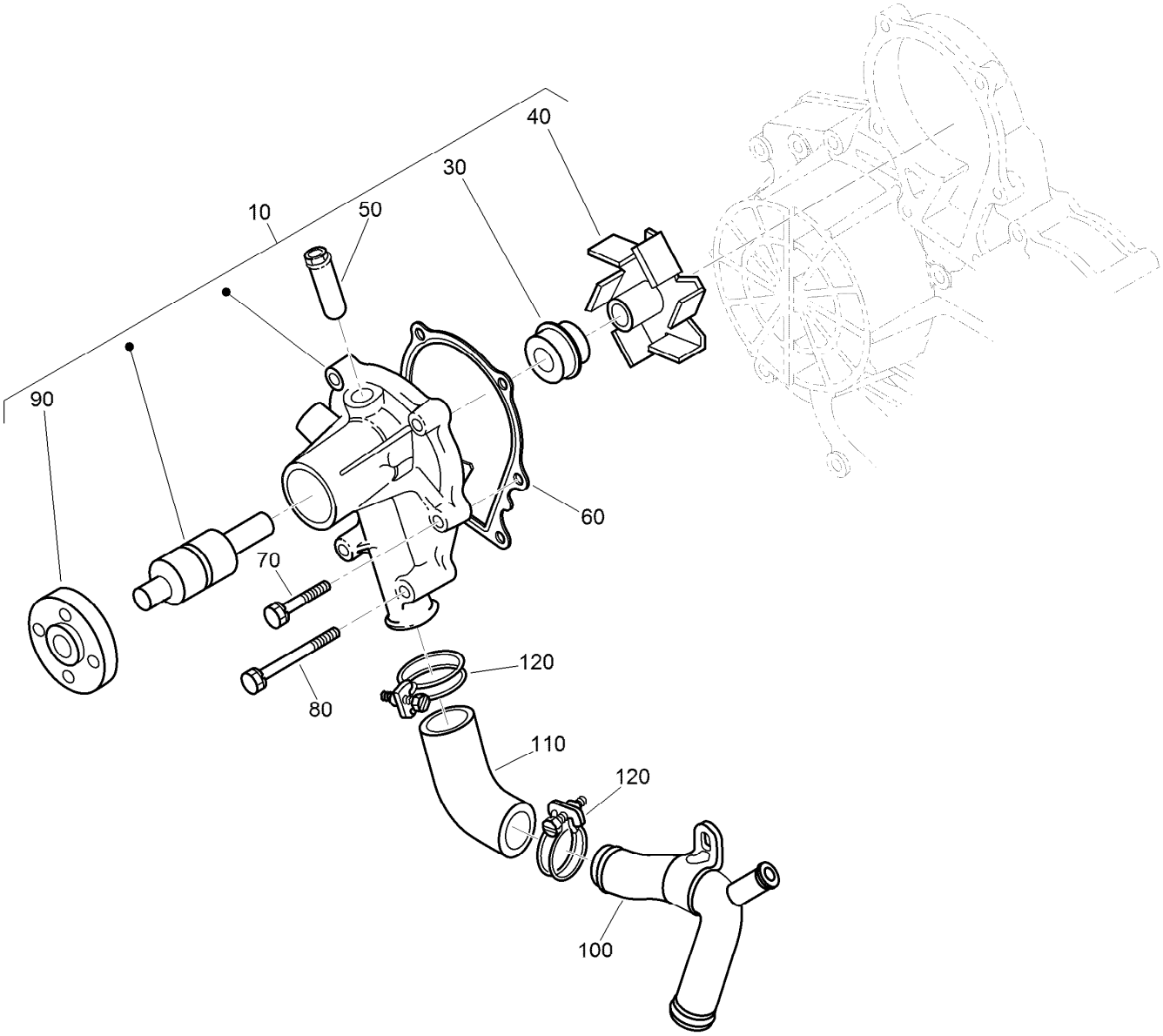

Water Pump and Water Pipe Assembly

Ref.	*Part Number*	*Qty.*	*Description*
10	107-9089	1	Water Pump ASM
30	105-3750	1	Mechanical Seal ASM
40	112-7017	1	Impeller-Pump, Water
50	100-1932	1	Pipe-Return, Water
60	99-3454	1	Gasket-Pump, Water
70	98-9353	4	Bolt
80	107-9090	2	Bolt
90	99-3516	1	Flange-Pump, Water
100	131-3849	1	Pipe-Water
110	107-9091	1	Pipe-Water
120	127-0439	2	Clamp-Hose

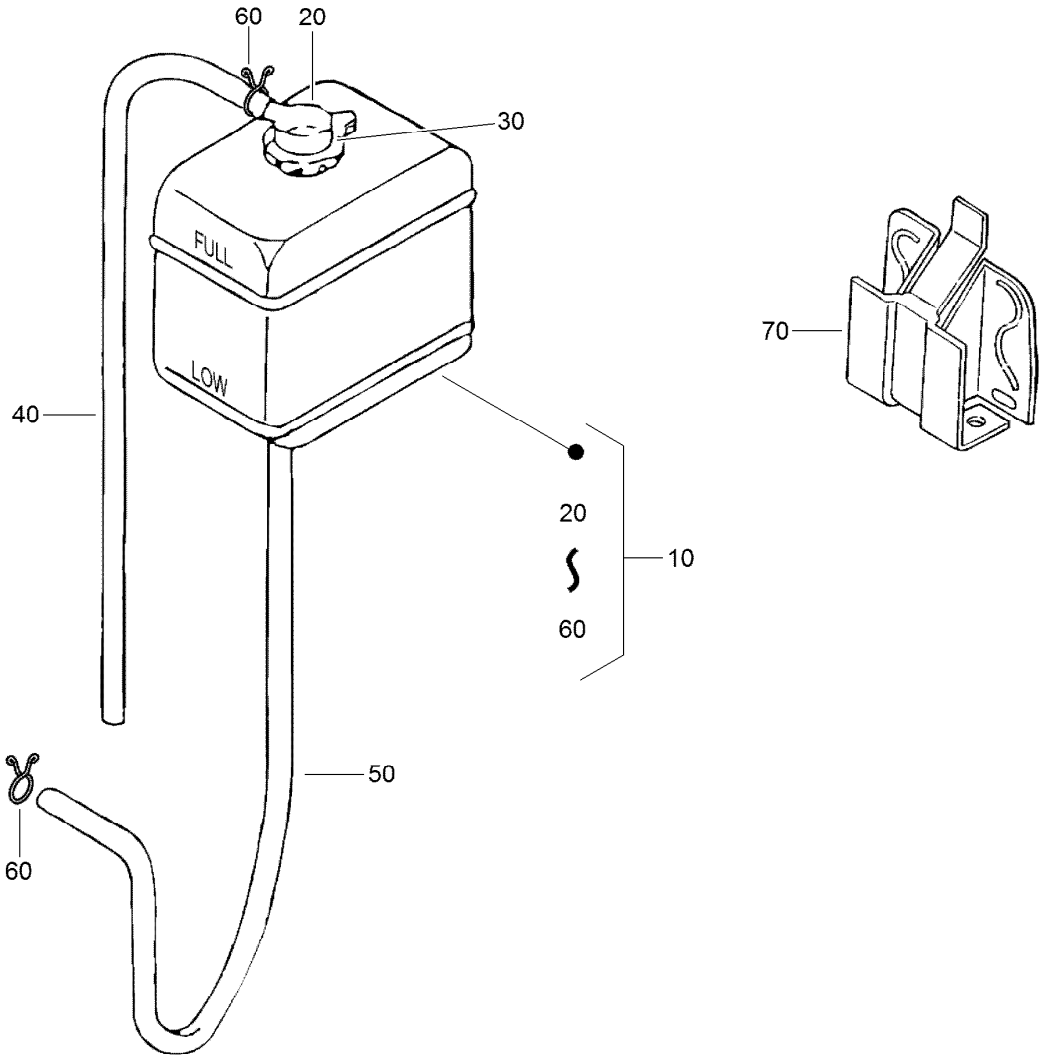

Reserve Tank Assembly

Ref.	*Part Number*	*Qty.*	*Description*
10	108-0638	1	Bottle-Overflow
20	130-1192	1	Cap
30	105-3755	1	Gasket
40	130-1201	1	Pipe-Overflow
50	130-1568	1	Pipe-Overflow, Water
60	130-1200	2	Clip-Pipe
70	130-1202	1	Stay-Tank, Reserve

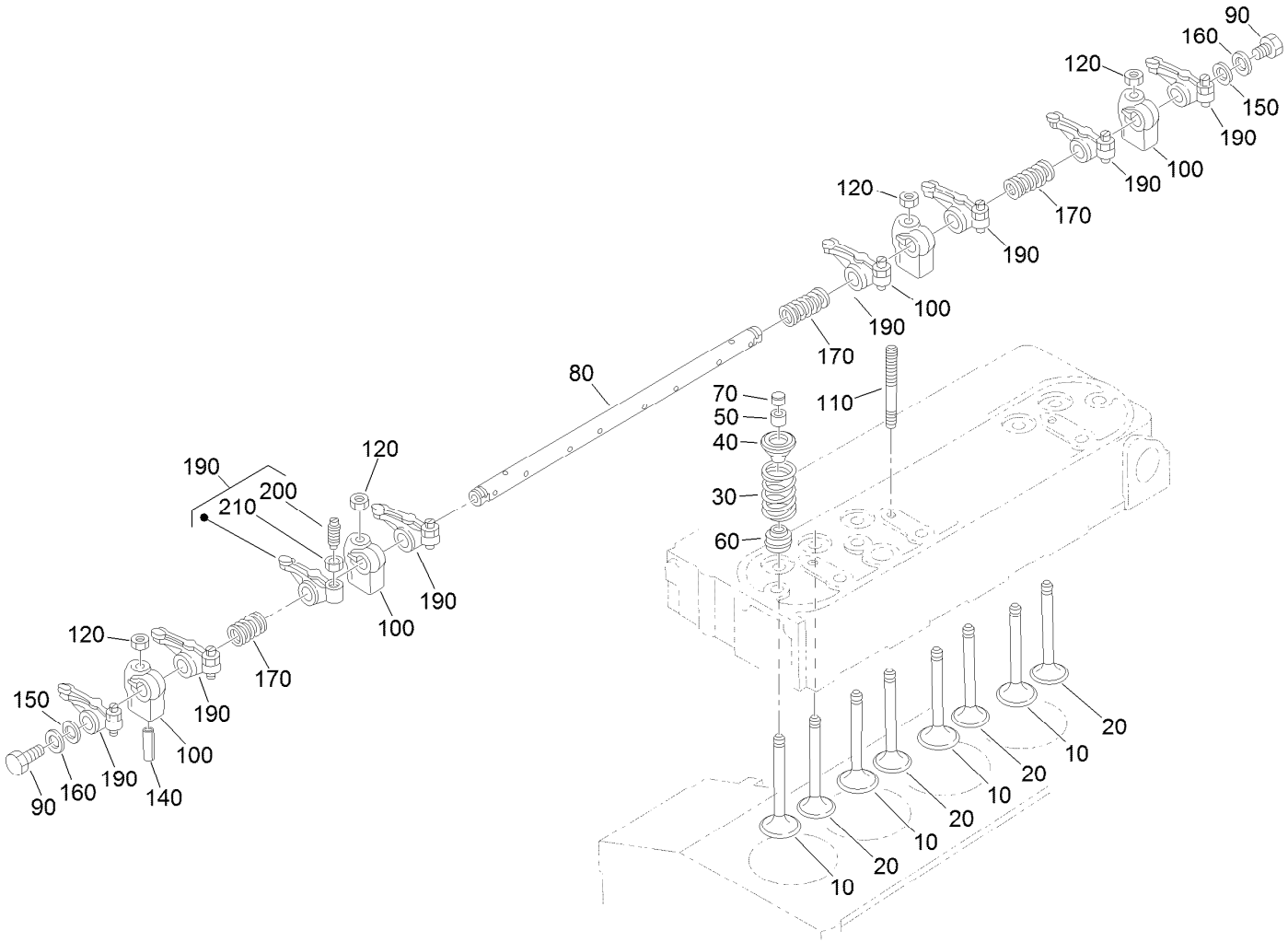

Valve and Rocker Arm Assembly

Ref.	Part Number	Qty.	Description
10	112-7018	4	Valve-Inlet
20	112-7019	4	Valve-Exhaust
30	98-9626	8	Spring-Valve
40	107-9092	8	Retainer-Spring
50	117-7572	8	Collet-Spring, Valve
60	99-8385	8	Seal-Stem, Valve
70	98-9497	8	Cap-Valve
80	127-0420	1	Shaft-Arm, Rocker
90	99-8363	2	Bolt-Flange
100	98-9505	4	Bracket-Arm, Rocker

Ref.	Part Number	Qty.	Description
110	98-9506	4	Stud
120	131-6563	4	Nut-Flange
140	105-3758	1	Pin-Spring
150	98-9507	2	Washer-Shaft, Rocker Arm
160	110-3832	2	Washer-Plain
170	98-9504	3	Spring-Arm, Rocker
190	112-7020	8	Rocker Arm ASM
200	98-9502	8	Screw-Adjusting
210	98-9503	8	Nut

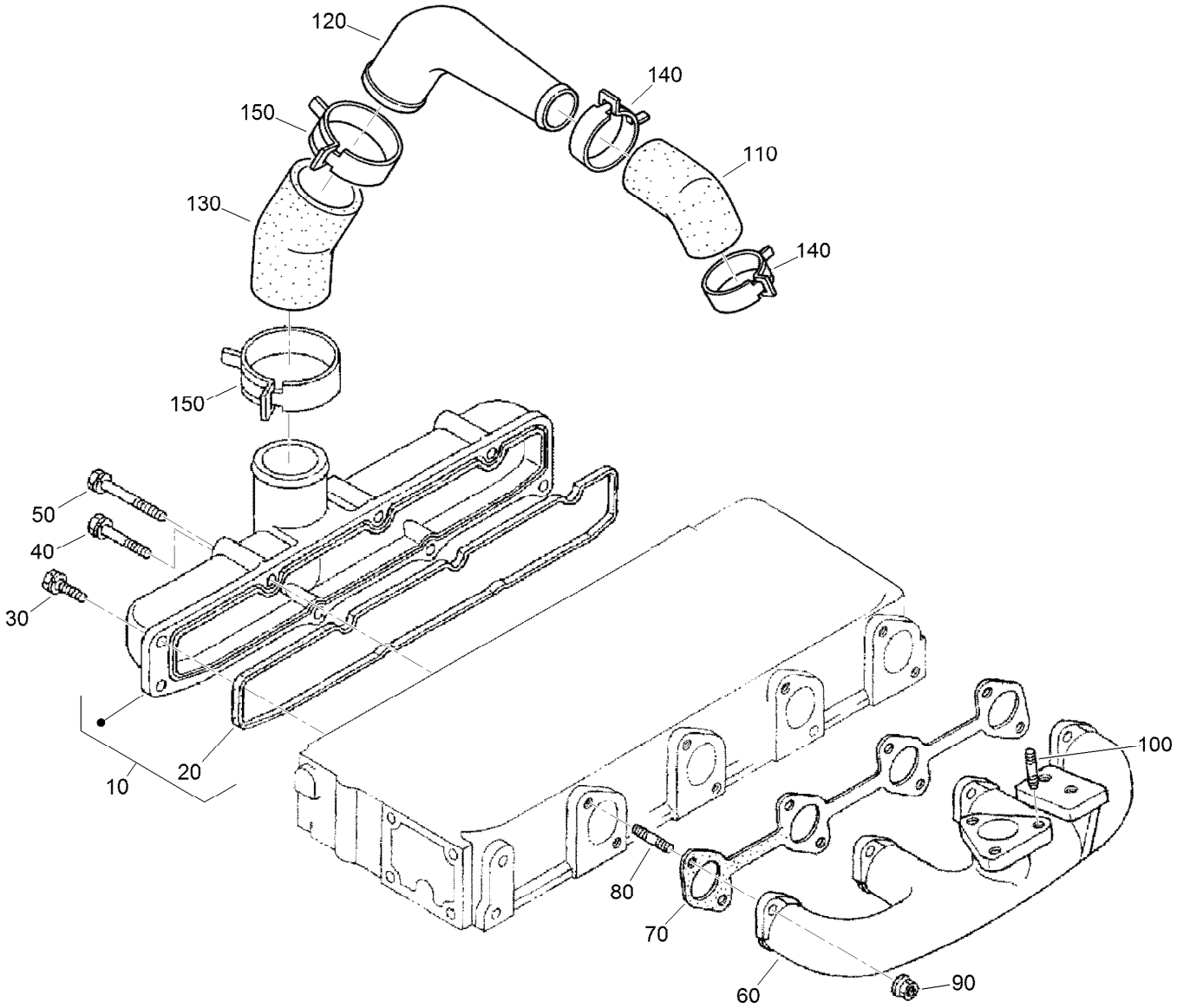

Inlet and Exhaust Manifold Assembly

Ref.	Part Number	Qty.	Description
10	105-3759	1	Inlet Manifold ASM
20	105-3760	1	Gasket-Manifold, Intake
30	127-0403	3	Bolt-Flange
40	98-9353	2	Bolt
50	125-9063	3	Bolt-Sems
60	105-3764	1	Manifold-Exhaust
70	105-3765	1	Gasket-Manifold, Exhaust
80	98-9588	8	Stud
90	98-9665	8	Nut
100	130-1157	3	Bolt-Stud
110	105-3761	1	Pipe-Inlet
120	105-3762	1	Pipe-Inlet
130	105-3763	1	Pipe-Inlet
140	99-8324	2	Band-Pipe
150	99-8322	2	Band-Pipe

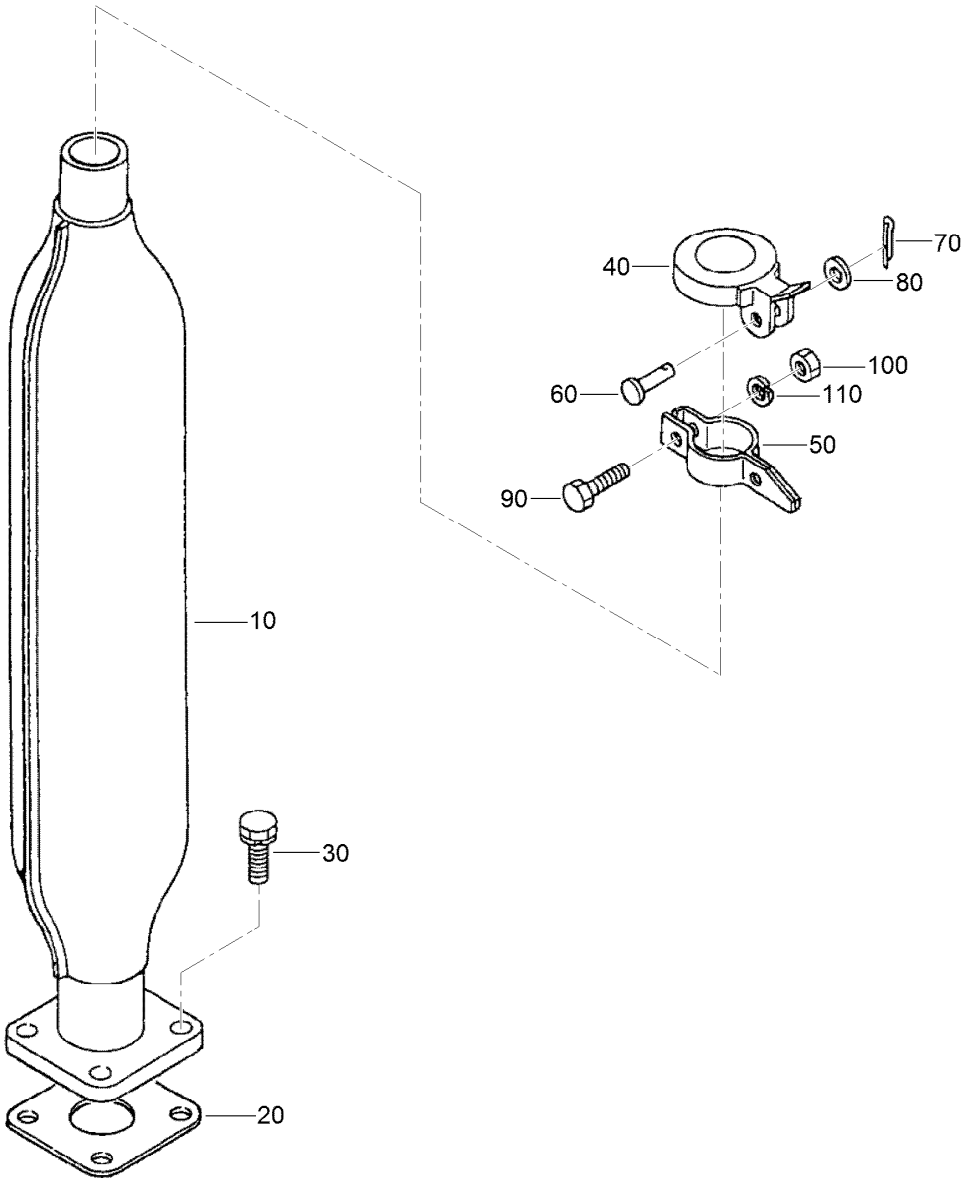

Muffler Assembly

Ref.	Part Number	Qty.	Description
10	131-3842	1	Muffler
20	99-8343	1	Gasket-Muffler
30	98-7610	4	Bolt
40	131-3843	1	Cap-Muffler
50	131-3844	1	Band-Cap, Muffler
60	131-3845	1	Pin
70	131-3846	1	Pin-Split
80	98-7648	1	Washer-Plain
90	131-3847	1	Bolt-Hex
100	98-7572	1	Nut
110	98-7699	1	Washer-Spring

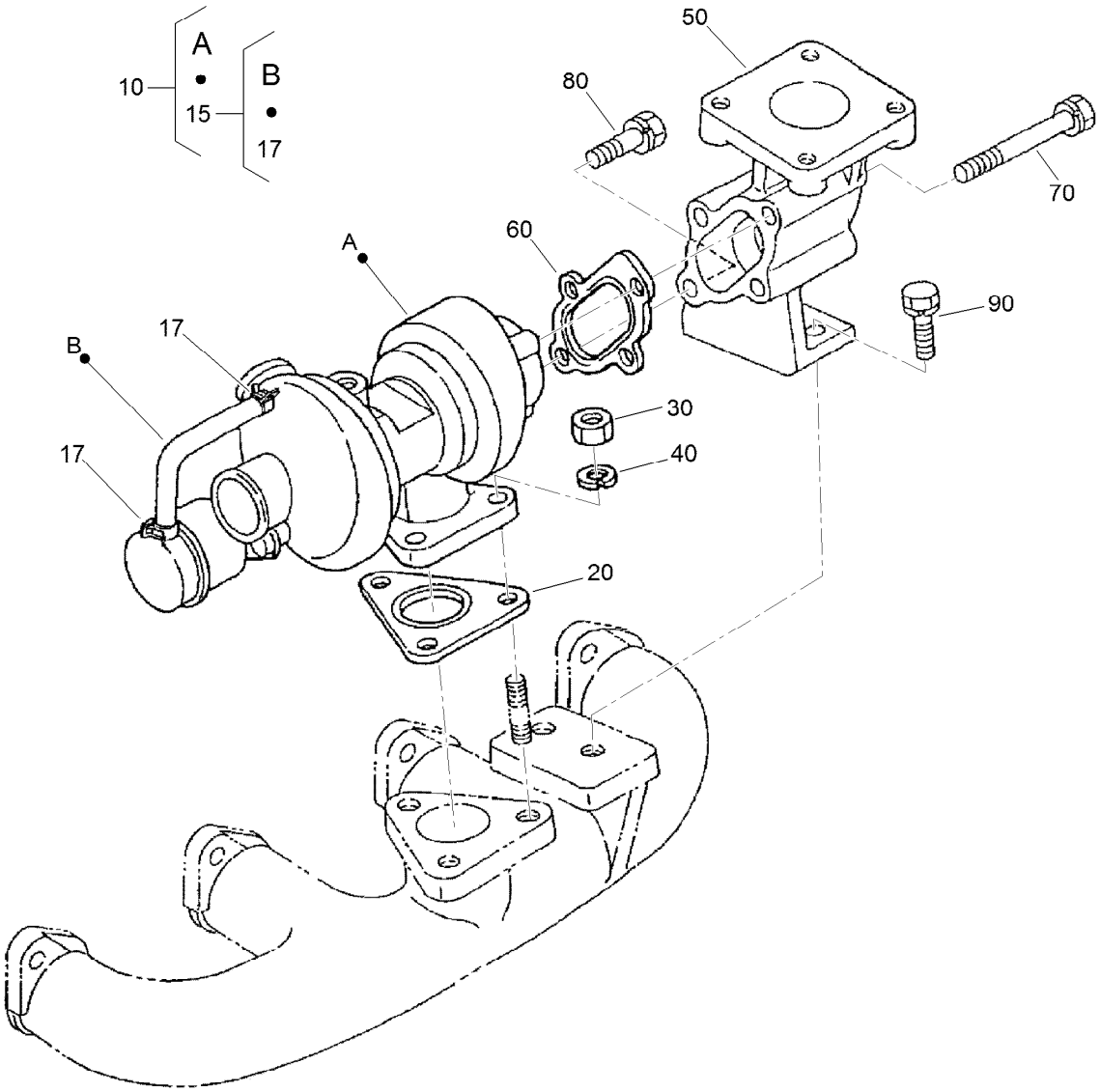

Turbo Charger Assembly

Ref.	*Part Number*	*Qty.*	*Description*
10	131-3848	1	Turbo Charger ASM
15	108-1413	1	Hose ASM
17	108-1414	2	Clamp-Hose
20	105-3767	1	Gasket
30	98-7534	3	Nut
40	3253-4	3	Washer-Lock
50	99-8335	1	Flange-Muffler
60	105-3768	1	Gasket
70	115-4100	3	Bolt
80	105-2895	1	Bolt
90	98-7610	2	Bolt

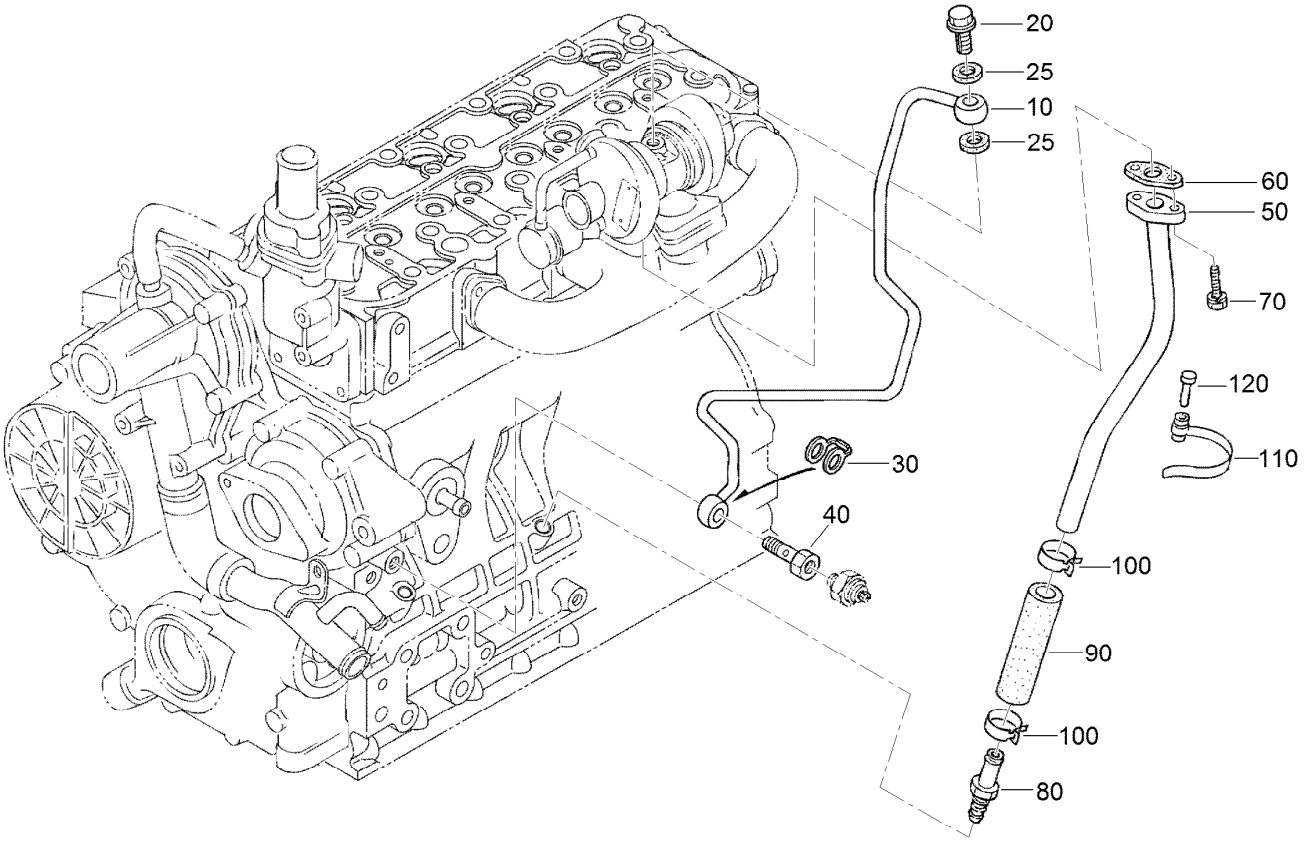

Oil Pipe (Turbo Charger) Assembly

Ref.	*Part Number*	*Qty.*	*Description*
10	108-4424	1	Oil Pipe ASM
20	115-4126	1	Bolt-Joint, Eye
25	130-1423	1	Gasket
30	99-8346	2	Gasket
40	98-9417	1	Bolt-Joint, Eye
50	117-7589	1	Oil Pipe ASM
60	108-4422	1	Gasket
70	98-9351	2	Bolt
80	105-3771	1	Oil Pipe ASM
90	98-9721	1	Pipe-Oil
100	98-9714	2	Clamp-Hose
110	98-9601	1	Clamp-Pipe
120	98-9591	1	Pin-Band

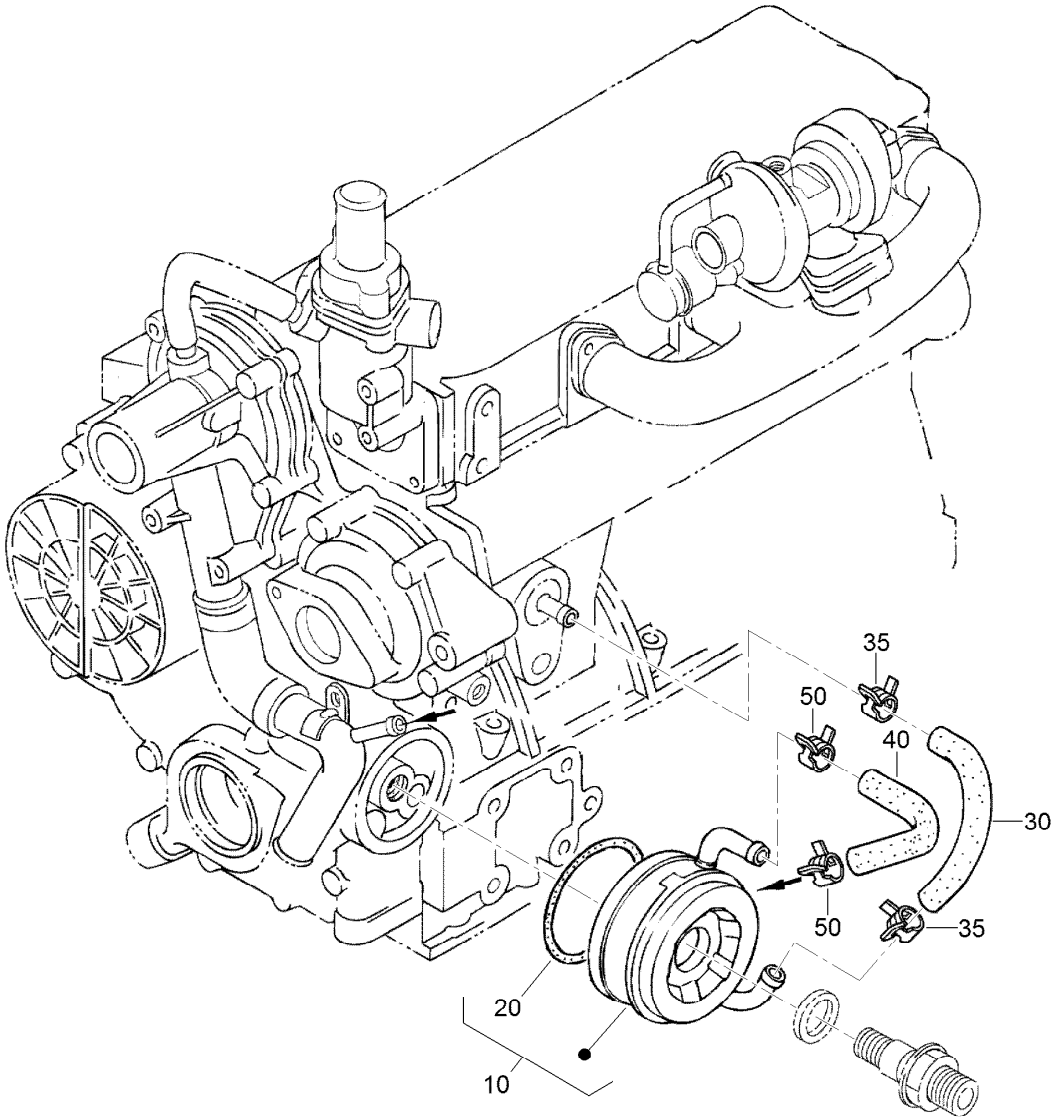

Oil Cooler Assembly

Ref.	Part Number	Qty.	Description
10	104-5158	1	Oil Cooler ASM
20	112-7030	1	O-Ring
30	98-9724	1	Pipe-Cooler, Oil
35	98-9579	2	Band-Pipe
40	98-9578	1	Pipe-Return, Water
50	131-9581	2	*obs* Clamp-Hose

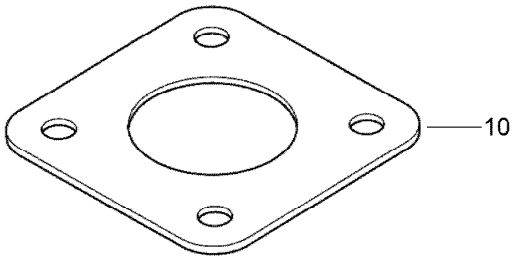

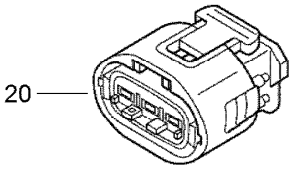

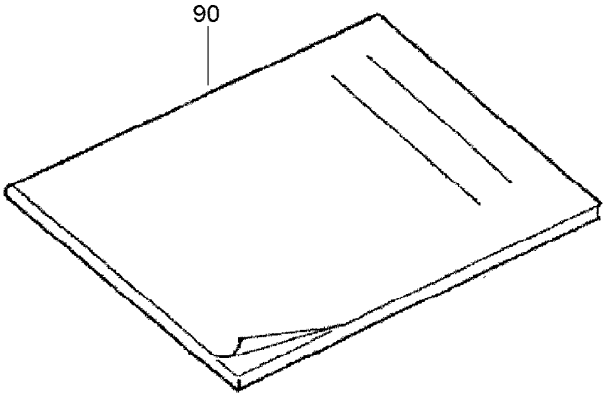

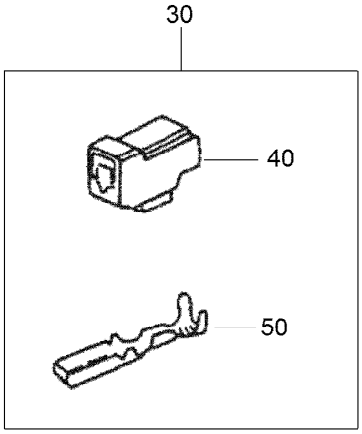

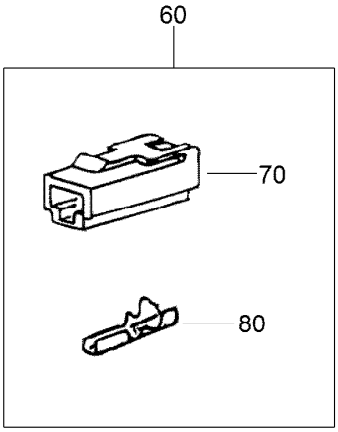

Miscellaneous Engine Parts

Ref.	*Part Number*	*Qty.*	*Description*
10	99-8343	2	Gasket-Muffler
20	130-1291	1	Connector ASM
30	115-8600	1	Coupler ASM
40	115-8601	1	Connector
50	115-8602	2	Terminal
60	130-1328	1	Terminal
70	130-1175	1	Connector
80	130-1176	1	Terminal
90	115-4104	1	Operator Manual

Attachments and Accessories

For 30659 LT-F3000 Heavy-Duty Triple Turf Flail Mower

Product Name	Model/Part
Road Light Kit including Brake Lights	02918
Flashing Beacon Kit	02920
Flashing Beacon Kit (Cab)	134-0264
Cab with Air-Conditioner	02895
Air Conditioning Fit Kit (V1505T & LT-F3000)	02893
TUV Deck Cover Kit	02991
TÜV Kit - Speed Decal 20kph	02980
TÜV Kit - German Vehicle Serial Plate	02983
Fuse-In Line	111-5101
Warning Triangle	111-4250
Standard Seat Fabric Upgrade Kit	02864
Deluxe Replacement PVC Air Seat	02865
Deluxe Replacement Fabric Air Seat	02866
Blower Carrier Kit	02921
Kevlar Tyre Kit	02914
Slope Indicator Kit	111-9225
Blade Sharpening Kit	111-9684
MVP Kit, LT-F3000 Traction Unit	111-9682
Cutter Unit	02830
Roller-Smooth Mk3 (Sealed for Life)	111-1848
Mk.3 250mm 4-Blade LH-Helix Cutter Unit	02815
Mk.3 250mm 6-Blade LH-Helix Cutter Unit	02816
Mk.3 250mm 8-Blade LH-Helix Cutter Unit	02817
Fuel Tank Kit	134-2025
Storage Lock Kit	134-2167
Rear View Mirrors Kit	111-9895
Reel Conversion Kit	02827

Notes:

Notes:

TORO®

Count on it.