Form No. 3438-297 Rev B

Soft Side Bagger

ProLine Commercial Walk-Behind Mower

Model No. 139-7860

Installation Instructions

Safety

Safety and Instructional Decals

Safety decals and instructions are easily visible to the operator and are located near any area of potential danger. Replace any decal that is damaged or missing.

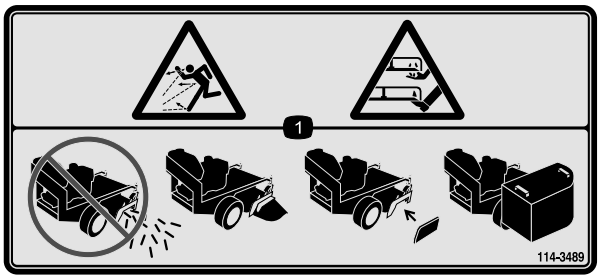

decal114-3489

114-3489

1. Thrown object hazard; cutting/dismemberment hazard—do not operate the machine with the discharge opening uncovered; always operate the machine with the rear discharge deflector, discharge cover, or grass collector installed.

© 2020—The Toro® Company
8111 Lyndale Avenue South
Bloomington, MN 55420

Register at www.Toro.com.

Original Instructions (EN)
Printed in the USA
All Rights Reserved

3438-297 B

Installation

Note: Determine the left and right sides of the machine from the normal operating position.

1

Preparing the Machine

No Parts Required

Procedure

1. Park the machine on a level surface.
2. Disengage the PTO and engage the parking brake.
3. Shut off the engine, remove the key, and wait for all moving parts to stop before leaving the operating position.

2

Assembling the Bagger

Parts needed for this procedure:

1	Back plate
1	Support
1	Mounting bracket
7	Bolt (1/4 x 5/8 inch)
7	Locknut (1/4 inch)
1	Clamp
1	Bolt (3/8 x 3/4 inch)
1	Locknut (3/8 inch)
1	Left latch
1	Right latch
4	Phillips-head screw
4	Locknut (#10)
4	Lock washer

Procedure

1. Install the support on the back plate using 4 bolts (1/4 x 5/8 inch) and 4 locknuts (1/4 inch); Figure 1.

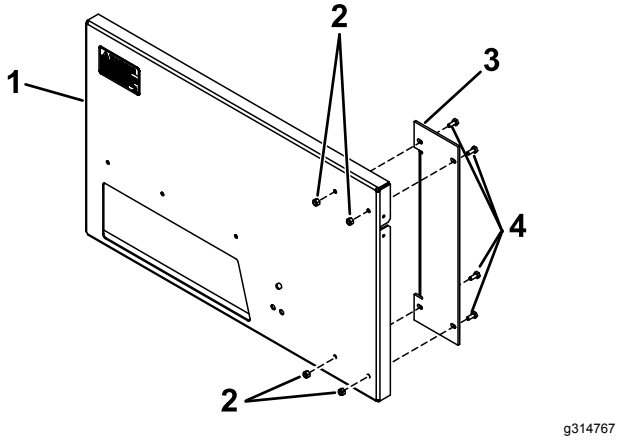

Figure 1

1. Back plate
2. Locknuts (1/4 inch)
3. Support
4. Bolts (1/4 x 5/8 inch)

2. Install the mounting bracket to the back plate with 3 bolts (1/4 x 5/8 inch) and 3 locknuts (1/4 inch); Figure 2.

   Note: For 36-inch and 48-inch decks, an adapter kit is needed. Order Part no. 121-7515.

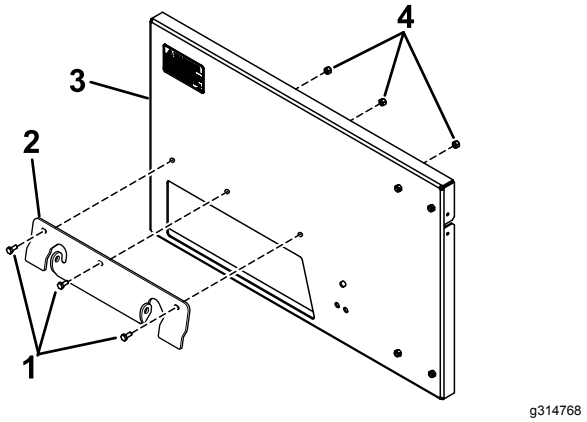

Figure 2

1. Bolts (1/4 x 5/8 inch)
2. Mounting bracket
3. Back plate
4. Locknuts (1/4 inch)

3. Install the clamp to the bagger and adapter with a bolt (3/8 x 3/4 inch) and locknut (3/8 inch); Figure 3.

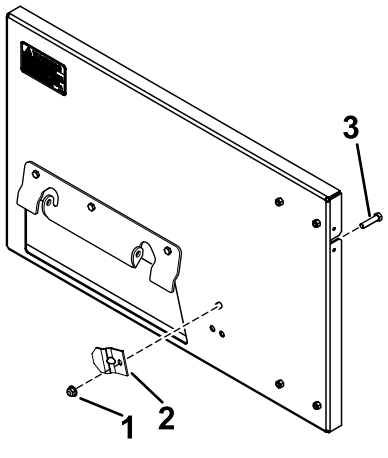

Figure 3

1. Locknut (3/8 inch)
2. Clamp
3. Bolt (3/8 x 3/4 inch)

4. Install the latches to both sides of the back plate using 4 phillips-head screws, 4 lock washers, and 4 locknuts (#10); Figure 4.

   Important: **Do not completely tighten the nuts; the latches should be able to move up and down.**

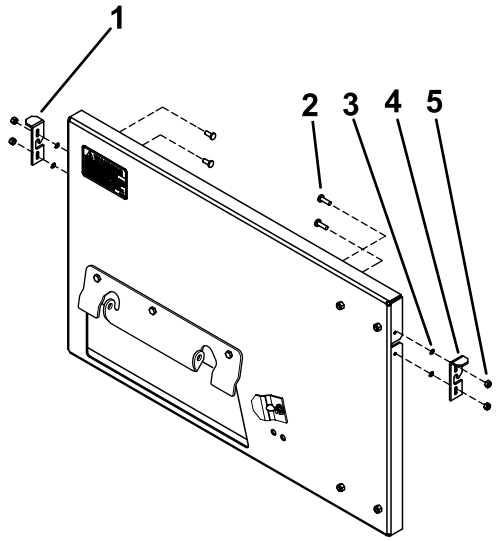

Figure 4

1. Left latch
2. Phillips-head screw
3. Lock washer
4. Right latch
5. Locknut (#10)

3

Assembling the Bag and Frame

Parts needed for this procedure:

1	Bag and pan
1	Catcher frame
2	Handle
4	Bolt (1/4 x 1 inch)
4	Locknut (1/4 inch)
4	Washer (1/4 inch)

Procedure

1. Slide the upper curved portion of the bagger frame into the bag and the long straight rod down toward the pan.
2. Snap the J-strips over the frame rods (Figure 5).

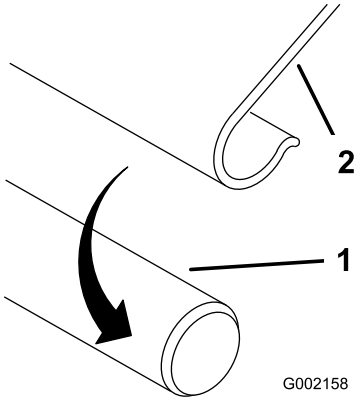

Figure 5

1. Rod
2. J-strip

3. Arrange the bag around the frame.
4. Place the handles over the slots on each side of the frame.
5. Push 2 bolts (1/4 x 1 inch) through each handle and the fabric from the outside, and secure them with 4 washers (1/4 inch), and locknuts (1/4 inch) as shown in Figure 6.

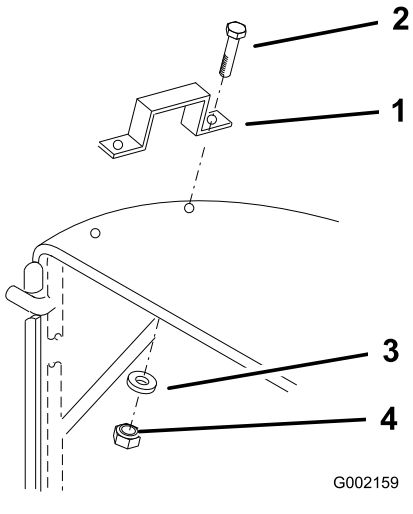

Figure 6

1. Handle
2. Bolt (1/4 x 1 inch)
3. Washer (1/4 inch)
4. Locknut (1/4 inch)

4

Installing the Baffle

Parts needed for this procedure:

1	Baffle (square edge) **(36-inch and 60-inch decks only)**
1	Baffle (round edge) **(48-inch and 54-inch decks only)**
1	Bagger guard **(48-inch and 54-inch decks only)**
2	Bolt (5/16 x 1 inch)
2	Carriage bolt
1	Bolt (3/8 x 1 inch)
1	Button-head bolt
3	Nut (5/16 inch)
1	Locknut (3/8 inch)

Procedure

Note: For 48-inch and 54-inch decks use the rounded-edge-discharge baffle; for 36-inch and 60-inch decks use the square-edge-discharge baffle (Figure 7).

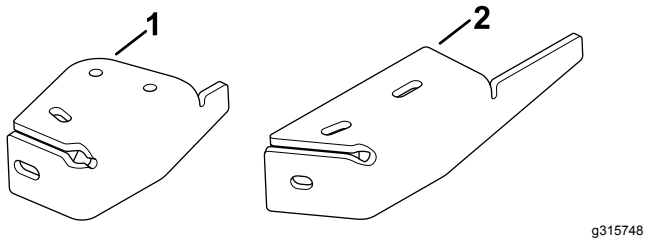

Figure 7

1. Rounded-edge-discharge baffle
2. Square-edge-discharge baffle

1. Remove the 2 bolts and 2 nuts securing the existing discharge baffle to the deck and remove the discharge baffle (Figure 8).

   Note: Retain the baffle and corresponding hardware for converting back to side discharge.

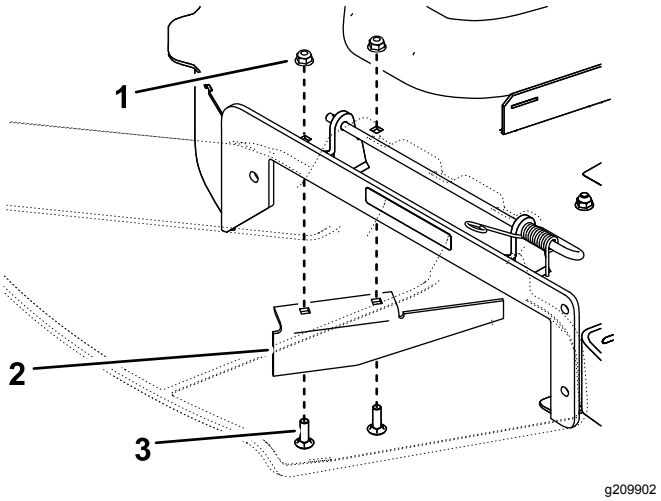

Figure 8

54-inch deck shown

1. Nut
2. Cutoff baffle
3. Bolt

2. **For 36-inch and 60-inch decks:** Install the square-edge-discharge baffle with appropriate hardware as shown in Figure 9.

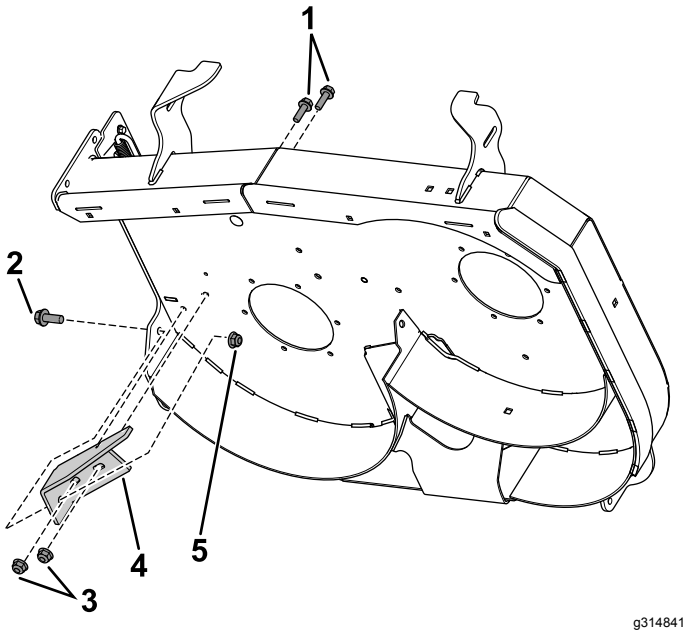

Figure 9

1. **For 36-inch decks:** Bolt (5/16 x 1 inch); **for 60-inch decks:** Carriage bolt
2. **For 36-inch decks:** Bolt (3/8 x 1 inch); **for 60-inch decks:** Button-head bolt
3. Nut (5/16 inch)
4. Square-edge-discharge baffle
5. **For 36-inch decks:** Locknut (3/8 inch); **for 60-inch decks:** Nut (5/16 inch)

3. **For 48-inch and 54-inch decks:** Install the rounded-edge-discharge baffle and bagger guard with appropriate hardware as shown in Figure 10.

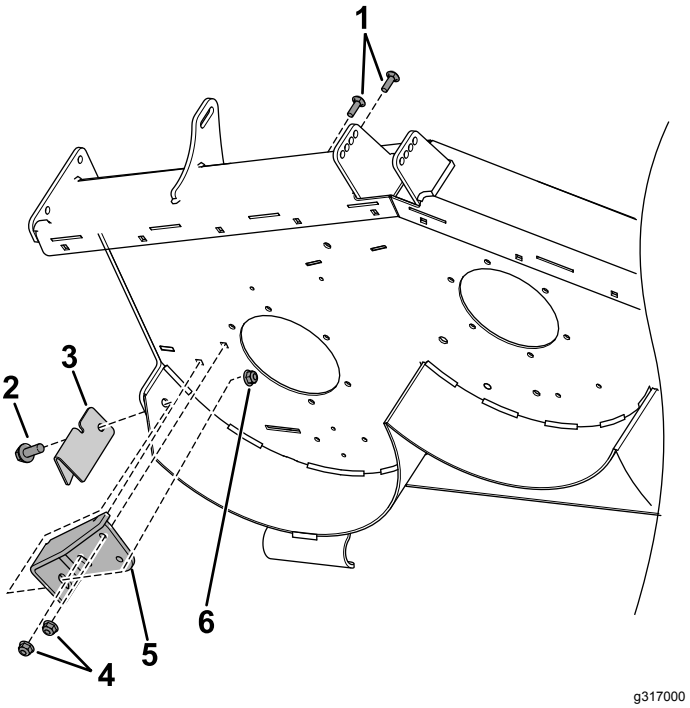

Figure 10

1. Carriage bolt
2. Bolt (3/8 x 1 inch)
3. Bagger guard
4. Nut (5/16 inch)
5. Rounded-edge-discharge baffle
6. Locknut (3/8 inch)

5

Removing the Deflector

No Parts Required

Procedure

1. Remove the cotter pin (Figure 11).

   Retain the pin for use in Step 4 in 6 Installing the Bagger onto the Machine (page 6).

2. Disengage the spring from the notch in the deflector bracket and slide the rod out of the welded deck brackets, spring, and discharge deflector (Figure 11).

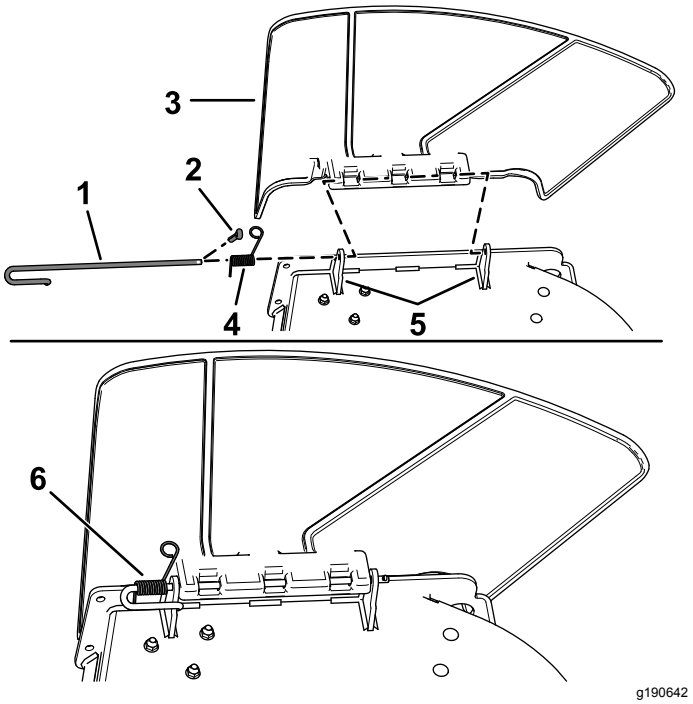

Figure 11

1. Rod
2. Cotter pin
3. Deflector
4. Spring
5. Deck brackets
6. Spring installed over the rod

3. Remove the discharge deflector.

⚠ WARNING

An uncovered discharge opening could allow the machine to throw objects at you or bystanders and result in serious injury. Also, contact with the blade could occur.

Never operate the machine unless you install a mulch plate, discharge deflector, or grass collection system.

6

Installing the Bagger onto the Machine

No Parts Required

Procedure

1. Position the front and rear tab on the bagger mounting bracket onto the machine as shown in Figure 12.
2. Install the spring onto the straight end of the rod.
3. Position the spring on the rod as shown so that the shorter spring end is coming from under the rod before the bend and going over the rod as it returns from the bend.
4. Install the previously removed rod and corresponding cotter pin; refer to Figure 12.

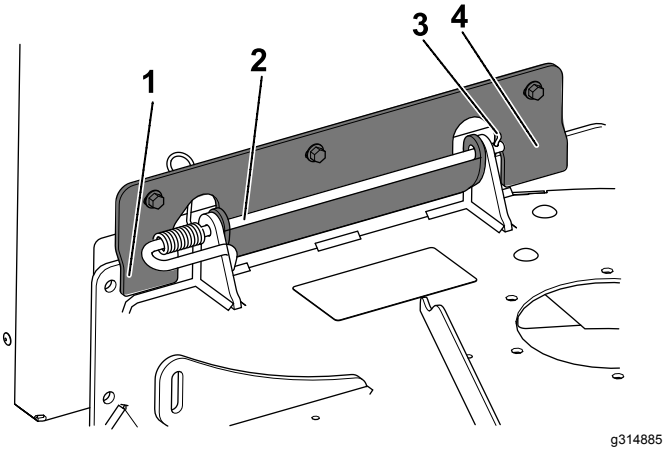

Figure 12

1. Mounting bracket front tab
2. Chute pin
3. Hairpin
4. Mounting bracket rear tab

5. If you are installing the bagger for the first time or are moving it to a machine of a different size, move the bagger clamp to the appropriate hole in the back plate for your machine size.

Note: Do not remove or install the clamp to remove or install the back plate when using the bagger on a machine of the same size. Lift the back plate off of the machine.

6. Insert the lower pins of the bagger frame into the holes on the back plate (Figure 13).
7. Lift the latches and slide the frame side pins into them (Figure 13).
8. Lower the latches to secure the bagger.

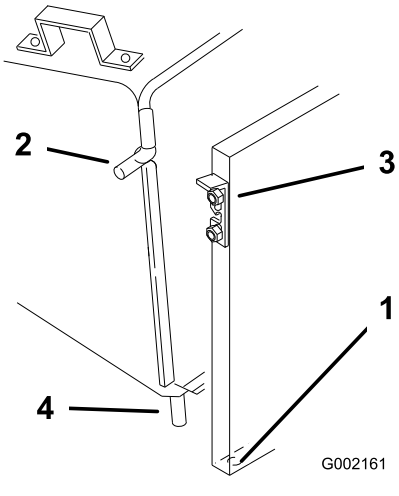

Figure 13

1. Back plate holes
2. Frame pin
3. Latch
4. Lower pin

Product Overview

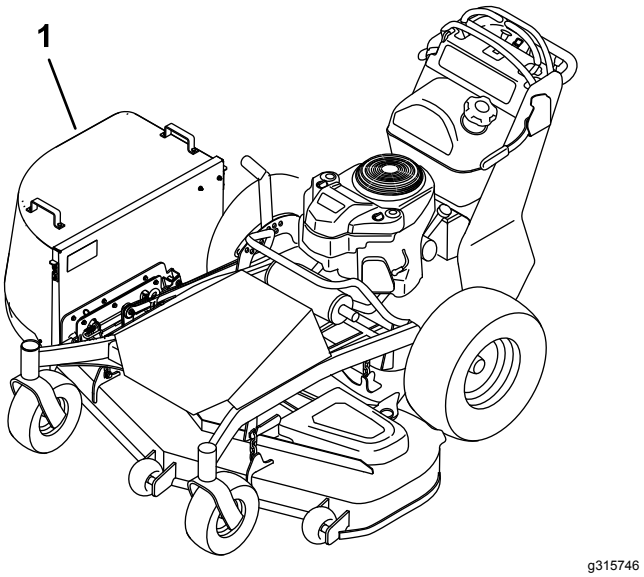

Figure 14

1. Bagger

Specifications

Machine Dimensions with Soft Side Bagger

Model	Width	Length	Height	Weight
36-inch Machines	150 cm (59 inches)	No change		When the bagger is full, it adds approximately 41 kg (90 lb) to the machine weight.
48-inch Machines	183 cm (72 inches)			
54-inch Machines	193 cm (76 inches)			
60-inch Machines	208 cm (82 inches)			

Operation

General Safety

- Become familiar with all operating and safety instructions in the Operator's Manual for your machine before using this attachment.
- Before doing any of the following procedures or leaving the operator’s position:
  - Disengage the PTO and engage the parking brake.
  - Shut off the engine, remove the key, and wait for all moving parts to stop.
- Do not remove the bag while the engine is running.
- Always shut off the engine, wait for all moving parts to stop, and remove the key before clearing an obstruction from the bagging system.
- Do not do maintenance or repairs while the engine is running.

Removing the Bagger from the Machine

1. Disengage the PTO and engage the parking brake.
2. Shut off the engine, remove the key, and wait for all moving parts to stop before leaving the operating position.
3. Lift the latches and remove and empty the grass bag.
4. Lift the back plate off of the machine.

Emptying the Bagger

1. Disengage the PTO and engage the parking brake.
2. Shut off the engine, remove the key, and wait for all moving parts to stop before leaving the operating position.
3. Lift the latches and remove and empty the grass bag.
4. Insert the lower pins of the bagger frame into the holes in the back plate (Figure 13).
5. Lift the latches and slide the frame side pins into them (Figure 13).
6. Lower the latches to secure the bagger.

Clearing Obstructions

1. Disengage the PTO and engage the parking brake.
2. Shut off the engine, remove the key, and wait for all moving parts to stop before leaving the operating position.
3. Lift the latches and remove and empty the grass bag.
4. Use a stick or similar object, not your hands to remove and clear the obstruction from the machine.
5. Insert the lower pins of the bagger frame into the holes in the back plate (Figure 13).
6. Lift the latches and slide the frame side pins into them (Figure 13).
7. Lower the latches to secure the bagger.

Operating Tips

Machine Width

The machine is wider with the bagger installed. By turning too sharply in confined places you may damage the bagger.

Mowing Side

Mow with the left side towards objects such as trees or landscaping. Do not mow with the right side of the machine near objects because you could damage the bagger.

Mowing Rough Terrain

When mowing rough or uneven terrain, use care to avoid damaging the bagger against the turf.

Avoid Cutting Too Low

Air flow is required to cut grass and propel it into the bag. Setting the height-of-cut too low, especially in heavy or long grass, can restrict the air flow and plug the machine or grass catcher.

Avoid Plugging

To avoid plugging when cutting long grass, double-cut the grass, first at a high height-of-cut and then lower the machine to the desired setting. Also, try to leave one side of the machine out of the uncut grass, allowing air to be drawn into the machine housing.

Maintenance

Inspecting the Bagger

Service Interval: After the first 10 hours

Before storage

1. Inspect all the fasteners and latches; replace any that are missing or damaged.
2. Inspect the bag for damage and replace any damaged parts.
3. Tighten all hardware.

⚠ WARNING

You or bystanders could be severely injured by flying debris or thrown objects that may pass through torn, worn, or deteriorated grass bags.

- **Check the grass bags for holes, rips, wear, and other deterioration.**
- **If the bag has deteriorated, install new grass bags supplied by the manufacturer of this bagger attachment.**

Cleaning the Bagger

Service Interval: Before each use or daily

Clean the bagger after each use.

1. Remove the bag and wash the back plate and the underside of the machine. Use a mild automotive detergent to remove stubborn dirt.

   Important: **Do not pressure wash the bagger.**
2. Remove matted grass from all parts.
3. After washing, let all parts dry thoroughly.

   Note: Do not wash the grass bag.

Storing the Grass Catcher

1. Clean the bagger; refer to Cleaning the Bagger (page 9).
2. Inspect the bagger for damage; refer to Inspecting the Bagger (page 9).
3. Ensure that the bag is empty and dry.
4. Store the bagger in a clean, dry place, out of direct sunlight. This extends the life of the bagger. If you must store it outside, cover it with a weatherproof cover.

Notes:

Notes:

TORO®

Count on it.