Form No. 3437-919 Rev B

TORO®

Count on it.

Operator's Manual

# TX 525 Compact Tool Carrier

**Model No. 22323—Serial No. 405700000 and Up**
**Model No. 22323G—Serial No. 405700000 and Up**
**Model No. 22324—Serial No. 405700000 and Up**

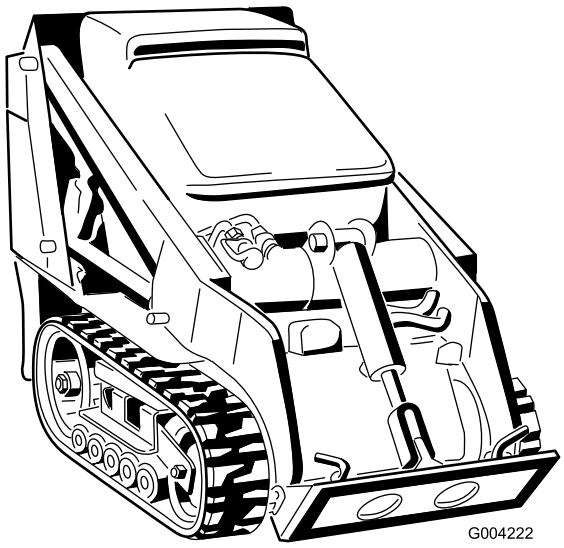

G004222

Register at www.Toro.com.
Original Instructions (EN)

CE

*3437-919* B

This product complies with all relevant European directives; for details, please see the separate product specific Declaration of Conformity (DOC) sheet.

It is a violation of California Public Resource Code Section 4442 or 4443 to use or operate the engine on any forest-covered, brush-covered, or grass-covered land unless the engine is equipped with a spark arrester, as defined in Section 4442, maintained in effective working order or the engine is constructed, equipped, and maintained for the prevention of fire.

The enclosed engine owner's manual is supplied for information regarding the US Environmental Protection Agency (EPA) and the California Emission Control Regulation of emission systems, maintenance, and warranty. Replacements may be ordered through the engine manufacturer.

**⚠ WARNING**

**CALIFORNIA**
**Proposition 65 Warning**

**Diesel engine exhaust and some of its constituents are known to the State of California to cause cancer, birth defects, and other reproductive harm.**

**Battery posts, terminals, and related accessories contain lead and lead compounds, chemicals known to the State of California to cause cancer and reproductive harm. Wash hands after handling.**

**Use of this product may cause exposure to chemicals known to the State of California to cause cancer, birth defects, or other reproductive harm.**

# Introduction

This machine is a compact tool carrier intended for use in various earth and materials moving activities for landscaping and construction work. It is designed to operate a wide variety of attachments each of which perform a specialized function. Using this product for purposes other than its intended use could prove dangerous to you and bystanders.

Read this information carefully to learn how to operate and maintain your product properly and to avoid injury and product damage. You are responsible for operating the product properly and safely.

Visit www.Toro.com for product safety and operation training materials, accessory information, help finding a dealer, or to register your product.

Whenever you need service, genuine Toro parts, or additional information, contact an Authorized Service Dealer or Toro Customer Service and have the model and serial numbers of your product ready. Figure 1 identifies the location of the model and serial numbers on the product. Write the numbers in the space provided.

***Important:*** **With your mobile device, you can scan the QR code on the serial number decal (if equipped) to access warranty, parts, and other product information.**

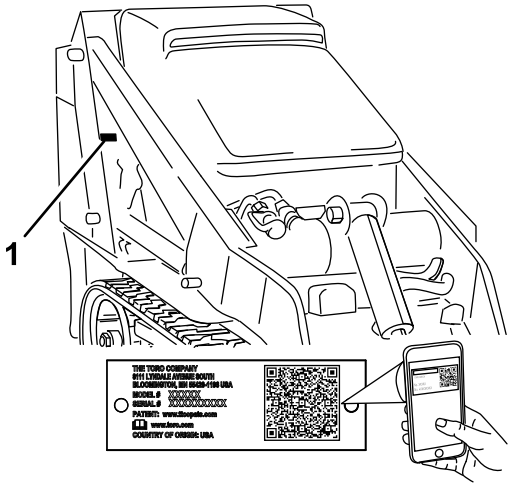


g243442

**Figure 1**

1. Model and serial number location

**Model No.** _____

**Serial No.** _____

This manual identifies potential hazards and has safety messages identified by the safety-alert symbol (Figure 2), which signals a hazard that may cause

© 2020—The Toro® Company
8111 Lyndale Avenue South
Bloomington, MN 55420



Contact us at www.Toro.com.
Printed in the USA
All Rights Reserved

serious injury or death if you do not follow the recommended precautions.



g000502

**Figure 2**

1. Safety-alert symbol

This manual uses 2 words to highlight information. **Important** calls attention to special mechanical information and **Note** emphasizes general information worthy of special attention.

# Contents


Safety ..... 4
General Safety ..... 4
Safety and Instructional Decals ..... 5
Product Overview ..... 9
Controls ..... 9
Specifications ..... 13
Attachments/Accessories ..... 13
Before Operation ..... 13
Before Operation Safety ..... 13
Adding Fuel ..... 14
Performing Daily Maintenance ..... 15
During Operation ..... 15
During Operation Safety ..... 15
Starting the Engine ..... 16
Driving the Machine ..... 16
Shutting Off the Engine ..... 17
Using Attachments ..... 17
After Operation ..... 19
After Operation Safety ..... 19
Moving a Non-Functioning Machine ..... 19
Hauling the Machine ..... 19
Lifting the Machine ..... 21
Maintenance ..... 22
Maintenance Safety ..... 22
Recommended Maintenance Schedule(s) ..... 22
Pre-Maintenance Procedures ..... 23
Using the Cylinder Lock ..... 23
Accessing Internal Components ..... 24
Lubrication ..... 26
Greasing the Machine ..... 26
Engine Maintenance ..... 26
Engine Safety ..... 26
Servicing the Air Cleaner ..... 26
Servicing the Engine Oil ..... 27
Fuel System Maintenance ..... 29
Checking the Fuel Lines and Connections ..... 29
Draining the Fuel Filter/Water Separator ..... 29
Replacing the Fuel Filter Canister and In-Line Filter ..... 30
Bleeding the Fuel System ..... 30
Draining the Fuel Tank(s) ..... 31
Electrical System Maintenance ..... 31
Electrical System Safety ..... 31
Servicing the Battery ..... 31
Servicing the Fuses ..... 33
Drive System Maintenance ..... 34
Servicing the Tracks ..... 34
Cooling System Maintenance ..... 38
Cooling System Safety ..... 38
Servicing the Cooling System ..... 38
Brake Maintenance ..... 39
Testing the Parking Brake ..... 39
Belt Maintenance ..... 40
Checking the Condition of the Hydraulic Pump Belt ..... 40
Controls System Maintenance ..... 40
Adjusting the Controls ..... 40
Hydraulic System Maintenance ..... 42
Hydraulic System Safety ..... 42
Relieving Hydraulic Pressure ..... 42
Hydraulic Fluid Specifications ..... 43
Checking the Hydraulic-Fluid Level ..... 43
Replacing the Hydraulic Filter ..... 44
Changing the Hydraulic Fluid ..... 45
Cleaning ..... 46
Removing Debris ..... 46
Cleaning the Chassis ..... 46
Storage ..... 46
Storage Safety ..... 46
Storage ..... 46
Troubleshooting ..... 47

# Safety

**⚠ DANGER**

**There may be buried utility lines in the work area. Digging into them may cause a shock or an explosion.**

**Have the property or work area marked for buried lines and do not dig in marked areas. Contact your local marking service or utility company to have the property marked (for example, in the US, call 811 or in Australia, call 1100 for the nationwide marking service).**

# General Safety

**⚠ DANGER**

**There may be buried utility lines in the work area. Digging into them may cause a shock or an explosion.**

**Have the property or work area marked for buried lines and do not dig in marked areas. Contact your local marking service or utility company to have the property marked (for example, in the US, call 811 or in Australia, call 1100 for the nationwide marking service).**

Always follow all safety instructions to avoid serious injury or death.

- Do not carry a load with the arms raised; always carry loads close to the ground.
- Slopes are a major factor related to loss-of-control and tip-over accidents, which can result in severe injury or death. Operating the machine on any slope or uneven terrain requires extra caution.
- Operate the machine up and down slopes with the heavy end of the machine uphill and the load close to the ground. Weight distribution changes with attachments. An empty bucket makes the rear of the machine the heavy end, and a full bucket makes the front of the machine the heavy end. Most other attachments make the front of the machine the heavy end.
- Have the property or work area marked for buried lines and other objects, and do not dig in marked areas.
- Read and understand the content of this *Operator's Manual* before starting the engine.
- Use your full attention while operating the machine. Do not engage in any activity that causes distractions; otherwise, injury or property damage may occur.
- Never allow children or untrained people to operate the machine.
- Keep your hands and feet away from the moving components and attachments.
- Do not operate the machine without the guards and other safety protective devices in place and working on the machine.
- Keep bystanders and children out of the operating area.
- Stop the machine, shut off the engine, and remove the key before servicing, fueling, or unclogging the machine.

Improperly using or maintaining this machine can result in injury. To reduce the potential for injury, comply with these safety instructions and always pay attention to the safety-alert symbol ⚠, which means Caution, Warning, or Danger—personal safety instruction. Failure to comply with these instructions may result in personal injury or death.

# Safety and Instructional Decals

Safety decals and instructions are easily visible to the operator and are located near any area of potential danger. Replace any decal that is damaged or missing.




decalbatterysymbols

**Battery Symbols**

Some or all of these symbols are on your battery.

1. Explosion hazard
2. No fire, open flame, or smoking
3. Caustic liquid/chemical burn hazard
4. Wear eye protection.
5. Read the *Operator's Manual*.
6. Keep bystanders away from the battery.
7. Wear eye protection; explosive gases can cause blindness and other injuries.
8. Battery acid can cause blindness or severe burns.
9. Flush eyes immediately with water and get medical help fast.
10. Contains lead; do not discard

---

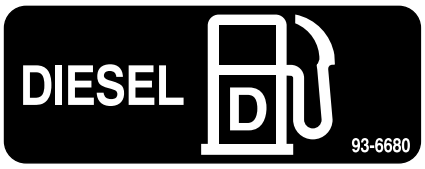


decal93-6680

**93-6680**

---

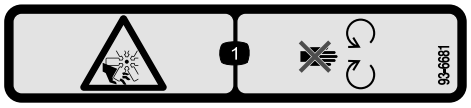


decal93-6681

**93-6681**

1. Cutting/dismemberment hazard, fan—stay away from moving parts.

---

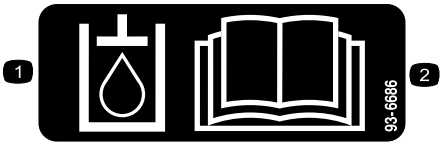


decal93-6686

**93-6686**

1. Hydraulic fluid
2. Read the *Operator's Manual*.

---

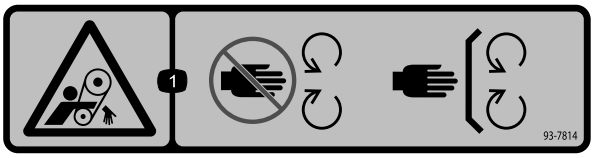


decal93-7814

**93-7814**

1. Entanglement hazard, belt—stay away from moving parts; keep all guards and shields in place.

---

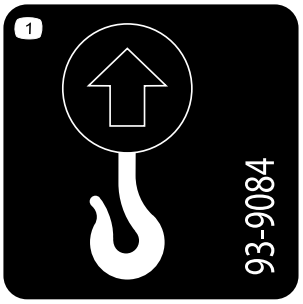


decal93-9084

**93-9084**

1. Lift point/Tie-down point

---

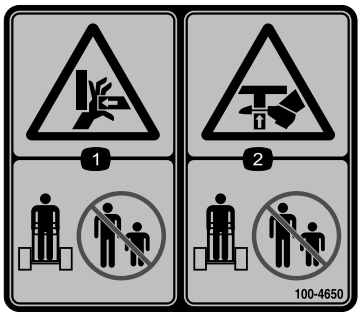


decal100-4650

**100-4650**

1. Crushing hazard of hand—keep bystanders away.
2. Crushing hazard of foot—keep bystanders away.

---




decal100-8821

**100-8821**

1. Crushing hazard from above; cutting hazard of hand—stay away from the front of the traction unit when the loader arms are raised.

---

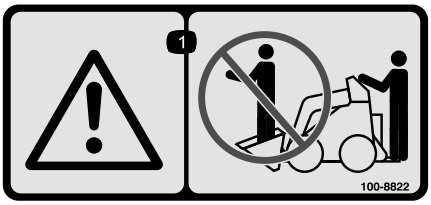


decal100-8822

**100-8822**

1. Warning—do not carry passengers.

---




decal106-6755

**106-6755**

1. Engine coolant under pressure.
2. Explosion hazard—read the *Operator's Manual.*
3. Warning—do not touch the hot surface.
4. Warning—read the *Operator's Manual.*

---

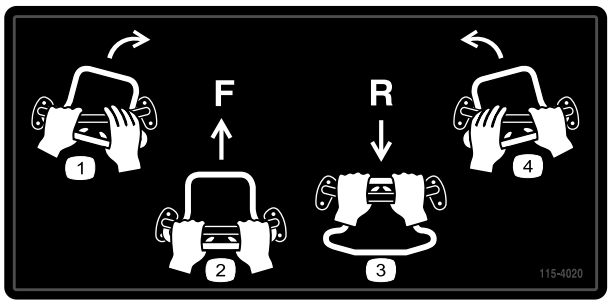


decal115-4020

**115-4020**

1. Turn right
2. Forward
3. Reverse
4. Turn left

---

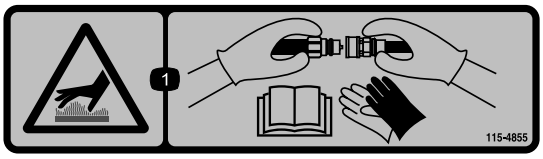


decal115-4855

**115-4855**

1. Hot surface/burn hazard—wear protective gloves when handling the hydraulic couplers and read the *Operator's Manual* for information on handling hydraulic components.

---

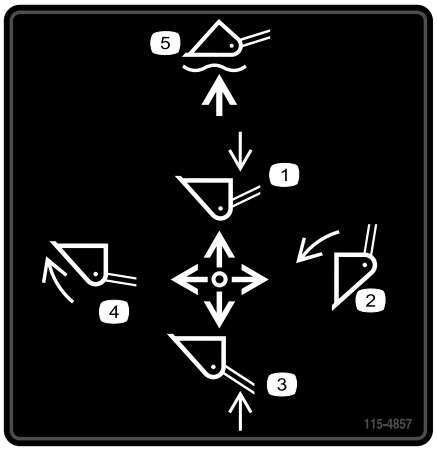


decal115-4857

**115-4857**

1. Lower the loader arms.
2. Dump the bucket.
3. Raise the loader arms.
4. Curl the bucket.
5. Float the bucket on the ground.

---




decal115-4858

**115-4858**

1. Crushing hazard of hands or feet—install the cylinder lock.

---




decal115-4859

**115-4859**

1. Disengaged
2. Parking brake
3. Engaged

---

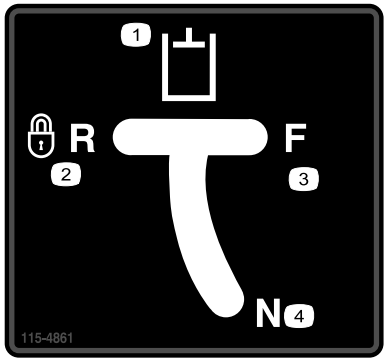


decal115-4861

**115-4861**

1. Auxiliary hydraulics
2. Locked reverse (detent)
3. Forward
4. Neutral (off)




decal115-4865

**115-4865**

1. Engine coolant
2. Read the *Operator's Manual*.

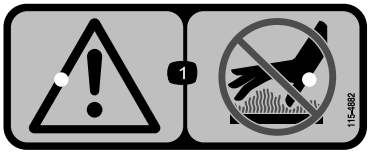


decal115-4882

**115-4882**

1. Warning—do not touch the hot surface.

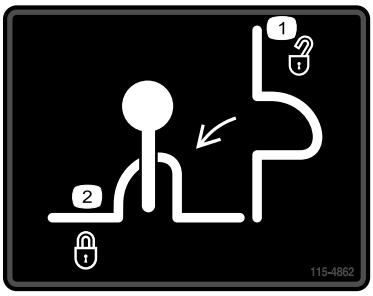


decal115-4862

**115-4862**

1. Loader-valve lock—unlocked
2. Loader-valve lock—locked

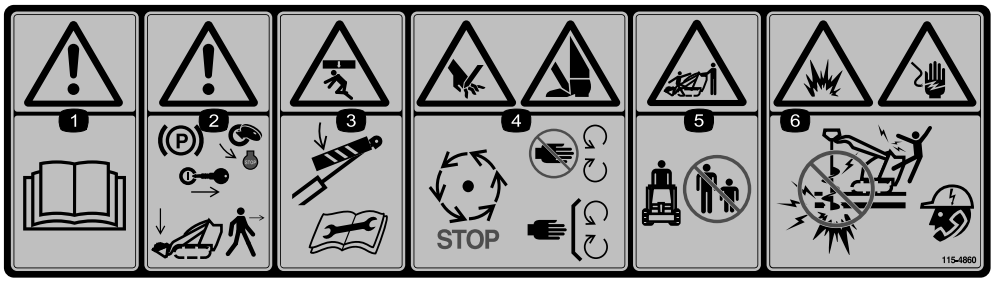


decal115-4860

**115-4860**

1. Warning—read the *Operator's Manual*.
2. Warning—lower the loader arms, engage the parking brake, shut off the engine, and remove the key before leaving the machine.
3. Crushing hazard from above—install the cylinder lock and read the *Operator's Manual* before performing maintenance.
4. Cutting hazard of hands or feet—wait for all moving parts to stop; stay away from moving parts; keep all guards and shields in place.
5. Crushing/dismemberment hazard of bystanders—keep bystanders away.
6. Explosion hazard; electrical shock hazard—do not operate if power lines may be present; call your local utility company.

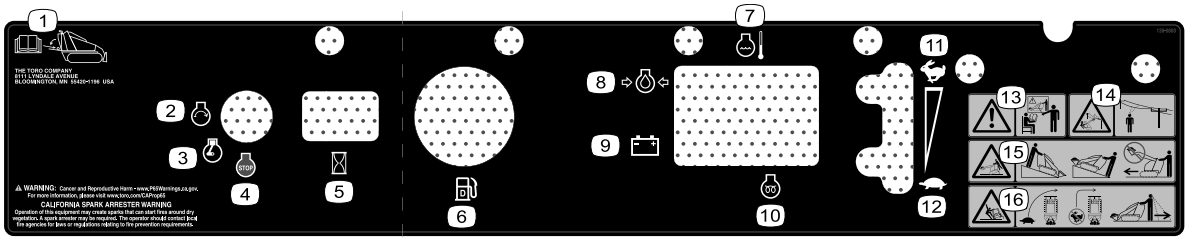


decal138-0800

**138-0800**

1. Read the *Operator's Manual* stored in your machine.
2. Engine—start
3. Engine—run
4. Engine—shut off
5. Hour meter
6. Fuel
7. Engine coolant temperature
8. Engine oil pressure
9. Battery
10. Glow plug
11. Fast
12. Slow
13. Warning—do not operate this machine unless you are trained.
14. Electrical shock hazard, overhead power lines—watch for overhead power lines.
15. Tipping hazard—move the traction unit with the heavy end uphill; carry loads low; do not drive the machine with the load raised.
16. Tipping hazard—drive slowly when turning; do not turn sharply while traveling fast; look behind and down when moving in reverse.

---

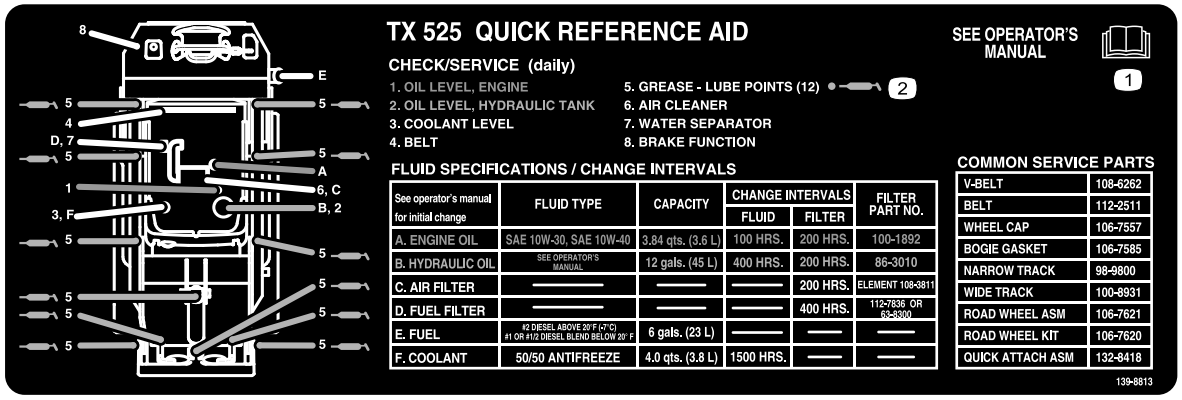


decal139-8813

**139-8813**

1. Read the *Operator's Manual*.
2. Grease points

---

# Product Overview

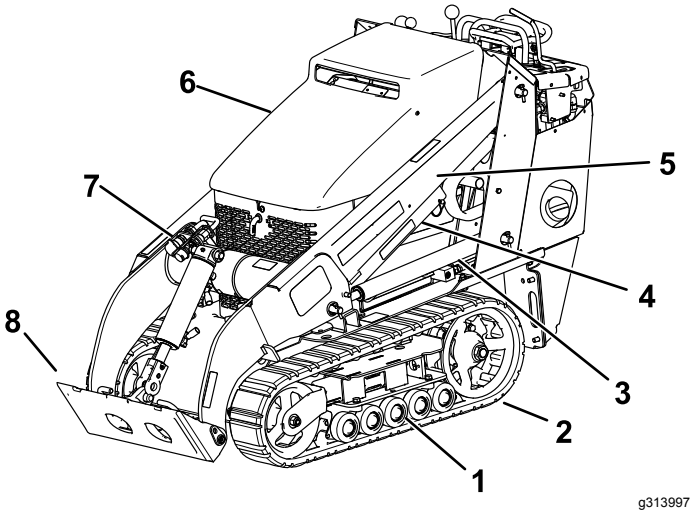


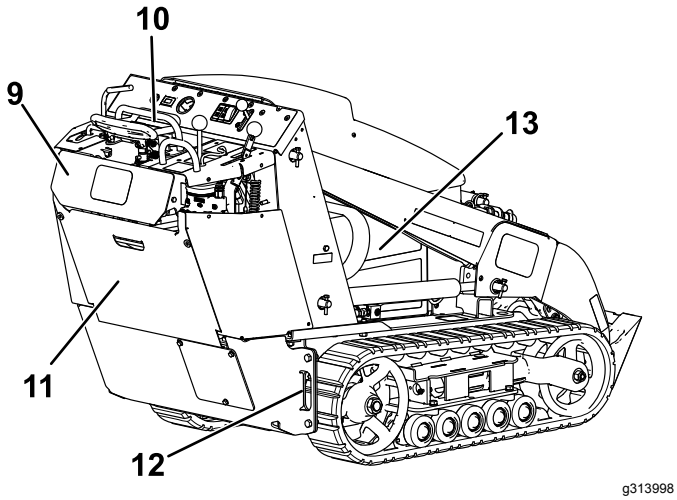


**Figure 3**

1. Road wheels
2. Track
3. Lift cylinder
4. Cylinder lock
5. Loader arms
6. Hood
7. Auxiliary hydraulic couplers
8. Mount plate
9. Reverse-safety plate
10. Control panel
11. Tie-down/lift loop
12. Rear-access cover
13. Side panel screen

# Controls

Become familiar with all the controls (Figure 4) before you start the engine and operate the traction unit.

## Control Panel

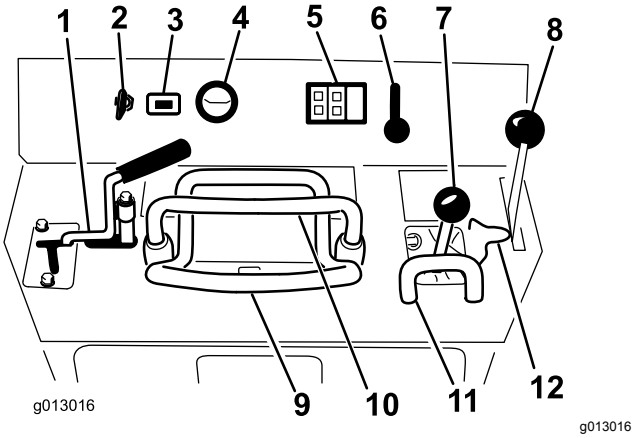


**Figure 4**

1. Auxiliary hydraulics lever
2. Key switch
3. Hour meter
4. Fuel gauge
5. Indicator lights and glow-plug switch
6. Throttle lever
7. Loader-arm/attachment-tilt lever
8. Parking-brake lever
9. Traction control
10. Reference bar
11. Loader-control-reference bar
12. Loader-valve lock

## Key Switch

The key switch, used to start and shut off the engine, has 3 positions: OFF, RUN, and START. Refer to Starting the Engine (page 16).

## Throttle Lever

Move the control forward to increase the engine speed and rearward to decrease speed.

## Reference Bar

When driving the traction unit, use the reference bar as a handle and a leverage point for controlling the traction control and the auxiliary-hydraulics lever. To ensure smooth, controlled operation, do not take both hands off the reference bar while operating the machine.

# Traction Control

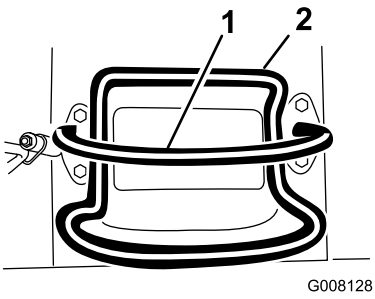


g008128

**Figure 5**

1. Reference bar
2. Traction control

- To move forward, move the traction control forward (Figure 6).

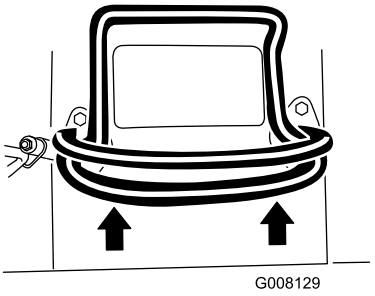


g008129

**Figure 6**

- To move rearward, move the traction control rearward (Figure 7).

  ***Important:*** **When reversing, look behind you for obstructions and keep your hands on the reference bar.**

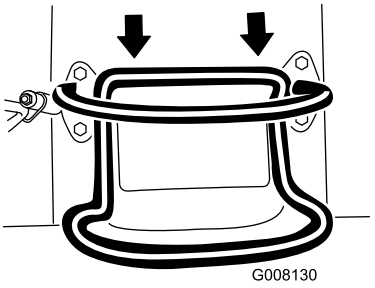


g008130

**Figure 7**

- To turn right, rotate the traction control clockwise (Figure 8).

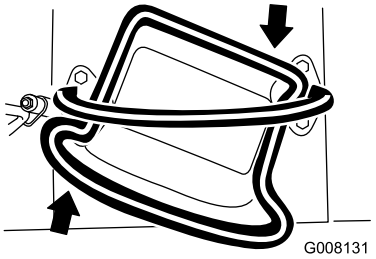


g008131

**Figure 8**

- To turn left, rotate the traction control counterclockwise (Figure 9).

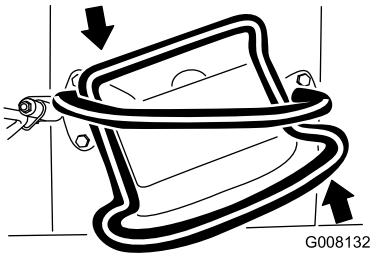


g008132

**Figure 9**

- To stop the machine, release the traction control (Figure 5).

**Note:** The farther you move the traction control in any direction, the faster the machine moves in that direction.

## Loader Arm/Attachment-Tilt Lever

- To tilt the attachment forward, slowly move the lever to the right (Figure 10).
- To tilt the attachment rearward, slowly move the lever to the left (Figure 10).
- To lower the loader arms, slowly move the lever forward (Figure 10).
- To raise the loader arms, slowly move the lever rearward (Figure 10).
- To lower the loader arms to a detent (float) position, push the lever fully forward (Figure 10).

  **Note:** This allows attachments such as the leveler and the hydraulic blade to follow the contours of the ground (i.e., float) when grading.

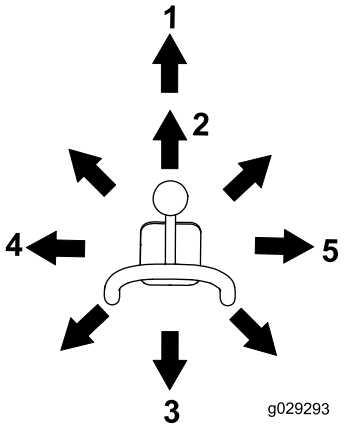


g029293

**Figure 10**

1. Detent (float) position
2. Lower the loader arms.
3. Raise the loader arms.
4. Tilt the attachment rearward.
5. Tilt the attachment forward.

By moving the lever to an intermediate position (e.g., forward and left), you can move the loader arms and tilt the attachment at the same time.

## Loader-Valve Lock

The loader-valve lock secures the loader arm/attachment-tilt lever so that you cannot push it forward. This helps to ensure that no one accidentally lowers the loader arms during maintenance. Secure the loader valve with the lock, in addition to the cylinder locks, any time you need to shut off the machine with the loader arms raised. Refer to Using the Cylinder Lock (page 23).

To set the lock, lift up on it so that it clears the hole in the control panel and swing it to the left, in front of the loader-arm lever, pushing it down into the locked position (Figure 11).

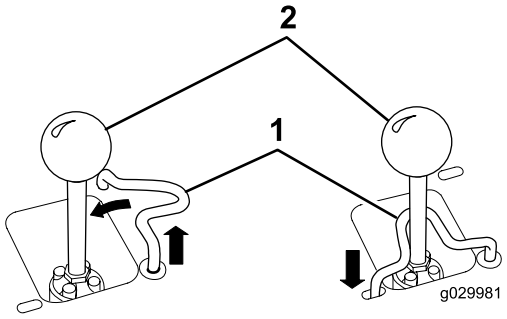


g029981

**Figure 11**

1. Loader arm/attachment-tilt lever
2. Loader-valve lock

## Loader-Control-Reference Bar

The loader-control-reference bar helps stabilize your hand while operating the loader arm/attachment-tilt lever (Figure 3).

## Auxiliary-Hydraulics Lever

- To operate a hydraulic attachment in the forward direction, rotate the auxiliary-hydraulics lever rearward and pull it down to the reference bar (Figure 12, number 1).
- To operate a hydraulic attachment in the reverse direction, rotate the auxiliary-hydraulics lever rearward, then move it left into the upper slot (Figure 12, number 2).

**Note:** If you release the lever while in the FORWARD position, the lever automatically returns to the NEUTRAL position (Figure 12, number 3). If it is in the REVERSE position, it remains there until you pull it out of the slot.

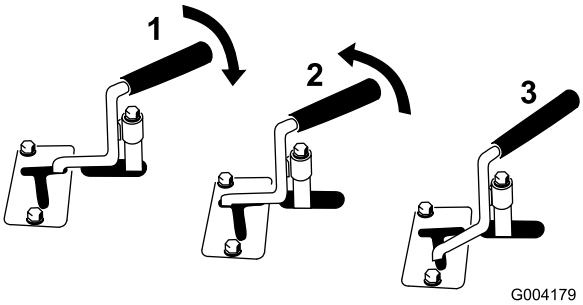


g004179

**Figure 12**

1. Forward-flow hydraulics
2. Reverse-flow hydraulics
3. Neutral

## Hour Meter

The hour meter displays the number of hours of operation that have been logged on the machine.

## Parking-Brake Lever

- To engage the parking brake, push the lever forward and to the left and then pull it rearward (Figure 13).

  **Note:** The traction unit may roll slightly before the brakes engage in the drive sprocket.

- To release the brake, push the lever forward and then right, into the notch (Figure 13).

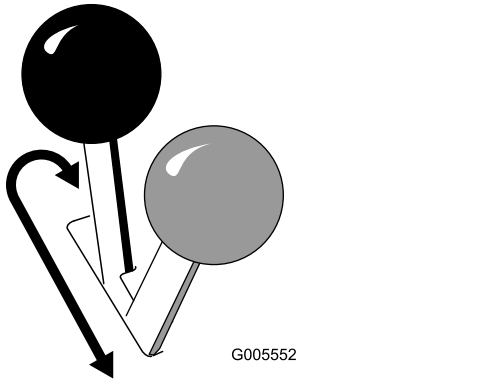


**Figure 13**

## Fuel Gauge

This gauge measures the amount of fuel in the fuel tank(s).

## Engine-Oil Pressure Light

If the engine-oil pressure gets too low, this light illuminates and an audible alarm sounds. If this happens, shut off the engine immediately and check the oil level. If it is low, add oil and look for possible leaks.

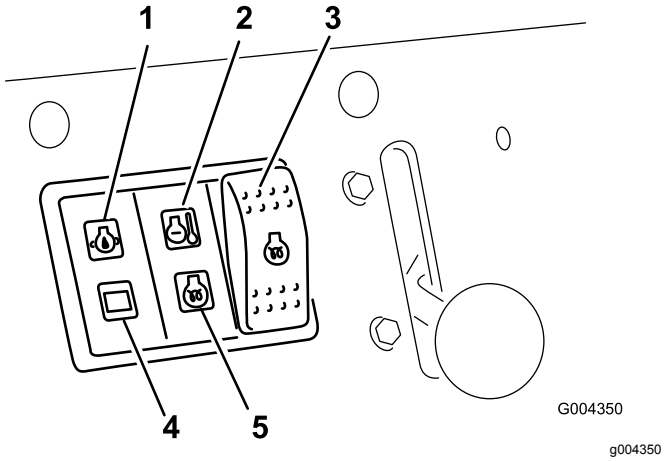


**Figure 14**

1. Engine-oil pressure light
2. Engine-coolant temperature light
3. Glow-plug switch
4. Battery-charge indicator light
5. Glow-plug light

## Battery-Charge Indicator Light

If the battery charge becomes too low, this light illuminates and an audible alarm sounds. If this happens, shut off the engine and charge or replace the battery. Check the tension of the alternator belt; refer to your engine owner's manual.

## Engine-Coolant Temperature Light

If the engine coolant gets too hot, this light illuminates and an audible alarm sounds. If this happens, shut off the engine and allow the traction unit to cool. Check the coolant level when the engine has fully cooled.

## Glow-Plug Light

This light illuminates while the glow plugs are charged and warming the engine.

## Glow-Plug Switch

Press and hold this switch for 10 seconds to activate the glow plugs before starting the engine.

# Specifications

**Note:** Specifications and design are subject to change without notice.

| **Model 22323** | |
|---|---|
| Width | 86 cm (34 inches) |
| Length | 180 cm (71 inches) |
| Height | 117 cm (46 inches) |
| Weight | 864 kg (1,904 lb) |
| Operating capacity (with standard bucket) | 251 kg (553 lb) |
| Tipping capacity (with standard bucket) | 717 kg (1,580 lb) |
| Wheelbase | 79 cm (31 inches) |
| Dump height (with narrow bucket) | 119 cm (47 inches) |
| Reach—fully raised (with narrow bucket) | 55 cm (22 inches) |
| Height to hinge pin (narrow bucket in highest position) | 168 cm (66 inches) |

| **Model 22324** | |
|---|---|
| Width | 104 cm (41 inches) |
| Length | 180 cm (71 inches) |
| Height | 109 cm (43 inches) |
| Weight | 913 kg (2,013 lb) |
| Operating capacity (with standard bucket) | 251 kg (553 lb) |
| Tipping capacity (with standard bucket) | 717 kg (1,580 lb) |
| Wheelbase | 79 cm (31 inches) |
| Dump height (with narrow bucket) | 119 cm (47 inches) |
| Reach—fully raised (with narrow bucket) | 55 cm (22 inches) |
| Height to hinge pin (narrow bucket in highest position) | 168 cm (66 inches) |

## Attachments/Accessories

A selection of Toro approved attachments and accessories is available for use with the machine to enhance and expand its capabilities. Contact your Authorized Service Dealer or authorized Toro distributor or go to www.Toro.com for a list of all approved attachments and accessories.

To ensure optimum performance and continued safety certification of the machine, use only genuine Toro replacement parts and accessories. Replacement parts and accessories made by other manufacturers could be dangerous, and such use could void the product warranty.

# Operation

**Note:** Determine the left and right sides of the machine from the normal operating position.

# *Before Operation*

## Before Operation Safety

### General Safety

- Never allow children or untrained people to operate or service the machine. Local regulations may restrict the age or require certified training of the operator. The owner is responsible for training all operators and mechanics.
- Become familiar with the safe operation of the equipment, operator controls, and safety decals.
- Always engage the parking brake (if equipped), shut off the engine, remove the key, wait for all moving parts to stop, and allow the machine to cool before adjusting, servicing, cleaning, or storing the machine.
- Know how to stop the machine and shut off the engine quickly.
- Check that the operator's presence controls, safety switches, and shields are attached and functioning properly. Do not operate the machine unless they are functioning properly.
- Locate the pinch-point areas marked on the machine and attachments; keep your hands and feet away from these areas.
- Before operating the machine with an attachment, ensure that the attachment is properly installed and that it is a genuine Toro attachment. Read all the attachment manuals.
- Evaluate the terrain to determine what accessories and attachments you need to properly and safely perform the job.
- Have the property or work area marked for buried lines and other objects, and do not dig in marked areas; note the location of unmarked objects and structures, such as underground storage tanks, wells, and septic systems.
- Inspect the area where you will use the equipment and remove all debris.
- Ensure that the area is clear of bystanders before operating the machine. Stop the machine if anyone enters the area.

## Fuel Safety

- Use extreme care when handling fuel. It is flammable and its vapors are explosive.
- Extinguish all cigarettes, cigars, pipes, and other sources of ignition.
- Use only an approved fuel container.
- Do not remove the fuel cap or fill the fuel tank while the engine is running or hot.
- Do not add or drain fuel in an enclosed space.
- Do not store the machine or fuel container where there is an open flame, spark, or pilot light, such as on a water heater or other appliance.
- If you spill fuel, do not attempt to start the engine; avoid creating any source of ignition until the fuel vapors have dissipated.
- Do not fill containers inside a vehicle or on a truck or trailer bed with a plastic liner. Always place containers on the ground, away from your vehicle before filling.
- Remove the equipment from the truck or trailer and refuel it while it is on the ground. If this is not possible, then refuel from a portable container rather than a fuel-dispenser nozzle.
- Keep the fuel-dispenser nozzle in contact with the rim of the fuel tank or container opening at all times until fueling is complete. Do not use a nozzle lock-open device.

# Adding Fuel

## Recommended Fuel

Use only clean, fresh diesel fuel or biodiesel fuels with low (<500 ppm) or ultra low (<15 ppm) sulfur content. The minimum cetane rating should be 40. Purchase fuel in quantities that you can use within 180 days to ensure fuel freshness.

Use summer-grade diesel fuel (No. 2-D) at temperatures above -7°C (20°F) and winter grade (No. 1-D or No. 1-D/2-D blend) below that temperature. Using winter-grade fuel at lower temperatures provides lower flash point and cold flow characteristics, which eases starting and reduces fuel filter plugging.

Using summer-grade fuel above -7°C (20°F) contributes toward longer fuel pump life and increased power compared to winter-grade fuel.

***Important:*** **Do not use kerosene or gasoline instead of diesel fuel. Failure to observe this caution will damage the engine.**

## Biodiesel Ready

This machine can also use a biodiesel blended fuel of up to B20 (20% biodiesel, 80% petrodiesel). The petrodiesel portion should be low or ultra low sulfur. Observe the following precautions:

- The biodiesel portion of the fuel must meet specification ASTM D6751 or EN14214.
- The blended fuel composition should meet ASTM D975 or EN590.
- Painted surfaces may be damaged by biodiesel blends.
- Use B5 (biodiesel content of 5%) or lesser blends in cold weather.
- Monitor seals, hoses, gaskets in contact with fuel as they may degrade over time.
- Fuel filter plugging may occur for a time after converting to biodiesel blends.
- Contact your distributor for more information on biodiesel.

## Filling the Fuel Tank(s)

1. Park the machine on a level surface, engage the parking brake (if equipped), and lower the loader arms.
2. Shut off the engine, remove the key, and allow the engine to cool.
3. Clean around the fuel-tank cap and remove it (Figure 15).

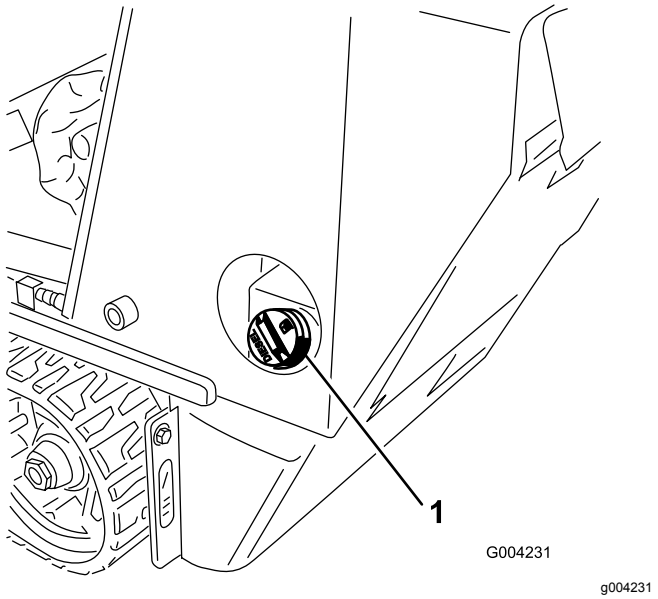


**Figure 15**

1. Fuel-tank cap

4. Fill the tank to about 2.5 cm (1 inch) below the top of the tank, not the filler neck, with fuel.

   ***Important:*** **This space in the tank allows fuel to expand. Do not fill the fuel tank completely full.**

5. Install the fuel-tank cap securely, turning it until it clicks.
6. Wipe up any spilled fuel.

# Performing Daily Maintenance

Before starting the machine each day, perform the Each Use/Daily procedures listed in the Maintenance (page 22).

***Important:*** **Check the hydraulic-fluid level and bleed the fuel system before starting the engine for the first time; refer to Checking the Hydraulic-Fluid Level (page 43) and Bleeding the Fuel System (page 30).**

# *During Operation*

# During Operation Safety

## General Safety

- Do not carry a load with the arms raised. Always carry loads close to the ground.
- Do not exceed the rated operating capacity, as the machine may become unstable, which may result in loss of control.
- Use only Toro-approved attachments and accessories. Attachments can change the stability and the operating characteristics of the machine.
- For machines with a platform:
  - Lower the loader arms before stepping off the platform.
  - Do not try to stabilize the machine by putting your foot on the ground. If you lose control of the machine, step off the platform and away from the machine.
  - Do not place your feet under the platform.
  - Do not move the machine unless you are standing with both feet on the platform and your hands are holding onto the reference bars.
- Use your full attention while operating the machine. Do not engage in any activity that causes distractions; otherwise, injury or property damage may occur.
- Look behind and down before backing up to ensure that the path is clear.
- Never jerk the controls; use a steady motion.
- The owner/user can prevent and is responsible for accidents that may cause personal injury or property damage.
- Wear appropriate clothing including gloves, eye protection, long pants, substantial slip-resistant footwear, and hearing protection. Tie back long hair and do not wear loose clothing or loose jewelry.
- Do not operate the machine when you are tired, ill, or under the influence of alcohol or drugs.
- Never carry passengers and keep pets and bystanders away from the machine.
- Operate the machine only in good light, keeping away from holes and hidden hazards.
- Ensure that all the drives are in neutral and engage the parking brake (if equipped) before starting the engine. Start the engine only from the operator's position.
- Use care when approaching blind corners, shrubs, trees, or other objects that may obscure vision.
- Slow down and use caution when making turns and crossing roads and sidewalks. Watch for traffic.
- Stop the attachment when you are not working.
- Stop the machine, shut off the engine, remove the key, and inspect the machine if you strike an object. Make any necessary repairs before resuming operation.
- Never run an engine in an enclosed area.
- Never leave a running machine unattended.
- Before leaving the operating position, do the following:
  - Park the machine on a level surface.
  - Lower the loader arms and disengage the auxiliary hydraulics.
  - Engage the parking brake (if equipped).
  - Shut off the engine and remove the key.
- Do not operate the machine when there is the risk of lightning.
- Operate the machine only in areas where there is sufficient clearance for you to safely maneuver. Be aware of obstacles in close proximity to you. Failure to maintain adequate distance from trees, walls, and other barriers may result in injury as the machine backs up during operation if you are not attentive to the surroundings.
- Check for overhead clearance (i.e., electrical wires, branches, and doorways) before driving under any objects and do not contact them.
- Do not overfill the attachment and always keep the load level when raising the loader arms. Items in the attachment could fall and cause injury.

## Slope Safety

- **Operate the machine up and down slopes with the heavy end of the machine uphill.** Weight distribution changes with attachments. An empty bucket makes the rear of the machine the heavy end, and a full bucket makes the front of the machine the heavy end. Most other attachments make the front of machine the heavy end.
- Raising the loader arms on a slope affects the stability of the machine. Keep the loader arms in the lowered position when on slopes.
- Slopes are a major factor related to loss of control and tip-over accidents, which can result in severe injury or death. Operating the machine on any slope or uneven terrain requires extra caution.
- Establish your own procedures and rules for operating on slopes. These procedures must include surveying the site to determine which slopes are safe for machine operation. Always use common sense and good judgment when performing this survey.
- Slow down and use extra care on hillsides. Ground conditions can affect the stability of the machine.
- Avoid starting or stopping on a slope. If the machine loses traction, proceed slowly, straight down the slope.
- Avoid turning on slopes. If you must turn, turn slowly and keep the heavy end of the machine uphill.
- Keep all movements on slopes slow and gradual. Do not make sudden changes in speed or direction.
- If you feel uneasy operating the machine on a slope, do not do it.
- Watch for holes, ruts, or bumps, as uneven terrain could overturn the machine. Tall grass can hide obstacles.
- Use caution when operating on wet surfaces. Reduced traction could cause sliding.
- Evaluate the area to ensure that the ground is stable enough to support the machine.
- Use caution when operating the machine near the following:
  - Drop-offs
  - Ditches
  - Embankments
  - Bodies of water

  The machine could suddenly roll over if a track goes over the edge or the edge caves in. Maintain a safe distance between the machine and any hazard.
- Do not remove or add attachments on a slope.
- Do not park the machine on a hillside or slope.

# Starting the Engine

1. Ensure that the auxiliary hydraulics lever is in the NEUTRAL position.
2. Move the throttle lever midway between SLOW and FAST positions.
3. Insert the key into the key switch and turn it to the RUN position.
4. Press the glow-plug switch and hold it for 10 seconds.
5. Turn the key to the START position. When the engines starts, release the key.

   ***Important:*** **Do not engage the starter for more than 10 seconds at a time. If the engine fails to start, wait 30 seconds for the starter to cool down between attempts. Failure to follow these instructions could burn out the starter motor.**
6. Move the throttle lever to the FAST position.

   ***Important:*** **Running the engine at high speeds when the hydraulic system is cold (i.e., when the air temperature is at or below freezing) could damage the hydraulic system. When starting the engine in cold conditions, allow it to run in the middle throttle position for 2 to 5 minutes before moving the throttle to the FAST position.**

   **Note:** If outdoor temperature is below freezing, store the traction unit in a garage to keep it warmer and to aid in starting.

# Driving the Machine

Use the traction control to move the machine. The farther you move the traction control in any direction, the faster the machine moves in that direction. Release the traction control to stop the machine.

The throttle control regulates the engine speed as measured in rpm (revolutions per minute). Place the throttle lever in the FAST position for best performance. You can, however, use the throttle position to operate at slower speeds.

# Shutting Off the Engine

1. Park the machine on a level surface, engage the parking brake (if equipped), and lower the loader arms.
2. Ensure that the auxiliary hydraulics lever is in the NEUTRAL position.
3. Move the throttle lever to the SLOW position.
4. If the engine has been working hard or is hot, let it idle for a minute before turning the key switch to the OFF position.

   **Note:** This helps to cool the engine before you shut it off. In an emergency, you can shut off the engine immediately.
5. Turn the key switch to the OFF position and remove the key.

**⚠ CAUTION**

**A child or untrained bystander could attempt to operate the traction unit and be injured.**

**Remove the key from the key switch when leaving the traction unit, even if just for a few seconds.**

# Using Attachments

## Installing an Attachment

***Important:*** **Use only Toro-approved attachments. Attachments can change the stability and the operating characteristics of the machine. The warranty of the machine may be voided if you use the machine with unapproved attachments.**

***Important:*** **Before installing the attachment, ensure that the mount plates are free of any dirt or debris and that the pins rotate freely. If the pins do not rotate freely, grease them.**

1. Position the attachment on a level surface with enough space behind it to accommodate the machine.
2. Start the engine.
3. Tilt the attachment mount plate forward.
4. Position the mount plate into the upper lip of the attachment receiver plate (Figure 16).

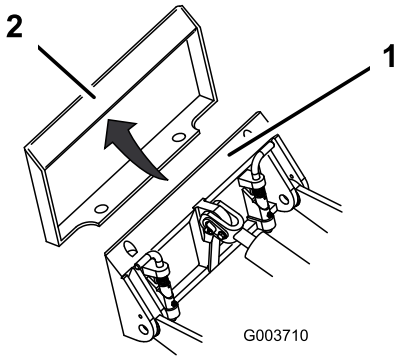


g003710

**Figure 16**

1. Mount plate
2. Receiver plate

5. Raise the loader arms while tilting back the mount plate at the same time.

   ***Important:*** **Raise the attachment enough to clear the ground and tilt the mount plate all the way back.**
6. Shut off the engine and remove the key.
7. Engage the quick-attach pins, ensuring that they are fully seated in the mount plate (Figure 17).

   ***Important:*** **If the pins do not rotate to the engaged position, the mount plate is not fully aligned with the holes in the attachment receiver plate. Check the receiver plate and clean it if necessary.**

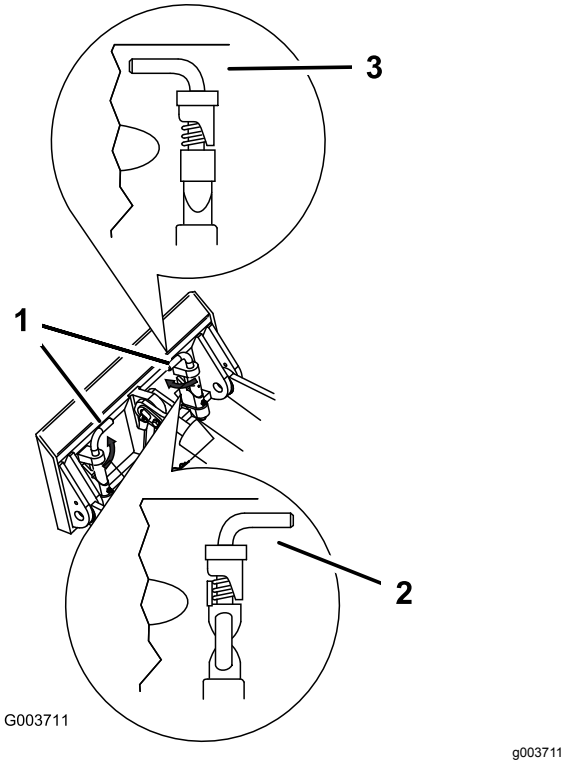


**Figure 17**

1. Quick-attach pins (engaged position)
2. Disengaged position
3. Engaged position

**⚠ WARNING**

**If you do not fully seat the quick-attach pins through the attachment mount plate, the attachment could fall off the machine, crushing you or bystanders.**

**Ensure that the quick-attach pins are fully seated in the attachment mount plate.**

## Connecting the Hydraulic Hoses

**⚠ WARNING**

**Hydraulic fluid escaping under pressure can penetrate skin and cause injury. Fluid injected into the skin must be surgically removed within a few hours by a doctor familiar with this form of injury; otherwise, gangrene may result.**

- **Ensure that all hydraulic-fluid hoses and lines are in good condition and all hydraulic connections and fittings are tight before applying pressure to the hydraulic system.**
- **Keep your body and hands away from pinhole leaks or nozzles that eject high-pressure hydraulic fluid.**
- **Use cardboard or paper to find hydraulic leaks; never use your hands.**

**⚠ CAUTION**

**Hydraulic couplers, hydraulic lines/valves, and hydraulic fluid may be hot. If you contact hot components, you may be burned.**

- **Wear gloves when operating the hydraulic couplers.**
- **Allow the machine to cool before touching hydraulic components.**
- **Do not touch hydraulic fluid spills.**

If the attachment requires hydraulics for operation, connect the hydraulic hoses as follows:

1. Shut off the engine and remove the key.
2. Move the auxiliary-hydraulics lever forward, backward, and back to the NEUTRAL position to relieve pressure at the hydraulic couplers.
3. Remove the protective covers from the hydraulic connectors on the machine.
4. Ensure that all foreign matter is cleaned from the hydraulic connectors.
5. Push the attachment male connector into the female connector on the machine.

   **Note:** When you connect the attachment male connector first, you relieve any pressure built up in the attachment.
6. Push the attachment female connector onto the male connector on the machine.
7. Confirm that the connection is secure by pulling on the hoses.

## Removing an Attachment

1. Park the machine on a level surface.
2. Lower the attachment to the ground.
3. Shut off the engine and remove the key.
4. Disengage the quick-attach pins by turning them to the outside.
5. If the attachment uses hydraulics, move the auxiliary-hydraulics lever forward, backward, and back to the NEUTRAL position to relieve pressure at the hydraulic couplers.
6. If the attachment uses hydraulics, slide the collars back on the hydraulic couplers and disconnect them.

   ***Important:*** **Connect the attachment hoses together to prevent hydraulic system contamination during storage.**
7. Install the protective covers onto the hydraulic couplers on the machine.
8. Start the engine, tilt the mount plate forward, and back the machine away from the attachment.

# *After Operation*

# After Operation Safety

## General Safety

- Shut off the engine, remove the key, wait for all movement to stop, and allow the machine to cool before adjusting, cleaning, storing, or servicing it.
- Clean debris from the attachments, drives, mufflers, and engine to help prevent fires. Clean up oil or fuel spills.
- Keep all parts in good working condition and all hardware tightened.
- Do not touch parts that may be hot from operation. Allow them to cool before attempting to maintain, adjust, or service the machine.
- Use care when loading or unloading the machine into a trailer or truck.

# Moving a Non-Functioning Machine

***Important:*** **Do not tow or pull the machine without first opening the tow valves, or you will damage the hydraulic system.**

1. Shut off the engine and remove the key.
2. Open the rear-access cover.
3. Using a wrench, turn the tow valves on the hydraulic pumps twice counter-clockwise (Figure 18).

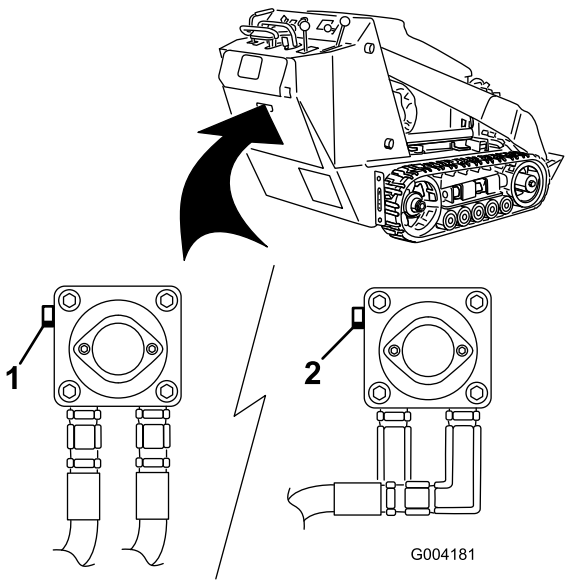


g004181

**Figure 18**

1. Left tow valve (right track) 2. Right tow valve (left track)

4. Tow the machine as required.
5. After repairing the machine, close the tow valves before operating it.

# Hauling the Machine

Use a heavy-duty trailer or truck to haul the machine. Use a full-width ramp. Ensure that the trailer or truck has all the necessary brakes, lighting, and marking as required by law. Please carefully read all the safety instructions. Knowing this information could help you or bystanders avoid injury. Refer to your local ordinances for trailer and tie-down requirements.

**⚠ WARNING**

**Driving on the street or roadway without turn signals, lights, reflective markings, or a slow-moving-vehicle emblem is dangerous and can lead to accidents causing personal injury.**

**Do not drive the machine on a public street or roadway.**

## Selecting a Trailer

**⚠ WARNING**

**Loading a machine onto a trailer or truck increases the possibility of tip-over and could cause serious injury or death (Figure 19).**

- **Use only full-width ramps.**
- **Ensure that the length of ramp is at least 4 times as long as the height of the trailer or truck bed to the ground. This ensures that ramp angle does not exceed 15 degrees on flat ground.**

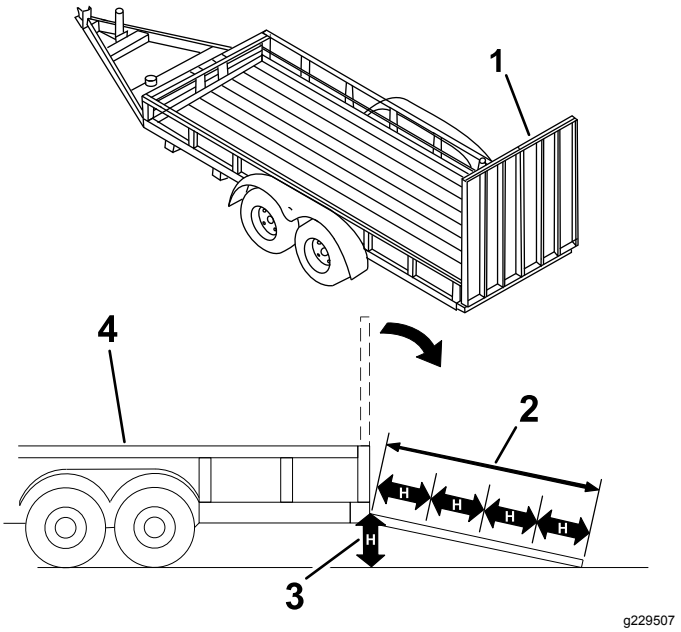


**Figure 19**

1. Full-width ramp(s) in stowed position
2. Ramp is at least 4 times as long as the height of the trailer or truck bed to the ground
3. H=height of the trailer or truck bed to the ground
4. Trailer

## Loading the Machine

**⚠ WARNING**

**Loading a machine onto a trailer or truck increases the possibility of tip-over and could cause serious injury or death.**

- **Use extreme caution when operating a machine on a ramp.**
- **Load and unload the machine with the heavy end up the ramp.**
- **Avoid sudden acceleration or deceleration while driving the machine on a ramp as this could cause a loss of control or a tip-over situation.**

1. If using a trailer, connect it to the towing vehicle and connect the safety chains.
2. If applicable, connect the trailer brakes.
3. Lower the ramp(s).
4. Lower the loader arms.
5. Load the machine onto the trailer with the heavy end up the ramp, carrying loads low (Figure 20).
   - If the machine has a **full** load-bearing attachment (e.g., bucket) or a non-load-bearing attachment (e.g., trencher), drive the machine forward up the ramp.
   - If the machine has an **empty** load-bearing attachment or no attachment, back the machine up the ramp.

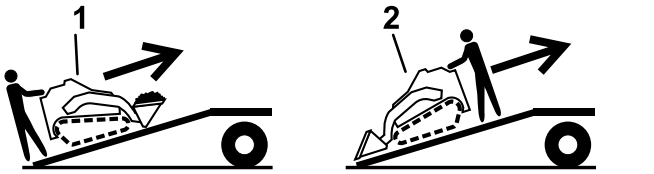


**Figure 20**

1. Machine with full attachment or non-load-bearing attachment—drive the machine forward up the ramp(s).
2. Machine with empty or no attachment—back the machine up the ramp(s).

6. Lower the loader arms all the way down.
7. Engage the parking brake (if equipped), shut off the engine, and remove the key.
8. Use the metal tie-down loops on the machine to securely fasten the machine to the trailer or truck with straps, chains, cable, or ropes (Figure 21). Refer to local regulations for tie-down requirements.

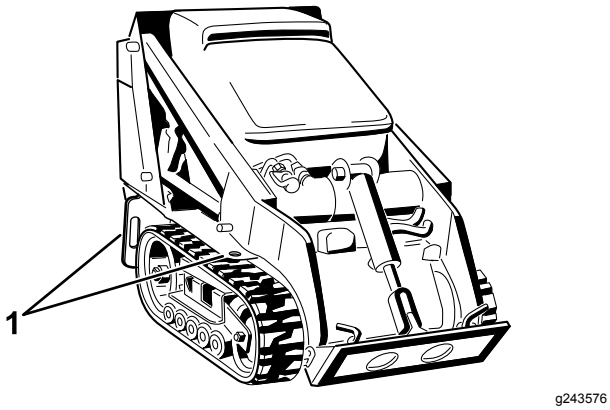


**Figure 21**

1. Tie-down loops

## Unloading the Machine

1. Lower the ramp(s).
2. Unload the machine from the trailer with the heavy end up the ramp, carrying loads low (Figure 22).
   - If the machine has a **full** load-bearing attachment (e.g., bucket) or a non-load-bearing attachment (e.g., trencher), back it down the ramp.
   - If the machine has an **empty** load-bearing attachment or no attachment, drive it forward down the ramp.

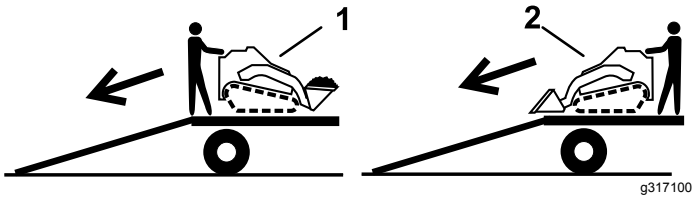


**Figure 22**

1. Machine with full attachment or non-load-bearing attachment—back the machine down the ramp(s).
2. Machine with empty or no attachment—drive the machine forward down the ramp(s).

# Lifting the Machine

You can lift the machine using the tie-down/lift loops as lift points; refer to Figure 21.

# Maintenance

**Note:** Determine the left and right sides of the machine from the normal operating position.

## Maintenance Safety

**⚠ CAUTION**

**If you leave the key in the switch, someone could accidently start the engine and seriously injure you or other bystanders.**

**Remove the key from the switch before you perform any maintenance.**

- Park the machine on a level surface, disengage the auxiliary hydraulics, lower the attachment, engage the parking brake (if equipped), shut off the engine, and remove the key. Wait for all movement to stop and allow the machine to cool before adjusting, cleaning, storing, or repairing it.
- Clean up oil or fuel spills.
- Do not allow untrained personnel to service the machine.
- Use jack stands to support the components when required.
- Carefully release pressure from components with stored energy; refer to Relieving Hydraulic Pressure (page 42).
- Disconnect the battery before making any repairs; refer to Removing the Battery (page 31).
- Keep your hands and feet away from the moving parts. If possible, do not make adjustments with the engine running.
- Keep all parts in good working condition and all hardware tightened. Replace all worn or damaged decals.
- Do not tamper with the safety devices.
- Use only Toro-approved attachments. Attachments can change the stability and the operating characteristics of the machine. You may void the warranty if you use the machine with unapproved attachments.
- Use only genuine Toro replacement parts.
- If any maintenance or repair requires the loader arms to be in the raised position, secure the arms in the raised position with the hydraulic-cylinder lock(s).

## Recommended Maintenance Schedule(s)

| Maintenance Service Interval | Maintenance Procedure |
|---|---|
| After the first 8 hours | • Replace the hydraulic filter. |
| After the first 50 hours | • Change the engine oil and filter.<br>• Check and adjust the track tension. |
| Before each use or daily | • Grease the machine. (Grease immediately after every washing.)<br>• Check the air-filter-service indicator.<br>• Check the engine-oil level.<br>• Drain water and other contaminants from the fuel filter/water separator.<br>• Clean the tracks.<br>• Check the tracks for excessive wear (If the tracks are worn, replace them).<br>• Clean the screen, oil cooler, and front of the radiator (more often in dirty or dusty conditions).<br>• Check the coolant level in the expansion tank.<br>• Check and clean the radiator screen<br>• Test the parking brake.<br>• Remove debris from the machine.<br>• Check for loose fasteners. |
| Every 25 hours | • Remove the air-cleaner cover, clean out debris, and check the air-filter-service indicator.<br>• Check the hydraulic-fluid level. |

| Maintenance Service Interval | Maintenance Procedure |
|---|---|
| Every 100 hours | • Change the engine oil. (Service more frequently if conditions are extremely dusty or sandy.)<br>• Check and adjust the track tension.<br>• Check the cooling system hoses.<br>• Check the hydraulic lines for leaks, loose fittings, kinked lines, loose mounting supports, wear, weather, and chemical deterioration.<br>• Check for dirt buildup in the chassis.<br>• Check the alternator/fan belt tension (refer to the engine owner's manual for instructions). |
| Every 200 hours | • Change the oil filter. (Service more frequently if conditions are extremely dusty or sandy.)<br>• Replace the hydraulic filter. |
| Every 250 hours | • Check and grease the road wheels. |
| Every 400 hours | • Check the fuel lines and connections for deterioration, damage, or loose connections.<br>• Replace the fuel filter canister and in-line filter.<br>• Change the hydraulic fluid. |
| Every 500 hours | • Replace the alternator/fan belt (refer to the engine owner's manual for instructions). |
| Every 1,500 hours or 2 years, whichever comes first | • Replace all moving hydraulic hoses. |
| Yearly | • Change the engine coolant.<br>• Check the condition of the hydraulic pump belt. |
| Yearly or before storage | • Check and adjust the track tension.<br>• Touch up chipped paint. |
| Every 2 years | • Drain and clean the fuel tank(s)—Authorized Service Dealer only. |

***Important:*** **Refer to your engine owner's manual for additional maintenance procedures.**

# *Pre-Maintenance Procedures*

## Using the Cylinder Lock

**⚠ WARNING**

**The loader arms may lower when in the raised position, crushing anyone under them.**

**Install the cylinder lock(s) before performing maintenance that requires raised loader arms.**

### Installing the Cylinder Lock

1. Remove the attachment.
2. Raise the loader arms to the fully raised position.
3. Shut off the engine and remove the key.
4. Remove the lynch pin securing the cylinder lock to the loader arm (Figure 23).

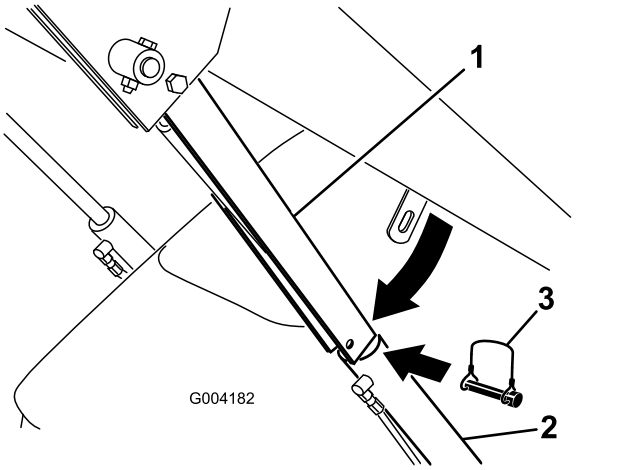


g004182

**Figure 23**

1. Cylinder lock
2. Lift cylinder
3. Lynch pin

5. Lower the cylinder lock over the cylinder rod and secure it with the lynch pin (Figure 23).
6. **Slowly** lower the loader arms until the cylinder lock contacts the cylinder body and rod end.

## Removing and Storing the Cylinder Lock

***Important:*** **Remove the cylinder lock from the rod and fully secure it in the storage position before operating the machine.**

1. Start the engine.
2. Raise the loader arms to the fully raised position.
3. Shut off the engine and remove the key.
4. Remove the lynch pin securing the cylinder lock.
5. Rotate the cylinder lock up to the loader arm and secure it with the lynch pin.
6. Lower the loader arms.

# Accessing Internal Components

**⚠ WARNING**

**Opening or removing covers, hoods, and screens while the engine is running could allow you to contact moving parts, seriously injuring you.**

**Before opening any of the covers, hoods, and screens, shut off the engine, remove the key from the key switch, and allow the engine to cool.**

## Opening the Hood

1. Loosen the hood-locking screw (Figure 24)

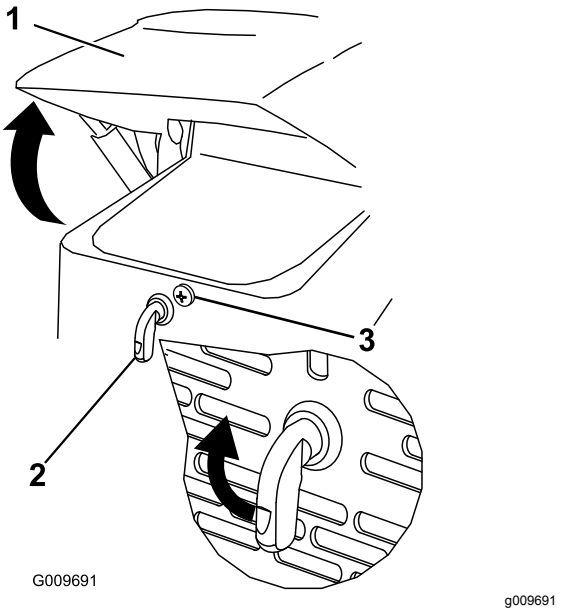


**Figure 24**

1. Hood
2. Hood-latch lever
3. Hood-locking screw

2. Turn the hood latch clockwise (Figure 24).
3. Swing the hood up (Figure 24).

## Closing the Hood

1. Lift up on the tab securing the prop rod (Figure 25)

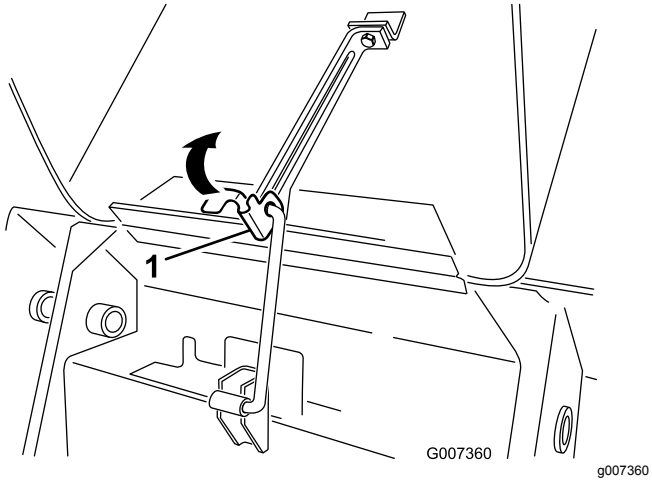


g007360

**Figure 25**

1. Prop-rod tab

2. Lower the hood and secure it by pushing down on the front of the hood until it locks in place.
3. Tighten the hood-locking screw to secure the latch (Figure 24).

## Opening the Rear-Access Cover

1. Unscrew the 2 hand knobs securing the rear-access cover to the machine (Figure 26).

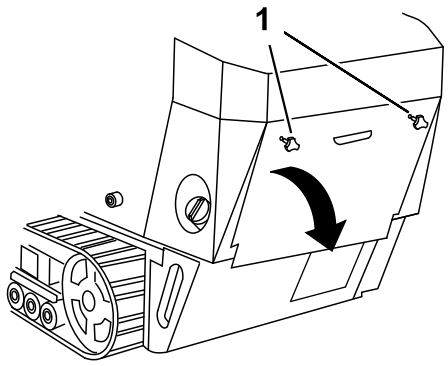


g244210

**Figure 26**

1. Hand knobs

2. Tilt the rear-access cover down and remove to access the internal components (Figure 26).

## Closing the Rear-Access Cover

1. Move the rear-access cover in place over the back of the machine; ensure that the tabs line up in the slots.
2. Push the access cover forward, lining up the hand-knob screws with the threaded holes in the machine.
3. Screw the hand knobs tight to secure the rear-access cover in place.

## Removing the Side Screens

1. Open the hood.
2. Slide the side screens (Figure 27) up and out of the slots in the front screen and frame.

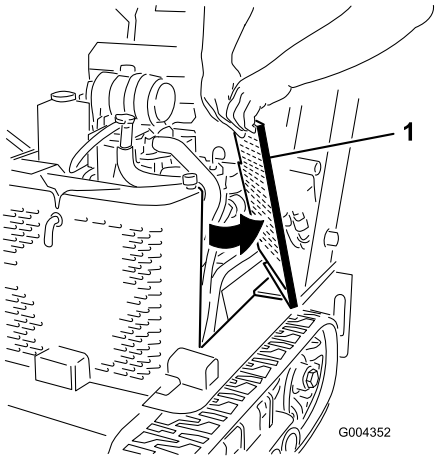


g004352

**Figure 27**

1. Side screen

## Installing the Side Screens

Slide the side screens into place in the slots in the front screen and frame.

# Lubrication

## Greasing the Machine

**Service Interval:** Before each use or daily (Grease immediately after every washing.)

**Grease Type:** General-purpose grease

1. Park the machine on a level surface, engage the parking brake (if equipped), and lower the loader arms.
2. Shut off the engine and remove the key.
3. Clean the grease fittings with a rag.
4. Connect a grease gun to each fitting (Figure 28 and Figure 29).

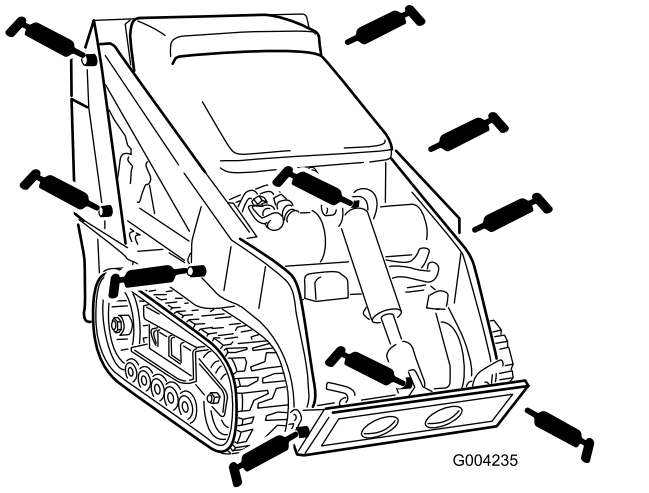


g004235

**Figure 28**

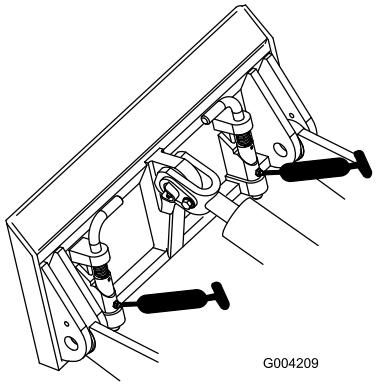


g004209

**Figure 29**

5. Pump grease into the fittings until grease begins to ooze out of the bearings (approximately 3 pumps).
6. Wipe up any excess grease.

# Engine Maintenance

## Engine Safety

- Shut off the engine before checking the oil or adding oil to the crankcase.
- Do not change the engine governor setting or overspeed the engine.
- Keep your hands, feet, face, clothing, and other body parts away from the muffler and other hot surfaces.

## Servicing the Air Cleaner

**Service Interval:** Before each use or daily—Check the air-filter-service indicator.

Every 25 hours—Remove the air-cleaner cover, clean out debris, and check the air-filter-service indicator.

### Servicing the Air-Cleaner Cover and Body

***Important:*** **Replace the air-cleaner filter only when the service indicator shows red (Figure 30). Changing the air filter before it is necessary only increases the chance of dirt entering the engine when you remove the filter.**

1. Park the machine on a level surface, engage the parking brake (if equipped), and lower the loader arms.
2. Shut off the engine and remove the key.
3. Open the hood and secure the prop rod (if applicable).
4. Check the air-cleaner body for damage that could cause an air leak. Check the whole intake system for leaks, damage, or loose hose clamps.

   Replace or repair any damaged components.
5. Release the latches on the air cleaner and pull the air-cleaner cover off the air-cleaner body (Figure 30).

   ***Important:*** **Do not remove the air filter.**

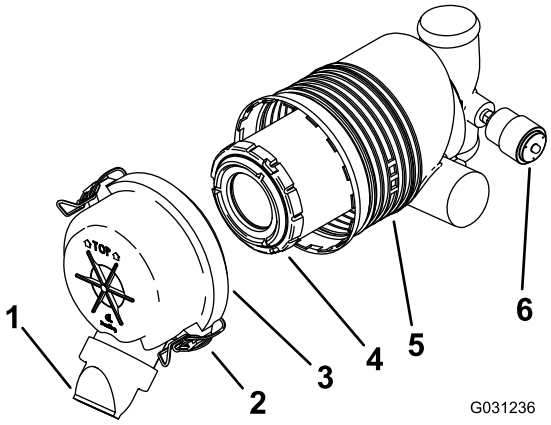


**Figure 30**

1. Dust cap
2. Latch
3. Air-cleaner cover
4. Primary filter
5. Air-filter body
6. Service indicator

6. Squeeze the dust cap sides to open it and knock the dust out.
7. Clean the inside of the air-cleaner cover with compressed air that is under 205 kPa (30 psi).

   ***Important:*** **Do not use compressed air on the air-cleaner body.**
8. Check the service indicator.
   - If the service indicator is clear, install the air-cleaner cover with the dust cap oriented downward and secure the latches (Figure 30).
   - If the service indicator is red, replace the air filter as described in Replacing the Filter (page 27).

## Replacing the Filter

***Important:*** **To prevent engine damage, always operate the engine with the air filter and cover installed.**

1. Gently slide the filter out of the air-cleaner body (Figure 30).

   **Note:** Avoid knocking the filter into the side of the body.

   ***Important:*** **Do not attempt to clean the filter.**
2. Inspect the new filter for tears, an oily film, or damage to the rubber seal. Look into the filter while shining a bright light on the outside of the filter; holes in the filter appear as bright spots.

   If the filter is damaged, do not use it.
3. Carefully install the filter (Figure 30).

   **Note:** Ensure that the filter is fully seated by pushing on the outer rim of the filter while installing it.

   ***Important:*** **Do not press on the soft inside area of the filter.**
4. Install the air-cleaner cover with the dust cap oriented downward and secure the latches (Figure 30).
5. Close the hood.

# Servicing the Engine Oil

**Service Interval:** Before each use or daily—Check the engine-oil level.

After the first 50 hours—Change the engine oil and filter.

Every 100 hours—Change the engine oil. (Service more frequently if conditions are extremely dusty or sandy.)

Every 200 hours—Change the oil filter. (Service more frequently if conditions are extremely dusty or sandy.)

## Engine-Oil Specifications

Oil Type: Detergent diesel engine oil (API service CH-4 or higher)

Crankcase Capacity: with filter, 3.7 L (1.0 US gallon)

Viscosity: See table below

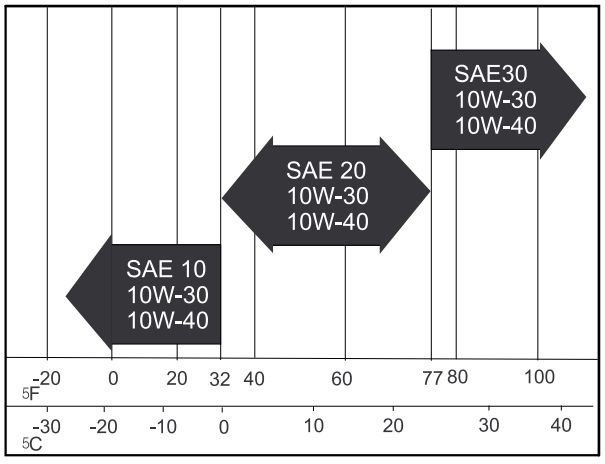


**Figure 31**

## Checking the Engine-Oil Level

1. Park the machine on a level surface, engage the parking brake, and lower the loader arms.
2. Shut off the engine, remove the key, and allow the engine to cool.
3. Open the hood.
4. Clean the area around the oil dipstick (Figure 32).

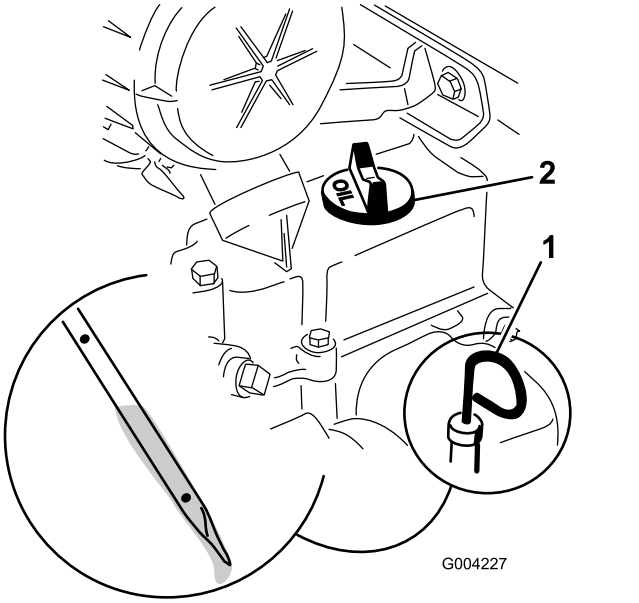


**Figure 32**

1. Oil dipstick
2. Oil-fill cap

5. Pull out the dipstick and wipe the metal end clean (Figure 32).
6. Slide the dipstick fully into the dipstick tube (Figure 32).
7. Pull the dipstick out and look at the metal end.
8. If the oil level is low (below the bottom hole), clean around the oil-fill cap and remove the cap (Figure 32).
9. Slowly pour only enough oil into the valve cover to raise the level to the upper hole on the dipstick.

   ***Important:*** **Do not overfill the crankcase with oil to prevent damaging the engine.**
10. Replace the fill cap and dipstick.
11. Close the hood.

## Changing the Engine Oil

1. Start the engine and let it run for 5 minutes.

   **Note:** This warms the oil so that it drains better.
2. Park the machine so that the drain side is slightly lower than the opposite side to ensure that the oil drains completely.
3. Lower the loader arms, engage the parking brake, shut off the engine, and remove the key.
4. Remove the drain plug (Figure 33).

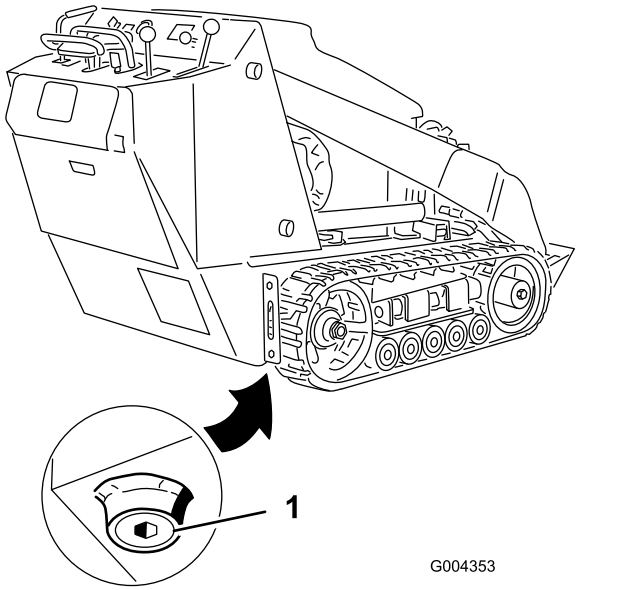


**Figure 33**

1. Oil drain plug

5. When the oil has drained completely, replace the plug.

   **Note:** Dispose of the used oil at a certified recycling center.
6. Remove the fill cap (Figure 32) and slowly pour approximately 80% of the specified amount of oil in through the valve cover.
7. Check the oil level.
8. Slowly add additional oil to bring the level to the upper hole on the dipstick.
9. Replace the fill cap.

## Changing the Oil Filter

1. Drain the oil from the engine; refer to Changing the Engine Oil (page 28).
2. When the oil has drained completely, replace the plug.

   **Note:** Dispose of the used oil at a certified recycling center.
3. Place a shallow pan or rag under the filter to catch oil.
4. Remove the old filter (Figure 34) and wipe the surface of the filter adapter gasket.

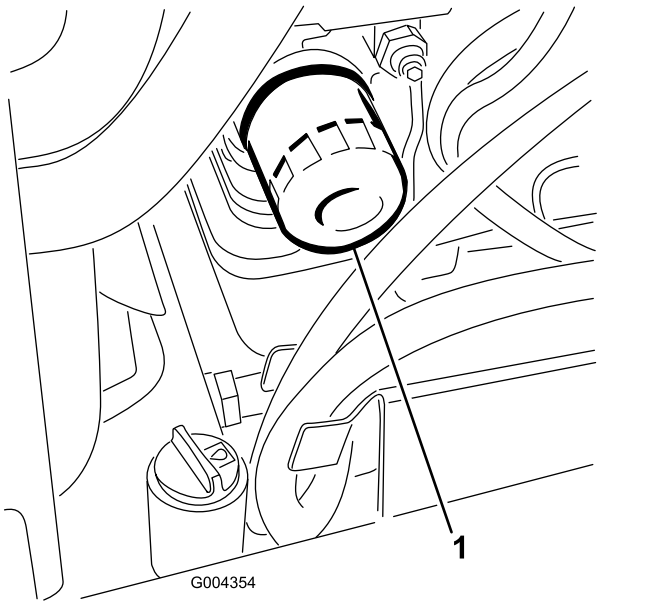


**Figure 34**

1. Oil filter

5. Pour new oil of the proper type through the center hole of the filter. Stop pouring when the oil reaches the bottom of the threads.
6. Allow 1 to 2 minutes for the oil to be absorbed by filter material, then pour off the excess oil.
7. Apply a thin coat of new oil to the rubber gasket on the replacement filter.
8. Install the replacement oil filter to the filter adapter. Turn the oil filter clockwise until the rubber gasket contacts the filter adapter, then tighten the filter an additional 1/2 turn.
9. Remove the fill cap (Figure 32) and slowly pour approximately 80% of the specified amount of oil in through the valve cover.
10. Check the oil level.
11. Slowly add additional oil to bring the level to the upper hole on the dipstick.
12. Replace the fill cap.

# *Fuel System Maintenance*

**⚠ DANGER**

**In certain conditions, fuel is extremely flammable and highly explosive. A fire or explosion from fuel can burn you and others and can damage property.**

**Refer to Fuel Safety (page 14) for a complete list of fuel related precautions.**

## Checking the Fuel Lines and Connections

**Service Interval:** Every 400 hours/Yearly (whichever comes first)

Inspect the fuel lines and connections for deterioration, damage, or loose connections. Tighten any loose connections and contact your Authorized Service Dealer for assistance in fixing damaged fuel lines.

## Draining the Fuel Filter/Water Separator

**Service Interval:** Before each use or daily

1. Park the machine on a level surface, engage the parking brake, and lower the loader arms.
2. Shut off the engine and remove the key.
3. Locate the fuel filter on the right side of the engine (Figure 35) and place a clean container under it.

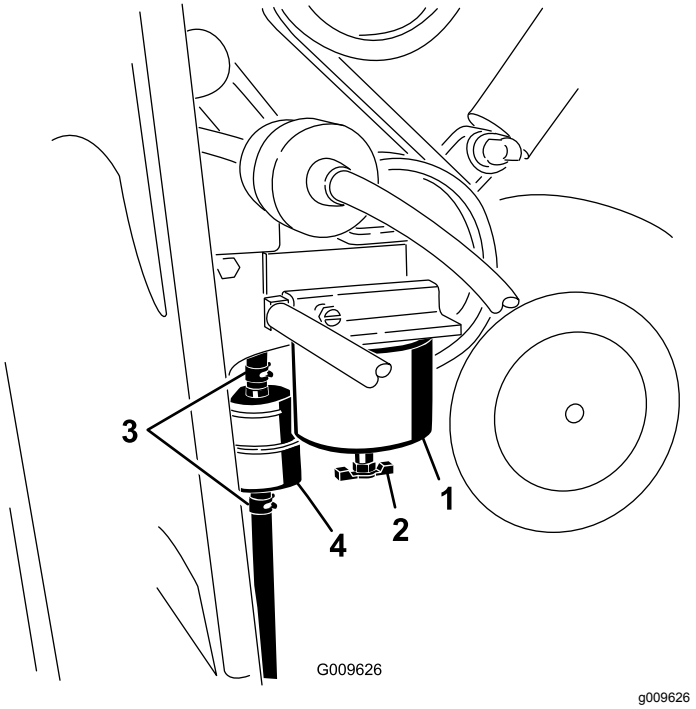


**Figure 35**

1. Fuel-filter canister/water separator
2. Drain valve
3. Hose clamps
4. In-line filter

4. Loosen the drain valve on the bottom of the filter canister and allow the water to drain.
5. When finished, tighten the drain valve.

# Replacing the Fuel Filter Canister and In-Line Filter

**Service Interval:** Every 400 hours

1. Park the machine on a level surface, engage the parking brake, and lower the loader arms.
2. Shut off the engine and remove the key.
3. Open the rear-access cover; refer to Opening the Rear-Access Cover (page 25).
4. Locate the fuel filters on the right side of the engine (Figure 35) and place a clean container under it.
5. Clean the area where the filter canister mounts (Figure 35).
6. Remove the filter canister and clean the mounting surface (Figure 35).
7. Lubricate the gasket on the new filter canister with clean oil.
8. Fill the canister with fuel.
9. Install the filter canister by hand until the gasket contacts the mounting surface, then rotate it an additional 1/2 turn (Figure 35).
10. Locate the in-line filter to the left of the fuel filter canister (Figure 35) and note the direction of flow arrow on the side of the in-line filter.
11. Open the clamps on each end of the in-line filter and slide the hoses off it (Figure 35). Discard the filter.
12. Slide the hoses over the end of a new filter (Figure 35), ensuring that the arrow on the filter is pointing toward the engine or electric fuel pump.
13. Secure the hoses to the filter with the hose clamps.
14. Close the rear-access cover and secure with the fastener(s).

# Bleeding the Fuel System

You must bleed the fuel system before starting the engine if any of the following situations have occurred:

- Initial startup of a new machine
- The engine has ceased running due to a lack of fuel.
- Maintenance has been performed on fuel system components (e.g., filter replaced).

1. Park the machine on a level surface, lower the loader arms, and shut off the engine.
2. Ensure that the fuel tank is at least half full.
3. Open the hood.
4. Open the air-bleed screw on the fuel-injection pump (Figure 36).

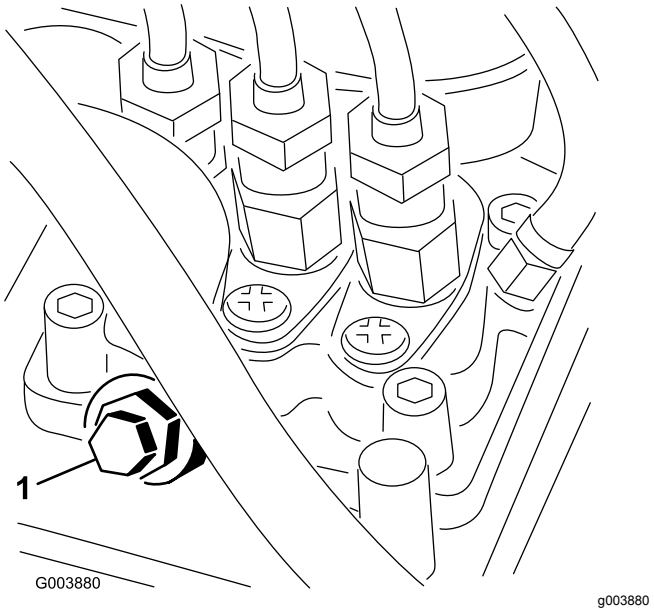


**Figure 36**

1. Air-bleed screw

5. Turn the key in the key switch to the ON position. The electric fuel pump begins operation, thereby forcing air out around the air-bleed screw. Leave the key in the ON position until a solid stream of fuel flows out around the screw.
6. Tighten the screw and turn the key to the OFF position.

**Note:** The engine should start after the above bleeding procedures are followed. However, if engine does not start, air may be trapped between injection pump and injectors; contact your Authorized Service Dealer.

## Draining the Fuel Tank(s)

**Service Interval:** Every 2 years

Have an Authorized Service Dealer drain and clean the fuel tank(s).

# *Electrical System Maintenance*

## Electrical System Safety

- Disconnect the battery before repairing the machine. Disconnect the negative terminal first and the positive last. Connect the positive terminal first and the negative last.
- Charge the battery in an open, well-ventilated area, away from sparks and flames. Unplug the charger before connecting or disconnecting the battery. Wear protective clothing and use insulated tools.
- Battery acid is poisonous and can cause burns. Avoid contact with skin, eyes, and clothing. Protect your face, eyes, and clothing when working with a battery.
- Battery gases can explode. Keep cigarettes, sparks, and flames away from the battery.

## Servicing the Battery

Always keep the battery clean and fully charged. Use a paper towel to clean the battery case. If the battery terminals are corroded, clean them with a solution of 4 parts water and 1 part baking soda. Apply a light coating of grease to the battery terminals to reduce corrosion.

**Specifications:** 12 V, 585 A (cold cranking)

### Removing the Battery

**⚠ WARNING**

**Battery terminals or metal tools could short against metal machine components, causing sparks. Sparks can cause the battery gasses to explode, resulting in personal injury.**

- **When removing or installing the battery, do not allow the battery terminals to touch any metal parts of the machine.**
- **Do not allow metal tools to short between the battery terminals and metal parts of the machine.**

1. Park the machine on a level surface, engage the parking brake (if equipped), and lower the loader arms.
2. Shut off the engine and remove the key.
3. Open the rear-access cover; refer to Opening the Rear-Access Cover (page 25).
4. Remove the battery-access panel

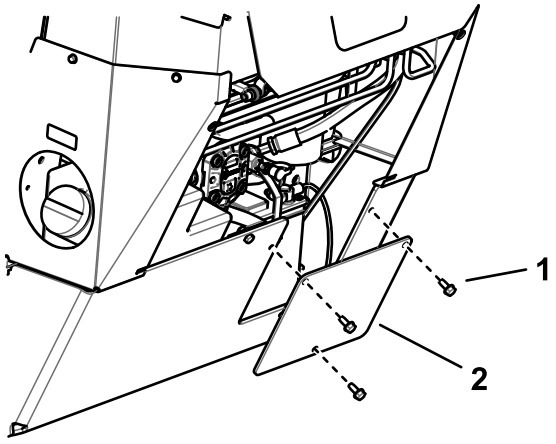


**Figure 37**

1. Bolt (3)
2. Battery-access panel

5. Remove the bolt, washer, and bar securing the battery (Figure 38).

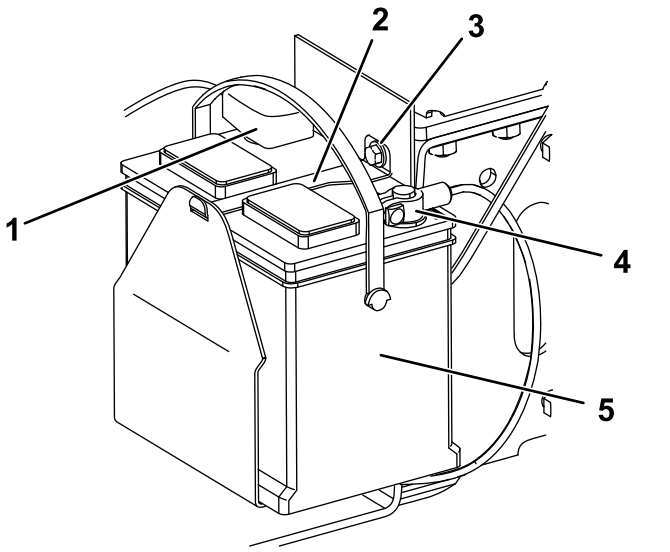


**Figure 38**

1. Positive cable
2. Bar
3. Bolt and washer
4. Negative cable
5. Battery

6. Disconnect the negative (black) ground cable from the battery post (Figure 38). Retain the fasteners.
7. Slide the rubber cover off the positive (red) cable.
8. Disconnect the positive (red) cable from the battery post (Figure 38). Retain the fasteners.
9. Lift the battery out of the chassis.

# Charging the Battery

***Important:*** **Always keep the battery fully charged (1.265 specific gravity). This is especially important to prevent battery damage when the temperature is below 0°C (32°F).**

1. Remove the battery from the machine; refer to Removing the Battery (page 31).
2. Charge the battery for 10 to 15 minutes at 25 to 30 A or 30 minutes at 4 to 6 A (Figure 39). Do not overcharge the battery.

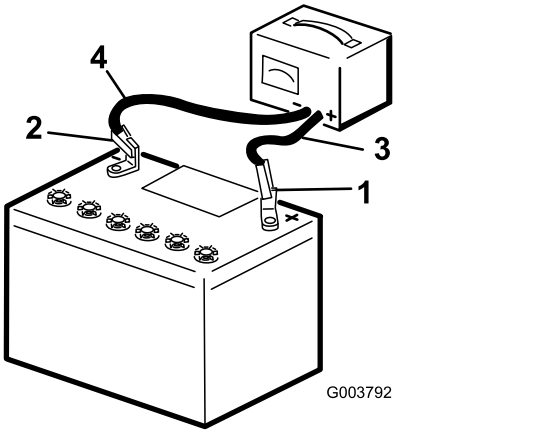


**Figure 39**

1. Positive battery post
2. Negative battery post
3. Red (+) charger lead
4. Black (-) charger lead

3. When the battery is fully charged, unplug the charger from the electrical outlet, then disconnect the charger leads from the battery posts (Figure 39).

## Cleaning the Battery

**Note:** Keep the terminals and the entire battery case clean, to help extend battery life.

1. Park the machine on a level surface, engage the parking brake (if equipped), and lower the loader arms.
2. Shut off the engine and remove the key.
3. Remove the battery from the machine; Removing the Battery (page 31).
4. Wash the entire case with a solution of baking soda and water.
5. Rinse the battery with clear water.
6. Coat the battery posts and cable connectors with Grafo 112X (skin-over) grease (Toro Part No. 505-47) or petroleum jelly to prevent corrosion.
7. Install the battery; refer to Installing the Battery (page 33).

## Installing the Battery

1. Using the fasteners previously removed, install the positive (red) battery cable to the positive (+) battery terminal (Figure 38).
2. Slide the red terminal boot onto the positive battery post.
3. Using the fasteners previously removed, install the negative (black) battery cable to the negative (-) battery terminal (Figure 38).
4. Secure the battery using the bar, bolt, and washer (Figure 38).

   ***Important:*** **Ensure that the battery cables do not contact any sharp edges or each other.**
5. Install the battery-access panel (Figure 37).
6. Close the rear-access cover; refer to Closing the Rear-Access Cover (page 25).

## Servicing a Replacement Battery

The original battery is maintenance-free and does not require service. For servicing a replacement battery, refer to the battery manufacturer's instructions.

# Servicing the Fuses

The electrical system is protected by fuses. It requires no maintenance; however, if a fuse blows, check the component/circuit for a malfunction or a short. Figure 40 illustrates the fuse block and identifies the fuse positions.

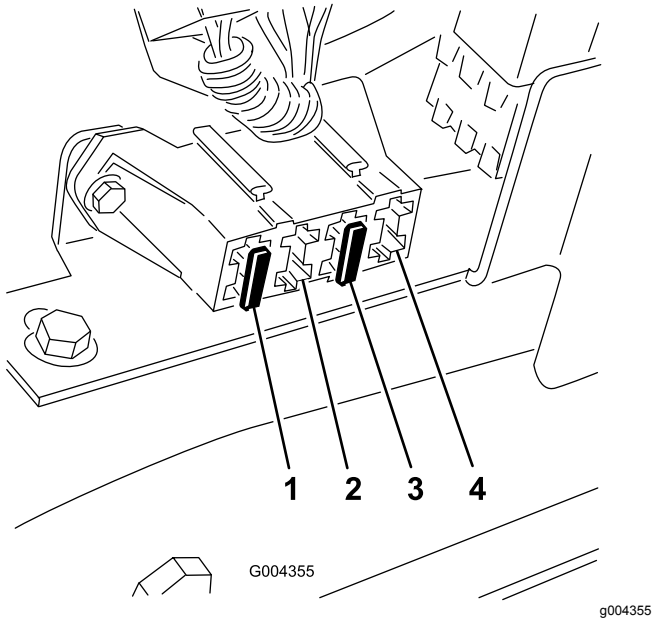


**Figure 40**

1. Fuse (30 A)
2. Empty
3. Fuse (10 A)
4. Open position for optional accessories

**Note:** If the machine does not start, either the main circuit or control panel/relay fuse could be blown.

To access the fuses, you must remove the fuse panel, as follows:

1. Park the machine on a level surface, engage the parking brake (if equipped), and lower the loader arms.
2. Shut off the engine and remove the key.
3. Open the hood.
4. Pull the hairpin cotter from the bottom end of the hood prop-rod and slide the prop rod out of the retaining brackets and the prop-rod tab (Figure 41).

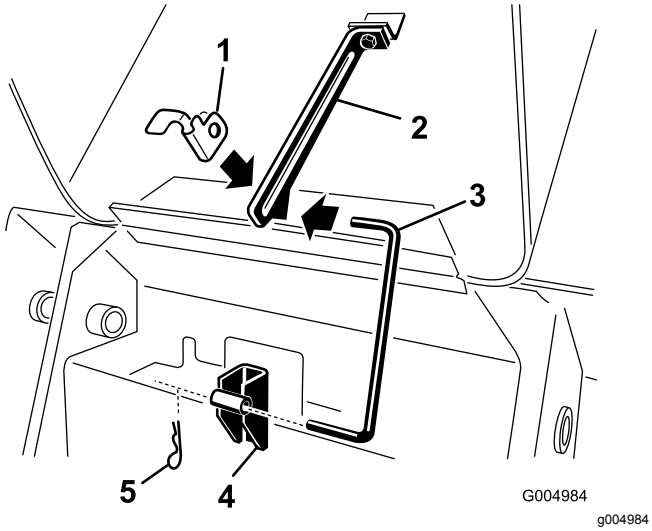


**Figure 41**

1. Prop-rod tab
2. Retaining bracket—top
3. Prop-rod
4. Retaining bracket—bottom
5. Hairpin cotter

5. Remove the 4 screws securing the fuse panel and then pull the panel out and up to remove it (Figure 42).

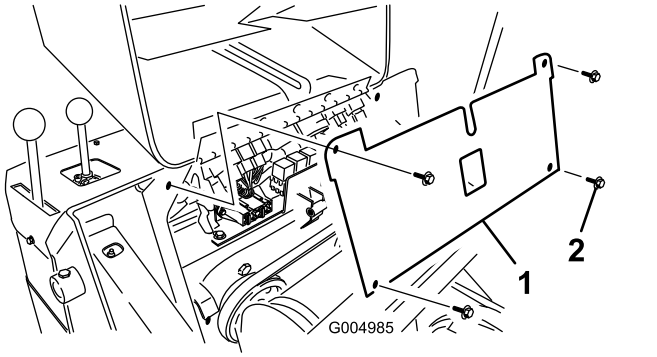


**Figure 42**

1. Fuse panel
2. Screw

6. Check the fuses.
7. Install the fuse panel using the 4 screws removed previously.
8. Install the prop-rod into the retaining brackets and prop-rod tab and secure it with the hairpin cotter (Figure 41).
9. Close the hood.

# *Drive System Maintenance*

## Servicing the Tracks

**Service Interval:** After the first 50 hours—Check and adjust the track tension.

Before each use or daily—Clean the tracks.

Before each use or daily—Check the tracks for excessive wear (If the tracks are worn, replace them).

Every 100 hours—Check and adjust the track tension.

Every 250 hours/Yearly (whichever comes first)—Check and grease the road wheels.

## Cleaning the Tracks

1. Park the machine on a level surface and engage the parking brake.
2. With the bucket installed and pointing down, lower it into the ground so that the front of the traction unit lifts off the ground a few centimeters (inches).
3. Shut off the engine and remove the key.
4. Using a water hose or pressure washer, remove dirt from each track system.

***Important:*** **Ensure that you use high-pressure water to wash only the track area. Do not use a high-pressure washer to clean the rest of the machine. Do not use high pressure water between the drive sprocket and the machine or you may damage the motor seals. High-pressure washing can damage the electrical system and hydraulic valves or deplete grease.**

***Important:*** **Ensure that you fully clean the road wheels, the tension wheel, and the drive sprocket (Figure 43). The road wheels should rotate freely when clean.**

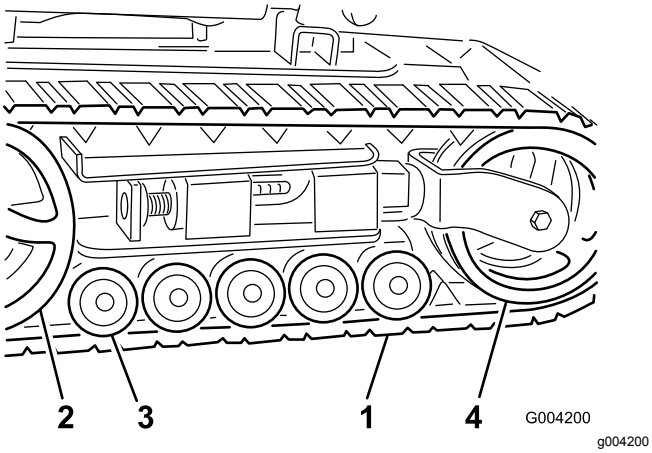


**Figure 43**

1. Track
2. Drive sprocket
3. Road wheels
4. Tension wheel

## Adjusting the Track Tension

There should be 7 cm (2-3/4 inches) between the tension nut and the back of the tension tube (Figure 44). If not, adjust the track tension using the following procedure:

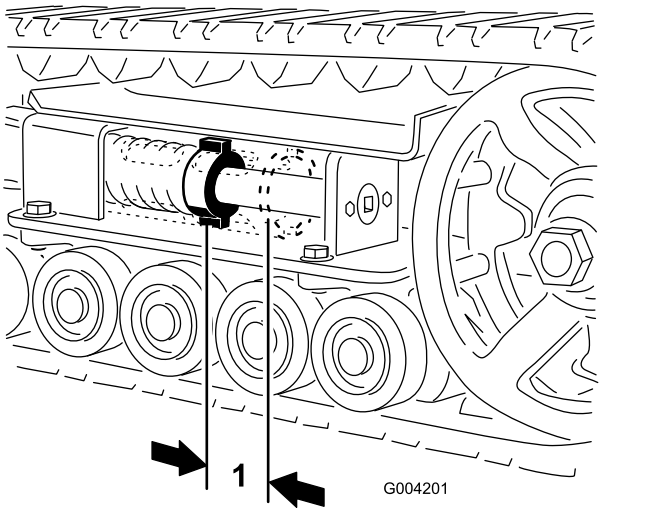


**Figure 44**

1. 7 cm (2-3/4 inches)

1. Park the machine on a level surface, engage the parking brake, and lower the loader arms.
2. Shut off the engine and remove the key.
3. Lift/support the side of the unit to be worked on so that the track is off the ground.
4. Remove the locking bolt and nut (Figure 45).

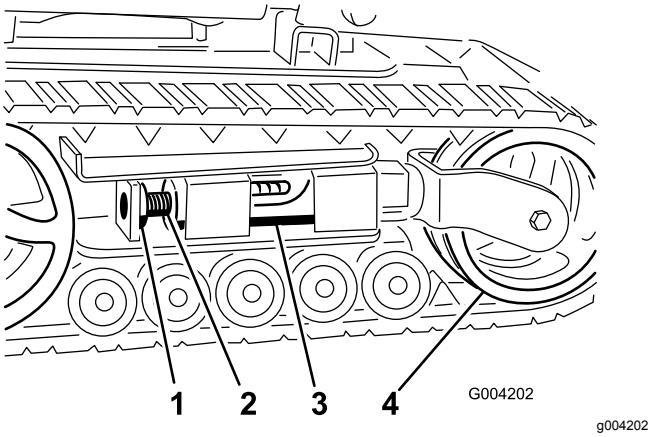


**Figure 45**

1. Locking bolt
2. Tensioning screw
3. Tension tube
4. Tension wheel

5. Using a 1/2-inch drive ratchet, turn the tensioning screw counterclockwise until the distance between the tension nut and the back of the tension tube (Figure 44) is 7 cm (2-3/4 inches).
6. Align the closest notch in the tension screw to the locking bolt hole and secure the screw with the locking bolt and nut (Figure 45).
7. Lower the traction unit to the ground.

## Replacing the Tracks

### Replacing Narrow-Width Tracks

When the tracks are badly worn, replace them.

**Note:** You have narrow-width tracks if the front tension wheels are mounted inside a fork on the end of the tension tube (Figure 46).

1. Park the machine on a level surface, engage the parking brake, and lower the loader arms.
2. Shut off the engine and remove the key.
3. Lift/support the side of the unit to be worked on so that the track is 8 to 10 cm (3 to 4 inches) off the ground.
4. Remove the locking bolt and nut (Figure 45).
5. Using a 1/2-inch drive ratchet, release the drive tension by turning the tensioning screw clockwise (Figure 45 and Figure 46).

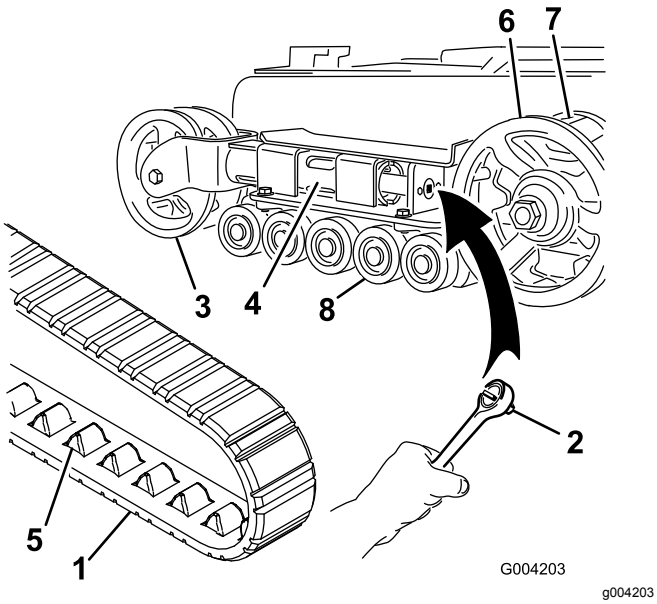


**Figure 46**

1. Track
2. Socket wrench (1/2 inch)
3. Tension wheel
4. Tension tube
5. Track lug
6. Drive sprocket
7. Sprocket cog
8. Road wheels

6. Push the tension wheel toward the rear of the unit to move the tension tube against the frame (Figure 46).

   If it does not touch the frame, continue turning the tensioning screw until it does.
7. Begin removing the track at the top of the tension wheel, peeling it off the wheel while rotating the track forward.
8. When the track is off the tension wheel, remove it from the drive sprocket and road wheels (Figure 46).
9. Beginning at the drive sprocket, coil the new track around the sprocket, ensuring that the lugs on the track fit between the cogs on the sprocket (Figure 46).
10. Push the track under and between the road wheels (Figure 46).
11. Starting at the bottom of the tension wheel, install the track around the wheel by rotating the track rearward while pushing the lugs into the wheel.
12. Turn the tensioning screw counterclockwise until the distance between the tension nut and the back of the tension tube (Figure 44) is 7 cm (2-3/4 inches).
13. Align the closest notch in the tension screw to the locking bolt hole and secure the screw with the locking bolt and nut.
14. Lower the traction unit to the ground.
15. Repeat steps 3 through 14 to replace the other track.

## Replacing Wide-Width Tracks

When the tracks are badly worn, replace them.

**Note:** You have wide-width tracks if the front tension wheels are mounted on the sides of the end of the tension tube (Figure 47).

1. Park the machine on a level surface, engage the parking brake, and lower the loader arms.
2. Shut off the engine and remove the key.
3. Lift/support the side of the unit to be worked on so that the track is 8 to 10 cm (3 to 4 inches) off the ground.
4. Remove the locking bolt and nut (Figure 45).
5. Using a 1/2-inch drive ratchet, release the drive tension by turning the tensioning screw clockwise (Figure 45 and Figure 47).

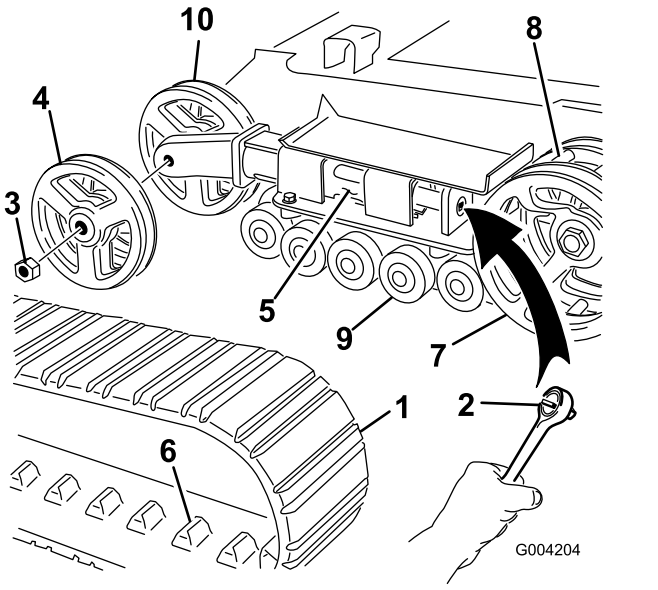


**Figure 47**

1. Track
2. Socket wrench (1/2 inch)
3. Tension wheel nut
4. Outer tension wheel
5. Tension tube
6. Track lug
7. Drive sprocket
8. Sprocket cog
9. Road wheels
10. Inner tension wheel

6. Push the tension wheel toward the rear of the unit to move the tension tube against the frame (Figure 47).

   If it does not touch the frame, continue turning the tensioning screw until it does.
7. Remove the nut securing the outer tension wheel and remove the wheel (Figure 47).
8. Remove the track (Figure 47).

9. Remove the nut securing the inner tension wheel and remove the wheel (Figure 47).
10. Pull the 4 large washers out of the 2 wheels, 1 on each side of each wheel.
11. Clean the old grease and dirt out of the area between where the washers were installed and the bearings inside the wheels, then fill this area on each side of each wheel with grease.
12. Install the large washers on the wheels over the grease.
13. Install the inner tension wheel and secure it with the nut removed previously (Figure 47).
14. Torque the nut to 407 N·m (300 ft-lb).
15. Install the new track, ensuring that the lugs in the track fit between the cogs in the middle of the drive sprocket (Figure 47).
16. Install the outer tension wheel and secure it with the nut removed previously (Figure 47).
17. Torque the nut to 407 N·m (300 ft-lb).
18. Turn the tensioning screw counterclockwise until the distance between the tension nut and the back of the tension tube (Figure 44) is 7 cm (2-3/4 inches).
19. Align the closest notch in the tension screw to the locking bolt hole and secure the screw with the locking bolt and nut.
20. Lower the traction unit to the ground.
21. Repeat steps 3 through 20 to replace the other track.

## Maintaining the Road Wheels

1. Remove the tracks; refer to Replacing the Tracks (page 35).
2. Remove the 4 bolts securing each lower track guide which contains the road wheels, and remove them (Figure 48).

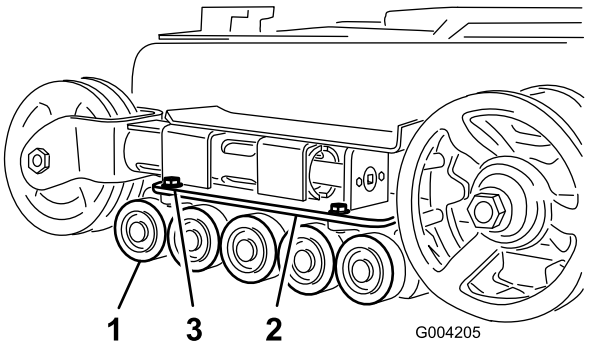


**Figure 48**

1. Road wheels
2. Lower track guide
3. Track guide bolts (only 2 shown)

3. Remove the snap ring and cap from a road wheel (Figure 49).

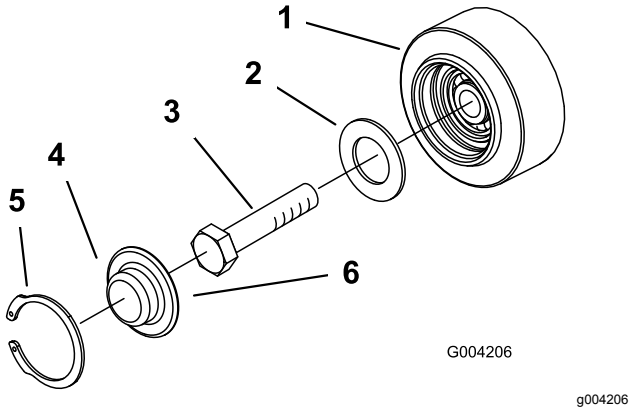


**Figure 49**

1. Road wheel
2. Gasket
3. Bolt
4. Road wheel cap
5. Snap ring
6. Add grease under the cap

4. Check the grease under the cap and around the gasket (Figure 49). If it is dirty, gritty, or depleted, clean out all of the grease, replace the gasket, and add new grease.
5. Ensure that the road wheel turns smoothly on the bearing. If it is frozen, replace the road wheel as described in the *Road Wheel Kit Installation Instructions* or contact your Authorized Service Dealer for repair.
6. Place the greased road wheel cap over the bolt head (Figure 46).
7. Secure the road wheel cap with the snap ring (Figure 46).
8. Repeat steps 3 through 7 for the other road wheels.
9. Install each track guide to the traction-unit frame using the fasteners you removed previously. Torque the bolts to 91 to 112 N·m (67 to 83 ft-lb).
10. Install the tracks; refer to Replacing the Tracks (page 35).

# Cooling System Maintenance

## Cooling System Safety

- Swallowing engine coolant can cause poisoning; keep out of reach from children and pets.
- Discharge of hot, pressurized coolant or touching a hot radiator and surrounding parts can cause severe burns.
  - Always allow the engine to cool at least 15 minutes before removing the radiator cap.
  - Use a rag when opening the radiator cap, and open the cap slowly to allow steam to escape.

## Servicing the Cooling System

**Service Interval:** Before each use or daily—Clean the screen, oil cooler, and front of the radiator (more often in dirty or dusty conditions).

Before each use or daily—Check the coolant level in the expansion tank.

Every 100 hours—Check the cooling system hoses.

**⚠ DANGER**

**The rotating shaft and fan can cause personal injury.**

- **Do not operate the machine without the covers in place.**
- **Keep your fingers, hands, and clothing clear of the rotating fan and drive shaft.**
- **Park the machine on a level surface, lower the loader arms, engage the parking brake, shut off the engine, and remove the key from the key switch before performing maintenance.**

### Cleaning the Radiator Screen

**Service Interval:** Before each use or daily

Remove any buildup of grass, dirt or other debris from the radiator screen with compressed air.

### Checking, Adding, and Bleeding the Engine Coolant

The cooling system is filled with a 50/50 solution of water and permanent ethylene-glycol antifreeze.

1. Park the machine on a level surface, lower the loader arms, engage the parking brake, and shut off the engine.
2. Remove the key from the key switch and allow the engine to cool.
3. Check the coolant level of coolant in the expansion tank (Figure 50).

   The coolant level should be at or above the mark on the side of the tank.

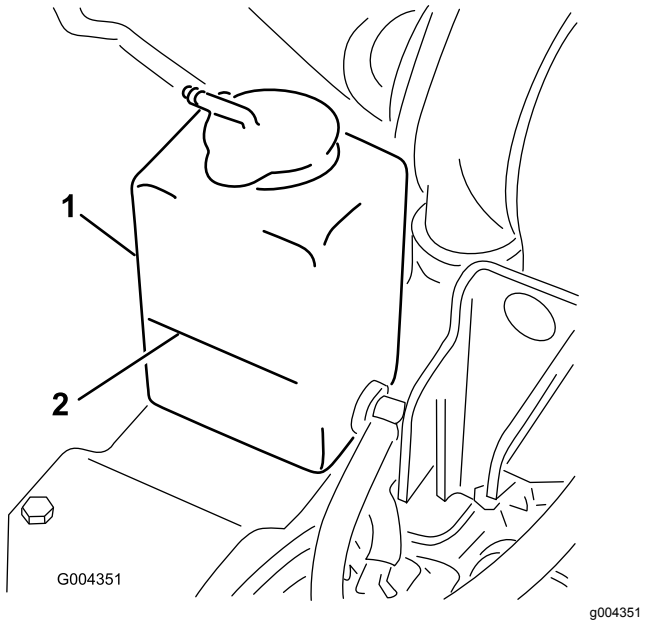


**Figure 50**

1. Expansion tank
2. Full mark

4. If the coolant level is low, complete the following procedure:

   A. Remove the coolant-fill cap (Figure 51).

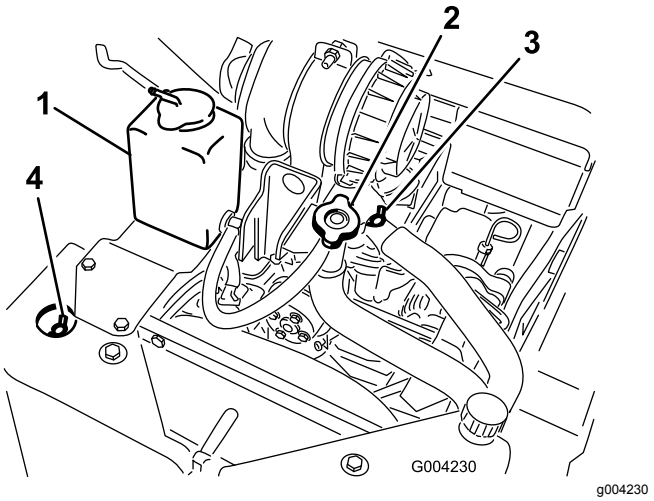


**Figure 51**

1. Expansion tank
2. Coolant-fill cap and filler neck
3. Top coolant-bleed valve
4. Front coolant-bleed valve

B. Open the front and top coolant-bleed valves (Figure 51).

C. Pour coolant into the coolant-filler neck until the coolant begins to come out of the front coolant-bleed valve (Figure 51).

D. Close the front coolant-bleed valve (Figure 51).

E. Pour coolant into the coolant-filler neck until the coolant begins to come out of the top coolant-bleed valve (Figure 51).

F. Close the top coolant-bleed valve (Figure 51).

G. Pour coolant into the coolant-filler neck until the coolant level comes into the filler neck (Figure 51).

H. Install the coolant-fill cap (Figure 51).

I. Add coolant into the expansion tank until it reaches the Full mark on the side of the tank (Figure 50).

5. Install the expansion tank cap.

## Changing the Engine Coolant

**Service Interval:** Yearly

Have an Authorized Service Dealer change the engine coolant yearly.

If you need to add engine coolant, refer to Checking, Adding, and Bleeding the Engine Coolant (page 38).

# *Brake Maintenance*

## Testing the Parking Brake

**Service Interval:** Before each use or daily

1. Engage the parking-brake; refer to Parking-Brake Lever (page 12).
2. Start the engine.
3. Slowly attempt to drive the machine forward or rearward.

   **Note:** The machine may roll slightly before the brakes engage in the drive sprocket.
4. If the brakes do not hold the machine after the initial slight movement, contact your Authorized Service Dealer for service.

# Belt Maintenance

## Checking the Condition of the Hydraulic Pump Belt

**Service Interval:** Yearly

Check the condition of the hydraulic pump belt (Figure 52) yearly. Have an Authorized Service Dealer replace it if it becomes damaged or worn.

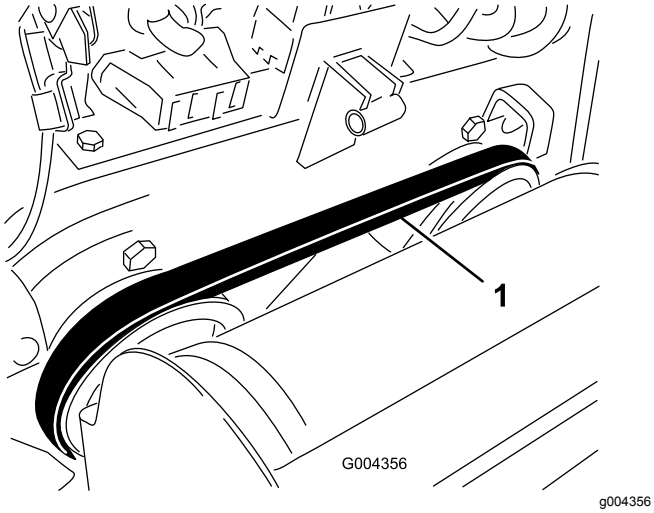


**Figure 52**

1. Hydraulic pump belt

# Controls System Maintenance

## Adjusting the Controls

The factory adjusts the controls before shipping the machine. However, after many hours of use, you may need to adjust the traction control alignment, the NEUTRAL position of the traction control, and the tracking of the traction control in the full forward position.

***Important:*** **To adjust the controls properly, complete each procedure in the order listed.**

### Adjusting the Traction Control Alignment

If the traction control bar does not rest flush and square with the reference bar when in the full backward position, immediately complete the following procedure:

1. Park the machine on a level surface, engage the parking brake, and lower the loader arms.
2. Shut off the engine and remove the key.
3. Pull straight back on the traction control so the front of the control contacts the reference bar (Figure 53).

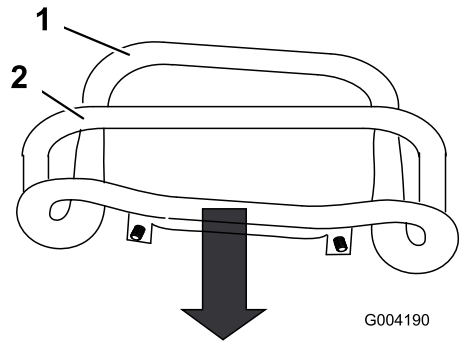


**Figure 53**

1. Front of the control (out of alignment)
2. Reference bar

4. If the front of the traction control does not rest square and flush with the reference bar, loosen the flange nut and bolt in the stem of the traction control (Figure 54).

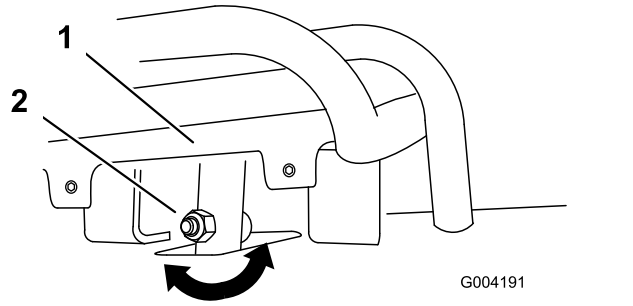


**Figure 54**

1. Traction control
2. Stem, bolt, and nut

5. Adjust the traction control so that it rests flush against the reference bar when you pull it straight back (Figure 54 and Figure 55).

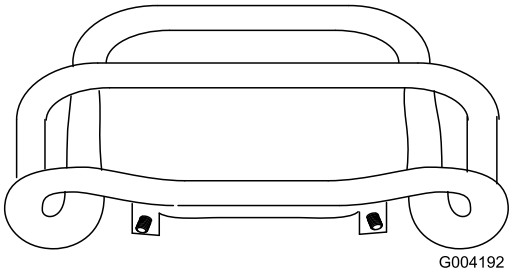


**Figure 55**

6. Tighten the flange nut and bolt in the traction control stem.

## Adjusting the Traction Control Neutral Position

If the machine creeps forward or backward when the traction control is in the NEUTRAL position and the unit is warm, immediately complete the following procedure:

1. Lift/support the machine so that both tracks are off the ground.
2. Open the rear-access cover.
3. Loosen the jam nuts on the traction rods, under the control panel (Figure 56).

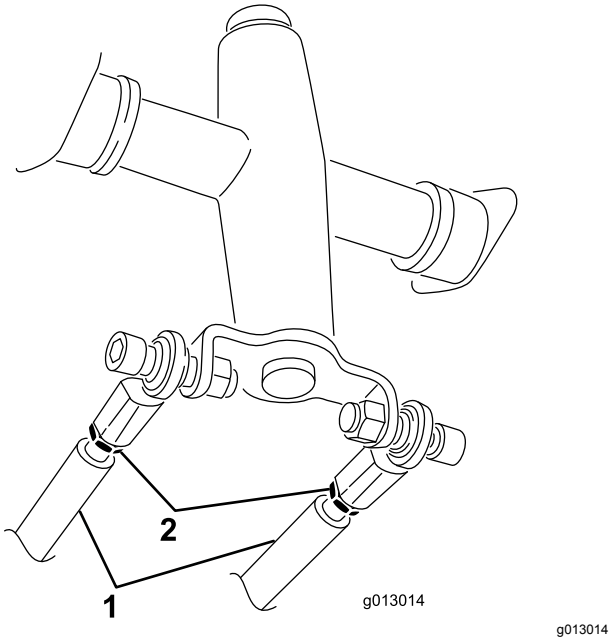


**Figure 56**

1. Traction rod
2. Jam nut

4. Start the traction unit and set the throttle to about 1/3 open position.

**⚠ WARNING**

**When the machine is running, you could be caught and injured in moving parts or burned on hot surfaces.**

**Stay away from pinch points, moving parts, and hot surfaces when adjusting the running machine.**

5. If the **left** track moves, lengthen or shorten the **right** traction rod until the track stops moving.
6. If the **right** track moves, lengthen or shorten the **left** traction rod until the track stops moving.
7. Tighten the jam nuts.
8. Close the rear-access cover.
9. Shut off the engine and lower the machine to the ground.
10. Drive the machine in full reverse, checking to see if the unit tracks straight. If it does not, note the direction it veers. Repeat the adjustment previously described so that it tracks straight in reverse.

## Adjusting the Tracking of the Traction Control, Full Forward Position

If the machine does not drive straight when you hold the traction control against the reference bar, complete the following procedure:

1. Drive the machine with the traction control against the reference bar, noting which direction the traction unit veers.
2. Release the traction control.
3. If the traction unit veers to the **left**, loosen the **right** jam nut and adjust the tracking set screw on the front of the traction control (Figure 57).
4. If the traction unit veers to the **right**, loosen the **left** jam nut and adjust the tracking set screw on the front of the traction control (Figure 57).

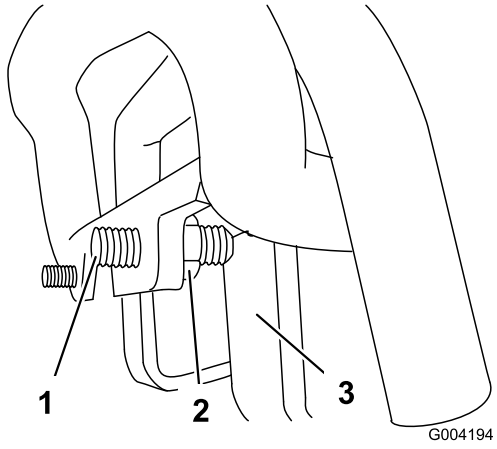


g004194

**Figure 57**

1. Set screw
2. Jam nut
3. Stop

5. Repeat steps 1 through 4 until the machine drives straight in the full forward position.

   ***Important:*** **Ensure that the tracking set screws touch the stops in the full forward position to avoid over stroking the hydraulic pumps.**

# *Hydraulic System Maintenance*

## Hydraulic System Safety

- Seek immediate medical attention if fluid is injected into skin. Injected fluid must be surgically removed within a few hours by a doctor.
- Ensure that all hydraulic-fluid hoses and lines are in good condition and all hydraulic connections and fittings are tight before applying pressure to the hydraulic system.
- Keep your body and hands away from pinhole leaks or nozzles that eject high-pressure hydraulic fluid.
- Use cardboard or paper to find hydraulic leaks.
- Safely relieve all pressure in the hydraulic system before performing any work on the hydraulic system.

## Relieving Hydraulic Pressure

To relieve hydraulic pressure while the engine is on, disengage the auxiliary hydraulics and fully lower the loader arms.

To relieve the pressure while the engine is off, move the auxiliary-hydraulics lever between the forward and reverse flow positions to relieve auxiliary hydraulic pressure, and cycle the loader-arm/attachment-tilt lever between the forward positions to lower the loader arms (Figure 58).

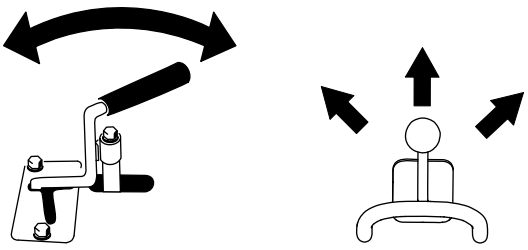

g280733

**Figure 58**

# Hydraulic Fluid Specifications

**Hydraulic-Tank Capacity:** 45 L (12 US gallons)

Use only 1 of the following fluids in the hydraulic system:

- **Toro Premium Transmission/Hydraulic Tractor Fluid** (refer to your Authorized Toro Dealer for more information)
- **Toro PX Extended Life Hydraulic Fluid** (refer to your Authorized Toro Dealer for more information)
- If either of the above Toro fluids are not available, you may use another **Universal Tractor Hydraulic Fluid (UTHF)**, but they must be only **conventional, petroleum-based** products. The specifications must fall within the listed range for all the following material properties and the fluid should meet the listed industry standards. Check with your hydraulic fluid supplier to determine if the fluid meets these specifications.

  **Note:** Toro will not assume responsibility for damage caused by improper substitutions, so use only products from reputable manufacturers who will stand behind their recommendations.

| **Material Properties** | |
|---|---|
| Viscosity, ASTM D445 | cSt at 40°C: 55 to 62 |
| | cSt at 100°C: 9.1 to 9.8 |
| Viscosity index, ASTM D2270 | 140 to 152 |
| Pour Point, ASTM D97 | -37 to -43°C (-35 to -46°F) |
| **Industry Standards** | |
| API GL-4, AGCO Powerfluid 821 XL, Ford New Holland FNHA-2-C-201.00, Kubota UDT, John Deere J20C, Vickers 35VQ25 and Volvo WB-101/BM | |

**Note:** Many hydraulic fluids are almost colorless, making it difficult to spot leaks. A red dye additive for the hydraulic system fluid is available in 20 ml (2/3 fl oz) bottles. One bottle is sufficient for 15 to 22 L (4 to 6 US gallons) of hydraulic fluid. Order Part No. 44-2500 from your Authorized Service Dealer.

# Checking the Hydraulic-Fluid Level

**Service Interval:** Every 25 hours

***Important:*** **Always use the correct hydraulic fluid. Unspecified fluids will damage the hydraulic system. Refer to Hydraulic Fluid Specifications (page 43).**

1. Remove any attachments.
2. Park the machine on a level surface, lower the loader arms, and fully retract the tilt cylinder.
3. Shut off the engine, remove the key, and allow the engine to cool.
4. Open the hood.
5. Clean the area around the filler neck of the hydraulic tank (Figure 59).

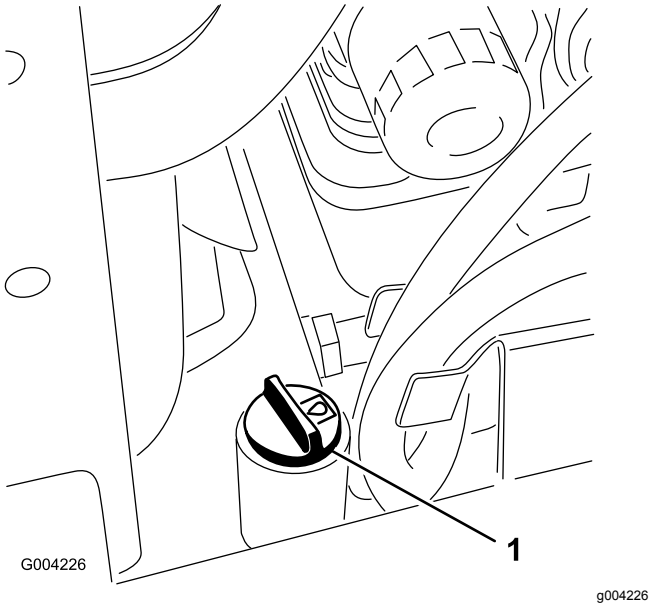


**Figure 59**

1. Filler-neck cap

6. Remove the filler-neck cap and check the fluid level on the dipstick (Figure 60).

   **Note:** The fluid level should be between the marks on the dipstick.

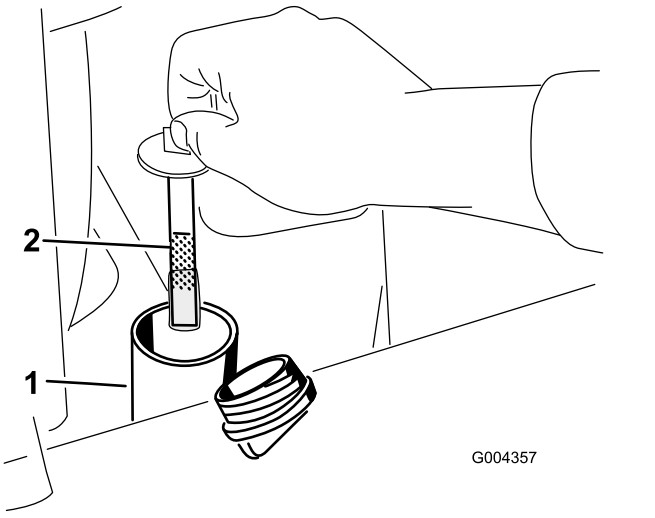


**Figure 60**

1. Filler neck
2. Dipstick

7. If the level is low, add enough fluid to raise it to the proper level.
8. Install the filler-neck cap.
9. Close the hood.

# Replacing the Hydraulic Filter

**Service Interval:** After the first 8 hours

Every 200 hours

***Important:*** **Do not substitute an automotive oil filter; otherwise, severe hydraulic system damage may result.**

1. Park the machine on a level surface, engage the parking brake, and lower the loader arms.
2. Shut off the engine and remove the key.
3. Open the rear access cover.
4. Place a drain pan under the filter (Figure 61).

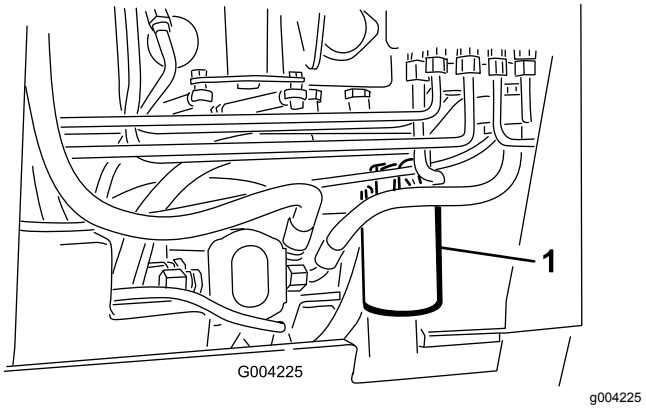


**Figure 61**

1. Hydraulic filter

5. Remove the old filter (Figure 61) and wipe the surface of the filter adapter gasket clean.
6. Apply a thin coat hydraulic fluid to the rubber gasket on the replacement filter.
7. Install the replacement hydraulic filter onto the filter adapter (Figure 61). Tighten it clockwise until the rubber gasket contacts the filter adapter, then tighten the filter an additional 3/4 turn.
8. Clean up any spilled fluid.
9. Start the engine and let it run for about 2 minutes to purge air from the system.
10. Shut off the engine, remove the key, and check for leaks.
11. Check the fluid level in the hydraulic tank and add fluid to raise the level to the mark on dipstick; refer to Checking the Hydraulic-Fluid Level (page 43).

    ***Important:*** **Do not overfill the tank.**
12. Close the rear-access cover.

# Changing the Hydraulic Fluid

**Service Interval:** Every 400 hours/Yearly (whichever comes first)

1. Park the machine on a level surface.
2. Raise the loader arms and install the cylinder lock.
3. Shut off the engine, remove the key, and allow the engine to cool.
4. Open the hood.
5. Remove the hydraulic-tank cap and dipstick (Figure 62).

   **Note:** The filler cap is behind the front screen. If you want to improve your access to it, remove the screen.

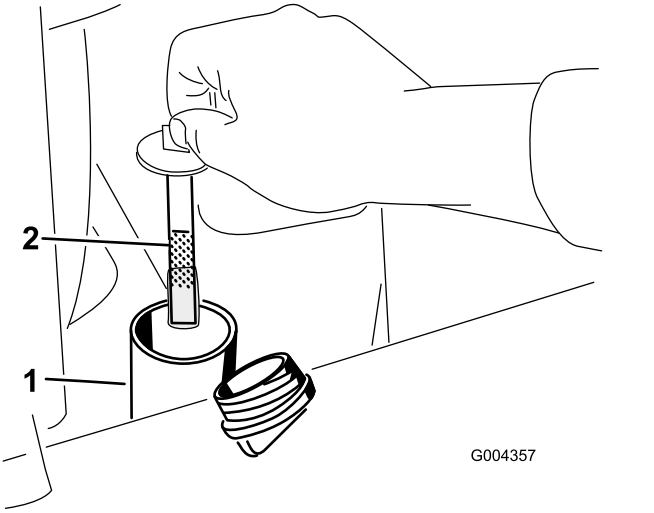


**Figure 62**

1. Filler neck
2. Dip stick

6. Place a large drain pain capable of holding 57 L (15 US gallons) under the drain plug on the front of the machine (Figure 63).

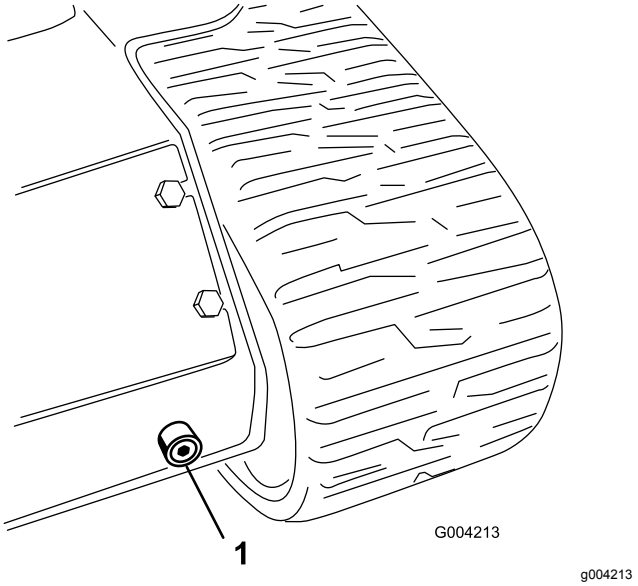


**Figure 63**

1. Drain plug

7. Remove the drain plug and allow the oil to drain into the pan (Figure 63).
8. When finished, install and tighten the drain plug.

   **Note:** Dispose of the used oil at a certified recycling center.
9. Fill the hydraulic tank with hydraulic fluid as specified in Hydraulic Fluid Specifications (page 43).
10. Start the engine and let it run for a few minutes.
11. Shut off the engine.
12. Check the hydraulic-fluid level and add fluid to fill the tank if necessary; refer to Checking the Hydraulic-Fluid Level (page 43).
13. Close the hood.

# *Cleaning*

## Removing Debris

**Service Interval:** Before each use or daily

***Important:*** **Operating the engine with blocked screens and/or cooling shrouds removed will result in engine damage from overheating.**

1. Park the machine on a level surface and lower the loader arms.
2. Shut off the engine, remove the key, and allow the engine to cool.
3. Open the hood and secure the prop rod.
4. Clean any debris from the front and side screens.
5. Wipe away debris from the air cleaner.
6. Clean any debris buildup on the engine and in the oil cooler fins with a brush or blower.

   ***Important:*** **Operating the engine with blocked screens and/or cooling shrouds removed will result in engine damage due to overheating.**
7. Clean debris from the hood opening, muffler, heat shields, and radiator screen (if applicable).
8. Close the hood.

## Cleaning the Chassis

**Service Interval:** Every 100 hours—Check for dirt buildup in the chassis.

Using a flashlight, open the hood and inspect the area under the engine regularly. When the debris is 1 to 2 inches deep, have an Authorized Service Dealer remove the rear of the machine, fuel tank, and battery, and flush the chassis clean.

# Storage

## Storage Safety

- Shut off the engine, remove the key, wait for all moving parts to stop, and allow the machine to cool before storing it.
- Do not store the machine or fuel near flames.

## Storage

1. Park the machine on a level surface, engage the parking brake, and lower the loader arms.
2. Shut off the engine and remove the key.
3. Remove dirt and grime from the entire machine.

   ***Important:*** **You can wash the machine with mild detergent and water. Do not pressure wash the machine. Avoid excessive use of water, especially near the control panel, engine, hydraulic pumps, and motors.**
4. Service the air cleaner; refer to Servicing the Air Cleaner (page 26).
5. Grease the machine; refer to Greasing the Machine (page 26).
6. Change the engine oil; refer to Changing the Engine Oil (page 28).
7. Charge the battery; refer to Charging the Battery (page 32).
8. Check and adjust the track tension; refer to Adjusting the Track Tension (page 35).
9. Check and tighten all bolts, nuts, and screws. Repair or replace any part that is damaged.
10. Paint all scratched or bare metal surfaces. Paint is available from your Authorized Service Dealer.
11. Store the machine in a clean, dry garage or storage area. Remove the key from the ignition switch and keep it in a memorable place.
12. Cover the machine to protect it and keep it clean.

# Troubleshooting

| Problem | Possible Cause | Corrective Action |
|---|---|---|
| The starter does not crank. | 1. The electrical connections are corroded or loose. | 1. Check the electrical connections for good contact. |
| | 2. A fuse is loose or blown. | 2. Connect or replace the fuse. |
| | 3. The battery is discharged. | 3. Charge the battery or replace it. |
| | 4. The relay or switch is damaged. | 4. Contact your Authorized Service Dealer. |
| | 5. A starter or starter solenoid is damaged. | 5. Contact your Authorized Service Dealer. |
| | 6. Internal engine components have seized. | 6. Contact your Authorized Service Dealer. |
| The engine cranks but does not start. | 1. The starting procedure is incorrect. | 1. Use the correct starting procedure. |
| | 2. The fuel tank is empty. | 2. Fill the tank with fresh fuel. |
| | 3. The fuel-shutoff valve is closed. | 3. Open the fuel-shutoff valve. |
| | 4. Dirt, water, stale fuel, or incorrect fuel is in the fuel system. | 4. Drain and flush the fuel system; add fresh fuel. |
| | 5. The fuel line is clogged. | 5. Clean or replace the fuel line. |
| | 6. There is air in the fuel. | 6. Bleed the nozzles and check for air leaks at the fuel hose connections and fittings between the fuel tank and engine. |
| | 7. The glow plugs are inoperative. | 7. Check the fuse, glow plugs, and wiring. |
| | 8. The cranking speed is slow. | 8. Check the battery, oil viscosity, and starting motor (contact your Authorized Service Dealer). |
| | 9. The air-cleaner filter is dirty. | 9. Service the air filter. |
| | 10. The fuel filter is clogged. | 10. Replace the fuel filter. |
| | 11. The improper fuel grade for cold weather is in the machine. | 11. Drain the fuel system and replace the fuel filter. Add fresh fuel of proper grade for ambient temperature conditions. You may need to warm the entire traction unit. |
| | 12. There is low compression. | 12. Contact your Authorized Service Dealer. |
| | 13. The injection nozzles are damaged. | 13. Contact your Authorized Service Dealer. |
| | 14. The injection pump timing is incorrect. | 14. Contact your Authorized Service Dealer. |
| | 15. The injection pump is damaged. | 15. Contact your Authorized Service Dealer. |
| | 16. The ETR solenoid is damaged. | 16. Contact your Authorized Service Dealer. |

| Problem | Possible Cause | Corrective Action |
|---|---|---|
| The engine starts but does not keep running. | 1. The fuel-tank vent is restricted. | 1. Loosen the cap. If the engine runs with the cap loosened, replace the cap. |
| | 2. Dirt or water is in the fuel system. | 2. Drain and flush the fuel system; add fresh fuel. |
| | 3. The fuel filter is clogged. | 3. Replace the fuel filter. |
| | 4. There is air in the fuel. | 4. Bleed the nozzles and check for air leaks at fuel hose connections and fittings between the fuel tank and engine. |
| | 5. Improper fuel grade for cold weather was used in the machine. | 5. Drain the fuel system and replace the fuel filter. Add fresh fuel of proper grade for ambient temperature conditions. |
| | 6. The spark-arrestor screen is clogged. | 6. Clean or replace the spark-arrestor screen. |
| | 7. The fuel pump is damaged. | 7. Contact your Authorized Service Dealer. |
| The engine runs but knocks or misses. | 1. Dirt, water, stale fuel, or incorrect fuel is in the fuel system. | 1. Drain and flush the fuel system; add fresh fuel. |
| | 2. The engine is overheating. | 2. Refer to “The engine overheats.” |
| | 3. There is air in the fuel. | 3. Bleed the nozzles and check for air leaks at the fuel hose connections and fittings between the fuel tank and engine. |
| | 4. The injection nozzles are damaged. | 4. Contact your Authorized Service Dealer. |
| | 5. There is low compression | 5. Contact your Authorized Service Dealer. |
| | 6. The injection-pump timing is incorrect. | 6. Contact your Authorized Service Dealer. |
| | 7. There is excessive carbon buildup. | 7. Contact your Authorized Service Dealer. |
| | 8. There is internal wear or damage. | 8. Contact your Authorized Service Dealer. |
| The engine does not idle. | 1. The fuel-tank vent is restricted. | 1. Loosen the cap. If the engine runs with the cap loosened, replace the cap. |
| | 2. Dirt, water, stale fuel, or incorrect fuel is in the fuel system. | 2. Drain and flush the fuel system; add fresh fuel. |
| | 3. The air-cleaner filters are dirty. | 3. Service the air filters. |
| | 4. The fuel filter is clogged. | 4. Replace the fuel filter. |
| | 5. There is air in the fuel. | 5. Bleed the nozzles and check for air leaks at fuel hose connections and fittings between the fuel tank and engine. |
| | 6. The fuel pump is damaged. | 6. Contact your Authorized Service Dealer. |
| | 7. There is low compression | 7. Contact your Authorized Service Dealer. |

| Problem | Possible Cause | Corrective Action |
|---|---|---|
| The engine overheats. | 1. More coolant is needed. | 1. Check and add coolant. |
| | 2. There is restricted air flow to the radiator. | 2. Inspect and clean the radiator screen with every use. |
| | 3. The crankcase-oil level is incorrect. | 3. Fill or drain to the Full mark. |
| | 4. The engine load is excessive. | 4. Reduce the load; use a lower ground speed. |
| | 5. Incorrect fuel is in the fuel system. | 5. Drain and flush the fuel system; add fresh fuel. |
| | 6. The thermostat is damaged. | 6. Contact your Authorized Service Dealer. |
| | 7. The fan belt is loose or broken. | 7. Contact your Authorized Service Dealer. |
| | 8. Injection timing is incorrect. | 8. Contact your Authorized Service Dealer. |
| | 9. The coolant pump is damaged. | 9. Contact your Authorized Service Dealer. |
| | 10. The engine rpm is too low. | 10. Check the high idle speed. |
| The engine loses power. | 1. The engine load is excessive. | 1. Reduce the load; use a lower ground speed. |
| | 2. The crankcase-oil level is incorrect. | 2. Fill or drain to the Full mark. |
| | 3. The air-cleaner filters are dirty. | 3. Service the air filters. |
| | 4. Dirt, water, stale fuel, or incorrect fuel is in the fuel system. | 4. Drain and flush the fuel system; add fresh fuel. |
| | 5. The engine is overheating. | 5. Refer to “The engine overheats.” |
| | 6. The spark-arrestor screen is clogged. | 6. Clean or replace the spark-arrestor screen. |
| | 7. There is air in the fuel. | 7. Bleed the nozzles and check for air leaks at fuel hose connections and fittings between the fuel tank and engine. |
| | 8. There is low compression | 8. Contact your Authorized Service Dealer. |
| | 9. The fuel-tank vent is restricted. | 9. Contact your Authorized Service Dealer. |
| | 10. The injection-pump timing is incorrect. | 10. Contact your Authorized Service Dealer. |
| | 11. The injection pump is damaged. | 11. Contact your Authorized Service Dealer. |
| | 12. The engine high idle speed is too low. | 12. Contact your Authorized Service Dealer. |
| Exhaust produces excessive black smoke. | 1. The engine load is excessive. | 1. Reduce the load; use a lower ground speed. |
| | 2. The air-cleaner filters are dirty. | 2. Service the air filters. |
| | 3. Incorrect fuel is in the fuel system. | 3. Drain and flush the fuel system; add fresh fuel. |
| | 4. The injection-pump timing is incorrect. | 4. Contact your Authorized Service Dealer. |
| | 5. The injection pump is damaged. | 5. Contact your Authorized Service Dealer. |
| | 6. The injection nozzles are damaged. | 6. Contact your Authorized Service Dealer. |

| Problem | Possible Cause | Corrective Action |
|---|---|---|
| Exhaust produces excessive white smoke. | 1. The key was turned to the START position before the glow-plug light turned off. | 1. Turn the key to the RUN position and allow the glow-plug light to turn off before starting the engine. |
| | 2. The engine temperature is low. | 2. Check the thermostat. |
| | 3. The glow plugs are inoperative. | 3. Check the fuse, glow plugs and wiring. |
| | 4. The injection-pump timing is incorrect. | 4. Contact your Authorized Service Dealer. |
| | 5. The injection nozzles are damaged. | 5. Contact your Authorized Service Dealer. |
| | 6. There is low compression. | 6. Contact your Authorized Service Dealer. |
| The machine does not drive. | 1. The parking brake is engaged. | 1. Disengage the parking brake. |
| | 2. The hydraulic-fluid level is low. | 2. Add hydraulic fluid to the reservoir. |
| | 3. The hydraulic system is damaged. | 3. Contact your Authorized Service Dealer. |
| | 4. The tow valves are open. | 4. Close the tow valves. |
| | 5. The flow-divider valve lever is in 9 o'clock position. | 5. Move the lever to the 12 o'clock to 10 o'clock position. |
| | 6. A traction pump drive coupler is loose or broken. | 6. Contact your Authorized Service Dealer. |
| | 7. Pump and/or wheel motor is damaged. | 7. Contact your Authorized Service Dealer. |
| | 8. The control valve is damaged. | 8. Contact your Authorized Service Dealer. |
| | 9. The relief valve is damaged. | 9. Contact your Authorized Service Dealer. |

## European Privacy Notice

The Information Toro Collects
Toro Warranty Company (Toro) respects your privacy. In order to process your warranty claim and contact you in the event of a product recall, we ask you to share certain personal information with us, either directly or through your local Toro company or dealer.

The Toro warranty system is hosted on servers located within the United States where privacy law may not provide the same protection as applies in your country.

BY SHARING YOUR PERSONAL INFORMATION WITH US, YOU ARE CONSENTING TO THE PROCESSING OF YOUR PERSONAL INFORMATION AS DESCRIBED IN THIS PRIVACY NOTICE.

The Way Toro Uses Information
Toro may use your personal information to process warranty claims, to contact you in the event of a product recall and for any other purpose which we tell you about. Toro may share your information with Toro's affiliates, dealers or other business partners in connection with any of these activities. We will not sell your personal information to any other company. We reserve the right to disclose personal information in order to comply with applicable laws and with requests by the appropriate authorities, to operate our systems properly or for our own protection or that of other users.

Retention of your Personal Information
We will keep your personal information as long as we need it for the purposes for which it was originally collected or for other legitimate purposes (such as regulatory compliance), or as required by applicable law.

Toro's Commitment to Security of Your Personal Information
We take reasonable precautions in order to protect the security of your personal information. We also take steps to maintain the accuracy and current status of personal information.

Access and Correction of your Personal Information
If you would like to review or correct your personal information, please contact us by email at legal@toro.com.

## Australian Consumer Law

Australian customers will find details relating to the Australian Consumer Law either inside the box or at your local Toro Dealer.

# California Proposition 65 Warning Information

## What is this warning?

You may see a product for sale that has a warning label like the following:



**WARNING:** Cancer and Reproductive Harm—www.p65Warnings.ca.gov.

## What is Prop 65?

Prop 65 applies to any company operating in California, selling products in California, or manufacturing products that may be sold in or brought into California. It mandates that the Governor of California maintain and publish a list of chemicals known to cause cancer, birth defects, and/or other reproductive harm. The list, which is updated annually, includes hundreds of chemicals found in many everyday items. The purpose of Prop 65 is to inform the public about exposure to these chemicals.

Prop 65 does not ban the sale of products containing these chemicals but instead requires warnings on any product, product packaging, or literature with the product. Moreover, a Prop 65 warning does not mean that a product is in violation of any product safety standards or requirements. In fact, the California government has clarified that a Prop 65 warning "is not the same as a regulatory decision that a product is 'safe' or 'unsafe.'" Many of these chemicals have been used in everyday products for years without documented harm. For more information, go to https://oag.ca.gov/prop65/faqs-view-all.

A Prop 65 warning means that a company has either (1) evaluated the exposure and has concluded that it exceeds the "no significant risk level"; or (2) has chosen to provide a warning based on its understanding about the presence of a listed chemical without attempting to evaluate the exposure.

## Does this law apply everywhere?

Prop 65 warnings are required under California law only. These warnings are seen throughout California in a wide range of settings, including but not limited to restaurants, grocery stores, hotels, schools, and hospitals, and on a wide variety of products. Additionally, some online and mail order retailers provide Prop 65 warnings on their websites or in catalogs.

## How do the California warnings compare to federal limits?

Prop 65 standards are often more stringent than federal and international standards. There are various substances that require a Prop 65 warning at levels that are far lower than federal action limits. For example, the Prop 65 standard for warnings for lead is 0.5 µg/day, which is well below the federal and international standards.

## Why don't all similar products carry the warning?

- Products sold in California require Prop 65 labelling while similar products sold elsewhere do not.
- A company involved in a Prop 65 lawsuit reaching a settlement may be required to use Prop 65 warnings for its products, but other companies making similar products may have no such requirement.
- The enforcement of Prop 65 is inconsistent.
- Companies may elect not to provide warnings because they conclude that they are not required to do so under Prop 65; a lack of warnings for a product does not mean that the product is free of listed chemicals at similar levels.

## Why does Toro include this warning?

Toro has chosen to provide consumers with as much information as possible so that they can make informed decisions about the products they buy and use. Toro provides warnings in certain cases based on its knowledge of the presence of one or more listed chemicals without evaluating the level of exposure, as not all the listed chemicals provide exposure limit requirements. While the exposure from Toro products may be negligible or well within the "no significant risk" range, out of an abundance of caution, Toro has elected to provide the Prop 65 warnings. Moreover, if Toro does not provide these warnings, it could be sued by the State of California or by private parties seeking to enforce Prop 65 and subject to substantial penalties.